ORDER NO. VSD9903M901A

D20

Service Manual

DVCPRO Studio VTR

AJ-D850P/E

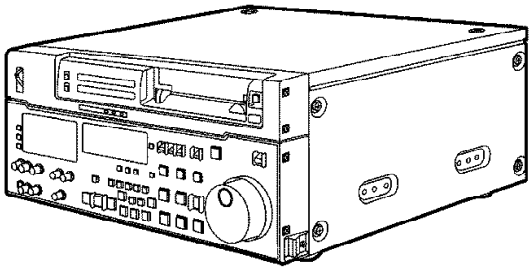

SPECIFICATIONS

Specification

© 1999 Matsushita Electric Industrial Co., Ltd. All rights reserved.
Unauthorized copying and distribution is a violation of law.

⚠ WARNING

This service information is designed for experienced repair technicians only and is not designed for use by the general public. It does not contain warnings or cautions to advise non-technical individuals of potential dangers in attempting to service a product. Products powered by electricity should be serviced or repaired only by experienced professional technicians. Any attempt to service or repair the product or products dealt with in this service information by anyone else could result in serious injury or death.

Panasonic

SAFETY PRECAUTIONS

1. Operating Instructions

AJ-D850P

AJ-D850E

2. SERVICE INFORMATION

2.1. ERROR RATE CONFIRMATION PROCEDURE

2.1.1. Function of Front Switch

2.1.1.1. Front Panel Bottom side

DIP SW	ON	OFF
SW1-1	● SERVICE mode (SERVICE MENU display) ● SW1-2 to 1-4 Valid	● NORMAL mode (SET UP MENU display) ● SW1-2 to 1-4 Invalid
SW1-2	Error Rate Display Mode: SLOW	Error Rate Display Mode: FAST
SW1-3	Force R/P Head Playback	Force PB Head Playback
SW1-4	VITABI Decode ON	VITABI Decode OFF

Note:

In case of DIP SW1-1 is ON, SW1-2,1-3 and 1-4 becomes valid.

2.1.1.2. Front Panel Bottom section

	4F	2F
CF SW	Error Rate is display	Error Rate is not display

	ON	OFF
SYNCHRONIZE SW	Conceal OFF	Conceal ON

Note:

In case of DIP SW1-1 is ON, above switches change the function as indicated as above table.

2.1.1.3. TC MODE SW (TC/CTL switch and TC/UB switch on the Front Panel

Inner and Outer correction are set by combination of TC/CTL and TC/UB switches setting.

MODE	INNER Correction	OUTER Correction
CTL	OFF	OFF
TC	ON	OFF
UB	ON	ON

Note:

In case of DIP SW1-1 is ON, above switches change the function as indicated as above table.

2.1.1.4. Correspond to Service Menu of Front Switches

The Menu function in the RF ADJUST menu and Front switches are correspond as follows.

DIP SW1 (Front Panel Bottom side)

DIP SW	MENU No.	Item
SW1-2	B28	ERROR MODE
SW1-3	B27	PB MODE
SW1-4	B26	VITERBI MODE

(Front Panel Bottom section)

	MENU No.	Item
SYNCHRONIZE SW	B25	CONCEAL MODE

TC MODE SW (TC/CTL switch and TC/UB switch on the Front Panel)

MODE	MENU No.	Item
CTL, TC, UB	B24	ECC MODE

Note:

Setting of Service Menu have priority to setting of Front Switches, when the Service Menu is open.

2.1.2. Condition of Error Rate display

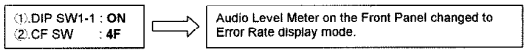

The Level Meter indicated as level of Error Rate, Audio CH1(Lch), Audio CH2(Rch), Video CH1(Lch) and Video CH2(Rch).

The Video and Audio Error Rate displayed on Level Meter as indicated as below figure.(front view at meter).

2.1.3. Specification of Error Rate

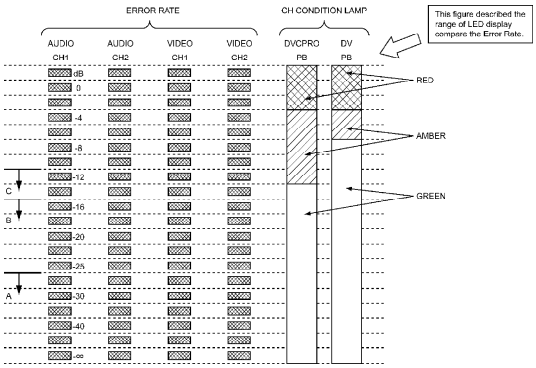

When confirm the Error Rate, please refer to specification of Error Rate as indicated as below, it level follow the menu setting as indicated as below table.

Menu setting

Item of the MENU	DVCPRO	DV
B28 : ERROR MODE	FAST	FAST
B27 : PB MODE	PB H	RP H
B26 : VITERBI MODE	ON	ON
B25 : CONCEAL MODE	ON	ON
B24 : ECC MODE	AL OFF	AL OFF

Note:

Upper side table described setting by Service Menu.

Those setting can be set by Front SW as described as previous page.

Specification of Error Rate

	VTR mode	S
DVCPRO (PB)	DVCPRO (PB Head) alignment tape playback	Under the ‘
DV (R/P)	DV (RP Head) Alignment tape playback	Under the ‘
DVCPRO (Confi)	DVCPRO confidence playback (REC mode)	Under the ‘

2.2. Service Menu Information

< Operation Procedure >

1. **The “REMOTE/LOCAL” switch set to “LOCAL” on the front panel.**
2. **Set the Dip SW 1-1 to ON position on the bottom side of front panel.**
3. **Press the MENU button on the front panel, then appeared Main menu of Service menu on the screen as indicated as below.**

```
            SERVICE-MENU
               No. A00

  * A00   :   SERVO ADJUST
    B00   :   EQ ADJUST
    C00   :   RF ADJUST
    D00   :   VIDEO ADJUST
    E00   :   AUDIO ADJUST
    H00   :   OTHER ADJUST
    END
```

4. **Move the star mark “ * ” by Search Dial to select the each Adjustment menu.**
5. **Press the SET button, then open the Adjustment Menu follow the selected item (A00 to H00) on the Main menu.**
6. **Each Adjustment item are selected by Search Dial.**
7. **For change the value or setting, holding the Search button while rotate the Search Dial.(same way of SET UP menu).**

<KEY function for Service Menu>
[MENU button] :

1. **Move to Main menu on Service menu from SET UP menu.**
2. **Move to Main menu from ADJUST menu on the Service menu**
3. **Move to SET UP menu from Main menu on Service menu.**

[SET button] :

1. Move to ADJUST menu from Main menu on Service menu.

[SERACH DIAL] :

1. Move the cursor " * " for select the each item.

2. Change the numerical value or setting of each item on ADJUST menu.

(Increase adjustment value by turn Search Dial to clockwise and decrease adjustment value by turn Search Dial to counter-clockwise.)
[SEARCH button]

1. For change the numerical value or setting value, holding this button while rotate the Search Dial.

< Store the adjustment and setting value to the memory >
When menu is escape from Adjustment menu to Main menu by press MENU button, each data write to the memory.
The contents of each "Adjustment menu" which are described on behind page.
Press the MENU button on the Main menu condition, then escape from Service menu mode.
A00:SERVO ADJUST

No.	ITEM	SETTING VALUE	CONTENTS OF SETTING and ADJUSTMEN
A01	PG SHIFTER	0~1649~4095 0~1649~4095	(RISE display) PG SHIFTER AUTO ADJ (FALL display).
A02	T TORQUE	-128~0~+127 Initial:0	Correct the offset value of T REEL MOTER DRIVE
A03	S TORQUE	-128~0~+127 Initial:0	Correct the offset value of S REEL MOTER DRIVE
A04	PB GAIN P	-128~1~+127	LISTA SENSITIVITY Adj.(PB HEAD)
A05	PB LINEAR P	0 1 ON	LISTA LINEARITY Adj. (PB HEAD)
A06	RP GAIN P	-128~1~+127	LISTA SENSITIVITY Adj. (R/P HEAD)
A07	RP LINEAR P	0 1 ON	LISTA LINEARITY Adj. (R/P HEAD)
A08	RP GAIN	-128~1~+127	LISTA CONSUMER DV COMPATIBILITY CONFIRM
A09	RP LINEAR	0 1 ON	LISTA CONSUMER DV LINEARITY Adj.
A10	MOTOR CHECK	0 OFF 1 CAP 2 DRUM 3 T REEL 4 S REEL	

B00:EQ ADJUST
Note: The mark " * " indicated as common adjustment item for DVCPRO and DV.

NO	ITEM	SETTING VALUE	CONTENTS OF SETTING and ADJUSTMENT
B01	PB PLL PHASE	-128~-40~+127	PB PLL PHASE Adj. *
B02	PB PLL SLICE	-128~-70~+127	PB PLL SLICE LEVEL Adj. *
B03	PB AEQ	-128~+75~+127	PB AUTO EQ Adj. *
B04	PB GAIN L	-128~+30~+127	PB Lch EQ GAIN Adj. *
B05	PB PHASE L	-128~-55~+127	PB Lch EQ PHASE Adj. *
B06	PB GAIN R	-128~+30~+127	PB Rch EQ GAIN Adj. *
B07	PB PHASE R	-128~-55~+127	PB Rch EQ PHASE Adj. *
B08	RP PLL PHASE	-128~+50~+127	RP PLL PHASE Adj.
B09	RP PLL SLICE	-128~-70~+127	RP PLL SLICE LEVEL Adj.
B10	RP AEQ	-128~+75~+127	RP AUTO EQ Adj.
B11	RP GAIN L	-128~+30~+127	RP Lch EQ GAIN Adj.
B12	RP PHASE L	-128~-55~+127	RP Lch EQ PHASE Adj.
B13	RP GAIN R	-128~+30~+127	RP Rch EQ GAIN Adj.
B14	RP PHASE R	-128~-55~+127	RP Rch EQ PHASE Adj.
B15	VTB PHASE 1	-128 +127	VITABI A/D CLOCK PHASE Adj. (LSB)
B16	VTB PHASE 2	-128 +127	VITABI A/D CLOCK PHASE Adj.
B17	VTB PHASE 3	-128 +127	VITABI A/D CLOCK PHASE Adj. (MSB)
B18	VTB PHS FINE	-128~-1~+127	VITABI A/D CLOCK PHASE ADJ. (FINE Adj.)
B19	PB MAIN DL	-128~-40~+127	PB EQ DELAY LINE Adj. *
B20	RP MAIN DL	-128~-40~+127	RP EQ DELAY LINE Adj.
B21	PB PLL VCO	-128~+66~+127	PB PLL VCO Adj.
B22	RP PLL VCO	-128~+66~+127	RP PLL VCO Adj.
B23	VTB GAIN	-31~-15~+32	VITABI A/D INPUT LEVEL Adj. *
B24	ECC MODE	0 ALL ON 1 OT OFF 2 AL OFF	ERROR CORRECTION INNER ON/OUTER ON ERROR CORRECTION INNER ON/OUTER OFF ERROR CORRECTION INNER OFF/OUTER OFF
B25	CONCEAL MODE	0 ON 1 OFF	ERROR CONCEALMENT ON ERROR CONCEALEMENT OFF *This CONCEAL MODE function is only effective, v above ECC MODE set to “ALL ON”.
B26	VITABI MODE	0 AUTO 1 ON 2 OFF	VITABI ON VITABI ON VITABI OFF
B27	PB MODE	0 PB H 1 RP H	FORCED PB HEAD PLAYBACK FORCED RP HEAD PLAYBACK
B28	ERROR MODE	0 FAST 1 SLOW	ERROR DISPLAY MODE “FAST” ERROR DISPLAY MODE “SLOW”
B29	EQ AUTO ADJ	0 STOP 1 START	 PB EQUALIZER AUTO Adj.
B30	DEFAUT	0 LOAD 1 SAVE	LOAD THE FACTORY ADJUSTMENT VALUE SAVE THE ADJUSTMENT VALUE

Note:

The items (No. B24 to B28), which operated only active on the EQ ADJUST mode. And these function have priority over setting of DIP SW and Front SW as indicated as below.

1. Function of Front Switch

Front Rear DIP SW

DIPSW	ON	OFF
SW1	● Service MENU SW2~4 Valid	● SET UPMENU ● SW2~4 Invalid
SW2	Error Rate Display: SLOW	Error Rate Display: FAST
SW3	Force R/P Head Playback	Force PB Head Playback
SW4	Vitabi Decode ON	Vitabi Decode OFF

Front Bottom DISPLAY

	4F	2F
CF	Error Rate is displayed	Error Rate is not displayed.

	ON	OFF
SYNCHRONIZE	Conceal OFF	Conceal ON

Front TC MODE SW

	INNER Correction	OUTER Correction
CTL	OFF	OFF
TC	ON	OFF
UB	ON	ON

“ How to LOAD or SAVE the adjustment value ”

Note:

This item (B30) is only active on the tape pass condition.

Press the SET button , the appear the message as indicated as below.

***SAVE**

LOAD

END

Set the cursor “ * ” to SAVE or LOAD and press the SET button, then execute the program.

Note:

1. The VTR have two memory area for the adjustment value as indicated as below.

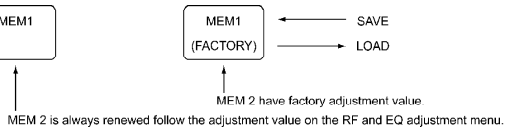

2. We recommended the SAVE function does not use or the market, because the renewed adjustment value is stored to MEM 1 automatically.

C00:RF ADJUST

NO	ITEM	SETTING VALUE	CONTENTS OF SETTING and ADJUSTMENT
C01	REC CURR L	-128~0~+127	SETTING OF REC CURR (RP Lch)
C02	REC FREQ L	-128~0~+127	SETTING OF REC FREQ (RP Lch)
C03	REC CURR R	-128~0~+127	SETTING OF REC CURR (RP Rch)
C04	REC FREQ R	-128~0~+127	SETTING OF REC FREQ (RP Rch)
C05	RE CURR L	-128~0~+127	SETTING OF ERASE CURR (RE Lch)
C06	RE CURR R	-128~0~+127	SETTING OF ERASE CURR (RE Rch)
C07	RP PHASE L	-128~0~+127	RP Lch PLAYBACK PHASE CORRECTION
C08	RP PHASE R	-128~0~+127	RP Rch PLAYBACK PHASE CORRECTION
C09	RP MAG L	-128~0~+127	RP Lch PLAYBACK OUTPUT GAIN CORRECTION
C10	RP MAG R	-128~0~+127	RP Rch PLAYBACK OUTPUT GAIN CORRECTION
C11	PB PHASE L	-128~0~+127	PB Lch PLAYBACK PHASE CORRECTION
C12	PB PHASE R	-128~0~+127	PB Rch PLAYBACK PHASE CORRECTION
C13	PB MAG L	-128~0~+127	PB Lch PLAYBACK OUTPUT GAIN CORRECTION
C14	PB MAG R	-128~0~+127	PB Rch PLAYBACK OUTPUT GAIN CORRECTION
C15	REC SIG	0 NORMAL 1 CW	SELECTION OF THE RECORDING DATA CONTINU WAVE (CW) OR NORMAL DATA
C16	ECC MODE	0 ALL ON 1 OT OFF 2 AL OFF	INNER & OUTER CORRECTION ON INNER CORRECTION ON / OUTER CORRECTION (INNER & OUTER CORRECTION OFF
C17	CONCEAL MODE	0 ON 1 OFF	CONCEAL ON CONCEAL OFF
C18	VITERBI MODE	0 AUTO 1 ON 2 OFF	VITERBI ON VITERBI ON VITERBI OFF
C19	PB MODE	0 PB H 1 RP H	PB HEAD PLAYBACK FORCIBLY RP HEAD PLAYBACK FORCIBLY
C20	ERROR MODE	0 FAST 1 SLOW	ERROR RATE INDICATION FAST ERROR RATE INDICATION SLOW
C21	TRACKING MOD	0 ATF 1 CTL	SELECTION OF TRACKING CONTROL MODE * This function is only active on the service Menu

C22	TRACKING VAL	-128~0~+127 Initial: 0	" IN CASE OF SELECT THE CTL MODE ON ABOVI C20, TRACKING VALUE IS ADJUSTABLE" * TRACKING VALUE RANGE DATA 0 - 116 : RELATIVE TO 1 TRACK THEREFORE 0 TO 127 IS RELATIVE TO JUST OVE
C23	REC OPTIMAIZ	0 STOP 1 START	SELECTION OF THE START/STOP ON AUTO REC Adj
C24	DEFAUT	0 LOAD 1 SAVE	LOAD THE FACTORY ADJUSTMENT VALUE SAVE THE ADJUSTMENT VALUE

D00:VIDEO ADJUST

NO	ITEM	SETTING VALUE	CONTENTS OF SETTING and ADJUSTMENT
D01	VIDEO BLANK	0 NORMAL 1 OFF	NORMAL : The video signal is blanked at video ed portion for protect the overshoot. OFF : Release the blanking function.
D02	V IN PLL	0 OFF 1 ON	
D03	VIDEO MUTE	0 NORMAL 1 MUTE	
D04	SELF DUB GEN	0 OFF 1 3RD 2 10TH	MULTI DUB TEST MODE
D05	DUBBING MODE	0 FREEZE 1 REPEAT	
D06	EE TEST MODE	0 NORMAL 1 DCI RT	NORMAL : EE MODE (BYPASS MODE) DCI RT : FULL EE MODE (DCI RETURN)
D07	HEAD SELECT	0 PB. REC 1 PB 2 REC. PB 3 REC	PRIOR TO PB HEAD FORCED PB HEAD PRIOR TO REC HEAD FORCED REC HEAD
D08	V SETUP =NTSC ONLY=	0 OFF 1 ON	VALID / INVALID SELECTION FOR SETUP MENU 613 : VIN SETUP AND 614 : VOUT SETUP 0 : SETUP MENU 613/614 NO DISPLAY 1 : SETUP MENU 613/614 DISPLAY
D10	CMPNT HUE =NTSC ONLY=	0 OFF 1 ON	VALID / INVALID SELECTION FOR SETUP MENU 615 : CMPNT HUE 0 : SETUP MENU 615 NO DISPLAY 1 : SETUP MENU 615 DISPLAY
D11	CMPNT SET UP =NTSC ONLY=	0 OFF 1 ON	VALID / INVALID SELECTION FOR SETUP MENU 616 : CMPNT SET UP 0 : SETUP MENU 616 NO DISPLAY 1 : SETUP MENU 616 DISPLAY

D13	TELETEXT INI =NTSC ONLY=	0 MOJI 1 NABTS	SELECT DEFALUT FACTORY(DEFALUT) VALUE C IIEM 802:TELETEXT SEL ON SET UP MENU. 0 : MOJI (FOR DOMESTIC) 0 : NABTS (FOR OVERSEAS)

E00:AUDIO ADJUST

NO.	ITEM	SETTING VALUE	CONTENTS OF SETTING and ADJUSTMENT
E01	MASTER REF	0 FS-20 1 FS-18 2 FS-12	Select the position of " Reference level marker " o Audio level Meter (CH1, CH2, CUE). 0: Set to -20dB position (For NTSC) 1: Set to -18dB position (For PAL) 2: Set to -12dB Position
E05	REF LEVEL2	0 0dB 1 -3dB	VALID / INVALID SELECTION IN/OUT REFERENCE FOR SET UP MENU. 0: VALID SELECTION -20 / 0 / +4dB 1: ONLY -3dB (for GERMANY)
E06	A VCO ADJ	0 NORMAL 1 48KHz 2 44KHz 3 32KHz	SELECT THE ADJUSTMENT MODE OF AUDIO VC ADJUSTMENT MODE.
E07	MIC IN LEV	0 DIS 1 ENA	VALID / INVALID SELECTION -60dB FOR SET UP I 700 : CH1 IN LV AND 701 : CH2 IN LV 0: VALID SELECTION +4dB / 0 / -20dB 1: VALID SELECTION +4dB / 0 / -20dB / -60dB

H00:OTHER ADJUST

H01	STILL LIMIT	0 2min 1 1min	SELECTED UPPER LIMITED VALUE OF ITEM 400:STILL TIMER ON SET UP MENU. 0: 2min 1: 6min

2.3. HOW TO RESET THE HOUR METER

1. Set the DIP SW 1-1 to OFF (Normal mode) position on the front panel bottom side.
2. Set the Dip SW 501-1 to ON and Dip SW 501-2 to OFF position on the SYSCON P.C.B.
3. Press "DIAG" button on the front panel, then appeared Warning Message on the screen.

   Note:

   Normally message of "NO WARNING" appeared on the screen.
4. Press "SEARCH" button on the front panel, then appeared HOUR

METER information on the screen as indicated as below.

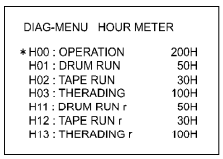

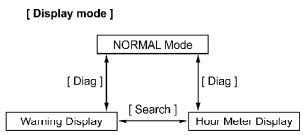

5. Set the cursor to mark “r” indicated item (item No.11,12 or 13) and press the “RESET” button on the front panel, then appeared message on the screen as indicated as below.

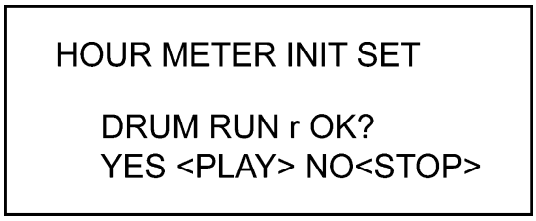

***When press the “PLAY” button, then execute the reset function.**
When press the “STOP” button, then cancel the reset command.

2.4. HOW TO CONFIRM THE SOFTWARE VERSION

1. Turn on the power.

2. Press the EJECT button.

3. Press the PLAY and STOP button simultaneously, then displayed the soft version on the counter display of the front panel.
<example> FRONT n 1.00 - 01 - 1.00

4. Press the PLAY and STOP button repeatedly, change the display of all soft version in order as indicated as below.
SYSCON → SERVO → A/V → SBC 1 → SBC 2 → I/F → FRONT

ROM location indicated as below table

Name	Reference number and Board
SYSCON	IC2 (SYSCON Board)
SERVO	IC235 (SERVO Board)
A/V	IC702 (A/V Board)
SBC 1	IC870 (REC PB Board)
SBC 2	IC910 (REC PB Board)
I/F	IC503 (SYSCON Board)
FRONT	C2 (FRONT CPU Board)

2.5. Replacement Procedure of the P. C. Board

Please refer to below table, It indicated as which board is necessary adjustment after board exchanged. And perform the adjustment follow the adjustment procedure on this manual.

	Board	Adj.		Board	Adj.		Board	Adj.
F1	SERVO	OK	F5	REC PB	OK	H2	CUE	OK
F2	SYSCON	OK	F6	V IN	OK	H3	EQ	OK
F3	SIF(Option)	—	F7	A PROC	NG	H4	RF AMP	OK
F4	V OUT	OK	F8	ADDA	OK	—	HEAD BUFF	NG

Note:

1. **If there is a ROM on P.C.Board, please confirm the software version. Refer to confirmation procedure of software version on previous page.**
2. **The DATA RAM(IC17) is installed on SYSCON Board and it data can not saved to other equipment.. When SYSCON Board exchanged, remove the IC17 on original Board and put it to New Board. Another way of move the data, write down all of User data, Service data and numerical value of Hour Meter and input the data to new RAM. But numerical value of Hour Meter can not input to VTR (Hour Meter information will be reset).**

2.6. SERVO LED INFORMATION

SERVO LED light on Front Panel, when Cylinder and Capstan Servo are locked. In case of SERVO LED does not light on PLAY or REC condition, please check at LED condition on Servo P.C.Board for confirm the which Servo is faulty.
There are condition LED on the SERVO Board (F1) as follows.

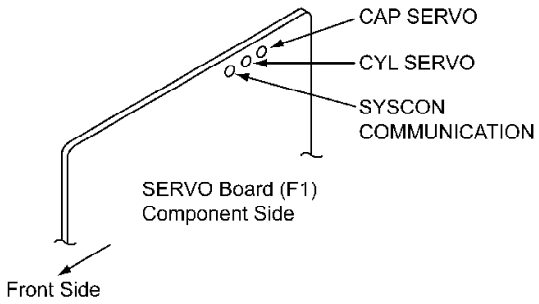

- **The LED nearest to front side light up, when Syscon CPU and SERVO CPU communication is correct.**
- **The center LED light up, when the cylinder servo is locked.**
- **The LED nearest to the Jack Board light up, when the capstan servo is locked.**

Note:
In case of capstan servo does not locked, please use function of Tracking mode selection on Service menu for confirm which servo is fault ATF or CTL.

2.7. Auto Off Error Message

In case of AUTO OFF Error is occurred, AUTO OFF LED light and error message appear on the Front Panel.
The number of below table indicates as priority display of message, when some error occurred

at the same time.

No.	Display (20 characters)	Contents	VTR Operation
1	Normal (EJECT)	After a cassette insertion, if cassette does not down within 6 seconds, VTR goes to EJECT mode.	EJECT
	FRONT LOAD MOTOR	After EJECT mode, if a cassette does not up within 6 seconds, [AUTO OFF] LED turns on and the message flashes.	STOP
2	Normal (EJECT)	Loading is not completed within 6 seconds, VTR goes to EJECT mode (unloading mode).	EJECT
	LOADING MOTOR	When unloading is not completed within 6 seconds, [AUTO OFF] LED turns on and message flashes.	STOP
3	SERVO CONTORL ERROR	If servo CPU does not respond within 1 seconds, [AUTO OFF] LED turns on and message flashes. <Actual Judgment> System control circuit sends COMM_TEST signal to Servo circuit and Servo circuit returns COMM_TEST_RET signal. If this signal is not returned within 1 seconds, "AUTO OFF" process is produced and Servo is reset for 50 ms.	STOP
4	SERVO ERROR	If only the Servo CPU perform reset operation by momentary power off, "AUTO OFF" occurred.	STOP
5	SERVO COMM ERROR	If Servo CPU does not response to command from SYSCON CPU during 10 second "AUTO OFF" LED is flashed.	STOP
6	FRONT LOAD ERROR	If Supply Reel Table rotated over time at Tape big. / end detected operation during Front loading	STOP
7	WIND UP REEL NOT ROTA	When Capstan shaft send the tape 3 cm, Take-up reel FG count number is less than regulation value.	STOP
8	WIND UP ERROR	Compare the tape movement between take up and supply reel, and if the difference is more than 2 cm, goes to "AUTO OFF" mode.	STOP
10	UNLOAD ERROR	Reel does not wind the tape in the unloading mode. Reel FG is counted in each mechanism mode.	STOP
12	S-FF/REW TIME/OVER	Reel operation does not finish at Tape beginning and end position.	STOP
14	DRUM ROTATE TOO SLOW	Cylinder rotary speed is too slow. In the cylinder on mode, cylinder PG interval is more than 1.5 ms for 5 seconds or cylinder PG is not detected for 1 seconds.	STOP

15	**DRUM ROTAE TOO FAST**	**Cylinder rotary speed is too fast. PG interval is less than 3 ms for 2 seconds.**	**STOP**
16	**CAP ROTATE TOO SLOW**	**Capstan rotary speed is too slow. In the capstan on mode, capstan FG is not detected for 5 seconds.**	**STOP**
19	**S REEL ROTATE TOO FAST**	**S-REEL Rotation speed became too high more than 2 seconds.**	**STOP**
22	**T-REEL ROTA TOO FAST**	**T-REEL Rotation speed became too high more than 2 seconds.**	**STOP**
24	**T-REEL TORQUE ERROR**	**In the Reel mode, exceed reel torque, caused by tape run over load, is detected.** **If the T Reel Torque error voltage is more than 0.5V continuously, goes to Auto Off mode within 105 seconds.**	**STOP**
25	**S-REEL TORQUE ERROR**	**In the Reel mode, exceed reel torque, caused by tape run over load, is detected.** **If the S Reel Torque error voltage is more than 0.5V continuously, goes to Auto off mode within 105 seconds or Over current flow to Reel Motor more than 0.55A for 2 seconds.**	**STOP**
26	**CAP Tension Error**	**Tension error is detected in capstan mode.** **Tension sensor voltage (SERVO : TP201) is more than 4.7 V or less than 0.3 V for 2 seconds.**	**STOP**
27	**REEL Tension Error**	**Tension error is detected in Reel mode.** **Tension sensor voltage (SERVO : TP201) is more than 4.7 V or less than 0.3 V for 2 seconds.**	**STOP**
28	**REEL DIR UNMATCH**	**Take up Reel direction error is detected.** **Rotation of Take-up reel in opposite direction has continued through complete turn except speed 0 (stop)**	**STOP**
40	**DEW**	**If the condensation has formed inside the VTR, [Auto Off] LED turns on and the message flushes, then VTR goes to Eject mode.** **<Reset Condition>** **After the cassette is ejected, Drum rotated to dry out the condensation.** **When condensation has been removed, message is cleaned and normal operation is enable.** **NOTE:** **1, Drum rotated, when the condensation is detected inside the VTR.** **2, If the condensation is detected, when insert the cassette to VTR.**	**EJECT**

41	E-FF	The tape beginning and end position are detected simultaneously during loading or after loading completed mode.	STOP

*** Other Operation.**

1. If the Reel Base unit does not move to prescribed position within 3 seconds, Reel Motor goes to stop and the cassette is ejected.

2.8. AUTO OFF Check Point Table

Message	Check Point	
WINDUP_REEL_NOT_ROTA	Check the loosen of the tape before power on. ● S Reel side before capstan motor → S Reel side is abnormal at REV mode. ● T Reel side after capstan motor → T Reel side is abnormal at FWD mode	1. Check the d Torque Offset (Front Rear SV ON) [In case of abı ● Check loos Mech I/F boar ● Check Ser Motor Drive ci TRH~1,2,3, SH TRM1,2,3, SRI ● Check Ree Replace Reel 2.Check Reel (Check the Re Reel Torque C [In case of abı ● Check loos Mech I/F boar ● Check Sys Solenoid Driv S_BRAKE_N, 3. Grease is n

WINDUP_ERROR		**1. Check the t** **● Check Spr** **of Tension Re** **● Check Ten** **Voltage Check** **Refer to the T** **2. Check the F** **Capstan FG –** **Capstan FG C** **Reel FG — Re** **Check 2** **3. Check Reel** **Torque Offset** **4. Check Tape** **5. Check Tape**
UNLOAD_ERROR	**Check the tape is surely wound.**	**1. Check dead** **Torque Offset** **(Front Rear SW** **ON)** **[In case of abn** **● Check loos** **Mech I/F board** **Check Motor I** **TRH~1,2,3, SH** **TRM1,2,3, SR** **● Check Ree** **Replace Reel** **2. Check Reel** **[In case of ab** **Re-adjustmen** **3. Check Reel** **(Check the Re** **Reel Torque C** **[In case of abn** **● Check loos** **Mech I/F board** **● Check Sys** **Solenoid Drive** **S_BRAKE_N,** **4. Check Reel** **Reel FG — Re** **Check 2**

S_FF/REW_TIMEOVER	Check the problem occurred at tape beginning or tape, or other portion.	1. Check Reel Reel FG — Re Check 2 [In case of abı ● Check loos Mech I/F boarı ● Reel FG Se ● Check F1 b 2. Check trans [In case of abı ● Check loos Mech I/F boarı ● Replace se ● Check F2 b 3. Check the t
S_REEL_ROTA_TOO_FAST		1. Check Reel Reel FG — Re Check 2 [In case of abı ● Check loos Mech I/F boarı ● Reel FG Se ● Check F1 b 2. Check Reel TP450 and TP
T_REEL_ROTA_TOO_FAST		1. Check Reel Reel FG — Re Check 2 [In case of abı ● Check loos Mech I/F boarı ● Reel FG Se ● Check F1 b 2. Check Reel TP450 and TP

T_REEL_TORQUE_ERROR		1. Check Reel [In case of ab Re-adjustmen 2. Check Reel (Check the Re Reel Torque C [In case of abı ● Check loos Mech I/F boar ● Check Sys Solenoid Driv S_BRAKE_N,
S_REEL_TORQUE_ERROR		1. Check Reel [In case of ab Re-adjustmen 2. Check Reel (Check the Re Reel Torque C [In case of abı ● Check loos Mech I/F boar ● Check Sys Solenoid Driv S_BRAKE_N,
DRUM_ROTATE_TOO_FAST		Check Cylinde Check Cylinde [In case of fas ● Check Cyli ● Check CYL Normal Rotati During Full Ac EJECT mode Servo REF (IC If above voltag correct. [In case of FG PG signal flov Mother >> Ser

DRUM_ROTATE_TOO_SLOW	**Check that the tape is stick with the Cylinder.** **Check that the tape is stick with a part of the tape pass and it causes the high tension. In this case tape may brake the Cylinder rotation.**	**Check Cylinde** **Check Cylinde** **[In case of FG** **PG signal flov** **Mother >> Ser** **[In case of bot** **rotation is act** **(1). Check Cyl** **Rotate the Cyl** **Check that the** **smooth, the C** **(2). Check the** **Check that the** **pulse which is** **50 %, 0V/5V.** **If it is incorrec** **(3). Check the** **command.** **● Check that** **is output at C'** **● Check that** **pin. when it is** **(4). Check the** **Check that SE** **about 2.5 V.** **→ If (3) or (4)** **/A is incorrect** **(5). Check tha** **Check that Dr** **and Motor Dri** **The VM is pos** **→ If it is corr** **is incorrect.** **Check conne**

CAP_ROTATE_TOO_SLOW	**Check the tape is not stacked with the tape pass and tension is not high.** **Check the mechanical load of Capstan.**	**Refer to Caps** ● **In case of** **the message i** **The FG signal** **speed is not s** **frequency at C** **with the rotary** **PB mode).** **Check the cor** **Mother.** ● **In case of** **(1). Check the** **command.** **Check the SEI** **Check the CA** **command. It i** **the capstan d** **should be 0 V.** **Check Drive C** **and 0 V (fwd),** **(2). Check the** **Check the Dri** **27 pin).** **Check Motor I** **pin).** **(3). Check the** **motor.** **Check the cor** **Mother.** **If above condi** **circuit is inco**
Fig 1 **REEL Position Detect**	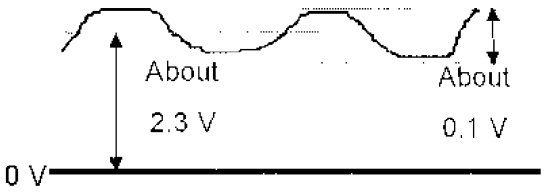	**Rotate the RE** **the following** **F1 board** **P2 - 10a TRH1** **10b TRH1-** **10c TRH2+** **11a TRH2-** **11b TRH3+** **11c TRH3-** **12c SRH1+** **13a SRH1-** **13b SRH2+** **13c SRH2-** **14a SRH3+** **14b SRH3-**

Fig2 **REEL Drive Waveform**	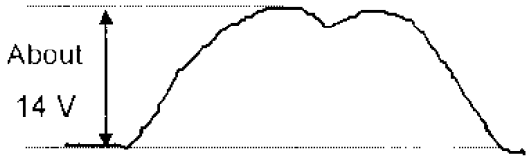	**Set Front Rea** **Select T or S_** **the REEL and** **Fig. 2.** **F1 board P2-2** **23c TRM1** **24c TRM2** **25b SRM3** **25c SRM1** **26c SRM2**
Fig. 3 **Brake Solenoid**	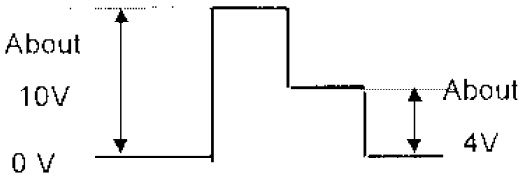	**Set Front Rea** **Select T or S_** **the waveform** **positions at B** ● **T_REEL_T** **F2 board P2 -2** ● **S_REEL_T** **F2 board P2 -2**

3. Maintenance/Disassembly Procedures & Mechanical Adjustment

3.1. Maintenance

3.1.1. Maintenance Part Chart

No	Name	Part Number	Part Using Hours (Unit hours)				
			2,000	4,000	6,000	8,000	10,000
.	Tape Path Cleaning		[C]Clean the Tape Path at each 500 hour				
1	Cylinder Unit	VEG1337	R	R	R	R	R
2	Cleaning Arm Unit	VXL2748	R	R	R	R	R
3	Pinch Arm Unit	VXL2835		RG		RG	
4	S Reel Motor Unit	VEM0686			R		
5	T Reel Motor Unit	VEM0687			R		
6	Thrust Screw Unit	VXQ0556			RL		
7	Front Loading Unit	VXA6070					
8	Mech. Chassis Unit	VXY1431Z1					
9	Fan Motor	VRF0190	Replace the Fan Motor at each 10,000 hours Op Time				

Note:

Using hours are based on the head rotation hours.

Using hours are recommendation. It may depended on temperature, humidity or dusty.

Using hours are listed as the reference of maintenance. They do not mean guarantee Hours.

Symbol	Maintenance	Remark
R	Replacement	
r	Replacement	These parts are included in Mech Chassis Unit
G	Greasing	Wipe the old grease and apply new grease
[C]	Cleaning	This mark means cleaning is necessary
L	Lubrication	The lubrication is necessary

3.1.2. Sensors Layout

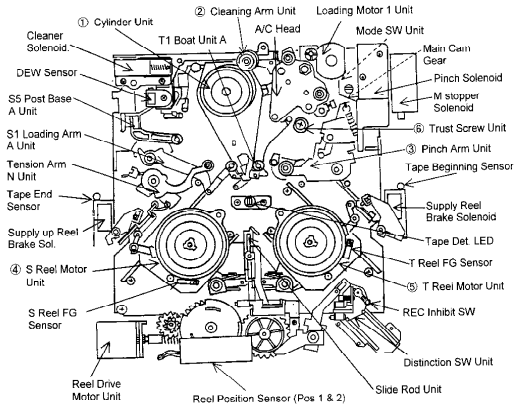

3.1.3. Servicing Fixtures & Tools

No.	Part No.	Name	AJ-D850	Remark
1	VFK1145	Back Tension Meter (T2-M30-P)	Use	
2	VFK1149	Post Driver	Use	
3	VFK71	Dial Torque Gauge (150 g)	Use	
4	VFK1191	Dial Torque Gauge (45g)	Use	
5	VFK1152	Dial Torque Gauge Adapter	Use	
6	VFK0357	Eccentric Screwdriver (1.5)	Use	
7	VFK1154	Post Height Fixture	Use	
8	VFK1153	Mech. Neutral Plate(Post)	Use	
9	VFK0906	Oil	Use	
10	VFK1155	REV Position Tool (Silver color)	Use	
11	VFK1156	PLAY Position Tool (Black color)	Use	
12	VFK1208	Neutral Position tool (Black with hole)	Use	
13	VFK1150	Nut Driver (5.5mm)	Use	
14	VFK1151	Nut Driver (2.5mm)	Use	
15	VFK1188	Dial Tension Gauge (30g)	Use	
16	VFK0948A	Check Light	Use	
17	VFK0749	Froiral Grease (White: for plastic part)	Use	
18	M0R265	Morlytone Grease (Black: for metal part)	Use	
19	VFK1146	Philips Driver (00-75)	Use	
20	VFK1147	Philips Driver (00-100)	Use	

21	VFK1148	Hex. Driver (1.5mm)	Use	
22	VFK1178	Hex. Driver (0.89mm)	Use	
23	VFK1179	Hex. Driver (0.71mm)	Use	
24	VFK1190	Hex. Wrench (1.5mm)	Use	
25	VFK1209	Torque Driver(0.4-3Kg)	Use	
26	VFK1375	Post Axis Driver(1.5mm)	Use	or VFK0912
27	VFK1300	A/D Converter Board (DAQ-12 Quatech)	Use	Purchase Locally
28	VFM3580KM	Alignment Tape (No.1)	Use	for NTSC
29	VFM3581KM	Alignment Tape (No.2)	Use	for NTSC
30	VFM3582KM	Alignment Tape (No.3)	Use	
31	VFM3680KM	Alignment Tape (No.1)	Use	for PAL
32	VFM3681KM	Alignment Tape (No.2)	Use	for PAL
33	VFM3682KM	Alignment Tape (No.3)	Use	for PAL
34	VFM3000EDS	Alignment Tape (DV LISTA)	Use	
35	VFM3010EDS	Alignment Tape (DV Color Bar)	Use	for NTSC
36	VFM3010EDS	Alignment Tape (DV Colour Bar)	Use	for PAL
37	AJ-CL12MP	Cleaning Tape	Use	
38	VFK1192	Extension Board (F)	Use	
39	VFK1193	Extension Board (H)	Use	
40	VFK1481	LISTA Software	Use	
41	VFK1186	LISTA Cable	Use	
42	VFK1160C	RF Adjustment Software	Use	
43	VFK1163	RF Adjustment Tape	Use	
44	VFK1423	Tape Det. Sensor Cassette	Use	
45	VZZ0095	Cleaning Cross	Use	
46	VFK0369	Tweezers	Use	
47	VFK0371	Radio Prier	Use	
48	VFK0372	Cutter Prier	Use	
49	VFK0338	Trimmer Adjustment Driver	Use	
50	VFK0337	Philips Driver	Use	

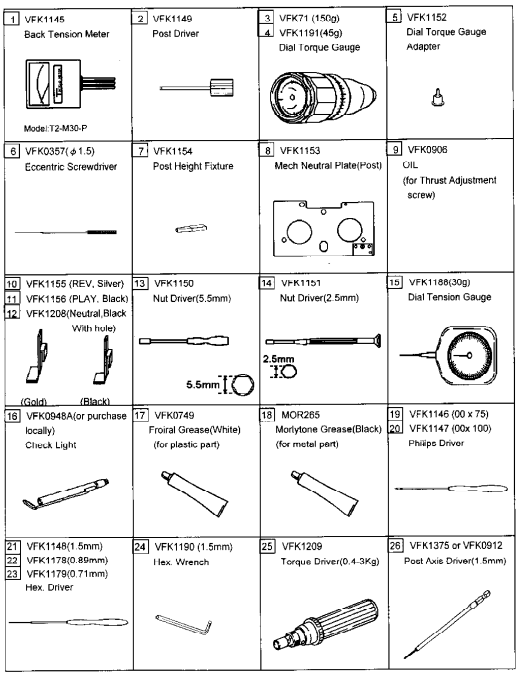

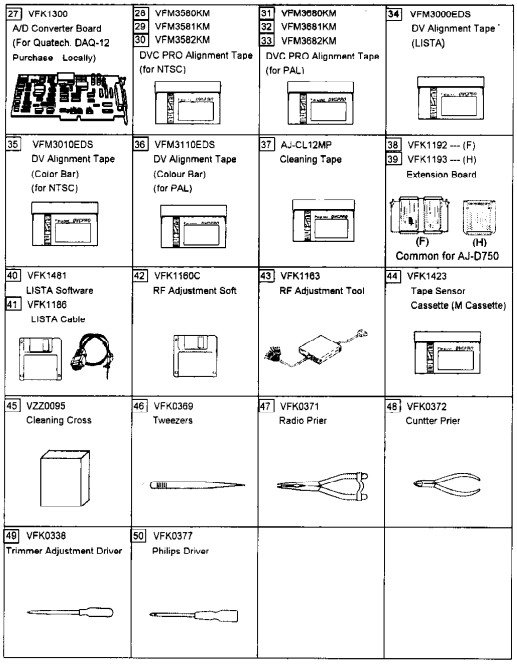

3.1.4. CIRCUIT BOARD LOCATION

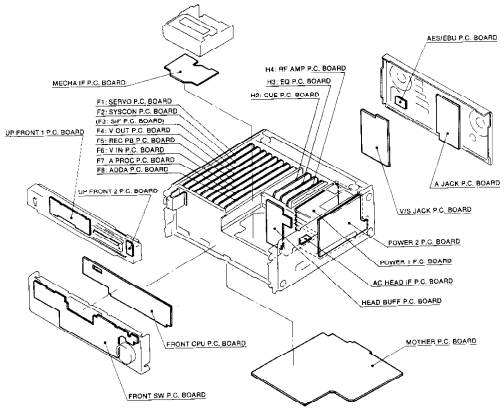

3.1.5. Alignment Tapes

DVCPRO Alignment Tape

VFM3580KM(NTSC)

Time	Video		PCM		CUE	
(min)	Signal	Purpose	Signal	Purpose	Signal	Purpose
0:00	Color Bar SMPTE(75%)	Composite Video Level Confirmation	1kHz - 20dB	Audio Level Confirmation	1kHz 0VU	CUE Level Confirmation
7:00	Color Bar Full Field(75%)	Component Video Level Confirmation				
14:00	H Sweep	Frequency Response			6kHz 0VU	A/C Head Azimuth
18:00	Bowtie(500k)	Y/C Timing				
22:00	Pulse&Bar	Y/C Timing			-10dB, 1kHz 50Hz~15kHz	Frequency Response
26:00 30:00	Area Markers					

VFM3581KM(NTSC)

Time(min)	Signal
0:00~20:00	ITI Pattern

VFM3582KM(NTSC)

Time(min)	Signal
0:00~10:00	X Value

VFM3680KM (PAL)

Time	Video		PCM		CUE	
(min)	Signal	Purpose	Signal	Purpose	Signal	Purpose
0:00	Color Bar 100%	Video Level Confirmation	1kHz -18dBu	Audio Level Confirmation	1kHz Reference level	CUE Level Confirmation
10:00	H Sweep	Frequency Response				
14:00	Area Markers				6kHz Reference level	A/C Head Azimuth
18:00	Bowtie(500k)	Y/C Timing				
22:00	Pulse & Bar	Y/C Timing			1kHz 300Hz~6kHz	Frequency Response
26:00 30:00	Multi Pulse	Y/C Timing				

VFM3681KM (PAL)

Time (min)	Signal
0:00 ~ 20:00	ITI Pattern

VFM3682KM (PAL)

Time (min)	Signal
0:00 ~ 10:00	X Value

3.1.6. Recommended Test And Service Equipment

NTSC

Part No.	Name	Remark
TSG130A(OP.04)	Analog Component Signal Generator	TEKTRONIX
	Oscilloscope	
1750,1760(OP.SC) or 1780R	WFM Monitor	TEKTRONIX
	Digital Volt Meter	
	Frequency Counter	
	VTVM	Frequency Band Width 4Hz–500KHz
	Audio Analyzer	

PAL

Part No.	Name	Remark
TSG131A(OP.04)	Analog Component Signal Generator	TEKTRONIX
	Oscilloscope	
1751,1761(OP.SC) or 1781R	WFM Monitor	TEKTRONIX
	Digital Volt Meter	
	Frequency Counter	
	VTVM	Frequency Band Width 4Hz–500KHz
	Audio Analyzer	

3.2. Disassembly Method

3.2.1. Removal of Top Panel

1. Loosen the two screws on the top panel.

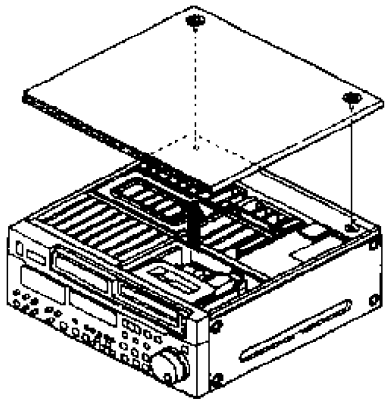

3.2.2. Removal of Bottom Panel

1. Unscrew the 4 screws (A) and loosen the screw (B).

2. Slide the bottom panel to front direction and remove the bottom panel.

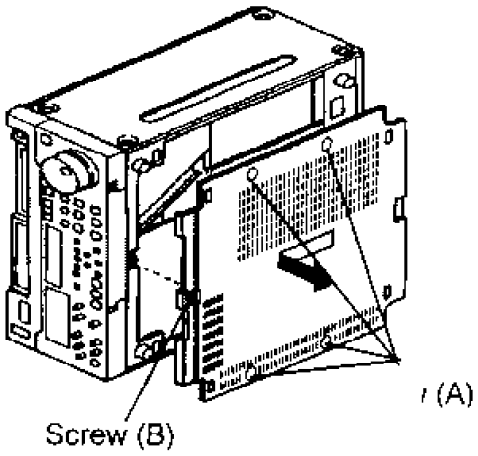

3.2.3. Removal of Upper Front Panel

1. Draw up the Front Panel and unscrew the 6 screws.

2. Remove the Upper Front Panel and disconnect the one connector.

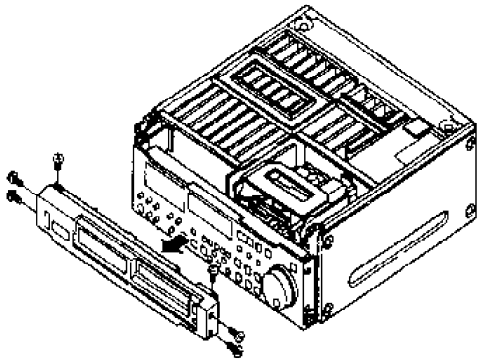

Note:

After installation of Upper Front Panel, confirm that the Blinder Panel is moved up and down smoothly by hand. If not, the Blinder Panel is caught by Blind Panel Opener.

3.2.4. Removal of Front Panel

1. Remove the Upper Front Panel.

2. Draw up the Front Panel and unscrew the 4 screws and disconnect one connector, then remove the Front Panel.

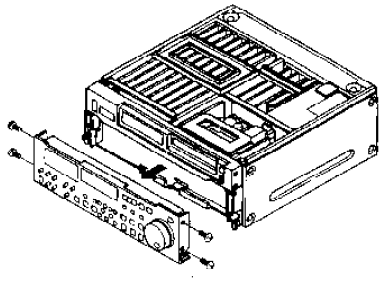

3.2.5. Removal of Front Loading Unit

1. **Move the Cassette Holder until the 2 screws (A) can be removal position.**

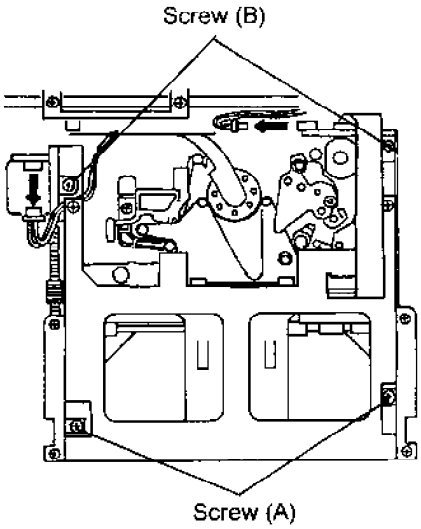

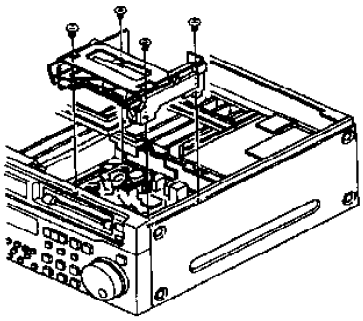

2. **Disconnect 2 connectors at Front Loading motor part and the mechanism interconnection board.**
3. **Unscrew the 4 screws (A) and (B), then remove the Front Loading Unit.**

3.2.6. Removal of Power Supply unit

1. **Remove the Bottom Panel.**
2. **Disconnect the 5 connectors with the Power Supply unit at the VTR bottom side.**
3. **Unscrew the 2 screws with the Power Supply unit at the VTR bottom side.**

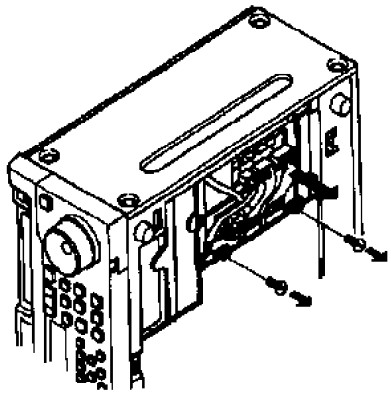

4. **Unscrew one screw with the Power Supply unit on the VTR top side.**

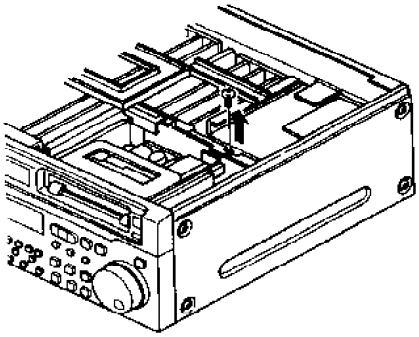

5. **Unscrew the 7 screws and remove the Rear Jack Panel.**

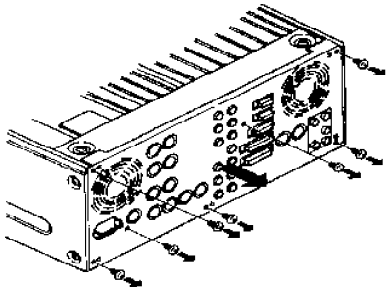

6. **Unscrew the 2 screws with the Power Supply unit at the VTR rear side, then Power Supply Unit can be removal..**

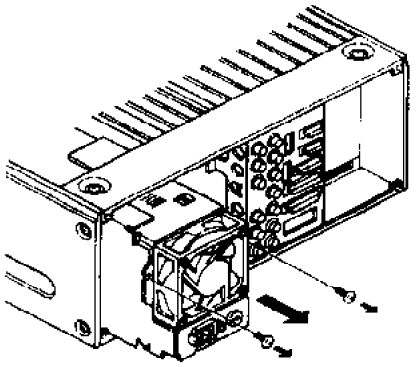

3.2.7. Removal of Cylinder Unit

1. **Remove the Bottom Panel**
2. **Disconnect the connector P33 on the Mech. I/F Board. And remove the 3 screws which have spring from the cylinder unit..**

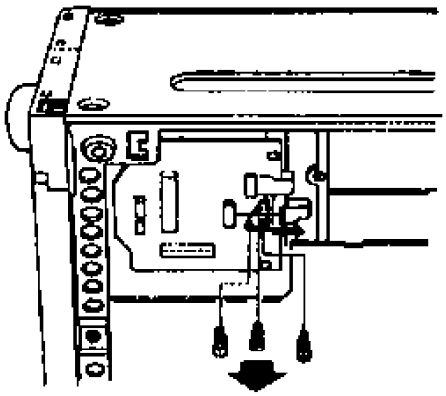

3. **Remove the one screw which is fixed with the flexible cable, it attached Cylinder Unit..**
4. **Disconnect the connector P5002 and P5003 on the Head Buffer Board, then remove the cylinder unit without touching any mechanism parts.**

- Assemble procedures are reverse of the disassembly method.

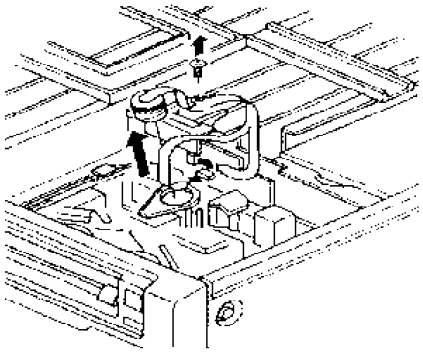

3.2.8. Removal of Mechanism Unit

1. Remove the Front Loading unit.
2. Remove the Bottom Panel.
3. Disconnect the connector P1 and P2 on the Mech. I/F Board.
4. Disconnect the connector P1 on A/C Head I/F Board for remove the A/C Head cable.

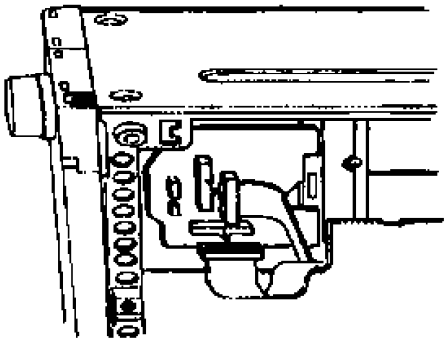

5. Disconnect the connector P5002 and P5003 on the Head Buffer board.
6. Unscrew the 3 screws and remove the mechanism unit.

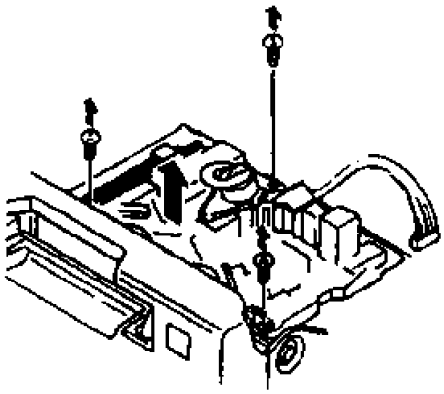

3.2.9. Removal of Fun Motor Unit

1. Unscrew the 7 screws and remove the Rear Jack Panel.

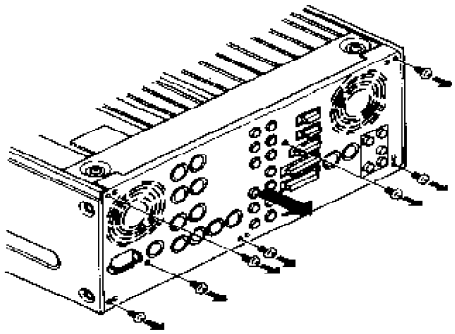

2. Unscrew the 2 screws and disconnect the connector P14 on the Power 2 P.C.B. ,then remove the Fan Motor as shown as below figure.

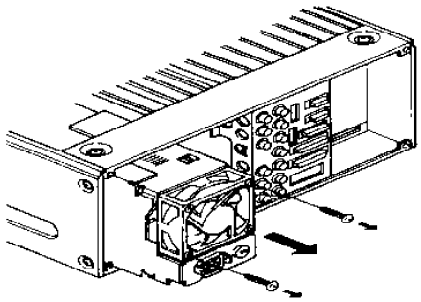

3. Unscrew the 2 screws and disconnect the connector P32 on Mother P.C.B. ,then remove the Fan Motor as shown as below figure.

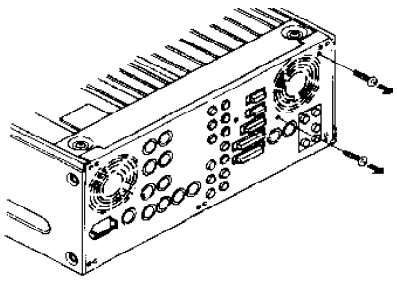

3.3. Manual Tape Eject

When a tape can not be ejected, because of Power failure or mechanical tape damage, remove the tape manually.

1. **Turns power off and remove the top Case Unit.**
2. **Rotate the red plastic screw by a Phillips — head screwdriver counterclockwise pushing the screw. It needs to rotate about 30 times rotation until starting to move.**
3. **Since tape slack will develop when the post is unloaded, wind up the supply reel to take up the slack.**
   How to take up the slack (see (3))
   A. Insert the rubber side of the take-up jig into the cassette tape withdrawal opening on the VTR's mechanism side.
   B. Turn the flange part of the supply reel in the direction of take-up to take up the tape slack. (Take care not to damage the tape in the process.)

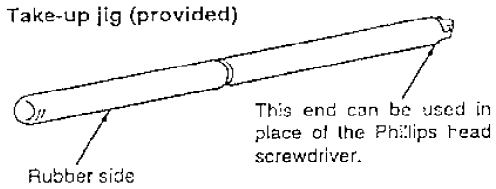

4. **Repeat item 2 and 3 until the tape in wound Completely inside of the cassette.**
5. **When the tape is completely inside of the cassette, rotate the red screw in front of the worm gear of the cassette down motor clockwise by a Philips-head screwdriver pusing the screw and remove the cassette cover does not bite the tape when the cover is closed.**

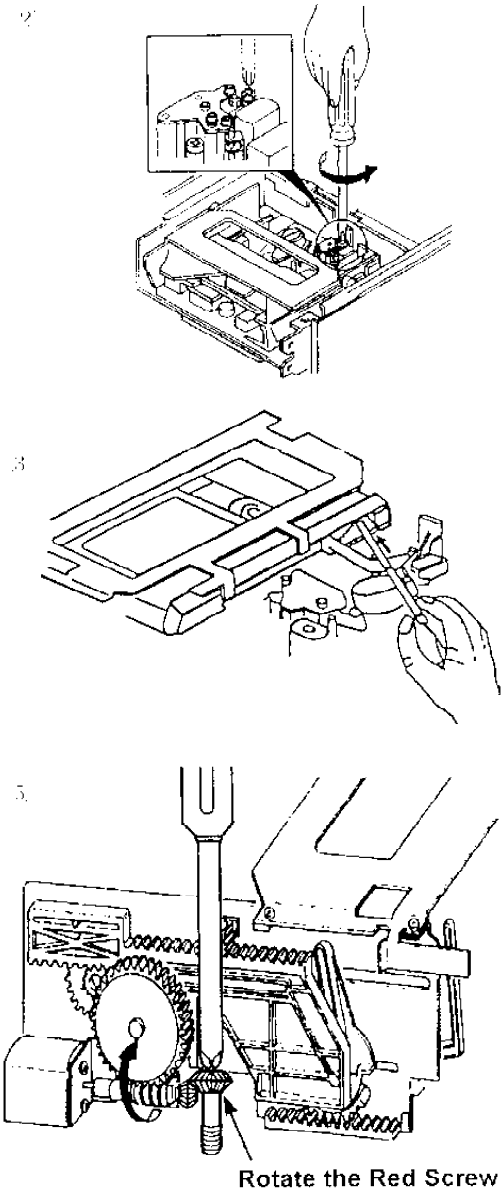

3.4. Cleaning Procedures

Note:

Turns power off during cleaning.

Make sure the power is OFF before cleaning. Use ethanol(more than 99% purity) as cleaning liquid.

3.4.1. Cleaning of Head Chips: (Daily)

Clean heads by applying even pressure and rotating cylinder a few times. Never wipe in up and down motion. Never touch a cylinder by naked hand. First wipe with a cloth soaked by cleaning liquid. Then wipe with dry cloth.

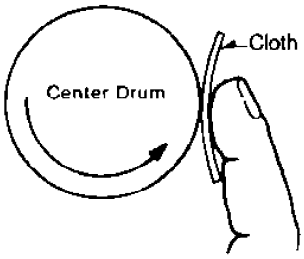

3.4.2. Cleaning of Drum Lead: (Weekly)

Be careful not to touch a head chip. Clean the drum lead with a pick.

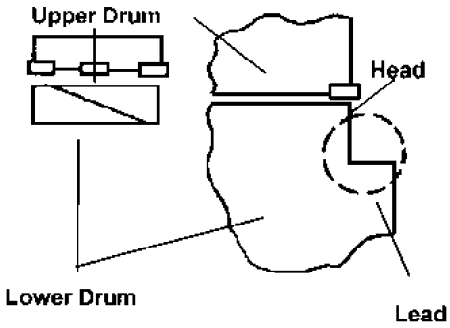

3.4.3. Cleaning of A/C Head: (Weekly)

Wipe the A/C head with a cloth soaked by cleaning liquid. Wipe again with a dry cloth.

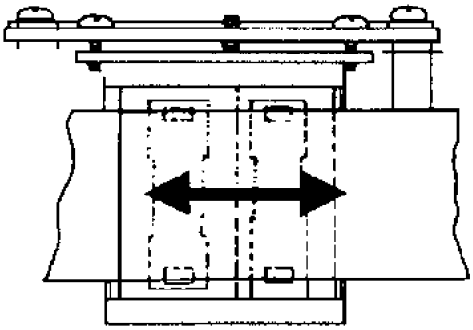

3.4.4. Cleaning of Pinch Roller and Capstan: (Weekly)

Wipe the Pinch Roller and Capstan with a cloth soaked by cleaning liquid.

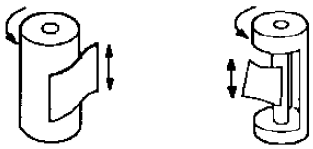

3.4.5. Cleaning of Post :(Weekly)

Wind a cloth on a pick. Wipe each post dry with that pick . Wipe again with a dry cloth. For metal posts wipe with cleaning liquid. Then wipe dry again.

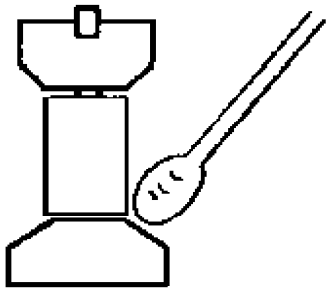

Note:

Use the clean cloth for cleaning purpose. Do not use any dirty cloth.
The Cleaning Cloth can be ordered as spare part. The part number indicated as below.
CLEANING CLOTH : VZZ0095

3.5. Mechanical Adjustment

3.5.1. Name of tape transportation

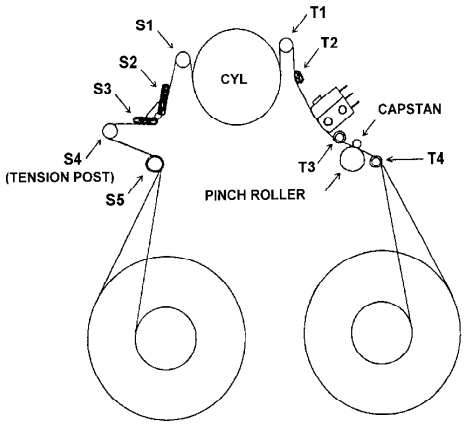

3.5.2. Pinch Solenoid Position Adjustment

SPEC.	T = 0.3mm
TEST POINT	Gap T
ADJUSTMENT	Screw(A), Hole(B)
MODE	EJECT(Power OFF)
TOOL	VFK0357(Eccentric Driver)

1. **Confirm the power of condition at VTR.**
2. **Push the pinch roller by hand to be close to capstan.**
3. **Push the pinch solenoid by hand so that the pinch roller contacts capstan.**
4. **Loosen the two screws (A) and adjust the hole (B) by VFK0357 so that gap (T) is within specification.**

5. The position for confirm Gap, which is located spring scratch to Plate (C) side.

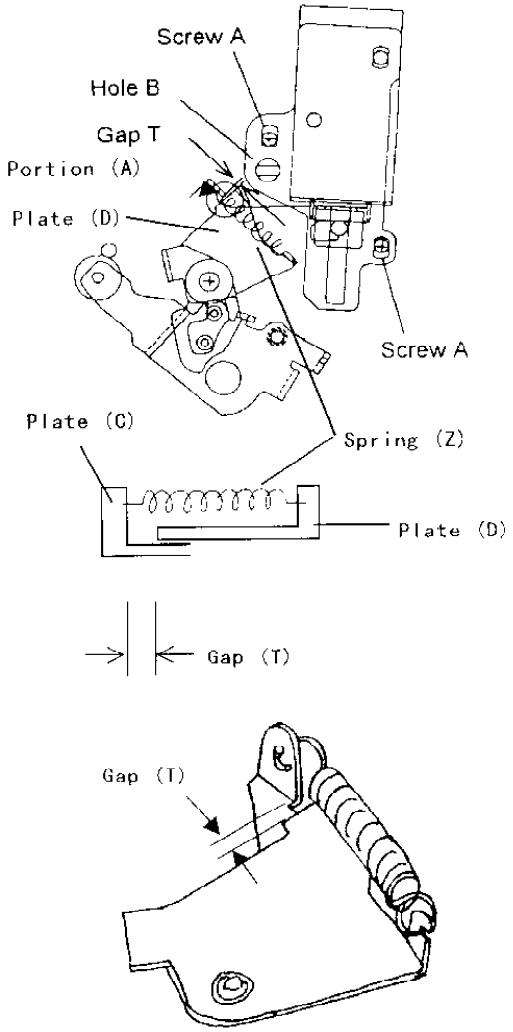

3.5.3. Main Brake Torque Confirmation

SPEC	**Direction A : more than 80g** **Direction B : more than 15g**
TEST POINT	**S reel, T Reel**
MODE	**EJECT(POWER OFF)**
TOOL	**VFK71(150g), VFK1191(45g), VFK1152**

1. Remove the Cassette Up Unit.

2. Install the adapter(VFK1152) to the torque gauge (VFK71).

3. Put the torque gauge on S Reel and Turn the torque gauge to direction A until S Reel slips against brake.
4. Confirm the torque is within specification.
5. Put the torque gauge on T Reel and turn the torque gauge to direction A until T Reel slips against brake.
6. Confirm the torque is within specification
7. Install the adapter(VFK1152) to the torque gauge (VFK1191).
8. Put the torque gauge on S Reel and turn the torque gauge to direction B until S Reel slips against brake.
9. Confirm the torque is within specification.
10. Put the torque gauge on T Reel and turn the torque gauge to direction B until T Reel slips against brake.
11. Confirm the torque is within specification.

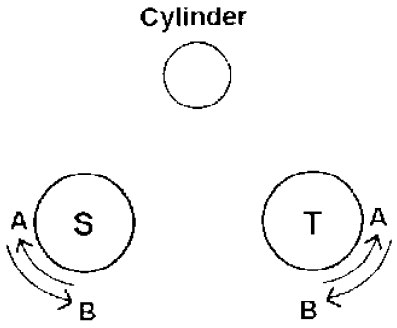

3.5.4. Post Height Pre-adjustment

MODE	EJECT(POWER OFF)
TOOL	VFK1153, VFK1154(Flange Tool)

1. Turn the power OFF and then set the tube* to cover the sensor LED and place the unit in no tape loading mode.
   Note:
   Make a tube* by yourself.
2. Install the Mech. Neutral Plate (VFK1153) and adjust each post height as shown in figure.
3. Adjust the each post to Lower limit by VFK1154 as shown in

figure.

4. VFK1149 use for Post height adjustment of S4 and S5 post.
   VFK1151 use for Post height adjustment of T3 and T4 post.

Post	Limit	Post Driver
S5 Post	Lower*	VFK1149
S4 Post	Lower*	VFK1149
T3 Post	Lower	VFK1151(2.5mm Nut Driver)
T4 Post	Lower	VFK1151(2.5mm Nut Driver)

Note:
Lower* :
Turn S4 and S5 posts 1 round more counterclockwise from lower limit position.

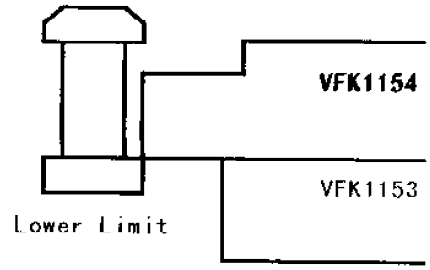

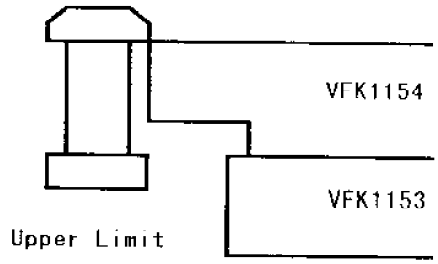

3.5.5. Tension Adjustment Flowchart

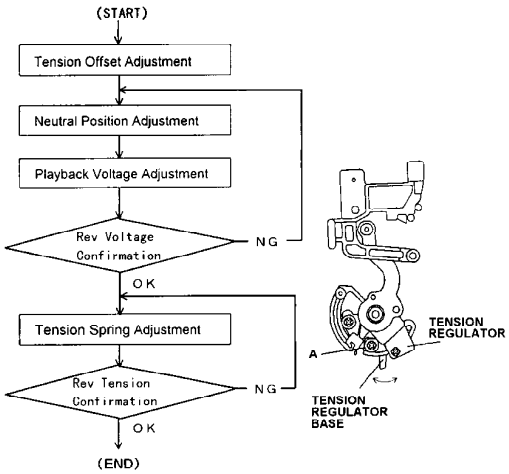

3.5.6. Tension Offset Adjustment

BOARD	**SERVO**
SPEC	**2.5±0.05V**
TEST POINT	**TP201(SERVO:F1)**
ADJUSTMENT	**VR1(MECH I/F)**
MODE	**EJECT**
TOOL	**Digital Volt Meter**

1. Adjust the VR1 so that the DC voltage at TP201 is within specification.

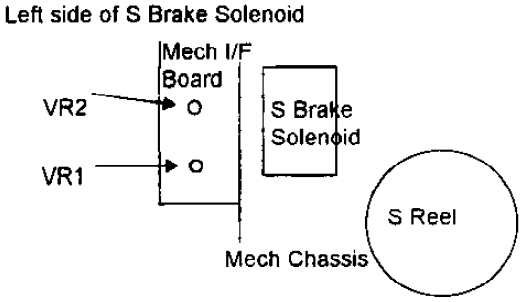

3.5.7. Tension Arm Neutral Position Adjustment

BOARD	**SERVO**
SPEC	**2.5±0.1V**
TEST POINT	**TP201(SERVO:F1)**
ADJUSTMENT	**Base position of Tension Regulator Board**
MODE	**STOP**
TOOL	**Digital Volt Meter** **VFK1208 (Black,with hole)**

1. **Unscrew the 2 screws and remove the Carriage Support Panel on the Front Loading Unit.**
2. **Disconnect the connector P3 on the Carriage Board of the Front Loading Unit..**
3. **Unscrew the 6 screws and remove the Top Plate on the Front Loading Unit.**
4. **Install the VFK1208(black with hole) as shown in figure**
5. **Connect the Digital Volt Meter to Test point.**
6. **Place the unit into the no tape loading mode(Refer to No tape loading mode procedure as mentioned as below.**
7. **Loosen the screw (A) and move the lever (D) with tweezers for adjust the sensor position so that the DC voltage at TP201 is within specification.**

[No tape loading procedures]
Open the SERVO ADJUST menu on the Service Menu. Select the "T REEL TRQ" by cursor key and press SEARCH button on the Front Panel, then loading is started. During adjustment, hold the SEARCH button.

CAUTION:

1. **Do not use magnetized tweezers and Screw driver.**
2. **Do not touch the magnetize Screw driver to S-Reel FG magnet portion, when the lever (D) portion is adjusting.**

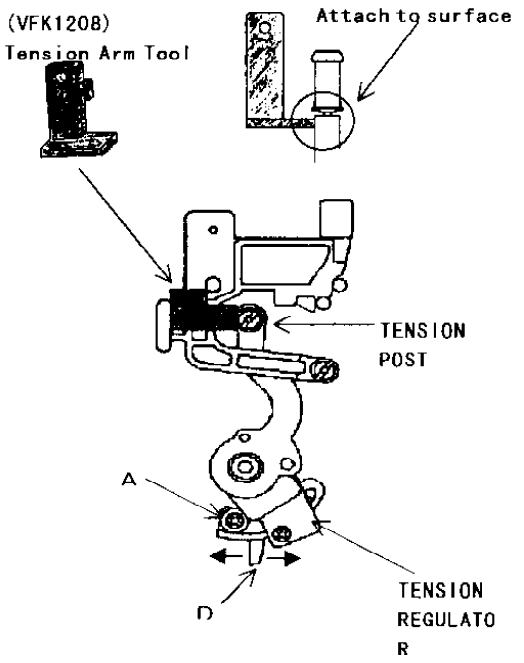

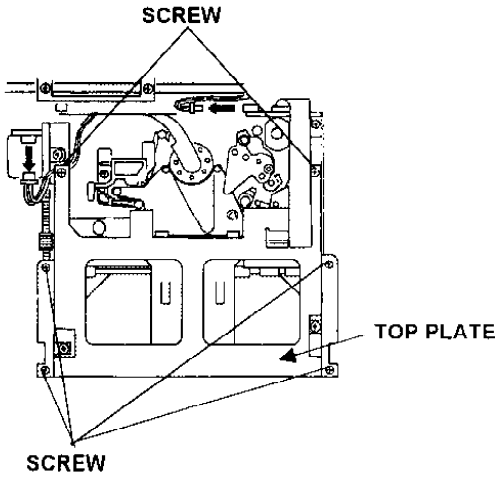

3.5.8. Tension Arm PLAY and REV voltage adjustment

BOARD	**SERVO**
SPEC	**(PLAY) 3.8±0.05V** **(REV) 1.2±0.3V**
TEST POINT	**TP201(SERVO:F1)**
ADJUSTMENT	**VR2(Mech I/F)**
MODE	**STOP**
TOOL	**Digital Volt Meter** **VFK1156(Black:for PLAY position)** **VFK1155(White:for REV position)**

1. Install the VFK1156(black) as shown in figure.
2. Connect the Digital Volt Meter to Test point.
3. Place the unit into no tape loading mode.
4. Adjust the VR2 so that the DC voltage at TP201 is within specification (PLAY).
5. Install the VFK1155 as shown in figure and confirm that the DC voltage at TP201 is within specification (REV).
6. If it out of spec, perform the Neutral Position adjustment again.

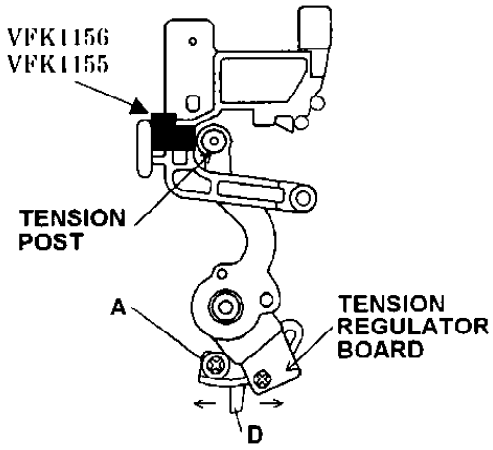

3.5.9. Tension Regulator Spring Adjustment

BOARD	SERVO
SPEC	11±1gf
TEST POINT	TP201(SERVO:F1)
ADJUSTMENT	Tension Regulator Spring hook (B)
MODE	STOP
TOOL	Digital Volt Meter VFK1188(30g Dial Tension Gauge)

1. Connect the Digital Volt Meter to Test point.
2. Place the VTR into no tape loading mode.
3. Insert the tension gauge to push the tension post to the direction R until the voltage at the TP201 is 3.8V (PLAY position)
4. Loosen the screw (C) and adjust the position of hook (B) so that

the indication of gauge is within specification..

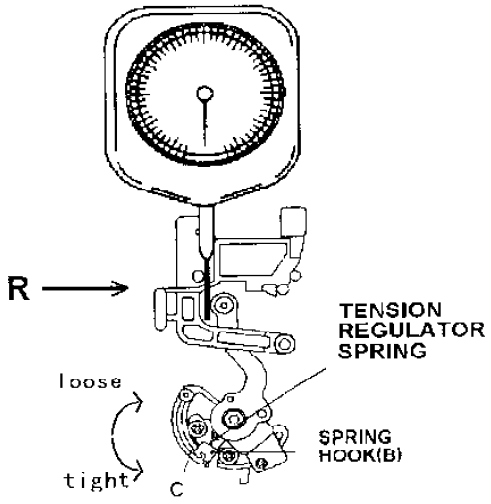

3.5.10. REV Tension Confirmation

BOARD	**SERVO**
SPEC.	**18±2gf**
TEST POINT	**TP201(SERVO:F1)**
MODE	**STOP**
M.EQ	**Digital Volt Meter** **VFK1188(30g Dial Tension Gauge)**

1. **Connect the Digital Volt Meter to Test point.**
2. **Place the VTR into no tape loading mode.**
3. **Insert the tension gauge to push the tension post to the direction R until the voltage at the TP201 is 1.2V (REV position)**
4. **Confirm that the indication of gauge is within specification. If not, make the Tension Spring Adjustment again.**
5. **After finish this adjustment , grew the screw A,B and C . The grew quantity at B is half of A and C.**

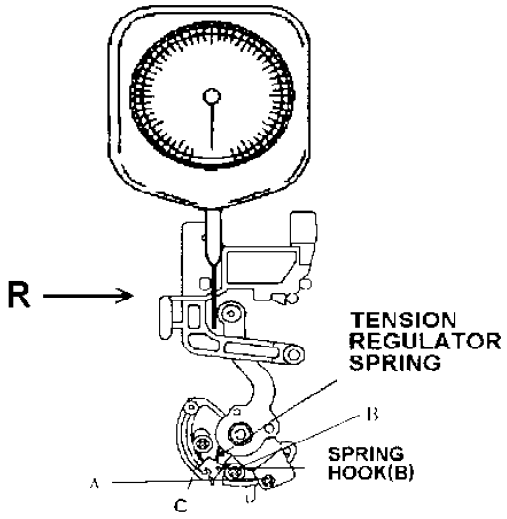

3.5.11. Tension Confirmation

SPEC	(PLAY)6.0±1gf (REV) 9.0±2gf
MODE	PLAY, REV×1
TAPE	63 min M size Blank Tape
TOOL	VFK1145(Tension Meter)

1. Play back beginning portion of the tape.
2. Insert the tension meter between S3 post and S4 post.(Refer to figure).
3. Confirm the tension is within specification.
4. Place the unit in REV mode.
5. Insert the tension meter between S4 post and S5 post.(Refer to figure)
6. Confirm the tension is within specification.

Note:

Be careful not to give some tape damage.

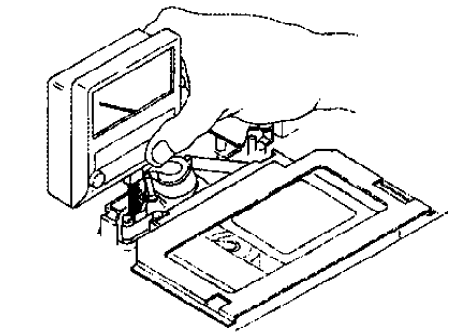

Play Tension

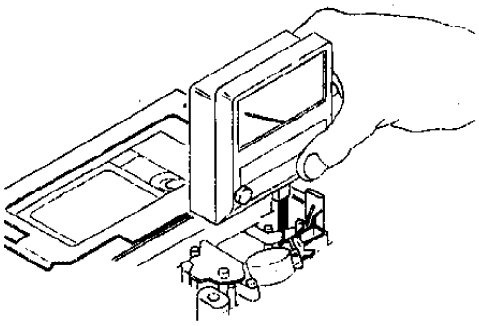

Rev Tension

3.5.12. Tape Pass Adjustment Procedure

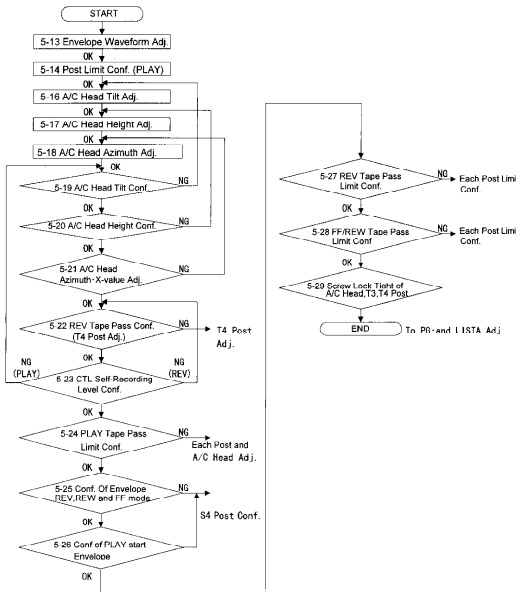

3.5.13. Envelope Waveform Adjustment

SPEC	V1/Vmax,V2/Vmax,V3/Vmax ≥ 0.8
TEST POINT	TP16:R/P ENV (RF AMP Board:H4) TP1 :TRIG/HSW (RF AMP Board: H4)
ADJUSTMENT	S1,T1 Post Height
MODE	PLAY(ATF)
TAPE	NTSC: VFM3580KM PAL: VFM3680KM
M.EQ	Oscilloscope
TOOL	VFK1149(Post Driver)

1. Playback the alignment tape.
2. Adjust S1 and T1 post height so that the R/P envelope output is within the specification.
3. When the S1 and T1 posts are adjusted, first raise the post height and make small the entrance and exit side of the envelope, then down the post until envelope becomes flat.
4. With order to adjustment, basically adjust T1 post for makes flat at exit side of envelope first and adjust S1 post.
5. After finish this adjustment, unload the tape and load the tape again, then confirm the shape of Envelope waveform does not changed.

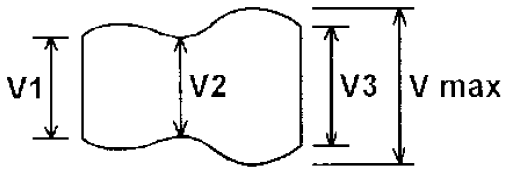

3.5.14. Post Limit Confirmation (PLAY)

SPEC	Post limit shown in the table No tape curl
MODE	PLAY
TAPE	Blank Tape
TOOL	VFK1149(Post Driver) VFK1151(Nut Driver)

1. **Confirm that the tape pass limit follow the as shown as below table and adjust it in case of need.**
2. **Confirm that the kinds of D,E and F condition do not appeared on the tape as shown in figure.**

Post	Limit	Adjustment
S5	Lower limit or Free	S5 Post Height
S4	Lower Limit	S4 Post Height
S1	Upper Limit	Envelope waveform
T1	Upper Limit	Envelope waveform
T3	Lower Limit	T3 Post Height
T4	Lower limit or Free	T4 Post Height

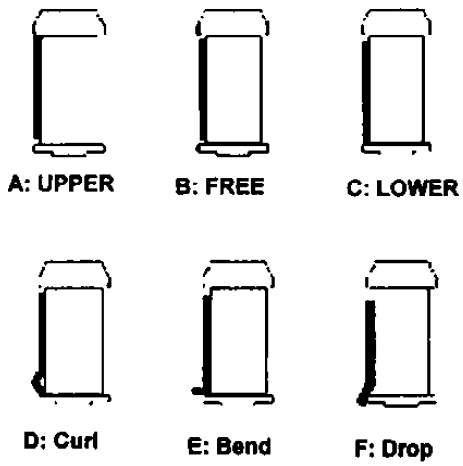

3.5.15. A/C Head Adjustment Method

Adjustment Item	SCREW	Adjustment Method	Torque
Tilt adjustment	A	Tighten direction…Decrease CUE Loosen direction…Increase CUE	
Height adjustment	B	Tighten direction…In case of increase CTL, when A/C Head Press down. Loosen direction…In case of increase CTL, when A/C Head lift up.	
Azimuth adjustment	F	Phase is adjusted by screw F	
X-value adjustment	C D	Adjust X-value by VFK0357 at Hole (E), then tighten the screw (C) and (D) to fix A/C Head horizontal position.	2.5Kg.cm
Fixed Tilt and Azimuth	G	Screw (G) is always tighten during adjustment except Tilt and Azimuth.	1.0Kg.cm
Fixed height	H	After height adjustment, tighten the screw (H) to fix height of A/C Head.	

SCREW	Tool for adjustment
A	VFK1178 (0.89mm Hex Driver)
B	VFK1150 (5.5mm Tool for adjustment)
F	VFK1148 (1.5mm Hex Driver)
C,D,G	VFK1209 (Torque Driver) VFK1375 (1.5mm Post Axis Driver)
H	VFK1190 (1.5mm L type of Hex Wrench)

1. Each adjustment of A/C Head should be perform under the screw (G) tightened.
2. Confirm the screw (A) does not loosen, before execute the A/C Head Tilt adjustment. The screw (A) should be always touch to top of A/C Head.
3. Be careful the tape damage at T3 Post, when adjust tilt of A/C Head.
4. When the height of A/C Head is adjusted by Nut (B), first the screw (H) should be loosen. And after height adjustment finished, tighten the screw (H) lightly.
5. Each adjustment of A/C Head should be finished at the condition of turn the each adjustment screw tighten direction. And hit the portion (L) lightly for remove the distortion.
6. Adjust alternately each A/C Head adjustment with Envelope

Waveform adjustment.

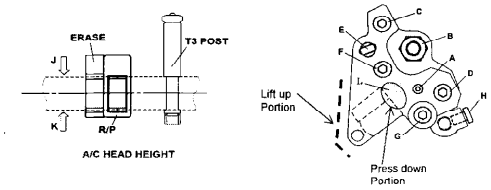

3.5.16. A/C Head Tilt Adjustment

SPEC	Lower limit at T3 Post No tape curl
ADJUSTMENT	SCREW A and G (A/C Head)
MODE	PLAY
TAPE	Blank Tape
M.EQ	VFK1148,VFK1178(Hex Driver)

1. Play back the tape and adjust screw(A) for adjustment of tilt of A/C Head so that the tape path has lower limit without curl at T3 post.
2. To adjustment, loosen the screw (G) and make curl on tape at lower flange of T3 post by screw (A). And tighten screw (A) accordingly for find the point of curl disappeared. After finish adjustment for screw (A), tighten the screw (G) is tightened with 1.0Kg/cm of torque.

Note:

1. In case of turn clockwise screw (A).
   → Tape goes up at T3 post.
   In case of turn counter-clockwise screw (A).
   → Tape goes down at T3 post.
2. When screw adjustment finished, with each adjustment screw on A/C Head should be finished tighten direction. And confirm that the screw does not loosen.
3. Adjust and confirmation should be performed alternately with each A/C head adjustment(Azimuth and Height).

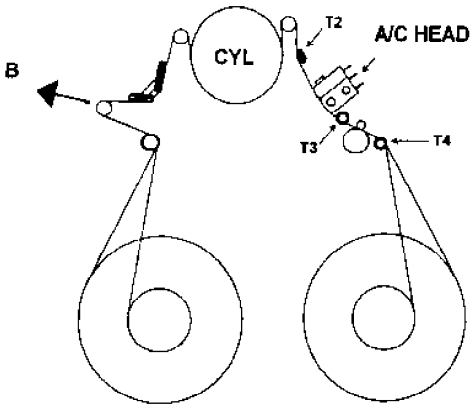

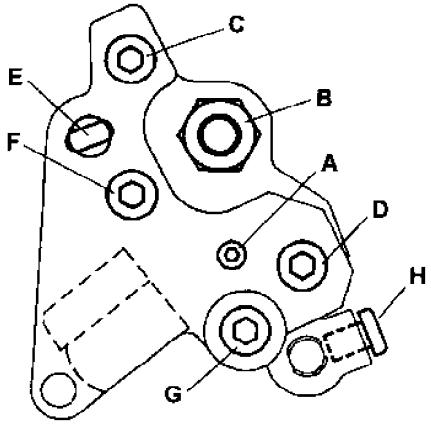

3.5.17. A/C Head Height adjustment

BOARD	**SERVO**
SPEC	**CTL Output (C1,C2≥1.8V)**
TEST POINT	**TP30:CTL**
ADJUSTMENT	**SCREW B and H (A/C Head)**
MODE	**PLAY**
TAPE	**NTSC: VFM3580KM (14min to 22min)** **PAL: VFM3680KM (14min to 22min)**
M.EQ	**Oscilloscope**
TOOL	**VFK1150(Nut Driver)** **VFK1190(Hex Wrench)**

1. Observe the CTL output (TP30) on the Servo board.

2. Press and Lift up to A/C Head lightly as indicated as figure position, then confirm that the CTL output level is decreased.

3. **If increases CTL output, when press the A/C Head. Loosen the screw H and adjust the screw B counterclockwise until CTL output is maximized.**
4. **If increases CTL output, when lift up the A/C Head. Loosen the screw H and adjust the screw B clockwise until CTL output is maximized.**
5. **After tightening the screw H (2.0kg), confirm the level again.**

Note:

1. **Adjust alternately with other A/C head adjustments(Azimuth, Height).**

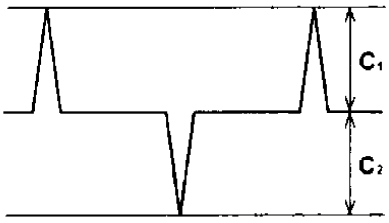

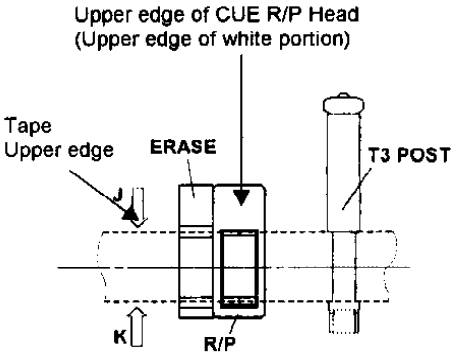

A/C HEAD HEIGHT

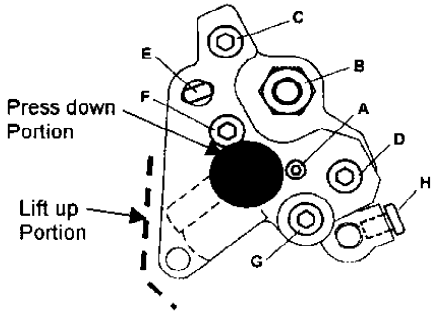

3.5.18. A/C Head Azimuth Adjustment

BOARD	SERVO
SPEC	CTL Output:C1,C2 = C1 max,C2 max
TEST POINT	TP30:CTL
ADJUSTMENT	SCREW F (A/C Head)
MODE	PLAY
TAPE	NTSC: VFM3580KM (14min to 22min) PAL: VFM3680KM (14min to 22mi)
M.EQ	Oscilloscope
TOOL	VFK1148(Hex Driver)

1. Observe the CTL output (TP30) on the Servo Board.
2. To adjustment, loosen the screw (G) and adjust screw (F) so that the CTL output become maximum.
3. Tighten screw (G) with 1.0Kg torque.

Note:

1. Adjust alternately with other A/C head adjustments(Azimuth, Height).

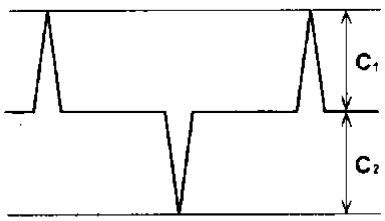

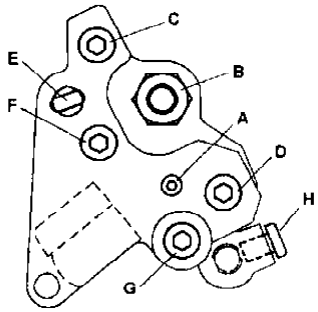

3.5.19. A/C Head Tilt Confirmation

SPEC	**A/Amax ≥ 0.8**
TEST POINT	**TP101:CUE AUDIO (CUE Board:H2)**
ADJUSTMENT	**SCREW A and G (A/C Head)**
MODE	**PLAY**
TAPE	**NTSC: VFM3580KM (14min to 22min)** **PAL: VFM3680KM (14min to 22min)**
M.EQ	**Oscilloscope**
TOOL	**VFK1178,VFK1148(Hex Driver)**

1. **Playback the Alignment tape.**
2. **Confirm that the screw G and H are not loosened.**
3. **Push the tension arm follow the arrow (B) direction as shown in figure as range of T2 post does not move. And confirm that the CUE output level is within specification.**
4. **If out of specification, loosen the screw G and adjust the screw A, then tighten the screw G with 1.0 kg torque.**
5. **The final touch of the adjustment must be turned clockwise. After this adjustment, confirm that the screw A is not loosened.**
6. **If adjust the screw A, Confirm that the tape pass condition follow Post Limit Confirmation procedure (item 5-14).**

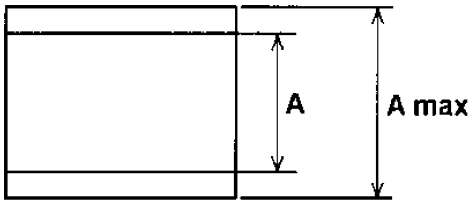

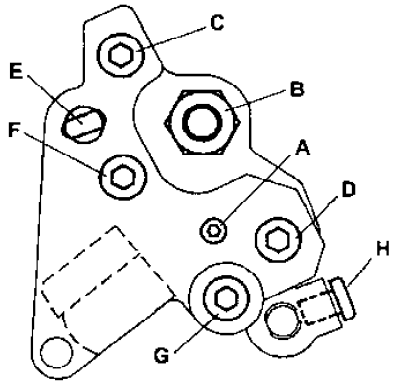

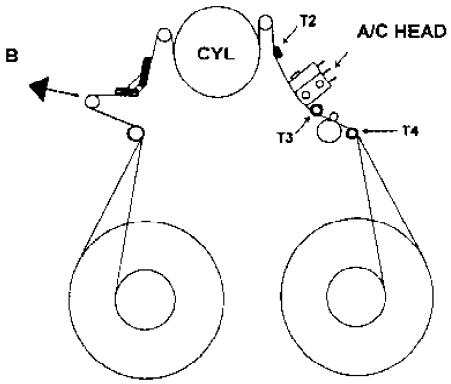

3.5.20. A/C Head Height Confirmation

SPEC	**A≥0.95×Amax, C1,C2 ≥ 1.8V**
TEST POINT	**TP101 CUE AUDIO (CUE Board:H2)** **TP30 CTL (SERVO Board:F1)**
ADJUSTMENT	**SCREW B and H(A/C Head)**
MODE	**PLAY**
TAPE	**NTSC: VFM3580KM (14min to 22min)** **PAL: VFM3680KM (14min to 22min)**
M.EQ	**Oscilloscope**
TOOL	**VFK1150(Nut Driver)** **VFK1190(Hex Wrench)**

1. **Playback the Alignment tape.**
2. **Press and Lift up to A/C Head lightly as indicated as figure position, then confirm that the CUE output level at TP101 does not increased.**
3. **If increases CUE output, A/C Head Height adjustment performed. And also confirm that the CTL output level.**
4. **If adjust the height of A/C Head, Azimuth also changed. Therefore adjust and confirm alternately Height and Azimuth of A/C Head.**
5. **After screw (H) is tightened, height and tilt of A/C Head are changed. Therefore confirmation of specification must be done after tightening the screw (H).**

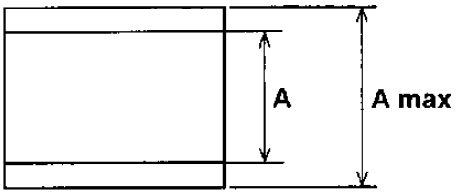

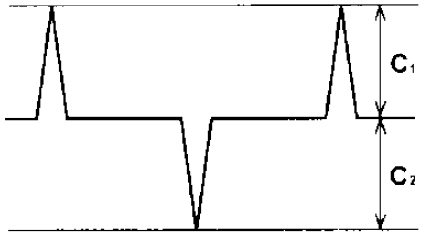

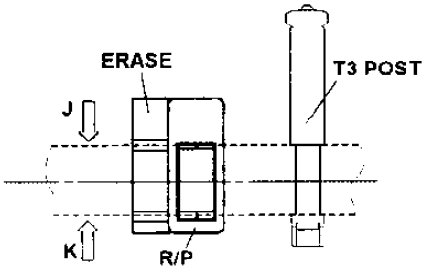

A/C HEAD HEIGHT

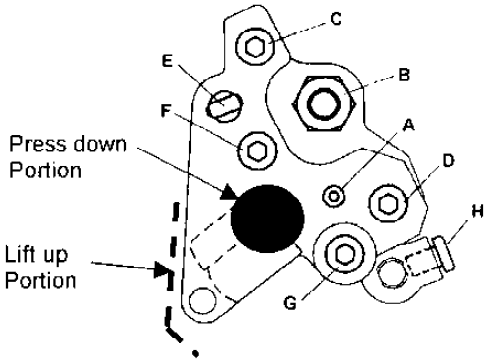

3.5.21. A/C Head Azimuth and X-value Adjustment.

SPEC.	As shown in below figure. 250us≤t1,t2≤+250us	TEST POINT	TP16 :RP ENV (RF AMP B TP233:RP HSW (SERVO E TP101:CUE AUDIO (CUE E TP30 :CTL (SERVO:F1)
ADJUSTMENT	A/C Head each screws		
MODE	PLAY SERVO ADJUST: A07:RP LINEAR P	M.EQ	Oscilloscope
TAPE	NTSC: VFM3582KM (X-value) PAL: VFM3682KM (X-value)	TOOL	VFK0357(Eccentric Screw

1. Open the Service menu and select the item “A07:RP LINEAR P” on Servo Adjust menu for RP Head ATF Playback.
2. Playback the X-value Alignment tape.
3. Confirm that the phase of CUE and CTL are within specification against RP HSW pulse trigger. If not perform the X-value adjustment follow the below procedure.
4. Adjust A/C Head Azimuth (refer to Azimuth adjustment procedure) so that the CTL and Lack part of CUE(t2) is match in the phase.
5. Confirm the lack track of envelope, and select the HSW correspond with it (The lack track is correspond HSW high with L ch).
6. Adjust X-value so that the reference of HSW and CTL trigger (CTL falling edge is the reference: refer to below figure) are match in the phase(t1). To adjust X-value, loosen the screw C and D, adjust the hole E by VFK0357. After adjustment tighten the screw C and D with 2.5Kg torque. At this time adjust the phase simultaneously with Azimuth so that the CTL and CUE phase is kept.
7. Hit the top plate (portion L as shown in below figure) of A/C Head lightly by a pointed end of Eccentric driver , then confirm the phase is not shifted finally.

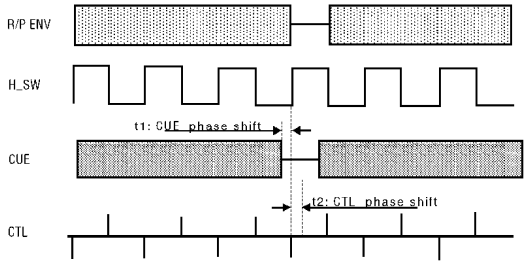

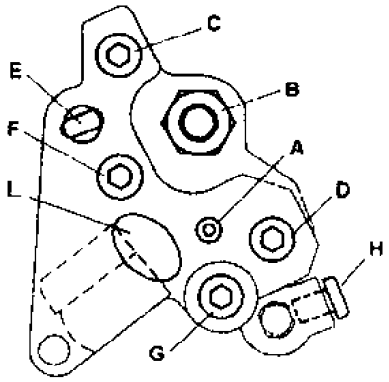

3.5.22. REV Tape Pass Confirmation and Adjustment (T4 post height adjustment)

SPEC.	C1,C2≥Cp1,Cp2×0.75 Lower limit at T3 post on REV mode	TAPE	NTSC: VFM3580KM PAL: VFM3680KM
TEST POINT	TP30(SERVO:F1)	M.EQ	Oscilloscope
ADJUSTMENT	T4 post height	TOOL	VFK1151(Nut Driver)
MODE	REV×1		

1. Place unit into REV mode, and confirm the post limit and CTL signal are in the specification. IF not, adjust T4 post follow the below procedure.
2. Turn the Nut of T4 post clockwise or counter-clockwise follow the tape limit condition at T3 post. The maximum rotation angle is 90 degree.
3. Place unit into REV X1 mode and confirm the CTL output level is become more than 75% on play mode. Confirm the tape pass limit become lower limit at T3 post and the tape does not have curl at T3 and T4 post.
4. However out of specification, adjust T4 post height follow the Post Height Pre-adjustment procedure.

T4 Nut adjustment direction

Direction of adjustment nut of T4 post	CTL level on REV mode	Lower limit at T3 post On REV mode
Tighten direction	Increase	Tape touch to strong
Loosen direction	Decrease	Tape touch to weak

Post Limit

Post Name	Tape limit					
	A	B	C	D	E	F
T3 Post	NG	NG	OK	NG	NG	NG
T4 Post	OK	OK	OK	NG	NG	NG

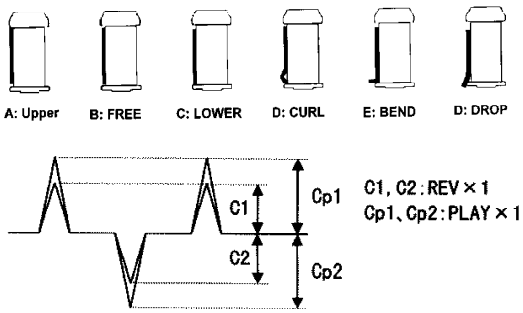

3.5.23. CTL Self Recording Level Confirmation

SPEC.	Refer to below table
TEST POINT	TP30 (SERVO Board)
MODE	REC and PLAY
TAPE	Blank tape
M.EQ	Oscilloscope

Note:

This confirmation should be done after each screws of A/C Head are fixed.

1. **Record the blank tape.**
2. **Playback the recorded portion and confirm the CTL level is within specification as shown as below table on PLAY and REV X1 mode.**

CTL Output Level C1,C2		
PLAY	REV×1	REV×0.2
C1,C2≥1.8V	C1,C2≥1.4V	C1,C2≥1.2V

1. **PLAY NG → Re-confirm the A/C Head height adjustment.**
2. **REV NG → Re-confirm the T4 post adjustment.**

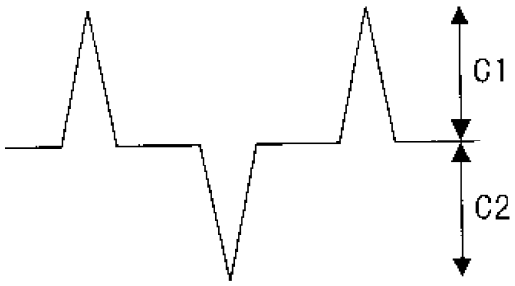

CTL Output Level C1,C2

3.5.24. PLAY Tape Pass Limit Confirmation

SPEC.	Each Post limit shown in table
MODE	PLAY
TAPE	M cassette (MP tape) tape. Tape beginning and end portion

Post Name	Tape Limit(Refer the figure)						Adjustment	
	A	B	C	D	E	F		
S5 post	NG	OK	OK	NG	NG	NG	S4,S5 Post	Post Height Pre-Adj.
S4 post	NG	NG	OK	NG	NG	NG		
S1 post	OK	NG	NG	NG	NG	NG	S1 Post	Envelope waveform Adj.
T1 post	OK	NG	NG	NG	NG	NG	T1 Post	Envelope waveform Adj.
T3 post	NG	NG	OK	NG	NG	NG	A/C Head tilt	A/C Head tilt Adj.
T4 post	NG	OK	OK	NG	NG	NG	T4 Post	Post Height Pre-Adj

1. Place unit into PLAY mode and confirm the each post limits is within specification.
2. If out of specification, adjust the post height follow the each adjustment procedure (Refer to above table).

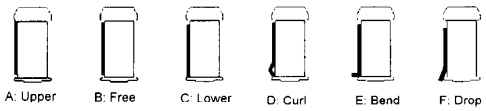

3.5.25. Confirmation of Envelope on REV,REW and FF mode.

SPEC.	V/Vmax ≥ 0.9
TEST POINT	TP16 :RP ENV (RF AMP Board:H4)
MODE	REV,REW,FF
TAPE	NTSC: VFM3580KM PAL: VFM3680KM
M.EQ	Oscilloscope

1. Confirm that the Envelope waveform becomes in the specification on REV,REW and FF mode as refer to figure and below.

   - Waveform must be Diamond Style.
   - All the peak level must be more than 90% of maximum level. / V/Vmax ≥ 0.9

2. If out of spec, adjust S4 post height.

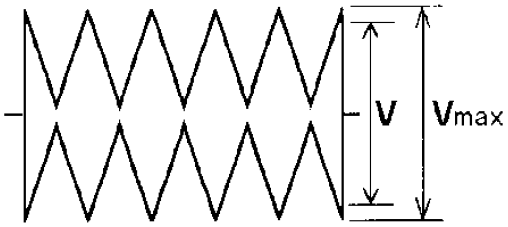

O K

N G

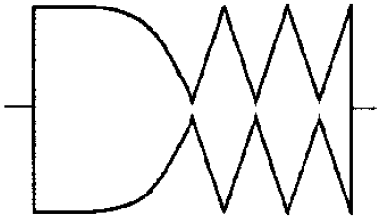

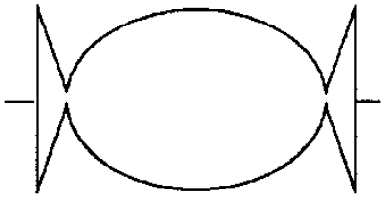

3.5.26. Confirmation of Play Start Envelope

TEST POINT	TP16:RP ENV (RF AMP Board:H1)
MODE	REW/REV → PLAY Loading completion → PLAY FF → PLAY
TAPE	L cassette(123min,Recorded tape) Tape beginning portion
M.EQ	Oscilloscope

Note:

This adjustment must be done after Envelope Waveform Adjustment.

1. **Confirm that the envelope appears immediately, when the mode is changed from REW to PLAY,REV to PLAY,FF to PLAY,and Lording to PLAY mode.**
2. **If out of spec, adjust S4 post height.**

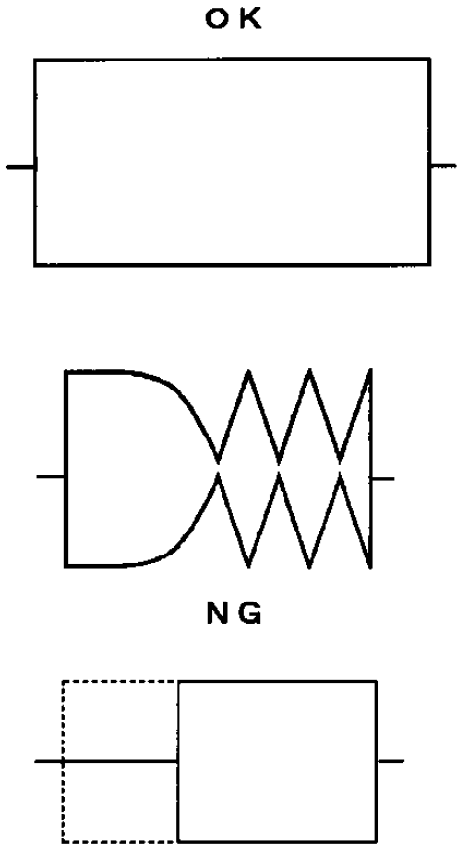

3.5.27. Tape Pass Limit Confirmation

SPEC	**Each Post limit shown in table.**
MODE	**REV**
TAPE	**M cassette (MP tape) tape. Tape beginning and end portion**

Post Name	Tape Limit(Refer to figure)					
	A	B	C	D	E	F
S5 Post	OK	OK	OK	NG	NG	NG
S4(Tension) Post	NG	OK	OK	NG	NG	NG
S1 Post	OK	NG	NG	NG	NG	NG
T1 Post	OK	OK	OK	NG	NG	NG
T3 Post	NG	NG	OK	NG	NG	NG
T4 Post	NG	NG	OK	NG	NG	NG

1. Place unit into REV mode and confirm the each post limits is within specification.
2. If out of specification, adjust the post height follow the each adjustment procedure (Refer to above table).

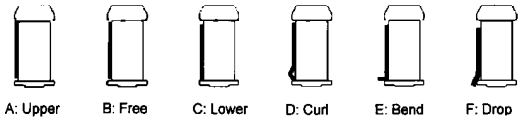

3.5.28. FF, REW Tape Pass Limit Confirmation

SPEC.	Each Post limit shown in table.
MODE	FF,REW
TAPE	M cassette (MP tape) tape. Tape beginning and end portion

Post Name	Tape Limit(Refer to figurte)					
	A	B	C	D	E	F
S5 Post	OK	OK	OK	NG	NG	NG
S4(Tension) Post	NG	OK	OK	NG	NG	NG
S1 Post	OK	NG	NG	NG	NG	NG
T1 Post	OK	OK	OK	NG	NG	NG
T3 Post	OK	OK	OK	NG	NG	NG
T4 Post	OK	OK	OK	NG	NG	NG

1. Place unit into FF and REV mode and confirm the each post limits is within specification.
2. If out of specification, adjust the post height follow the each adjustment procedure (Refer to above table).

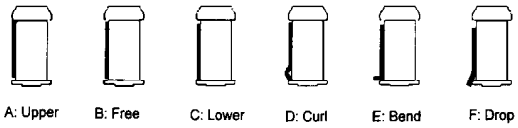

3.5.29. Screw Lock Tight of A/C Head and T3,T4 Post

[Screw Lock Tight of A/C Head]

	SCREW A	OTHER SCREW
Lock Tight Grew Quantity	1/3 of the screw	1/3 of the screw

1. Fix the screw by the Lock Tight Grew after adjustment..

2. Before adjustment melt the Grew.

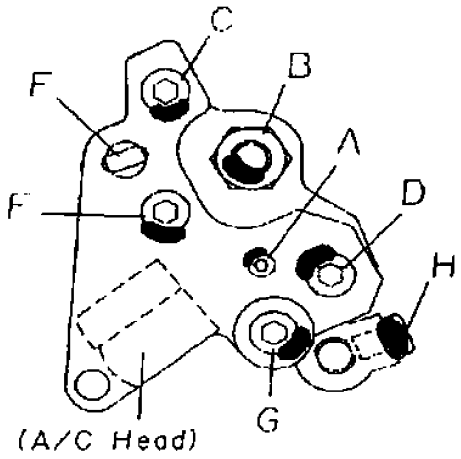

[Screw Lock Tight of T3 and T4 Post]

	T3 Post	T4 Post
Lock tight grew quantity	1/4 of the screw	1/4 of the screw

1. After adjustment, attach the lock tight grew at the Nylon nut..

2. Before adjustment, melt the Grew.

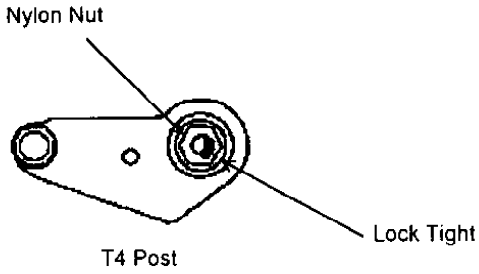

3.5.30. PG SHIFTER Adjustment

SPEC.	T1, T2 = 126.4 μ sec ± 2 μ sec.
MODE	PLAY
TEST POINT	TP320 SPA (SERVO Board:F1) TP233 R/P HSW (SERVO Board:F1)
ADJUSTMENT	A01:PG SHIFTER (EVR on SERVO ADJUST menu)
M.EQ	Oscilloscope
TAPE	NTSC: VFM3580KM PAL: VFM3680KM

1. Open the SERVO ADJUST menu on the Service menu and select the item “A01:T PG SHIFTER”.
2. Playback the Alignment tape.
3. Press the SEARCH button and keep it until the numerical value of “A01:PG SHIFTER” are renewed.
4. Connect the scope toTP233 and TP320. Trigger the scope by TP233. Then it is displayed as shown in figure.
5. Confirm that the period of T1 and T2 in specification (126.4 μ sec± 2 μ sec).

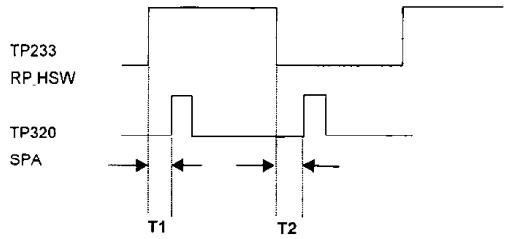

3.5.31. LISTA Adjustment Procedure.

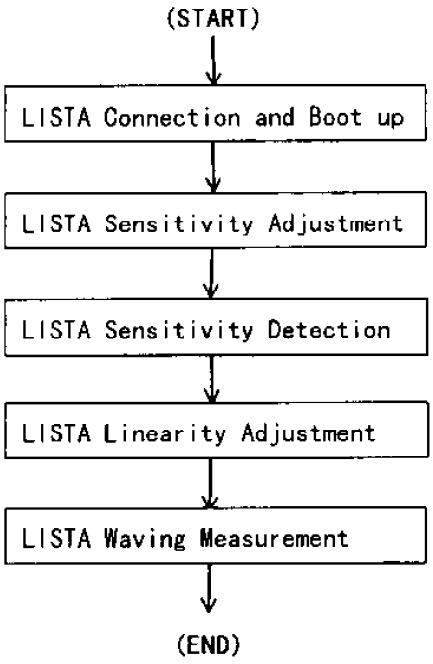

3.5.32. LISTA Connection and Boot Up

TEST POINT	TP321 ATF ERR (SERVO Board:F1) TP233 PB HSW (SERVO Board:F1) TP232 R/P HSW (SERVO:Board:F1) TG510 GND (SERVO Board:F1)
M.EQ	P/C (AD Board should be installed),Oscilloscope
TAPE	NTSC: VFM3581KM (LISTA) PAL: VFM3681KM (LISTA)
TOOL	VFK1481(LISTA Software),VFK1186(LISTA Cable)

1. Connect the LISTA Cable to A/D board on PC.

2. Connect the Clips of LISTA Cable to test point on Servo Board as follow as below.

(1).ATF: TP321 (ATF error)

(2).HSW: TP233 (HSW:RP) or TP232 (HSW:PB)

(3).GND: TG510 (GND)

CONNECTION

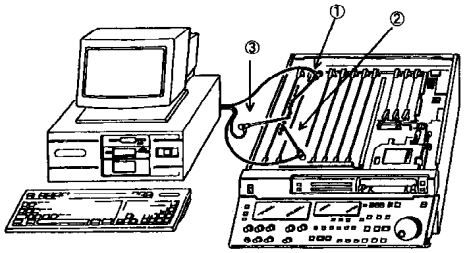

3. Boot up the LISTA software on DOS mode.

*** Install and Boot up.**
All files on the floppy disk (VFK1481) copy to created directly on PC(i.e. C:\LISTA).
Type "LISTA" and press ENTER Key, then boot up the LISTA software VFK1481

4. Select the item "DVCPRO" for format select on the menu.

5. Select the item "AJ-D850" for selected model on the menu.(AJ-D850 is equivalent to AJ-D850)

6. After selected model, appeared alignment tape data on the screen for select the Serial number on the alignment tape. But if LISTA software have not resisted data of alignment tape, press the ESC key, then main menu is display on the screen. And select item "<4> Alignment Tape" for entry the data on the attachment sheet, which is enclosed of alignment tape.

<How to Entry the Attachment Data of Alignment Tape>

1. Select the item "<4> Alignment Tape" on the main menu of the LISTA software.

2. Select the item "<2> ENTRY" on the alignment tape menu.

3. After display the screen of "<< Alignment tape Data Entry >>", first input the Serial number follow the printed number on the tape label. And input the number "0" or "1" for select the PAL/NTSC. And after that for entry the tape type, in case of DVCPRO input to "0" , in case of DV input to "1".

4. After select the Tape type, the frame for input the DATA and CHECK SUM appeared on the screen. Input the numerical value in numerical order on the data sheet, which are enclosed with alignment tape. If input the wrong number, appear the error message on the screen, then confirm that the data on the sheet.

5. After entry the data, select “<1> SELECT” on the Alignment Tape menu and select the serial number of the alignment tape.

<<Alignment Tape Data Entry>> Serial No.0596003(NTSC) 18um

[1]	-0.1
[2]	0.1
[3]	0.0
[4]	0.2
[5]	0.6
[6]	0.5
[7]	0.7
[8]	0.9
[9]	1.0
[10]	0.8

[11]	0.7
[12]	1.0
[13]	0.7
[14]	0.5
[15]	0.2
[16]	-0.5
[17]	-0.3
[18]	-0.3
[19]	-0.1
[20]	-0.6

[21]	-0.4
[22]	-0.2
[23]	-0.7
[24]	-0.6
[25]	-0.7
[26]	-0.3
[27]	-0.4
[28]	-0.4
[29]	-0.6
[30]	-0.3

[31]	-0.4
[32]	-0.6
[33]	-0.3
[34]	-0.2
[35]	-0.1
[36]	-0.3
[37]	-0.1

[CS]	-0.6

3.5.33. LISTA Sensitivity Adjustment (R/P Head)

SPEC.	Sensitivity:150±15 (mV/um)
MODE	PLAY
TEST POINT	TP321 ATF ERR (SERVO Board:F1) TP233 R/P HSW (SERVO Board:F1) TG510 GND(SERVO Board:F1)
ADJUSTMENT	A06:RP GAIN P (SERVO ADJUST)
TAPE	NTSC: VFM3581KM (LISTA) PAL: VFM3681KM (LISTA)

Note:

Before perform the Sensitivity adjustment, perform the PRE-EQ adjustment for adjust ENV Level (L/R) on RF AMP (H4) Board.(Refer to Sec. 4 :electrical adjustment).

1. Connect the Test Point to clip of LISTA cable for ATF Error signal measurement.
2. Open the SERVO ADJUST menu on Service menu and select the EVR “A06:RP GAIN P”.
3. Playback the LISTA alignment tape.
4. Select the “<6> ATF Error Signal Monitor” on the LISTA main menu and after appear the message “1.2% Speed...”, press

ENTER key, then sensitivity value as real time and waveform appear on the screen as shown as figure below.

5. Adjust EVR “RP GAIN P” so that the sensitivity value is within specification.
6. After finish this adjustment, press ESC key to exit to the main menu.

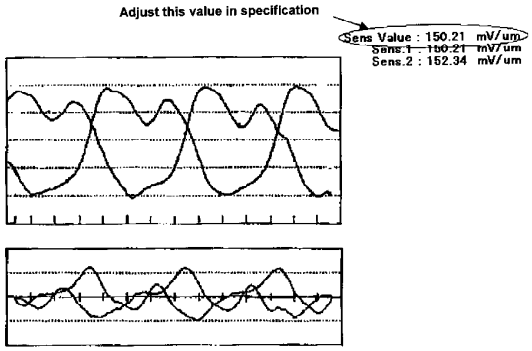

3.5.34. LISTA Sensitivity Detection (RP Head)

SPEC	Sensitivity:150±15 (mV/um)
MODE	PLAY
TEST POINT	TP321 ATF ERR (SERVO P.C.Board:F1) TP233 R/P HSW (SERVO P.C.Board:F1) TG510 GND(SERVO P.C.Board:F1)
ADJUSTMENT	——
TAPE	NTSC: VFM3581KM (LISTA) PAL: VFM3681KM (LISTA)

1. Open the SERVO ADJUST menu on Service menu and select the EVR “A06:RP GAIN P”.
2. Playback the LISTA alignment tape.
3. Select the “<1>Sensitivity Measurement” on the LISTA main menu and after appear the message “1.2% that Speed...”, press ENTER key, then LISTA software start measurement of sensitivity value.
4. Confirm the sensitivity value is within specification, when the message << Sensitivity Measurement Finish>> and “Sensitivity = numerical value” are displayed on the screen.
5. If out of specification, repeat the steps 3 and 4.
6. If still out of specification, perform the “LISTA Sensitivity

Adjustment again.

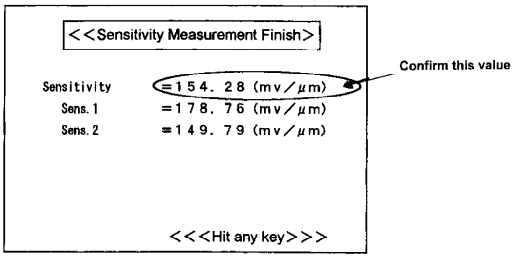

3.5.35. LISTA Linearity Adjustment and Waving Measurement.

SPEC	**Linearity: Less than 3um, Waving: Less than 1.5um**
MODE	**PLAY (EVR is select to "A07: RP LINEAR P")**
TEST POINT	**TP321 ATF ERR (SERVO Board:F1)** **TP233 R/P HSW(SERVO Board:F1)** **TG510 GND (SERVO Board:F1)**
ADJUSTMENT	**S1 and T1 Post Height**
TAPE	**NTSC: VFM3581KM (LISTA)** **PAL: VFM3681KM (LISTA)**

1. **Open the SERVO ADJUST menu on Service menu and select the EVR "A07: RP LINEAR P"**
2. **Playback the LISTA alignment tape.**
3. **Select the item "(2) Linearity Measurement" on the LISTA main menu and display the linearity waveform.**
4. **When the waveform as shown as below figure is displayed on the screen, press the "BS (back space)" key for display the waveform to center of scale on the screen. And adjust height of S1 and T1 post by Post Driver so that the linearity waveform is become flat as possible, and it should be in the specification.**
   *** Adjust linearity waveform in the red dot line on the screen.**

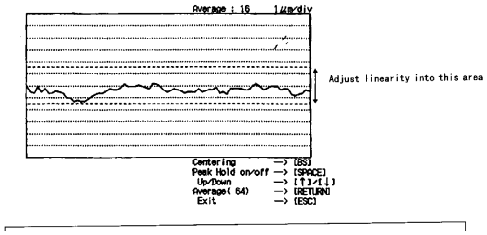

*** POINT:**

The part of left side of waveform(entrance side) is adjusted by height of S1 post and part of right s of waveform(exit side) is adjusted by height of T1 post.

Lower part of above waveform of figure is displayed lead on Cylinder.

When the post driver is remove from upper part of post, linearity waveform is changed.

After finish this adjustment, eject the tape and insert the tape again for confirm the shape of linear waveform does not changed.

5. After finish the linearity adjustment, measure the numerical value of linearity and waving.

***[Waving Measurement]**

1. **Press “SPACE” key for make the Peak Hold during 30 seconds, when linearity is displayed.**
2. **After finish the Peak Hold, press “SHIFT” and “}”,key simultaneously on the Key Board, then display the numerical values of “Linearity” and “Waving” on left lower portion of screen. And confirm the numerical values are in the specification. Also confirm the range of waving waveform is same quantity from entrance side to exit side. If the “Linearity” and “Waving” are out of specification and it caused by not enough limit of entrance or exit side of envelope, then adjust height of S1 and T1 post.**
3. **After this measurement is finished, press ESC key for return to main menu.**

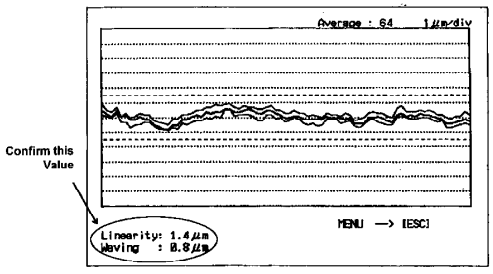

***NOTE: Saving of LISTA Data**

The LISTA software can be saved linearity waveform and measurement value of linearity and waving as one file data to PC.

1. **Basically this operation should be performed after linearity and waving measurement finished.**
2. **Select the item “(3) Data Save/Load ” on the LISTA main menu.**

And after open the menu select the item “<1> Save”.

3. **The linearity waveform as Peak Hold displayed on the screen. And after appeared message “File Name?” on the screen, entry the File Name and Comment. File Name must be in 8 characters, and comment is must be in 20 characters. As comment, entry the Serial Number, VTR Model Number and Head Rotation Hours etc, for use management of linearity data of each VTR.**
4. **After completion of saving, select the item “<2> Load” on the “(3) Data Save/Load” menu, then appear the saved File Name on the screen. And select it previous saved file for confirm the waveform and numerical value displayed correctly. By press “SHIFT” and “}”,key simultaneously on the Key Board., then display the numerical values of “Linearity” and “Waving” on left lower portion of screen.**

3.5.36. LISTA Sensitivity Adjustment (PB HEAD)

SPEC.	Sensitivity:150±15 (mV/um)
MODE	PLAY
TEST POINT	TP321 ATF ERR (SERVO Board:F1) TP232 PB HSW(SERVO Board:F1) TG510 GND (SERVO Board:F1)
ADJUSTMENT	A04:PB GAIN P
TAPE	NTSC: VFM3581KM (LISTA) PAL: VFM3681KM (LISTA)

1. **Connect the Test Point to clip of LISTA cable for ATF Error signal measurement.**
2. **Open the SERVO ADJUST menu on Service menu and select the EVR “A04:PB GAIN P”.**
3. **Playback the LISTA alignment tape.**
4. **Select the “<6> ATF Error Signal Monitor” on the LISTA main menu and after appear the message “1.2% Speed...”, press ENTER key, then sensitivity value as real time and waveform appear on the screen as shown as figure below.**
5. **Adjust EVR “A04 PB GAIN P” so that the sensitivity value is**

within specification.

6. After finish this adjustment, press ESC key to exit to the main menu.

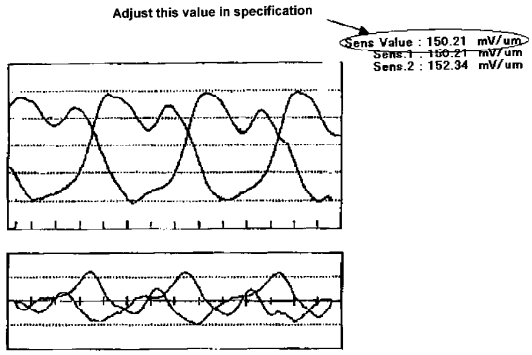

3.5.37. LISTA Sensitivity Adjustment (DV Compatibility)

SPEC.	Sensitivity:130±30 (mV/um)
MODE	PLAY
TEST POINT	TP321 ATF ERR (SERVO Board:F1) TP233 PB HSW(SERVO Board:F1) TG510 GND (SERVO Board:F1)
ADJUSTMENT	A08:RP GAIN
TAPE	NTSC: VFM3581KM (LISTA) PAL: VFM3681KM (LISTA)

1. Connect the Test Point to clip of LISTA cable for ATF Error signal measurement.
2. Open the SERVO ADJUST menu on Service menu and select the EVR “A08:R/P GAIN”.
3. Playback the LISTA alignment tape.
4. Select the “<6> ATF Error Signal Monitor” on the LISTA main menu and after appear the message “1.2% Speed...”, press ENTER key, then sensitivity value as real time and waveform appear on the screen as shown as figure below.
5. Adjust EVR “A08 R/P GAIN” so that the sensitivity value is within specification.
6. After finish this adjustment, press ESC key to exit to the main menu.

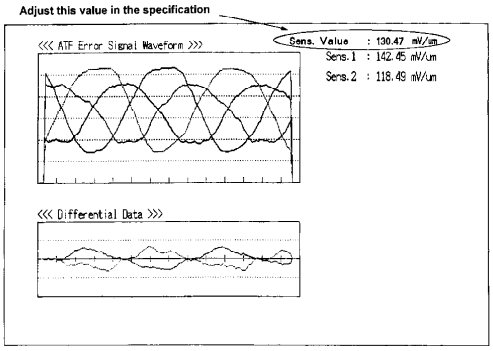

3.5.38. Self-Recording Playback Envelope Waveform Confirmation

SPEC	**V1/Vmax,V2/Vmax,V3/Vmax ≥ 0.8**
TEST POINT	**TP16:R/P ENV (RF Board:H4)** **TP1 :TRIG/RP HSW (RF Board:H4)**
ADJUSTMENT	**S1 and T1 Post Height**
MODE	**PLAY**
TAPE	**Blank Tape**
M.EQ	**Oscilloscope**
TOOL	**VFK1149(Post Driver)**

1. **Record the color bar signal.**
2. **Play back the recorded portion and confirm that the envelope output is within specification**
3. **If out of specification, perform the Envelope Waveform and LISTA adjustment again.**

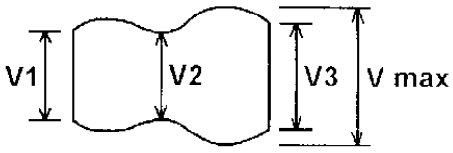

3.6. Mechanical Parts Replacement and Adjustment Procedures

GENERAL

When mechanical parts are replaced, pay attention to the following notes.

1. **Turn power off before replacing any part.**
2. **If any adjustment is required after replacing parts, perform the**

required adjustments.

3. Use proper fixture tools.
4. Make sure to clean the parts after replacement, Also when the mechanical parts are replaced, follow the replacement procedure.

3.6.1. Cylinder Unit Replacement

(Removal)

1. Remove the T1 Guide and Cleaning Arm Unit (Refer to item 11-8).
2. Disconnect the connector P5002 and P5003 on the Head Buffer board. And remove the screw, which is fixed with flexible cable.

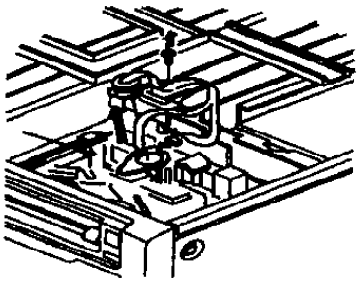

Fig. 6-1-1

Note:

Be careful when removing the flexible cable from the connector. Refer to the way to remove the connector as shown in Figure 6-1-2.

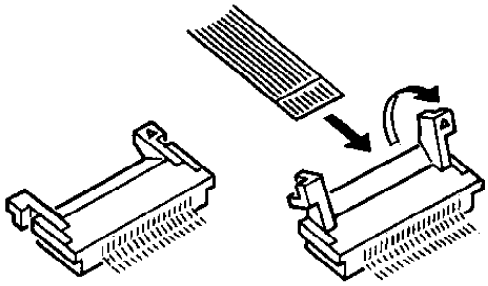

Fig. 6-1-2

3. Disconnect the connector P33 on Mech I/F P.C.Board at bottom of VTR. Then remove 3 screws (with spring) from the Cylinder unit, and remove the Cylinder unit without touching any mechanical part.

Note:

Do not touch the cylinder surface by finger directly.

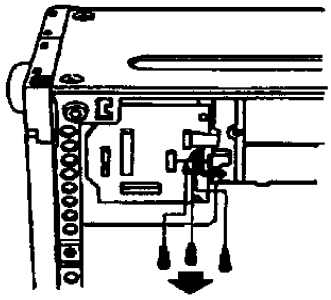

Fig. 6-1-3

(Installation)

1. **Install a Cylinder unit as reverse order of its removal.**

   Note:

   Set the Mechanical Chassis pins are matched with the specified cylinder holes on the bottom of the cylinder.

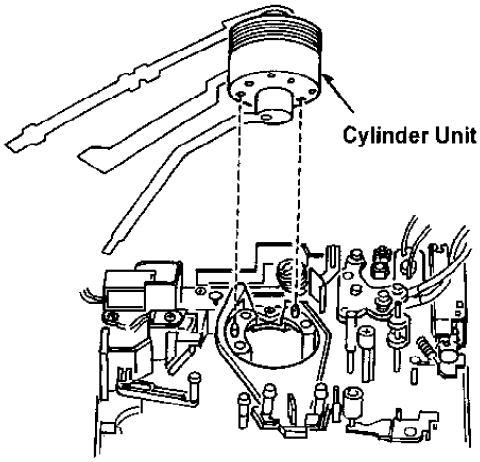

Fig. 6-1-4

2. **After installing T1 Guide, T1 Guide position adjustment is necessary (Refer to adjustment procedure of item 6-1-2).**

3.6.1.1. Cleaning Arm Unit Replacement

(Removal)

1. **Unscrew the 2 screws (A) to remove the T1 Guide as shown in Figure 6-1-5.**
2. **Pick up the tip portion (B) of Cleaning Arm Unit and remove the spring from Cleaner Arm Unit. Then remove the Cleaning Arm Unit as shown in Figure 6-1-5.**

(Installation)

1. **Install the cleaning Arm Unit, then hang the spring on Cleaning Arm Unit.**
2. **Install the T1 Guide and tighten 2 screws (A).**
3. **Press the iron core of the Cleaner Solenoid and confirm that the Cleaner Roller is rotated when the cylinder is rotated.**
4. **T1 Guide position adjustment should be performed.**

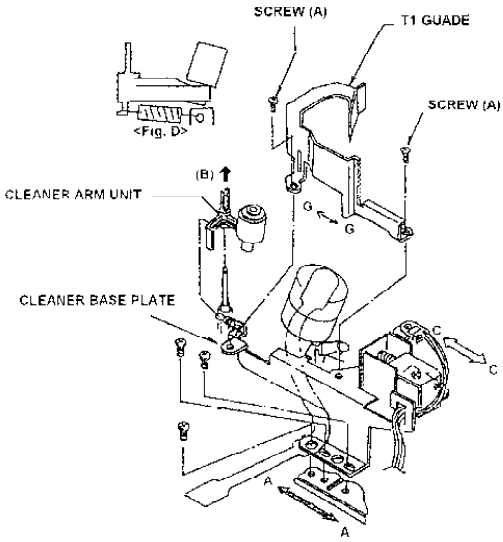

Fig. 6-1-5

3.6.1.2. T1 Guide Position Adjustment

Place the unit in Loading completion mode without tape.

< How to Make the No Tape Loading >

- **Open the “SERVO ADJUST” menu in the Service menu.**
- **“Select the item “T TORQUE” and press the Search button for making the loading condition. And turn power to off.**

1. **Observe the clearance (B) between T1 Guide and T1 post as shown in Figure 6-1-6. And make sure that it is within 0.2 to 0.5mm .**
2. **If not, loosen the 2 screws (A) and adjust the position of T1 Guide by moving to arrow direction (G□G) so that the clearance (B) is within specification. And tighten the 2 screws (A).**

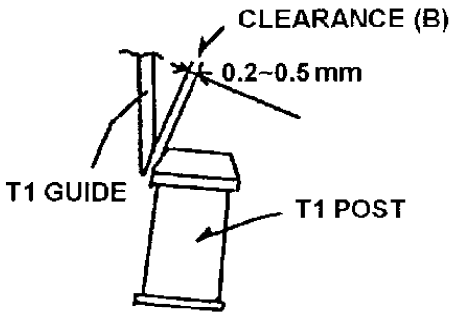

Fig. 6-1-6

3.6.1.3. Adjustment Flow Chart after Cylinder Unit Replacement

1. Adjust following items after Cylinder Unit replacement.

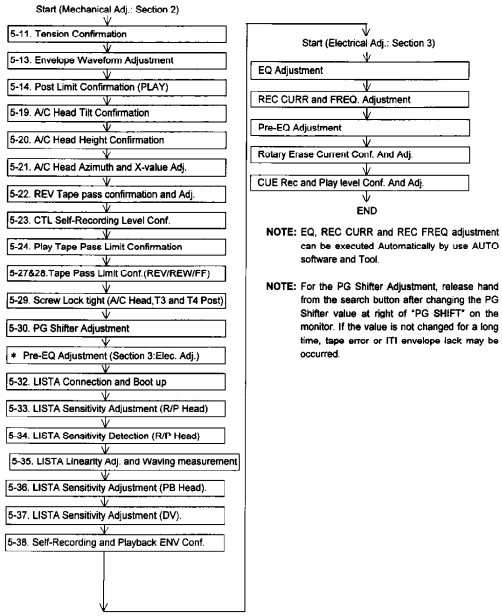

Note:

EQ, REC CURR and REC FREQ adjustment can be executed Automatically by use AUTO software and Tool.

Note:

For the PG Shifter Adjustment, release hand from the search button after changing the PG Shifter value at right of "PG SHIFT" on the monitor. If the value is not changed for a long time, tape error or ITI envelope lack may be occurred.

3.6.2. A/C Head Replacement

3.6.2.1. Replacement

***Required tools:**
Nut Driver (5.5m/m)(VFK1150)
Hex Driver (VFK1148)
Hex Wrench (VFK1190)

(Removal)

1. **Remove the Top Plate.**
2. **Loosen the hex. screw (B) and remove the Nut (C). Pick up the Head Height Adjustment Spring and then remove the A/C Head Unit as shown in Figure**

   Point:

   Memorize the height of Nut (C) before removing the Nut (C),

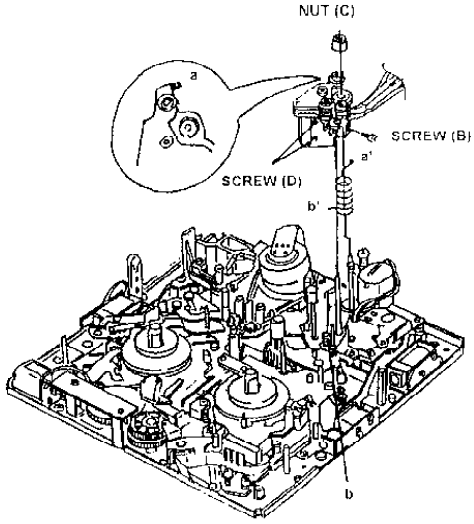

Fig. 6-2-1

3. **Remove the 2 screws (A). and disconnect the 2 connectors P1 on the A/C Head I/F P.C.Board and P30 on the Mech I/F P.C.Board, and then remove the A/C Head from the A/C Head Plate.**
4. **Remove 2 screws (D) to remove the Shield Cover as shown in Figure 6-2-1.**
5. **Unsolder the lead wires as shown in Figure 6-2-3.**

Note:

When unsolder the lead wires, do not unsolder all at the same time.)

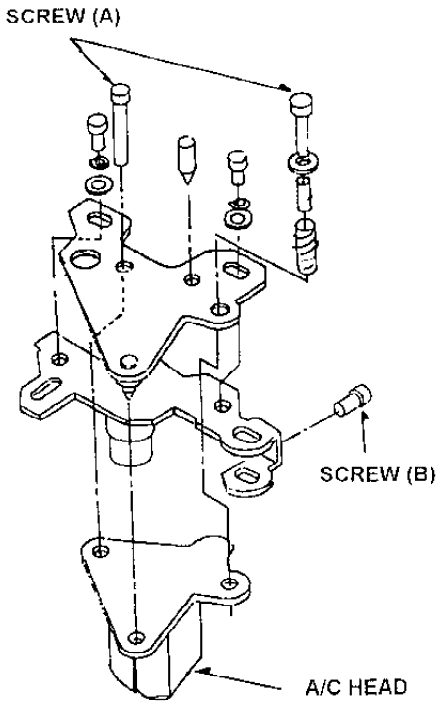

Fig. 6-2-2

(Installation)

1. **Remove the Shield Case from the New A/C Head and solder the lead wires to New A/C Head (Refer to Figure 6-2-3).**
2. **Re-install the shield case to A/C Head.**
3. **Install the A/C Head to A/C Head Plate and tighten 2 screws (A) so that A/C Head is parallel to A/C Head Plate.**
4. **Install the A/C Head Unit.**
5. **Put on the Head Height Adjustment Spring and tighten the Nut (C).**
6. **Clean the surface of the A/C Head.**
7. **Perform the A/C Head adjustment.**

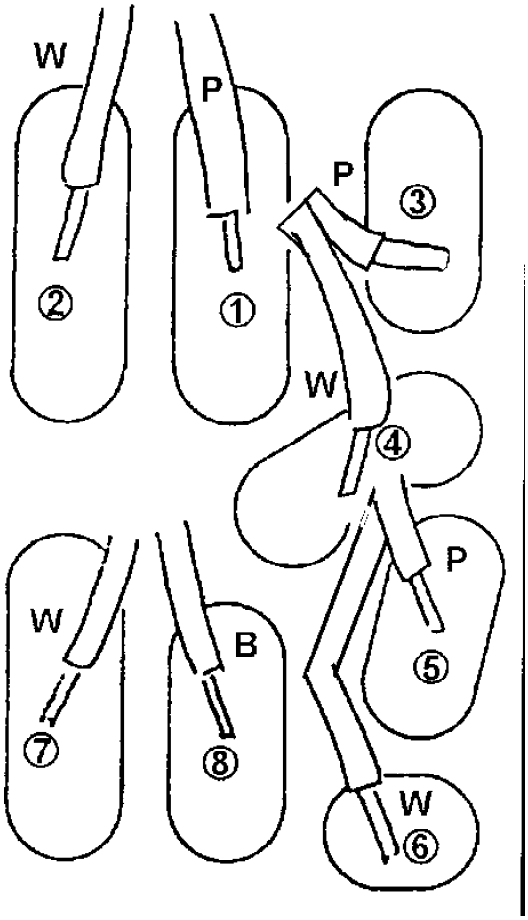

Fig. 6-2-3

A/C Head Side	Cable Color		Connector No.
1	PINK	YELLOW	P1
2	WHITE		
3	PINK	RED	
4	WHITE		
5	PINK	GREEN	
6	WHITE		
7	WHITE	YELLOW	P30
8	BLACK		

3.6.2.2. Adjustment Flowchart After A/C Head Replacement

1. **After installing, Mechanical and Electrical Adjustments should be performed.**

   Note:

   The hex screw (B) is kept loose until the A/C Head Height Adjustment is completed.

2. **After replacing the A/C Head, perform the following steps.**

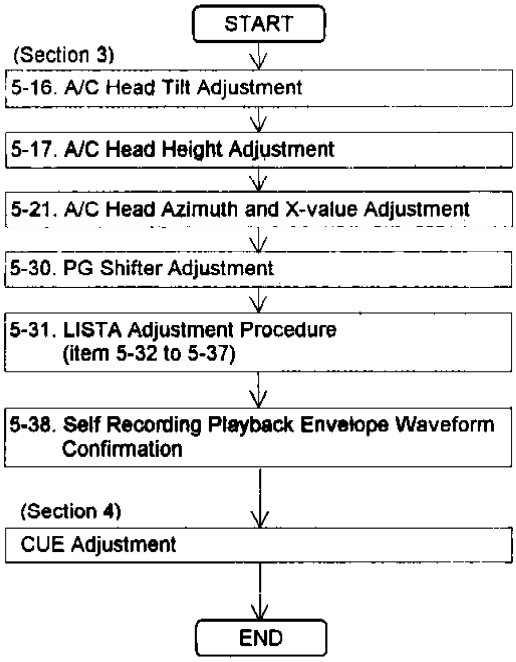

3.6.3. Supply Reel Rotor Unit and Take Up Reel Rotor Unit Replacement

(Removal)

1. **Remove the Top Panel (Refer to item [2-1. Removal of Top Panel]).**
2. **Remove the Front Loading Unit (Refer to item [2-5. Removal of Front Loading Unit]).**
3. **Remove the Bottom Panel (Refer to item [2-2. Removal of Bottom Panel]).**
4. **Disconnect the connector P34 and P35 on the Mech I/F P.C.Board as shown in Figure 6-3-1.**
5. **Move the S1 post to loading direction by manual ejecting method until the screw (C) can removing position.**
6. **Confirm the supply and Take Up Brake are not release.**
7. **Press the iron core of M stopper solenoid to release the M stopper.**
8. **Remove the 4 screws (C), (D) and (E) as shown in Figure 6-3-2.**
9. **Remove the Supply and Take Up Reel Rotor Unit and Reel Outer Rail.**

Note:

Memorized the groove position of Reel Base, which inserted the pin of Drive Arm Unit.

(Installation)

1. **Through in the Reel Outer Rail to New Supply and Take Up Reel Rotor Unit.**
2. **Hang on the Reel Rotor Unit to Reel Inner Rail and Install the Reel Rotor Unit then the pin of Drive Arm Unit should be matched with groove position of Reel Base as shown in Figure 6-3-3.**
3. **Install the 4 screws (C), (D) and (E).**
4. **Confirm that the Reel Rotor Unit moving smoothly on the Rail by hard.**
5. **Move the Reel Rotor Unit to front side by hand and then pull up the iron core of M stopper solenoid for operating M stopper.**
6. **Set the unloading condition by turn the Emergency shaft counter-clockwise.**
7. **Connect the Flexible Cable to Connector P34 and P35 on the Mech I/F P.C.Board.**
8. **Adjust the Motor Torque Offset value (Refer to item 1-1 of section 3).**
9. **Confirm that the Tension value on playback mode (Refer to item 5-11).**

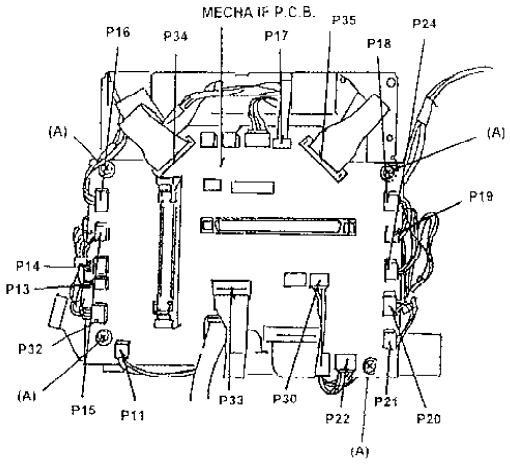

Fig. 6-3-1 Connection of S & T Reel Rotor Unit

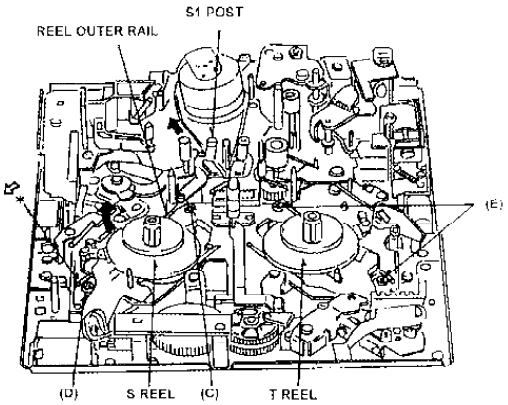

Fig. 6-3-2 Removal of S & T Reel Rotor Unit

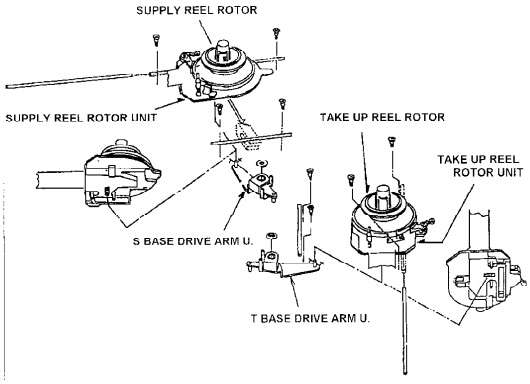

Fig. 6-3-3 Installation of S & T Reel Rotor Unit

3.6.4. Supply and Take Up Brake Arm Unit Replacement

(Removal)

1. **Remove the Top Panel.**
2. **Remove the Front Loading Unit.**
3. **Press the iron core of Brake Solenoid for release the Brake.**
4. **Remove the cut washers (A) and remove the supply and Take Up Brake Arm Unit as shown in Figure 6-4-1.**

(Installation)

1. **When install the new Brake Arm Unit first, hang on the Brake Arm Spring as shown in Figure 6-4-1.**
2. **Follow the previous steps in reverse order.**
3. **Main Brake Torque confirmation is required (Refer to item 5-3).**
4. **Confirm that the Tension value on the Playback mode (Refer to item 5-11).**

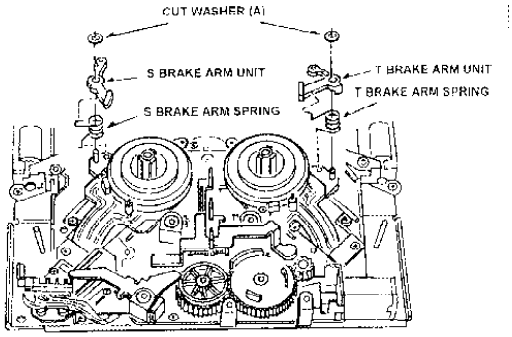

Fig.6-4-1 Removal of S & T Break Arm Unit

3.6.5. Supply Brake Solenoid Replacement and Adjustment

(Removal)

1. **Remove the Top Panel.**
2. **Remove the Front Loading Unit.**
3. **Remove the Bottom Panel.**
4. **Disconnect the connector P15 on the Mech I/F P.C.Board as shown in Figure 6-3-1.**
5. **Unscrew the 2 screws (A) and remove the Supply Brake Solenoid Base Unit as shown in Figure 6-5-1.**
6. **Unscrew the 2 screws (B) and remove the supply Brake Solenoid from Supply Brake Solenoid Base Unit as shown in Figure 6-10-1.**

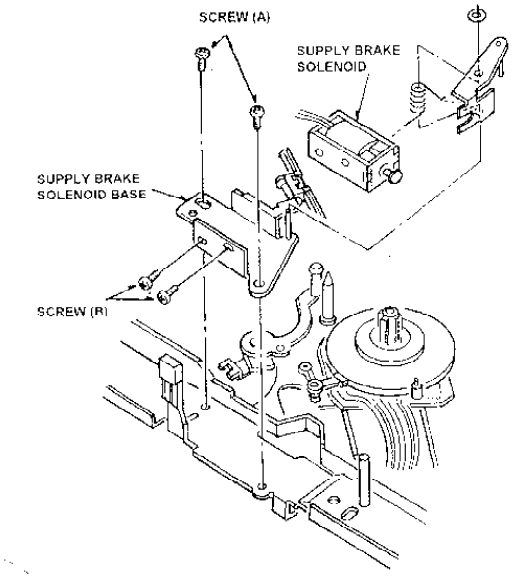

Fig. 6-5-1 Removal of Supply Brake Solenoid

(Installation)

1. **Install the new supply Brake Solenoid follow the removal steps in reverse order.**
   Note:
   Hang on the Supply Brake Spring as shown in Figure 6-6-1.
2. **Adjustment is required after installation.**

(Adjustment)

1. **Place the reels in the M cassette size position.**
2. **Observe the clearance (A) between Brake pad and it's turntable as shown in Figure 6-5-2. And make sure that it is within 0.2 to 0.5mm.**
3. **If not, loosen the 2 screws (A), which fixed supply and Take Up Brake Solenoid Unit. And adjust the position of Brake Solenoid Unit by moving arrow direction so that the clearance (A) is within specification. And tighten the 2 screws (A).**
4. **After adjustment, change the reel position to S and L cassette size, and confirm that the clearance (A) is within specification.**

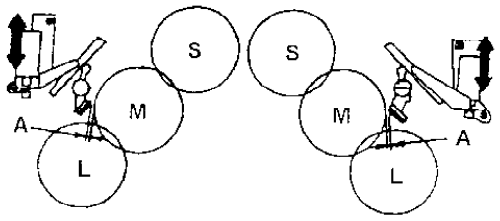

Fig.6-5-2 Brake Solenoid Adjustment

3.6.6. Take Up Brake Solenoid Replacement and Adjustment

(Removal)

1. **Remove the Top Panel.**
2. **Remove the Front Loading Unit.**
3. **Remove the Bottom Panel.**
4. **Disconnect the connector P18 on the Mech I/F P.C.Board. as**

shown in Figure 6-3-1.

5. Unscrew the 2 screws (A) and remove the Take Up Brake Solenoid Base Unit as shown in Figure 6-6-1.
6. Unscrew the 2 screws (B) and remove the Take Up Brake Solenoid from Take Up Brake Solenoid Base Unit as shown in Figure 6-6-1.

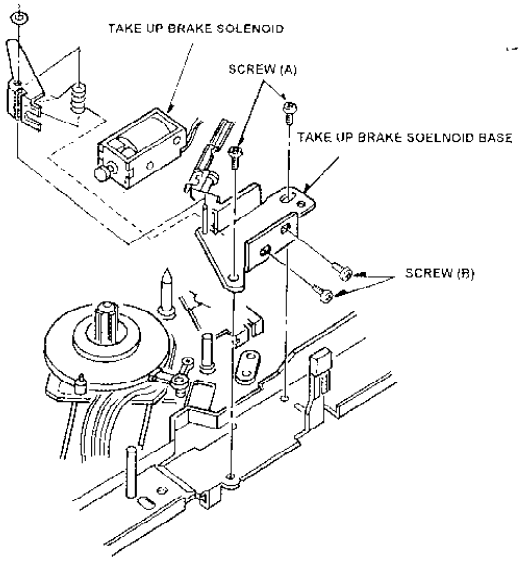

Fig.6-6-1 Removal of Take Up Brake Solrnoid

(Installation)

1. Install the new Take up Brake Solenoid follow the removal steps in reverse order.

   Note:

   Hang on the Take up Brake Spring as shown in Figure 6-6-1.
2. After installation, position adjustment should be performed as follows.

(Adjustment)

Please adjust the position of Take up Brake Solenoid Unit follow the adjustment procedure, which is described item 6-5.

3.6.7. Pinch Solenoid Replacement

(Removal)

1. Remove the Top Panel.

2. Remove the Front Loading Unit.
3. Remove the Bottom Panel.
4. Disconnect the connector P20 on the Mech I/F P.C.Board as shown in Figure 6-3-1.
5. Unscrew the 2 screws (A) and remove the Pinch Solenoid Unit as shown in Figure 6-7-1.
6. Unscrew the 2 screws (B) and remove the Pinch Solenoid Angle as shown in Figure 6-7-1.
7. Unscrew the 2 screw s (C) and remove the Pinch Solenoid from the Pinch Solenoid Base.

(Installation)

1. Install the new Pinch Solenoid follow the removal steps in reverse order.
2. After installation, Pinch Solenoid Position Adjustment is required (Refer to item 5-2).

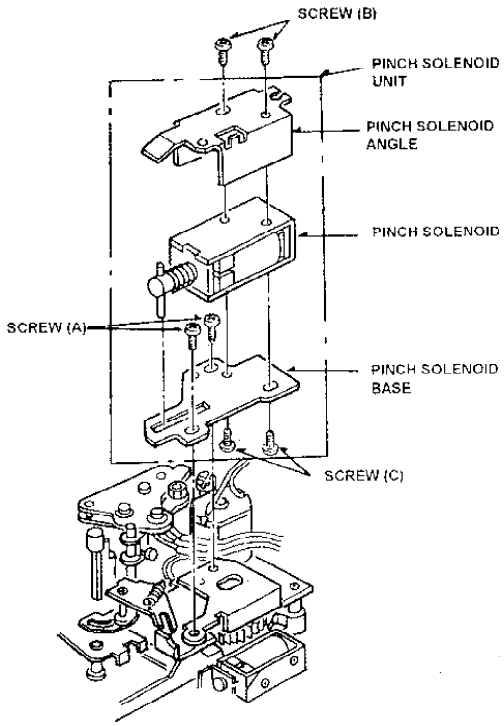

Fig.6-7-1 Removal Pinch Solenoid

3.6.8. Pinch Arm Unit Replacement

(Removal)

1. **Remove the Top Panel.**
2. **Remove the Front Loading Unit.**
3. **Remove the Bottom Panel.**
4. **Disconnect the connector P20 on the Mech I/F P.C.Board as shown in Figure 6-3-1.**
5. **Remove the Pinch Solenoid Unit (Refer to item 6-9, then hang off the Pinch Solenoid Lever as shown in Figure 6-8-1.**
6. **Remove the cut washer (A) and remove the Pinch Solenoid Lever as shown in Figure 6-8-1.**
7. **Remove the cut washer (B) and remove the Pinch Arm Unit as shown in Figure 6-8-1.**

(Installation)
Install the new Pinch Arm Unit follow the removal steps in reverse order then Pinch Solenoid Position Adjustment is necessary (Refer to item 5-2).

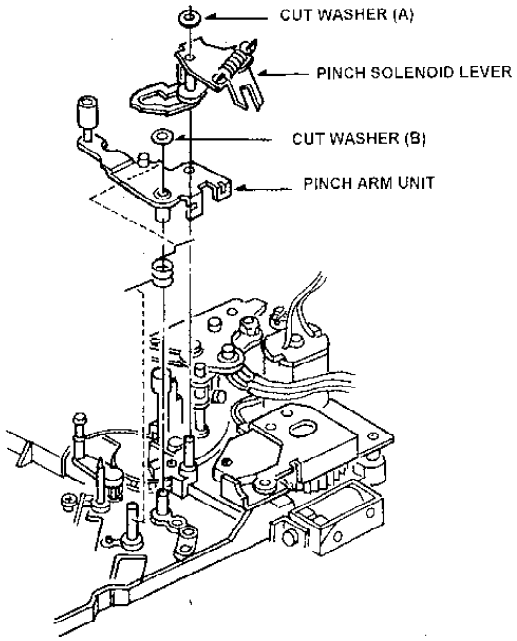

Fig.6-8-1 Removal of Pinch Arm Unit

3.6.9. Loading Motor Unit Replacement

(Removal)

1. **Remove the Top Panel.**
2. **Remove the Front Loading Unit.**
3. **Remove the Bottom Panel.**
4. **Disconnect the connector P21 on Mech I/F P.C.Board as shown in Figure 6-3-1.**
5. **Remove the Pinch Solenoid Unit (Refer to item 6-7).**
6. **Remove the Pinch Solenoid Lever. (Refer to item 6-8).**
7. **Unscrew the screw (B), and remove the Emergency Shaft as shown in Figure 6-9-1.**
8. **Unscrew the 2 screws (C) and remove the Loading Motor Neutral Unit as shown in Figure 6-9-1.**
9. **Unscrew the 2 screws (D) and remove the Loading Motor Unit as shown in Figure 6-9-1.**

(Installation)

1. **Install the new Loading Motor Unit to Loading Motor Neutral Unit by tightening 2 screws (D).**
2. **Install the Loading Motor Neutral Unit by tightening the 2 screws (C), then be careful that the pin of Mode SW Unit should be matched to groove position of main Cam Gear.**
3. **Install the Emergency Shaft by tightening the screw (B).**
4. **Install the Pinch Solenoid Unit and after installation it, Pinch Solenoid Position adjustment is required. (Refer to item 5-2).**
5. **Connect the connector P21 on the Mech I/F P.C.Board. as shown in Figure 6-3-1.**

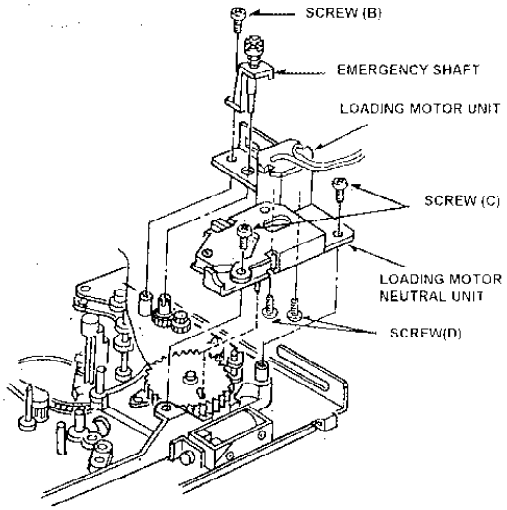

Fig. 6-9-1 Removal of Loading Motor

3.6.10. Mode Select Switch Unit Replacement

(Removal)

1. **Remove the Top Panel.**
2. **Remove the Front Loading Unit.**
3. **Remove the Bottom Panel.**
4. **Disconnect the connector P22 on the Mech I/F P.C.Board as shown as Figure 6-3-1.**
5. **Remove the Pinch Solenoid Unit and Loading Motor Neutral Unit (Refer to item 6-9).**
6. **Remove the screw (D) and remove the Mode Select Switch Unit from Loading Motor Neutral Unit as shown in Figure 6-10-1.**

(Installation)

1. **Install the New Mode Select Switch Unit follow the removal steps in reverse order (Please refer to item [6-9. Loading Motor Unit Replacement]).**

   Note:

   Be careful the pin of Mode Switch Unit should be matched to groove of Main Cam Gear.

2. **After install the Pinch Solenoid Unit, Pinch Solenoid Position**

adjustment is required (Refer to item 5-2).

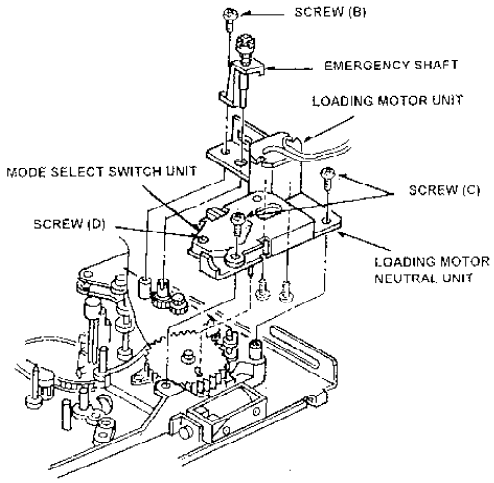

Fig.6-10-1 Removal of mode Select Switch Unit

3.6.11. Main Cam Gear Replacement

(Removal)

1. Remove the Top Panel.
2. Remove the Front Loading Unit.
3. Remove the Pinch Solenoid Unit (Refr to item 6-7) and Loading Motor Neutral Unit (Refer to item 6-9).
4. Remove the Main Cam Gear as shown in Figure 6-11-1.

(Installation)

1. Install the Main Cam Gear, then the pin of Main Cam Arm Unit (*) should be matched with the groove position of Main Cam Gear as shown in Figure 6-11-1.
2. Follow the removal steps in reverse order.
3. After installation, Pinch Solenoid Position Adjustment is required (Refer to item 5-2).

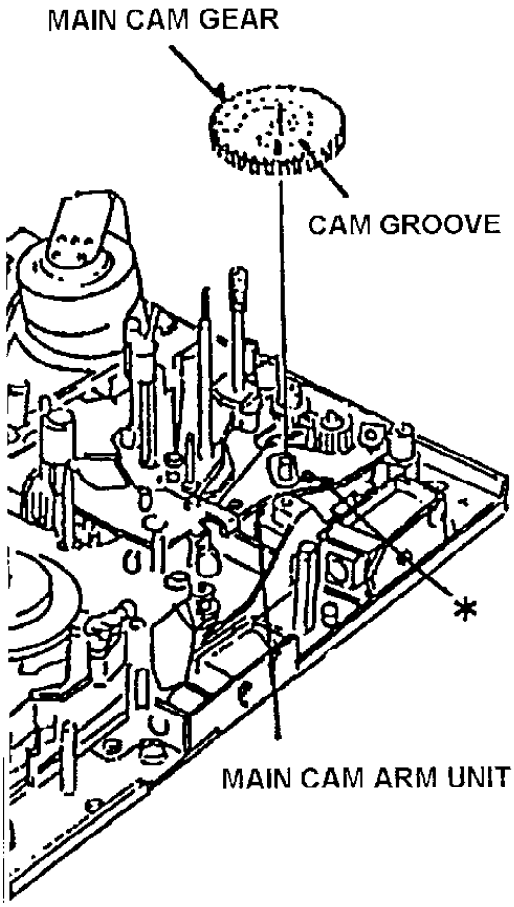

Fig.6-11-1 Removal of Main Cam Gear

3.6.12. S5 Post Base Unit Replacement

(Removal)

1. **Remove the Top Panel.**
2. **Remove the Front Loading Unit.**
3. **Unscrew the screw (A) and remove the S5 Post Base Unit as shown in Figure 6-12-1.**

(Installation)

1. **Install theS5 post Base Unit follow the removal steps in reverse order, then be careful the S5 Post Base Unit is install to mech chassis as shown in Figure 6-12-1.**
2. **After installation, Post Height pre-adjustment (Refer to item 5-4) and Linearity adjustment (Refer to item 5-12 [Tape Pass**

Adjustment Procedure]) should be performed.

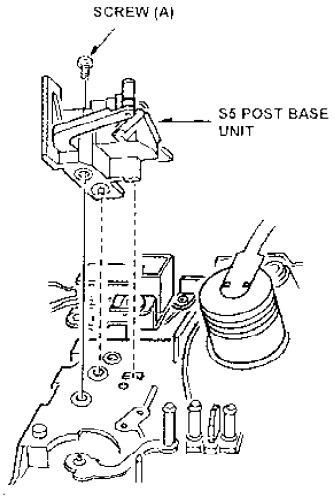

Fig.6-12-1 Removal of S5 Post Base Unit

3.6.13. Tension Arm Unit Replacement

(Removal)

1. **Remove the Top Panel.**
2. **Remove the Front Loading Unit.**
3. **Remove the Cut Washer (A) and hang off the Tension Regi Spring, then remove the Tension Arm Unit as shown in Figure 6-13-1.**

(Installation)

1. **Install the new Tension Arm Unit follow the removal steps in reveres order.**
2. **After installation, Tension Arm Adjustment should be performed the following steps.**

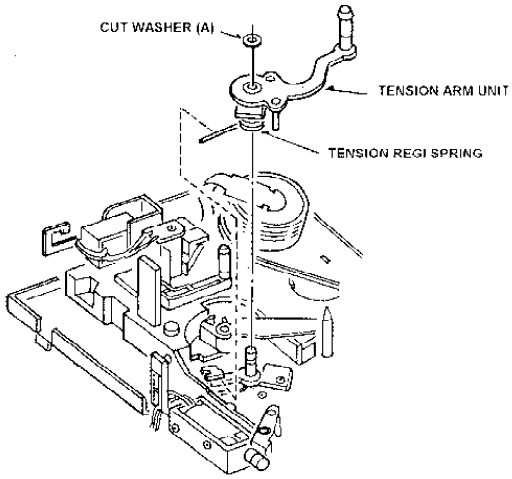

Fig.6-13-1 Removal of Tension Arm Unit

Tension Arm Adjustment Flowchart

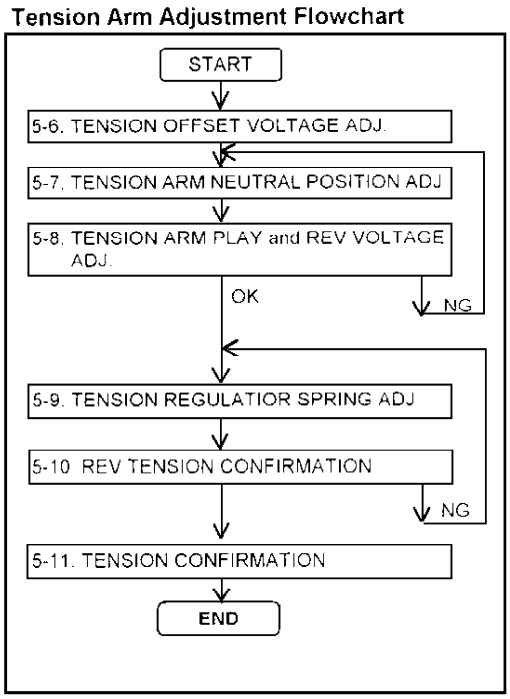

3.6.14. S1 Post Loading Arm Unit Replacement and Adjustment

(Removal)

1. Remove the Top Panel.

2. Remove the Front Loading Unit.

3. Remove the S5 Post Base Unit (Refer to item 6-12).

4. Remove the Tension Arm Unit(Refer to item 6-13).
5. Unscrew the screw (A) and remove the S1 Post from Loading Rail as shown in Figure 6-14-1.
6. Remove the Cut Washer (B) and remove the S1 Loading Arm Unit as shown in Figure 6-14-1.

(Installation)

1. Install the new S1 Loading Arm Unit follow the removal steps in reverse order, then S1 Post Loading Arm Unit Phase Adjustment should be performed as follows.
2. After installation, confirm that the S1 Post moving smoothly on the Loading Rail.
3. Tension Arm (Refer to item 5-5), Post Height Pre-Adjustment (Refer to item 5-4) and Linearity Adjustment. (Refer to item 5-12 [Tape Pass Adjustment Procedure]) should be performed.

(Adjustment)

1. When install the S1 Post Loading Arm Unit, then the hole (A) should be matched hole (B) as shown in Figure 6-14-1.

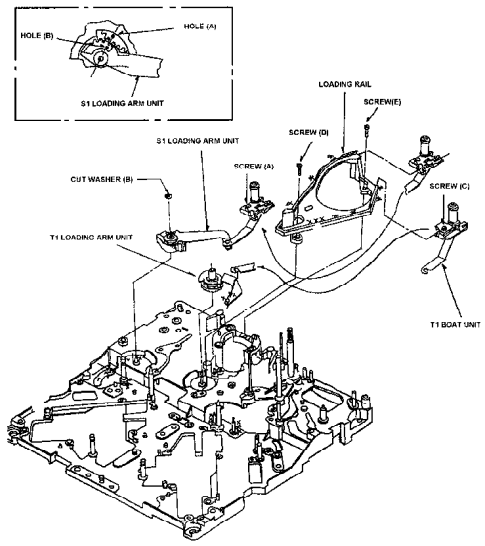

Fig. 6-14-1 Removal of S1 Post Loading Arm Unit

3.6.15. T1 Boat Unit Replacement

(Removal)

1. **Remove the Top Panel.**
2. **Remove the Front Loading Unit.**
3. **Unscrew the screw (C) and remove the T1 Post from Loading Rail as shown in Figure 6-14-1.**
4. **Hang off the T1 Boat Unit from T1 Loading Arm Unit as shown in Figure 6-14-1.**

(Installation)

1. **Install the new T1 Boat Unit follow the removal steps in reverse order.**
2. **After installation confirm that the T1 Post moving smoothly on the Loading Rail.**
   Linearity adjustment (Refer to item 5-12 [Tape Pass Adjustment Procedure]) should be performed.

3.6.16. T1 Loading Arm Unit Replacement and Adjustment

(Removal)

1. **Remove the Top Panel.**
2. **Remove the Front Loading Unit.**
3. **Remove the cylinder Unit (Refer to item 6-1).**
4. **Move the T1 Post to loading direction by manual ejecting method until the screw (D) can be removal position as shown in Figure 6-14-1.**
5. **Unscrew the 2 screws (A) and (C), then remove the S1 and T1 Post from Loading Rail as shown in Figure 6-14-1.**
6. **Unscrew the 2 screws (D) and (E), then remove the Loading Rail as shown in Figure 6-14-1.**
7. **Remove the T1 Loading Arm Unit as shown in Figure 6-14-1.**

(Installation)

1. **Install the T1 Loading Arm Unit follow the removal steps in reverse order, then Phase Adjustment should be performed as follows.**

Note:

This replacement should be performed simultaneously, replacement of Cylinder Unit. It is convenience for Replacement of T1 Loading Arm Unit.

(Adjustment)

1. **When install the T1 Loading Arm Unit, then the hole (A) should be matched hole (B) as shown in Figure 6-16-1.**
2. **After installation confirm that the S1 and T1 Post moving smoothly on the Loading Rail.**
3. **Post Height Pre-adjustment (Refer to item 5-3) and Linearity adjustment (Refer to item 5-12 [Tape Pass Adjustment Procedure]) should be performed.**

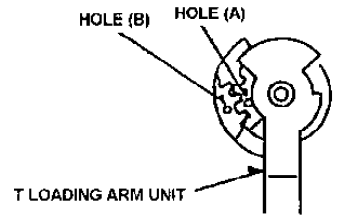

Fig.6-16-1 Phase Adjustment of T1 Lording Arm Unit

3.6.17. Cleaner Solenoid Replacement and Adjustment

(Removal)

1. **Remove the Top Panel.**
2. **Remove the Front Loading Unit.**
3. **Disconnect the connector P11 on the Mech I/F P.C.Board.**
4. **Unscrew the 2 screws (A) and remove the Cleaner Solenoid Unit as shown in Figure 6-17-1.**
5. **Unscrew the 2 screws (B) and remove the Cleaner Solenoid as shown in Figure 6-17-1.**

(Installation)

1. **Install the new Cleaner Solenoid follow the removal steps in reverse order.**
2. **After installation, Cleaner Solenoid Position adjustment should be performed as follows.**

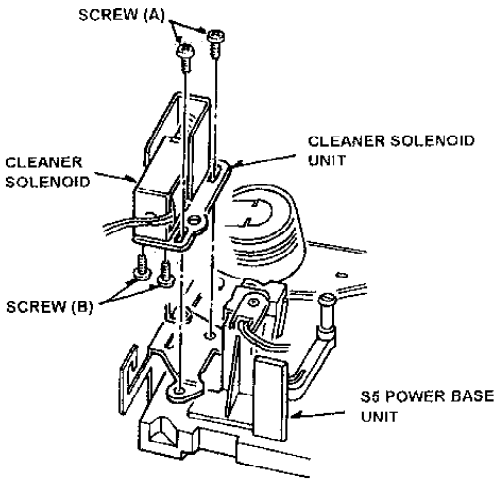

Fig.6-17-1 Removal of Cleaner Solenoid

3.6.17.1. Cleaner Solenoid Position Adjustment

*** Tools Required: Eccentric Driver (VFK0357)**

1. **Press the iron core of Cleaner Solenoid.**
2. **Observe the clearance (D) between Cleaning Arm Unit and Cleaner Base Plate as shown in Figure 6-17-2. And make sure that it is within 0.5 to 0.7mm.**
3. **If not, loosen the 2 screws (A) and adjust the position of Cleaner Solenoid Unit by moving arrow direction (C□C) using the Eccentric drive so that the clearance (D) is within specification. And tighten the 2 screws.**
4. **After adjustment, confirm that as follow.**
5. **Press the iron core of Cleaner Solenoid and released it, then the Cleaning Roller is return to original position.**
6. **Press the iron core of the Cleaner Solenoid and confirm that the Cleaner Roller is rotated, when the Cylinder is rotated by hand.**

Note:

If remove the cleaner Base Plate, Cleaner roller Position adjustment should be performed.

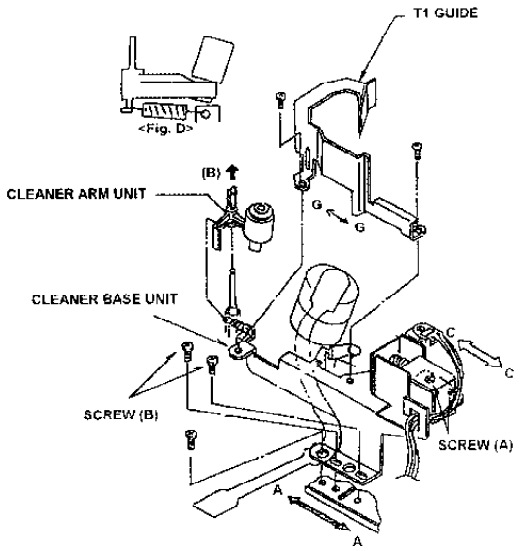

Fig.6-17-2 Cleaner Solenoid Position Adjustment (1)

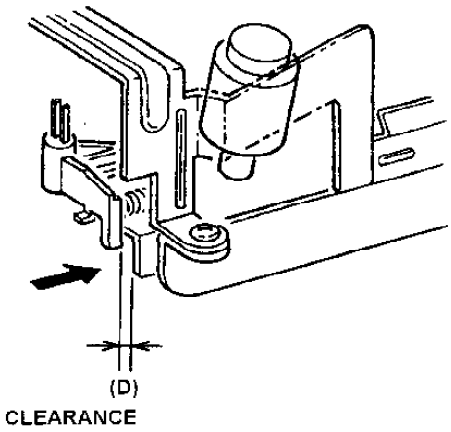

Fig.6-17-3 Cleaner Solenoid Position Adjustment (2)

3.6.17.2. Cleaner Roller Position Adjustment

*** Tools Required: Eccentric Driver (VFK0357)**

1. **Observe the clearance (A) between Cleaner Roller and cylinder Unit as shown in Figure 6-17-3. And make sure that it is within 1.0 to 1.2mm.**
2. **If not, loosen the 2 screws (B) and adjust the position of Cleaner Base Plate by moving arrow direction (A□A) using the Eccentric driver so that the clearance (A) is within specification. And tighten the 2 screws (B).**

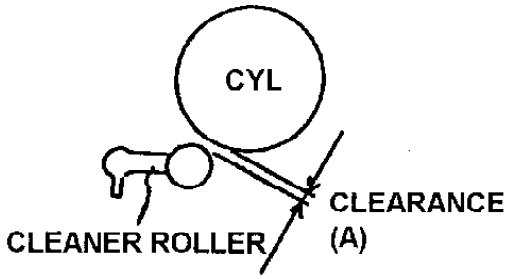

Fig.6-17-4 Cleaner Roller Position Adjustment

3.6.18. M-Stopper Solenoid Replacement and Adjustment

(Removal)

1. **Remove the Top Cover.**
2. **Remove the Front Loading Unit.**
3. **Remove the connector P24 on the Mech I/F P.C.Board as shown in Figure 6-3-1..**
4. **Unscrew the 4 screws (A) and (B) and remove the M-Stopper Solenoid as shown in Figure 6-18-1.**

(Installation)

1. **Install the new M-Stopper Solenoid follow the removal steps in reverse order.**
2. **After installation, position adjustment should be performed as follows.**

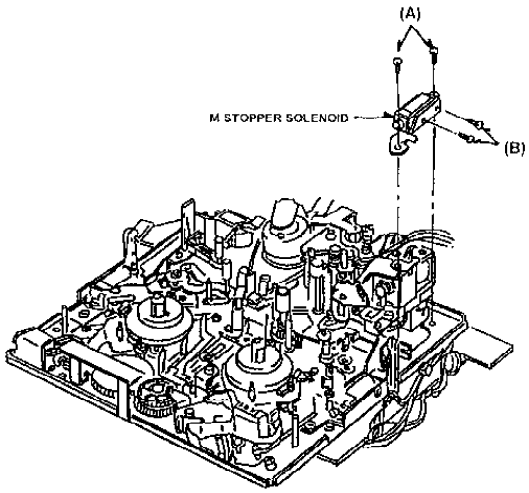

Fig.6-18-1 Removal of M-Stopper Solenoid

(Adjustment)

1. **Place the reels in the L size position.**
2. **Push the iron core of M-Stopper Solenoid by hand.**
3. **Observe the clearance (A) between Mech Chassis and M-Stopper as shown in Figure 6-18-2. And make sure that it is within 1.1 to 1.3mm.**
4. **If not, loosen the 2 screws (A), which fixed M-Stopper Solenoid. And adjust the position of M-Stopper Solenoid so that the clearance (A) is within specification. And tighten the 2 screws (A).**

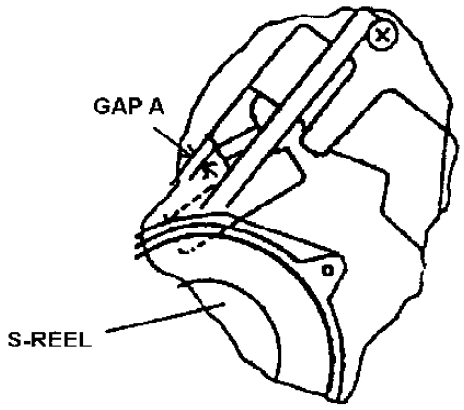

Fig.6-18-2 M-Stopper Solenoid Position Adjustment

3.6.19. Distinction SW Unit Replacement

(Removal)

1. **Remove the Top Case Unit.**
2. **Remove the Front Loading Unit.**
3. **Remove the Bottom Case Unit.**
4. **Open the P.C.Board Unit and remove the Shield Plate.**
5. **Disconnect the connector P17 on Servo P.C.Board.**
6. **Unscrew the 3 screws (A) and remove the Distinction SW Unit as shown in Figure 6-19-1.**

(Installation)

1. **Install the new Distinction Switch Unit follow the removal steps in reverse order.**
2. **Confirm that the M and L cassettes touch to Distinction Switch Unit correctly.**

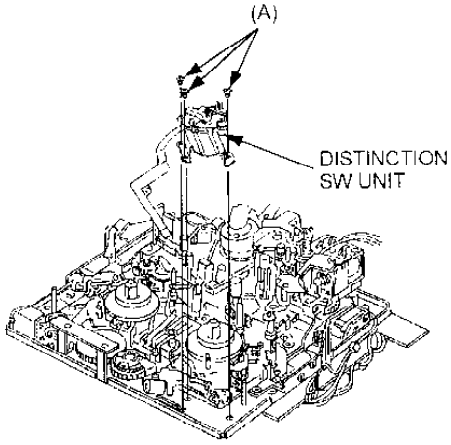

Fig. 6-19-1 Removal of Distinction Switch Uni

3.6.20. Reel Drive Motor Unit Replacement

(Removal)

1. **Remove the Top Cover.**
2. **Remove the Front Loading Unit.**
3. **Disconnect the connector P16 on the Mech I/F P.C.Board. as shown in Figure 6-3-1.**
4. **Unscrew the 2 screws (A) and remove the Reel Drive Sensor P.C.Board as shown in Figure 6-19-1.**
5. **Unscrew the 2 screws (B) and remove the Reel Drive Motor Unit as shown in Figure 6-20-1.**

(Installation)

Install the new Reel Drive Motor Unit follow the removal step in reverse order.

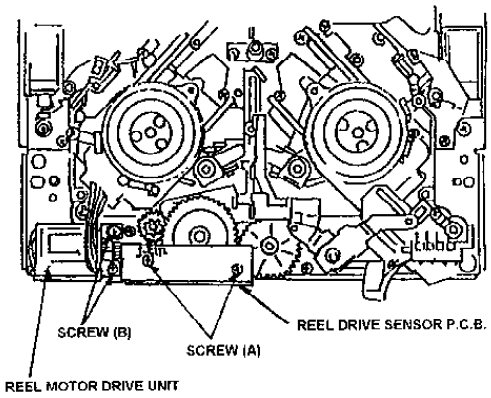

Fig.6-20-1 Removal of Reel Drive Motor Unit

3.6.21. L-M Release Angle Unit Replacement

(Removal)

1. **Remove the Top Panel.**
2. **Remove the Front Loading Unit.**
3. **Unscrew the 2 screws (A) and remove the L-M Release Angle Unit as shown in Figure 6-21-1.**

(Installation)

1. **Install the new L-M Release Angle Unit follow the removal steps reverse order.**

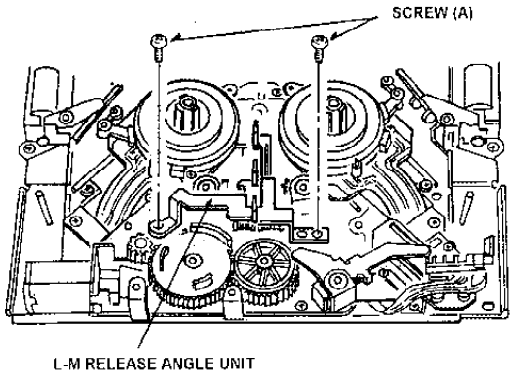

Fig.6-21-1 Removal of L-M Release Angle Unit

3.6.22. Slide Rod Unit Replacement and Adjustment

(Removal)

1. **Remove the Top Panel.**

2. Remove the Front Loading Unit.
3. Remove the L-M Release Angle Unit. (Refer to item 6-21).
4. Remove the Reel Drive Sensor P.C.Board (Refer to item 6-20).
5. Remove the Cut Washer (A) and remove the Reel Drive Cam Gear.
6. Remove the Cut Washer (B) and remove the MIC Drive Arm Unit.
7. Remove the Cut Washer (C) and remove the MIC Geneva Gear.
8. Remove the Cut Washer (D) and remove the Reel Drive Arm Unit as shown in Figure 6-22-2.
9. Remove the Supply and Take Up Reel Rotor Unit (Refer to item 6-3).
10. Remove the 2 Cut Washers (E) and remove the Supply and Take Up Base Drive Arm Unit.
11. Remove the 2 Cut Washers (F) and remove the Slide Rod Unit.

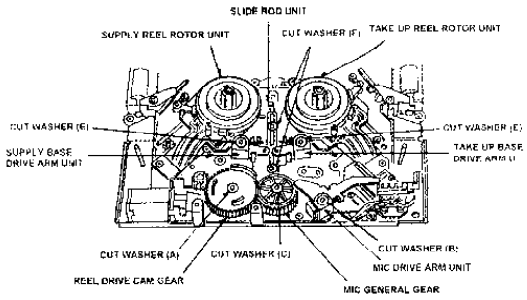

Fig.6-22-1 Removal of Slide Rod Unit

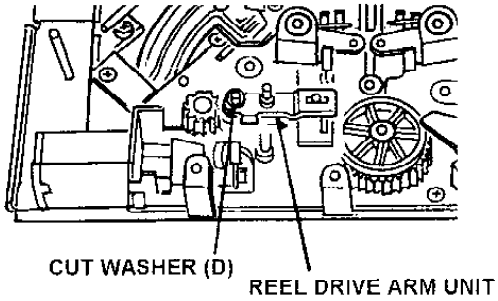

Fig.6-22-2 Removal of Reel Drive Arm Unit

(Installation)

1. Install the new Slide Rod Unit follow the removal steps in reverse order.

2. When install the Reel Drive Cam Gear and MIC Geneva Gear, then phase adjustment should be performed as follows.

(Adjustment)

1. Install the MIC Geneva Gear to the Chassis.
2. Place the Reels in the M-Size position by hand.
3. Install the MIC Drive Arm Unit.
4. Place the REC Inhibit SW in front position on Distinction SW Unit by rotation of MIC Geneva Gear, and then MIC Geneva Gear should be positioned as shown in Figure 6-22-2.

   Note:

   Protrusion of MIC DRIVE Arm Unit is positioned as shown in Figure 6-22-2.

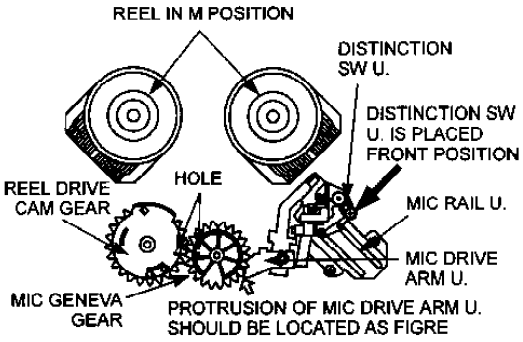

Fig.6-22-3 Gear Phase Adjustment

5. Install the Reel Drive Cam Gear and hole of Reel Drive Cam Gear should be matched with the hole of MIC Geneva Gear as shown in Figure 6-22-3.
6. Install the Cut Washer (A), (B) and (C) as shown in Figure 6-22-1.

***Point of Adjustment**

1. Reel in M-Seze position.
2. Set the REC Inhibit SW in front position of Distinction SW Unit..
3. Portrusion of MIC Drive Arm Unit is positioned as shown in Figure 6-22-3.

4. Holes between Reel Drive Cam Gear and MIC Geneva Gear are matched.

3.6.23. T4 Post Phase Adjustment

1. Place unit into unloading condition.
2. Confirm that the hole (B) of T4 connection Gear was matched to hole of T4 post as shown in figure 6-23-1.
3. Confirm that the portion (C) of T4 connection Gear and hole (A) , which are located as shown in figure 6-23-1.
4. If not, adjust the phase of T4 post follow the above procedure.

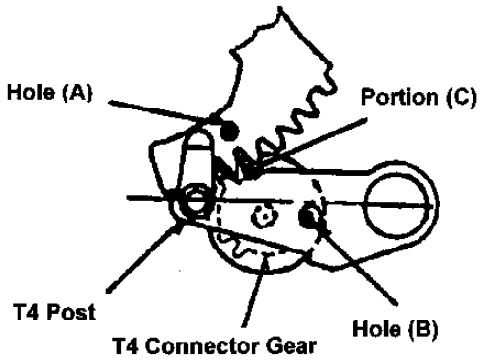

Fig.6-23-1 Phase of T4 Post

3.6.24. Thrust Adjustment Screw Replacement and Adjustment

1. Remove the Thrust Adjustment Screw.
2. Enforce cleaning of point department of capstan shaft with an applicator.
3. Put the oil(VFK0906) on a new Thrust Adjustment Screw and install the upper end of the Capstan Housing.
4. Turn the Thrust Adjustment Screw slowly to counter-clockwise until the Capstan Rotor just starts turning (separate from the Capstan Rotor).
5. Turn the Trust Adjustment Screw an another angle of 270° from 180°(about 225°) clockwise as shown in Fig. 6-24-2.
6. Put the glue (Ex:: Three Bond 1401B) on the Thrust Adjust Screw.
7. Confirm whether the Oil Seal does not come in contact with the Capstan Housing.

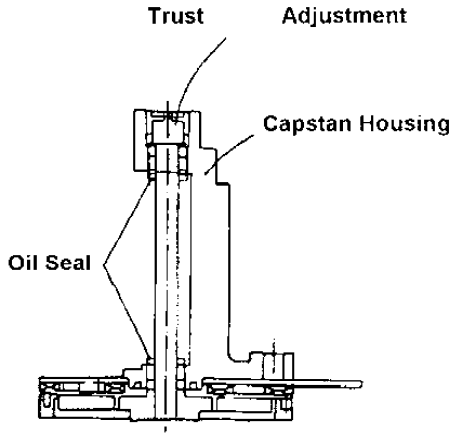

Fig.6-24-1 Removal of Trust Adjustment Screw

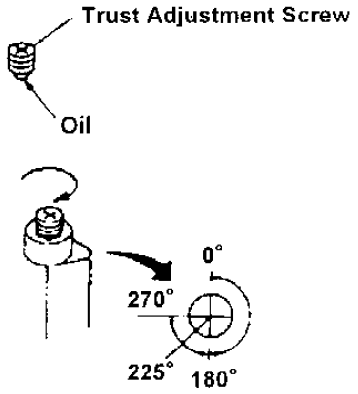

Fig.6-24-2 Adjustment of Thrust Adjustment Screw

4. Electrical Adjustment

4.1. POWER

4.1.1. +5V and +12V Confirmation & Adjustment

BOARD	**POWER 2**
SPEC.	**5V: 5.1V±0.1V** **12V: 11.8V±0.6V**
TEST	**TP6 (+5V), TP12 (+12V)** **(SYSCON BOARD: F2)**
ADJUST	**VR1 (+5V), VR2 (+12V)**
INPUT	**———**
MODE	**EJECT**
M.EQ	**Digital Volt Meter**

1. After connect the test point on SYSCON Board, turn the power ON.

2. Confirm that the voltage at TP6 and 12 in the specification.
3. If it is not, adjust VR1 and VR2 so that the voltage in the specification.

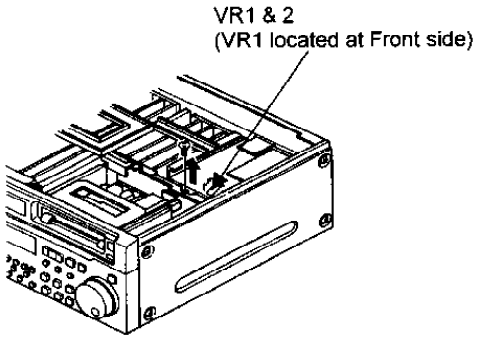

4.2. SYSTEM CONTROL

4.2.1. Super Impose Position Adjustment

BOARD	SYSCON (F2)
SPEC.	A = B
TEST	MONITOR
ADJUST	VC1
INPUT	———
MODE	EJECT
M.EQ	Monitor TV

1. Press the MENU, and displayed the SETUP-MENU.
2. Adjust VC1 so that the width A and B are equal.
3. Press the MENU button, and finished the SETUP-MENU.
4.

NOTE:

The display of menu may be different the above figure.

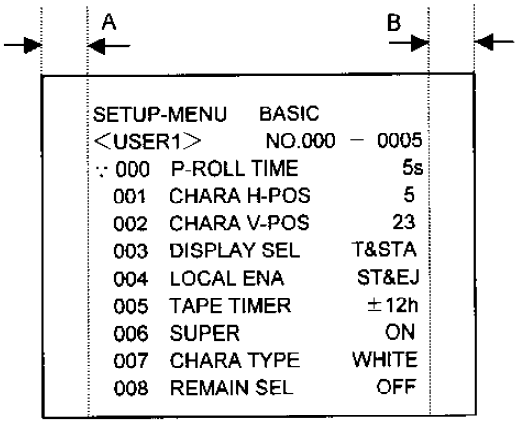

4.3. MECH INTERFACE

4.3.1. Photo Sensor Voltage Adjustment

BOARD	**MECH INTERFACE**
SPEC.	**A = 3.0~4.3VDC**
TEST	**Foil Pattern of TP13 (Supply)** **Foil Pattern of TP14 (Take Up)** **(SYSCON BOARD)**
ADJUST	**DIP SW200 (MECH I/F BOARD)**
INPUT	**———**
MODE	**EJECT**
M.EQ	**Oscilloscope** **VFK1423 (Tape Big./End Det. Cassette)**

1. Remove the Bottom Panel.

2. Insert the VFK1423 and measure the voltage at TP13 and TP14.

3. Set the Dip SW200 so that the DV voltage “A” in the specification.

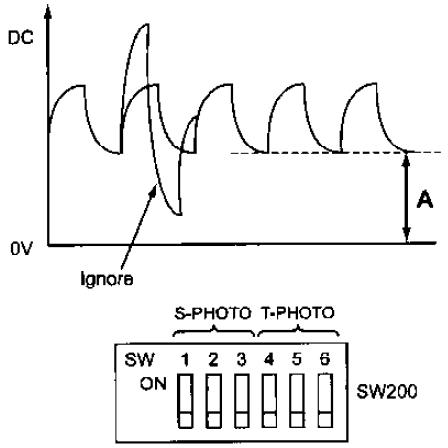

SW1 SW4	SW2 SW4	SW3 SW5	S-PHOTO T-PHOTO	Synthetic Resistance
1	1	1	A Voltage	420Ω
0	1	1	UP	460Ω
1	0	1	↑	660Ω
0	0	1		750Ω
1	1	0		880Ω
0	1	0	↓	1050Ω
1	0	0	A Voltage	3300Ω
0	0	0	DOWN	8200Ω

✱: 1=ON, 0=OFF

4.4. SERVO

4.4.1. Motor Torque Offset Adjustment

BOARD	**SERVIO (F1)**
SPEC.	**15±2grcm (5 times average)**
TEST	**Connect Monitor TV to VIDEO OUT3**
ADJUST	**A03: T-REEL TRQ** **A04: S-REEL TEQ** **(EVR on Service Menu)**
INPUT	**———**
MODE	**EJECT**
TAPE	**No Tape**
M.EQ	**VFK1191 (Dial Torque Gauge)** **VFK1152 (Dial Torque Gauge Adapter)**

1. **Set the REEL TABLE to M-cassette position.**
2. **Remove the Front Loading Unit with the connection cable or remove the Top Plate of Front Loading Unit, which is fixed by 6 screws.**
3. **Open the SERVO ADJUST menu on the Service menu and select the item “A03: T REEL TRQ”.**
4. **Set a Dial Torque Gauge to top of Take-up Reel Table.**
5. **Press the SEARCH button at 5 times and measure the value of Dial Torque Gauge at 5 times, then calculate the average and adjust EVR “T REEL TRQ” so that the average is in the specification.**

   Note:

   While press the SEARCH button, the REEL Table is rotated
6. **Select the item “A04: S REEL TRQ”.**

7. Set a Dial Torque Gauge to top of Take-up Reel Table.
8. Press the SEARCH button at 5 times and measure the value of Dial Torque Gauge at 5 times, then calculate the average and adjust EVR “S REEL TRQ” so that the average is in the specification.

4.5. EQ and RF Adjustment

EQ and RF adjustment can be executed by RF AUTO EQ software and RF AUTO ADJUSTMENT TOOL.
This Service Manual mention of auto adjust procedure and manual adjustment procedure.

4.5.1. AUTO ADJUSTMENT PROCEDURE

4.5.1.1. Preparation and Connection of Auto EQ Adjustment Tool

Test Point	TP2: PB HSW, TG1: GND (RF AMP Board: H4) TP17: PB ENV, TG7: GND (RF AMP Board: H4)
Equipment	● RF Auto Adjustment Tool (VFK1163) * This Tool attached 2 kinds of cable ● RF Adjustment Software (VFK1160C) ● IBM PC Compatible (486/66MHz or greater) ● DAQ-12 A/D Card (Quatech): * This Board is install to PC as same as LISTA ADJ. ● DC Power Supply (+8.5V to +12V) ● RS-232C Cable (type of Cross cable)
Tape	NTSC: VFM3580KM (DVCPRO), VFM3010EDS (DV) PAL: VFM3680KM (DVCPRO), VFM3110EDS (DV) Self-recording and Playback Tape

1. Supply DC Voltage (+8.5 to +12V) to EQ Tool. RF Adjustment Tool requires DC power supply (+8.5V to +12V). Use DC power supply or AC Adaptor movie like “VW-AMC1”.
2. Connect the extension board with RF AMP (H4) board and connect the clip of cable from EQ tool to Test Point follow as below table on the RF AMP P.C.Board.

WHITE CLIP	TP2	RED CLIP	TP17
BLACK CLIP	TG1	BLACK CLIP	TG7

3. Connect the 62 pin D-Sub connector of cable from EQ tool to A/D Board of PC.
4. Connect the RS232C cable to between VTR and PC.

Connection

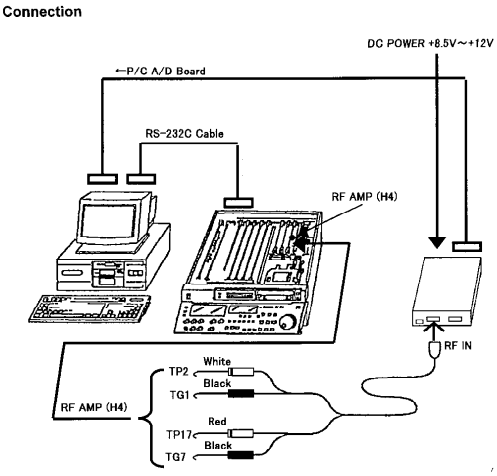

Initial Setting
< Setting of VTR >

1. Open the Set Up Menu in User mode (do not use Service Mode) and confirm the menu is in <USER1> and set the RS-232C mode as shown below.

204	RS232C SEL	ON
205	BAUD RATE	9600
206	DATA LENGTH	8
207	STOP BIT	1
208	PARITY	NON
209	RETURN ACK	ON

2. Press SET button after setting the above items.

3. Set the LOCAL/REMOTE SW to REMOTE side.

4. Set the service switch (DIP SW 1-1: located at bottom side of front panel) to on position.

During Automatic EQ adjustment, adjustment is done with ALIGNMENT tape, so rewind the necessary amount of adjustment tape (DVCPRO MASTER and DV MASTER tape) before boot up the EQ automatic adjustment software.

NOTE:

When the VTR detected tape end position during adjustment, rewind the tape automatically to tape beginning position and continuation of adjustment.

Boot Up the RF Automatic Adjustment Software.

1. Boot Up the EQ Adjustment software after setting and connection.

*** Install and boot up**

Copy the all files in the floppy disk of EQ adjustment software to hard disk (for example as directly "RF ADJ" : C:\RFADJ).

Executive file is DVCRF, so type "DVCRF" and press Enter, then boot up Auto EQ software.

2. **Before boot up software, please confirm the tape does not into VTR and LOCAL/REMOTE switch on the front panel set to REMOTE side.**
3. **After boot up software, appear the message "DVCPRO MODEL SELECT" on the screen, then select the model. In case of the AJ-D850, select the item [(1) AJ-D850].**
4. **Next select item [(1) Adjusting Program] on the "PROGRAM SELECT" menu.**
5. **After item 4 the parameter loading menu is appeared and wait about 20 second. This waiting time can be skipped by pressing ENTER key. Then "RS-232C CONNECTION COMPLETE", "AD BOARD CONNECTION COMPLETE" messages and Main Menu are appeared.**

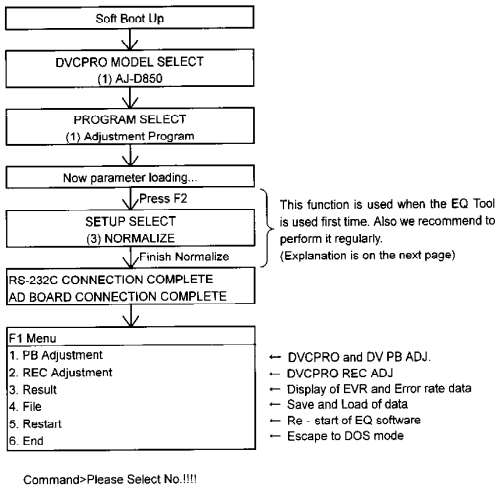

*** Normalize of RF AUTO ADJUSTMENT TOOL**

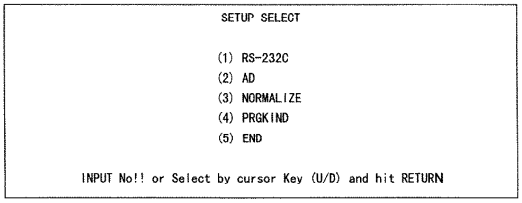

Please select the "(3) NORMALIZE", and press Enter key, then appeared message "Play back the DVCPRO MASTER TAPE, Then PRESS ENTER Key".

Insert DVCPRO color bar alignment tape and press Enter key, then measurement value

appeared as indicated as below.

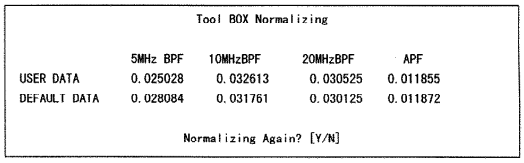

When you use RF Adjustment Tool first time, please confirm that the value of USER DATA and DEFAULT DATA, which should be difference within ±0.01.
When performing this normalization regularly under condition of the same combination of the PC, A/D Board and EQ Tool, the difference of USER DATA and DEFAULT DATA should be with in ±0.005.
If USER DATA value is became out of spec, RF Adjustment Tool (VFK1163) have a problem.
In case of the data within spec, please select the "N", the appear the massage below.
Please Select (U)ser/(D)efault!
Please select "U", then appeared SETUP SELECT Menu.
Eject the tape and select "(5) END", then the screen return to parameter loading.

4.5.1.2. DVCPRO Playback Adjustment

1. **Select "1. PB Adjustment" in the Main Menu.**
2. **Adjustment menu is appeared. "Tape not loading!!" message is appeared, press F8 key (AUTO) for automatic adjustment. The bottom numbers show the Function keys.**

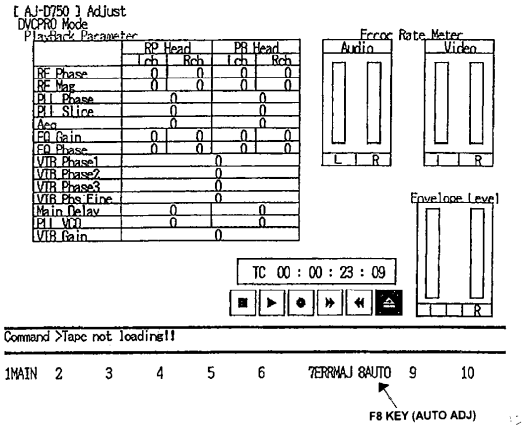

3. **In the SELECT MENU, select "1. ALL Adjustment".**
4. **Then the message of "PLEASE INSERT DVCPRO MASTER TAPE" is appeared in the former adjustment menu, insert DVCPRO MASTER (VFM3580KM : NTSC) or (VFM3680KM : PAL).**
5. **The following picture is appeared and automatic adjustment is started. During automatic adjustment, do not touch VTR and PC.**
6. **Adjustment is completed in 7 or 8 minutes. Then DV Playback adjustment is started. At bottom of the screen, "Please insert DV master Tape" is displayed.**

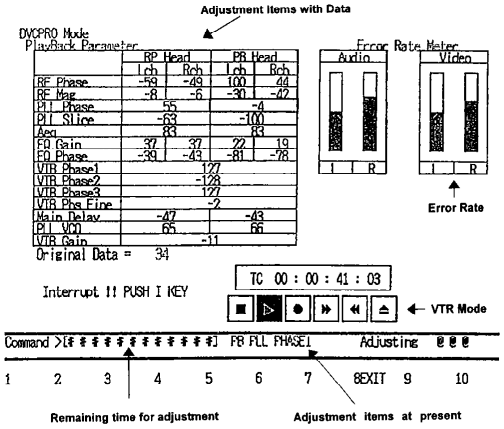

4.5.1.3. DV (Consumer) Playback Adjustment

This adjustment is done following DVCPRO Playback adjustment.

1. **Tape is automatically ejected after DVCPRO Playback Adjustment. Insert DV MASTER Tape when “Please Insert DV MASTER” message is appeared.**
2. **When “DV Data Initialize?” [(Y)es or (N)o]" message is appeared, select N.**
3. **DV Playback automatic adjustment is started. During automatic adjustment, do not touch VTR and PC.**

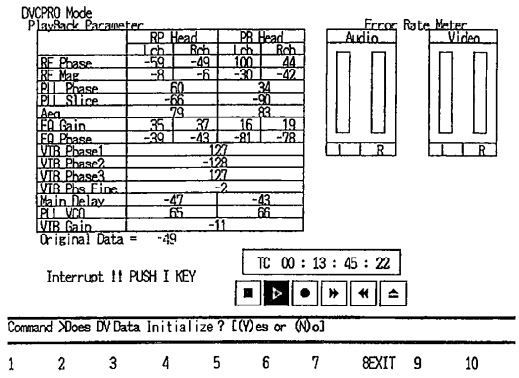

4.5.1.4. Confirmation of Error Rate (PLAYBACK)

1. **After DVCPRO and DV Playback adjustment, measured error rate is automatically displayed as shown below.**

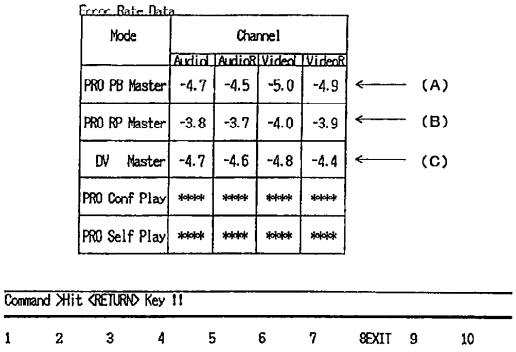

2. Confirm the numbers at (A), (B) and (C) they are displayed in Green.
If the color is red the error rate is too high.
Especially the numbers at (A) and (C) must be Green. If part of row of (B) is red, clean the head and the tape transportation and re-adjust the DVCPRO RP Playback adjustment.

<Procedures>

1. If Return key is pressed, Select Menu is displayed and select “3. DVCPRO RP ONLY Adjustment”. Then follow the message on PC and re-adjust RP mode only.

2. After adjustment error rate is automatically displayed.

Confirm the error rate and if they are correct, do the next adjustment.

4.5.1.5. DVCPRO Recording Adjustment

Start the DVCPRO Recording Adjustment after Playback Adjustment and Error Rate Confirmation.

1. Return to Main Menu. Press Enter key on the Error Rate Display Menu and open the Sub menu.

2. Select “6. Return to manual” and press F1 key (MAIN) and return to Main Menu.

3. Select “2. REC Adjustment” and following “REC Adjustment” menu is appeared.

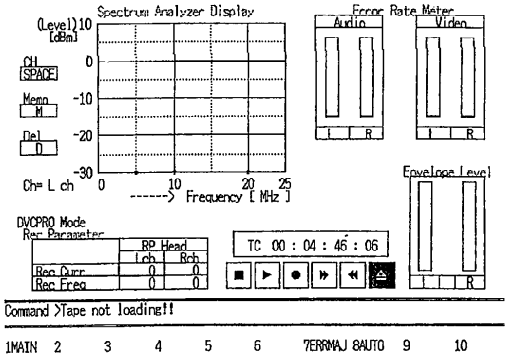

4. **Tape not loading message is appeared. For the automatic adjustment press F8 key (AUTO).**
5. **Select “1. Adjust start” in the Sub Menu.**
6. **The messaged of “Please Insert DVCPRO MASTER TAPE (COLOR BAR)” is appeared, and insert the DVCPRO color bar master tape. After inserting the master tape, Master level and error rate level are automatically memorized.**
7. **During data memorizing, following menu is appeared and waveform is appeared in the Spectrum Analyzer Display part.**

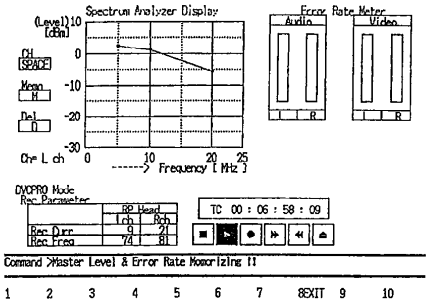

8. **Tape is ejected after completion of Master Tape Data Memorizing, and “Please Insert Blank Tape” message is appeared. Then insert self recording and playback tape.**
9. **Start the Automatic Adjustment.**

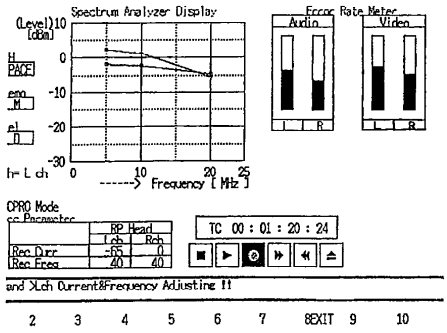

4.5.1.6. Confirmation of Error Rate (REC)

1. **After completion of Automatic Adjustment '<Return> to NEXT STEP" message is appeared, the press Return (ENTER) key.**
2. **“Please Adjust VC600 and VC601 Trimmer Volume and Minimize Error Rate!!” message is appeared. At this menu, observe the error rate at upper right part of the screen and if the error rate is too high (RED color display), adjust manually VC600 and VC601 on the RF AMP (H4) BOARD. If the error rate display changed to green, press Return (ENTER) key.**
3. **Automatically goes to Error Rate measurement mode and “Error Rate Checking!!” message is displayed.**
4. **Error rate is displayed and completion of measurement.**

Error Rate Data

Mode	Channel				
	AudioL	AudioR	VideoL	VideoR	
PRO PB Master	-4.6	-4.3	-5.4	-5.4	
PRO RP Master	-3.5	-3.8	-3.9	-4.1	
DV Master	-4.7	-4.6	-4.7	-4.5	
PRO Conf Play	-5.0	-3.9	-4.5	-3.6	← (A)
PRO Self Play	-5.5	-5.1	-5.3	-5.2	← (B)

Command >Hit <RETURN> Key !!

1 2 3 4 5 6 7 8EXIT 9 10

5. **The row of (A) shows the error rate for confidence playback, the row of (B) shows the error rate for self recording and playback. Confirm the numbers are displayed in Green color.**

Save RF Data and Error Rate Data
RF Adjustment result data and error rate data can be saved.

1. **Return to MAIN Menu from Recording Adjustment menu.**
2. **The procedures are show below.**

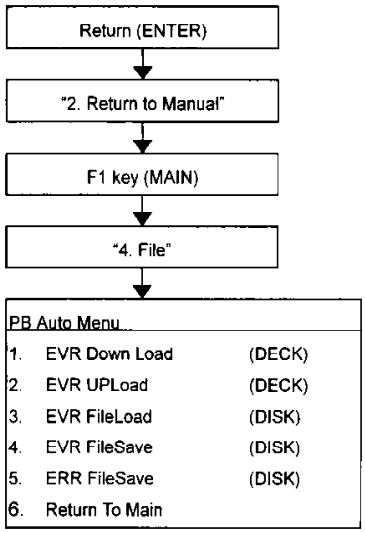

3. item 3 is EVR data loading, item 4 is EVR data saving and item 5 is Error rate data saving.

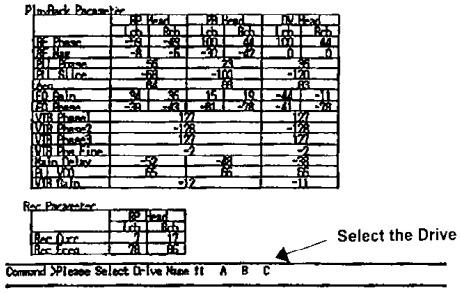

<< EVR File Save >>

1. Select "4. EVR File Save". All parameters are displayed and select the drive for data saving.

2. Enter the file name and comment after selecting the drive. File name must be in 8 characters, and comment is must be in 20 characters. The adjustment data for VTR can be managed same as linearity data. After enter the File name and comment, Sub-menu is automatically displayed. Then save the EVR data.

<< EVR File Load >>

1. Select "3. EVR File Load (DISK)" for reading the EVR data from PC.

2. Select the drive follow the screen message input the saved filename, then EVR data displayed on the screen.

3. When escape from this EVR data display, press "Y" key follow the message "Are You OK", then return to Sub-menu (File selected

menu)

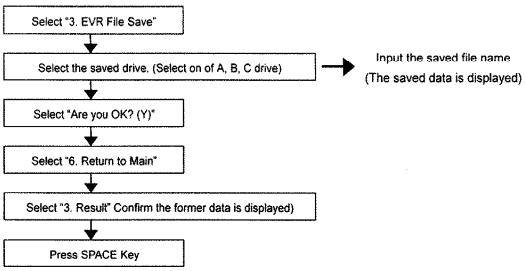

<< Save the Error Data >>

1. **Displayed PB Auto Menu as the same as step of introduction << Save and Reading the EVR Data >>.**
2. **Select “5. ERR File Save” on the PB Auto menu.**
3. **The Error rate data is saved to same directly as AUTO EQ software, which is file “ERRDATA.DAT” Therefore it file can only entry the comment.**
4. **After input comment, Auto EQ software is executed saving operation and return to PB Auto menu.**

<< Load the Error Data >>

1. **The saved Error data file read on the Editor after return to Dos mode.**
2. **The contents of Error data file, which display from left side on the screen “date of saving (month/day/year), comment and error data.”.**
3. **Order to display of Error data from left side, which display as numerical value of upper left (PRO PB MASTER - Audio L) on the error rate table of Auto EQ software display and next to right numerical value displayed. And next row of numerical value (PRO RP MASTER - Audio L) displayed from left to right direction. Therefore most of right side of numerical value on Editor display, which is numerical value of “PRO Self Play - Video R”.**

<< EVR Up Load >>

When EVR file data load to VTR from PC. First EVR file load have to executed follow the procedure on previous page.

1. **Select the item “2 EVR UP Load” and press “U”Key follow the message “ (D)efault or (U)ser Data Up Load”.**
2. **After press “U” button appear the message “Up Load Complete!!**

Are You OK? [(Y)es or (N)o]", then press (Y) button for up load EVR data to VTR.

<< EVR Down Load >>

Note:

The EVR data keep on EQ software until escape DOS mode after Auto EQ adjustment finished. Therefore if you want to save EVR data without execute Auto EQ adjustment, necessary EVR Down Load operation.

1. Select the item "2.EVR Down Load" and press "U" Key follow the message "(D)efault or (U)ser Down Load".
2. After press "U" button appear the message "Down Load Complete!! Are You OK? [(Y)es or (N)o]", then press (Y) button for EVR data down load to PC from VTR.

After finish EVR Down Load, perform "EVR File Save" for file save to disk drive follow the follow the procedure on previous page.

4.5.2. MANUAL ADJUSTMENT PROCEDURE

NOTE: **Setting of Service Menu correspons to setting of Front switches. (Refer to Error Rate Confirmatior Procedure on Section 2.)**

RF ADJUSTMENT

4.5.2.1. Pre EQ Adjustment

BOARD	**RF AMP board (H4)**
SPEC.	**2.5VDC±0.2V (DVCPRO) 2.0+0.5V (DV)**
TEST	**TP20, TP18,TP1 and TP2 (Trigger)**
ADJUST	**C09:RP MAG L, C10:RP MAG R, C13:PB MAG L, C14:PB MAG R (EVR on RF ADJUST menu)**
MODE	**PLAY**
TAPE	**DV Alignment tape (NTSC: VFM3010EDS, PAL: VFM3110EDS) DVCPRO Alignment tape (NTSC: VFM3580KM, PAL: VFM3680KM)**
M.EQ	**Oscilloscope Monitor TV (Connect to VIDEO 3 OUT)**

1. Open the RF ADJUST menu on the Service Menu.
2. Connect the Scope to TP1 for trigger.
3. Connect the Scope to TP20 with 10:1 probe and connect the

ground to TG9.

4. Playback a colour bar portion of the DV Alignment Tape.
5. Adjust EVR “C09:RP MAG L” and “C10:RP MAG R” so that the DC voltage is become 2.0V+0.5V.
6. Playback a colour portion of DVCPRO Alignment Tape.
7. Adjust EVR “C09:RP MAG L” and “C10:RP MAG R” so that the DC voltage is become 2.5V+0.5V.
8. Connect the scope to TP18 with 10:1 probe and connect the ground to TG9.
9. Connect the scope to TP2 for trigger.
10. Adjust EVR “C13:PB MAG L” and EVR “C14:PB MAG R” so that the DC voltage is become 2.0V+0.5V.

Note: How to adjust the EVR.

(1) Press the MENU button on the front bottom panel, then “Service Menu” appeared on the screen.
(2) Select the item “C00: RF ADJUST” by JOG Dial and press the SET button on the front bottom panel then open “RF ADJUST” menu.
(3) Select the adjustment item by JOG Dial, then move The start mark (T) to the adjusting item.
(4) Adjustment became available by pressing JOG/SHTL button, then rotating JOG Dial.

4.5.2.2. RF AMP PB Phase Adjustment

BOARD	RF AMP board (H4)
SPEC.	Minimum of Error Rate
TEST	Front Display
ADJUST	C07:RP PHASE L, C08:RP PHASE R C11:PB PHASE L, C12:PB PHASE R (EVR on RF ADJUST menu)
MODE	PLAY
TAPE	DV Alignment tape (NTSC: VFM3010EDS, PAL: VFM3110EDS) DVCPRO Alignment tape (NTSC: VFM3580KM, PAL: VFM3680KM)
M.EQ	Monitor TV (Connect to VIDEO 3 OUT)

1. Set the switches as shown below
   Front Bottom CF:4F
2. Open the RF Adjust menu on the Service menu and set as follows.

	C20 ERROR MODE	FAST
	C19 PB MODE	RP H
	C18 VITERBI MODE	ON
	C17 CONCEAL MODE	OFF
	C16 ECC MODE	AL OFF

3. Playback the DV colour bar portion of Alignment Tape.
4. Adjust EVR “C07: RP PHASE L” and “C08:RP PHASE R” so that the error rate is minimum.
5. Playback the colour bar portion of DVCPRO Alignment tape.
6. Adjust EVR “C07:RP PHASE L” and “C08:RP PHASE R” so that the error rate is minimum.
7. Set the item “C19:PB MODE” to PB H.
8. Adjust “C11:PB PHASE L” and “C12:PB PHASE R” so that the error rate is minimum.

4.5.3. EQ ADJUSTMENT

4.5.3.1. PLL Lock Adjustment (PB)

BOARD	EQ Board (H3)
SPEC.	———
TEST	TP403, Monitor
ADJUST	VR410, B01:PB PLL PHASE, B02:PB PLL SLICE (EVR on EQ ADJUST menu)
INPUT	———
MODE	PLAY
TAPE	NTSC: VFM3580KM PAL: VFM3680KM
M.EQ	Monitor TV Oscilloscope

1. Set the Error Rate display mode.
2. Open the EQ ADJUST menu on Service Menu and set as follows.

	B28 ERROR MODE	FAST
	B27 PB MODE	RP H
	B26 VITERBI MODE	OFF
	B25 CONCEAL MODE	OFF
	B24 ECC MODE	AL OFF

3. Playback the Alignment tape and confirm the picture is appeared on the monitor.
4. If picture is not appeared, adjust following items
   (1) Connect the scope to TP403 and adjust VR410 so that the DC voltage is become 2.1VDC.
   (2) Adjust “B01:PB PLL PHASE” and “B02:PB PLL SLICE” so that the picture appears on the monitor.
5. Repeat STOP to PLAY mode, and confirm the Picture is surely appeared every time.

4.5.3.2. PLL Latch Phase Coarse Adjustment (PB)

BOARD	EQ Board (H3)
SPEC.	Error Rate Minimum
TEST	Error Rate Level Meter (Front display)
ADJUST	B01:PB PLL PHASE (EVR on EQ ADJUST menu)
INPUT	———
MODE	PLAY
TAPE	NTSC: VFM3580KM PAL: VFM3680KM
M.EQ	Monitor TV

1. Set the Error Rate display mode.
2. Open the EQ ADJUST menu on Service menu and set as follows.

	B28 ERROR MODE	FAST
	B27 PB MODE	RP H
	B26 VITERBI MODE	OFF
	B25 CONCEAL MODE	OFF
	B24 ECC MODE	AL OFF

3. Playback the Alignment tape.
4. Adjust “B01:PB PLL PHASE” so that the video error rate becomes

minimum.

4.5.3.3. PLL Slice Level Coarse Adjustment (PB)

BOARD	**EQ Board (H3)**
SPEC.	**Error Rate Minimum**
TEST	**Error Rate Level Meter (Front display)**
ADJUST	**B02:PB PLL SLICE** **(EVR on EQ ADJUST menu)**
INPUT	**———**
MODE	**PLAY**
TAPE	**NTSC: VFM3580KM** **PAL: VFM3680KM**
M.EQ	**Monitor TV**

1. Set the Error Rate display mode.

2. Open the EQ ADJUST menu on Service menu and set as follows.

	B28 ERROR MODE	**FAST**
	B27 PB MODE	**RP H**
	B26 VITERBI MODE	**OFF**
	B25 CONCEAL MODE	**OFF**
	B24 ECC MODE	**AL OFF**

3. Playback the Alignment tape.

4. Adjust “B02:PB PLL SLICE” so that the video error rate becomes minimum.

4.5.3.4. EQ Adjustment (1) (PB)

BOARD	**EQ Board (H3)**
SPEC.	**Error Rate Minimum**
TEST	**Error Rate Level Meter (Front display)**
ADJUST	**B19:PB MAIN DL** **(EVR on EQ ADJUST menu)**
INPUT	**———**
MODE	**PLAY**
TAPE	**NTSC: VFM3580KM** **PAL: VFM3680KM**
M.EQ	**Monitor TV**

1. Set the Error Rate display mode.

2. Open the EQ ADJUST menu on Service menu and set as follows.

	B28 ERROR MODE	FAST
	B27 PB MODE	RP H
	B26 VITERBI MODE	OFF
	B25 CONCEAL MODE	OFF
	B24 ECC MODE	AL OFF

3. Playback the Alignment tape.
4. Adjust “B19:PB MAIN DL” so that the video error rate is minimum.

4.5.3.5. EQ Adjustment (2) (PB)

BOARD	EQ Board (H3)
SPEC.	Error Rate Minimum
TEST	Error Rate Level Meter (Front display)
ADJUST	B03:PB AEQ, B04:PB GAIN L, B05:PB PHASE L, B06:PB GAIN R, B07:PB PHASE R (EVR on EQ ADJUST menu)
INPUT	———
MODE	PLAY
TAPE	NTSC: VFM3580KM PAL: VFM3680KM
M.EQ	Monitor TV

1. Set the Error Rate display mode.
2. Open the EQ ADJUST menu on Service menu and set as follows.

	B28 ERROR MODE	FAST
	B27 PB MODE	RP H
	B26 VITERBI MODE	OFF
	B25 CONCEAL MODE	OFF
	B24 ECC MODE	AL OFF

3. Playback the Alignment tape.
4. Adjust each adjustment item so that the each portions error rate becomes minimum as shown in the table.

Procedures	Adjust VR	Error Rate Portion
1	PB AEQ	VIDEO R & L CH
2	PB GAIN L	VIDEO L CH
3	PB PHASE L	VIDEO L CH
4	PB GAIN R	VIDEO R CH
5	PB PHASE R	VIDEO R CH

4.5.3.6. PLL Latch Phase Fine Adjustment (PB)

BOARD	EQ Board (H3)
SPEC.	Error Rate Minimum
TEST	Error Rate Level Meter (Front display)
ADJUST	B01:PB PLL PHASE (EVR on EQ ADJUST menu)
INPUT	———
MODE	PLAY
TAPE	NTSC: VFM3580KM PAL: VFM3680KM
M.EQ	Monitor TV

1. Set the Error Rate display mode.
2. Open the EQ ADJUST menu on Service menu and set as follows.

B28 ERROR MODE	FAST
B27 PB MODE	RP H
B26 VITERBI MODE	OFF
B25 CONCEAL MODE	OFF
B24 ECC MODE	AL OFF

3. Playback the Alignment tape.
4. Adjust “B01:PB PLL PHASE” so that the video error rate becomes minimum.

4.5.3.7. PLL Slice Level Fine Adjustment (PB)

BOARD	EQ Board (H3)
SPEC.	Error Rate Minimum
TEST	Error Rate Level Meter (Front display)
ADJUST	B02:PB PLL SLICE (EVR on EQ ADJUST menu)
INPUT	———
MODE	PLAY
TAPE	NTSC: VFM3580KM PAL: VFM3680KM
M.EQ	Monitor TV

1. Set the Error Rate display mode.
2. Open the EQ ADJUST menu on Service menu and set as follows.

B28 ERROR MODE	FAST
B27 PB MODE	RP H
B26 VITERBI MODE	OFF
B25 CONCEAL MODE	OFF
B24 ECC MODE	AL OFF

3. Playback the Alignment tape.
4. Adjust “B02:PB PLL SLICE” so that the video error rate becomes minimum.

4.5.3.8. Viterbi A/D Input Level Adjustment

BOARD	EQ Board (H3)
SPEC.	Error Rate Minimum
TEST	Center of VR409 pattern Error Rate Level Meter (Front display)
ADJUST	B23:VITABI GAIN, VR801, (EVR on EQ ADJUST menu)
INPUT	———
MODE	PLAY
TAPE	NTSC: VFM3580KM PAL: VFM3680KM
M.EQ	Monitor TV

1. Set the Error Rate display mode.
2. Open the EQ ADJUST menu on Service menu and set as follows.

	B28 ERROR MODE	FAST
	B27 PB MODE	RP H
	B26 VITERBI MODE	ON
	B25 CONCEAL MODE	OFF
	B24 ECC MODE	AL OFF

3. **Playback the Alignment tape.**
4. **Adjust “B23:VTB GAIN” so that the video error rate becomes minimum.**
5. **Connect the Electric Volt Meter to “Center of VR409 Pattern” as shown as below figure and confirm the DC voltage is 2.1V DC to 2.4VDC. If it is not, adjust VR801.**

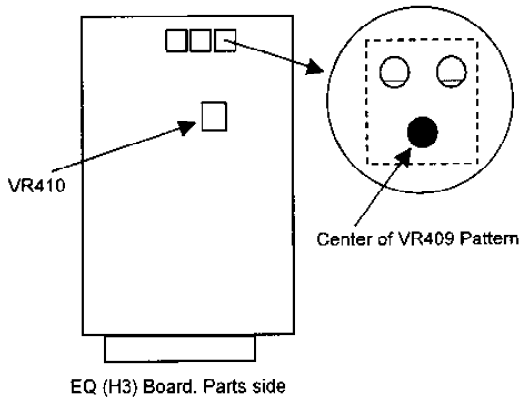

4.5.3.9. PLL Lock Adjustment (R/P)

BOARD	**EQ Board (H3)**
SPEC.	**———**
TEST	**TP203, Monitor TV**
ADJUST	**VR210,** **B08:RP PLL PHASE, B09:RP PLL SLICE** **(EVR on EQ ADJUST menu)**
INPUT	**———**
MODE	**PLAY**
TAPE	**NTSC: VFM3580KM** **PAL: VFM3680KM**
M.EQ	**Monitor TV**

1. Set the Error Rate display mode.
2. Open the EQ ADJUST menu on Service menu and set as follows.

	B28 ERROR MODE	FAST
	B27 PB MODE	RP H
	B26 VITERBI MODE	OFF
	B25 CONCEAL MODE	OFF
	B24 ECC MODE	AL OFF

3. Playback the Alignment tape and confirm the picture appears on the monitor.
4. If the picture is not appeared adjust following items.
   (1) Connect the Electric Volt Meter to TP203 and adjust VR210 so that the DC voltage is 2.1VDC.
   (2) Adjust “B08:RP PLL PHASE” and “B09:RP PLL SLICE so that the picture appears on the monitor.
5. Repeat STOP to PLAY and confirm the picture is surely appeared.

4.5.3.10. PLL Latch Phase Adjustment (R/P)

BOARD	EQ Board (H3)
SPEC.	Error Rate minimum
TEST	Error Rate Level Meter (Front display)
ADJUST	B08:RP PLL PHASE (EVR on EQ ADJUST menu)
INPUT	———
MODE	PLAY
TAPE	NTSC: VFM3580KM PAL: VFM3680KM
M.EQ	Monitor TV

1. Set the Error Rate display mode.
2. Open the EQ ADJUST menu on Service menu and set as follows.

	B28 ERROR MODE	FAST
	B27 PB MODE	RP H
	B26 VITERBI MODE	OFF
	B25 CONCEAL MODE	OFF
	B24 ECC MODE	AL OFF

3. Playback the Alignment tape.

4. Adjust “B08:RP PLL PHASE” so that the video error rare is minimum.

4.5.3.11. PLL Slice Level Adjustment (R/P)

BOARD	EQ Board (H3)
SPEC.	Error Rate minimum
TEST	Error Rate Level Meter (Front display)
ADJUST	B09:RP PLL SLICE (EVR on EQ ADJUST menu)
INPUT	———
MODE	PLAY
TAPE	NTSC: VFM3580KM PAL: VFM3680KM
M.EQ	Monitor TV

1. Set the Error Rate display mode.

2. Open the EQ ADJUST menu on Service menu and set as follows.

	B28 ERROR MODE	FAST
	B27 PB MODE	RP H
	B26 VITERBI MODE	OFF
	B25 CONCEAL MODE	OFF
	B24 ECC MODE	AL OFF

3. Playback the Alignment tape.

4. Adjust “B09:RP PLL SLICE” so that the video error rare is minimum.

4.5.3.12. EQ Adjustment (1) (R/P)

BOARD	EQ Board (H3)
SPEC.	Error Rate minimum
TEST	Error Rate Level Meter (Front display)
ADJUST	B20:RP MAIN DL (EVR on EQ ADJUST menu)
INPUT	———
MODE	PLAY
TAPE	NTSC: VFM3580KM PAL: VFM3680KM
M.EQ	Monitor TV

1. Set the Error Rate display mode.

2. Open the EQ ADJUST menu on Service menu and set as follows.

	B28 ERROR MODE	FAST
	B27 PB MODE	RP H
	B26 VITERBI MODE	OFF
	B25 CONCEAL MODE	OFF
	B24 ECC MODE	AL OFF

3. Playback the Alignment tape.

4. Adjust “B20:RP MAIN DL” so that the video error rare is minimum.

4.5.3.13. EQ Adjustment (2) (R/P)

BOARD	EQ Board (H3)
SPEC.	Error Rate minimum
TEST	Error Rate Level Meter (Front display)
ADJUST	B10:RP AEQ, B11:RP GAIN L, B12:RP PHASE L, B13:RP GAIN R B14:RP PHASE R (EVR on EQ ADJUST menu)
INPUT	———
MODE	PLAY
TAPE	NTSC: VFM3580KM PAL: VFM3680KM
M.EQ	Monitor TV

1. Set the Error Rate display mode on VTR.

2. Open the EQ ADJUST menu on Service menu and set as follows.

	B28 ERROR MODE	FAST
	B27 PB MODE	RP H
	B26 VITERBI MODE	OFF
	B25 CONCEAL MODE	OFF
	B24 ECC MODE	AL OFF

3. Playback the Alignment tape.

4. Adjust the each EVR so that the error rate is minimum.

Procedures	Adjust VR	Correspond of Error Rate Portion
1	RP AEQ	VIDEO R & L CH
2	RP GAIN L	VIDEO L CH
3	RP PHASE L	VIDEO L CH
4	RP GAIN R	VIDEO R CH
5	RP PHASE R	VIDEO R CH

4.5.3.14. PLL Latch Phase Fine Adjustment (R/P)

BOARD	EQ Board (H3)
SPEC.	Error Rate minimum
TEST	Error Rate Level Meter (Front display)
ADJUST	B08:RP PLL PHASE (EVR on EQ ADJUST menu)
INPUT	———
MODE	PLAY
TAPE	NTSC: VFM3580KM PAL: VFM3680KM
M.EQ	Monitor TV

1. Set the Error Rate display mode on VTR.

2. Open the EQ ADJUST menu on Service menu and set as follows.

B28 ERROR MODE	FAST
B27 PB MODE	RP H
B26 VITERBI MODE	OFF
B25 CONCEAL MODE	OFF
B24 ECC MODE	AL OFF

3. Playback the Alignment tape.

4. Adjust RP PLL PHASE so that the error rate is minimum.

4.5.3.15. PLL Slice Level Fine Adjustment (R/P)

BOARD	EQ Board (H3)
SPEC.	Error Rate minimum
TEST	Error Rate Level Meter (Front display)
ADJUST	B09:RP PLL SLICE (EVR on EQ ADJUST menu)
INPUT	———
MODE	PLAY
TAPE	NTSC: VFM3580KM PAL: VFM3680KM
M.EQ	Monitor TV

1. Set the Error Rate display mode on VTR.
2. Open the EQ ADJUST menu on Service menu and set as follows.

	B28 ERROR MODE	FAST
	B27 PB MODE	RP H
	B26 VITERBI MODE	OFF
	B25 CONCEAL MODE	OFF
	B24 ECC MODE	AL OFF

3. Playback the Alignment tape.
4. Adjust “B09:RP PLL SLICE” so that the error rate is minimum.

4.5.3.16. PLL Lock Confirmation (Consumer DV)

BOARD	EQ Board (H3)
SPEC.	———
TEST	Monitor TV
ADJUST	B02:PB PLL SLICE (EVR on EQ ADJUST menu)
INPUT	———
MODE	PLAY
TAPE	(Consumer DV Alignment Tape) NTSC:VFM3010EDS, PAL:VFM3110EDS
M.EQ	Monitor TV

1. Set the Error Rate display mode on VTR.
2. Open the EQ ADJUST menu on Service menu and set as follows.

	B28 ERROR MODE	FAST
	B27 PB MODE	RP H
	B26 VITERBI MODE	OFF
	B25 CONCEAL MODE	OFF
	B24 ECC MODE	AL OFF

3. Playback the Alignment tape and confirm the picture appears on the monitor.
   If picture is not appeared adjust “B02:PB PLL SLICE.” so that the picture appears on the monitor.
4. Repeat STOP to PLAY and confirm the picture is surely appeared.

4.5.3.17. PLL Slice Level Coarse Adjustment (Consumer DV)

BOARD	EQ Board (H3)
SPEC.	Error Rate Minimum
TEST	Error Rate Level Meter (Front display)
ADJUST	B02:PB PLL SLICE (EVR on EQ ADJUST menu)
INPUT	———
MODE	PLAY
TAPE	(Consumer DV Alignment Tape) NTSC:VFM3010EDS, PAL:VFM3110EDS
M.EQ	Monitor TV

1. Set the Error Rate display mode.
2. Open the EQ ADJUST menu on Service menu and set as follows.

	B28 ERROR MODE	FAST
	B27 PB MODE	RP H
	B26 VITERBI MODE	OFF
	B25 CONCEAL MODE	OFF
	B24 ECC MODE	AL OFF

3. Playback the Alignment tape.
4. Adjust “B02:PB PLL SLICE”, so that the video error rate is minimum.

4.5.3.18. EQ Adjustment (1) (Consumer DV)

BOARD	**EQ (H3)**
SPEC.	**Error Rate Minimum**
TEST	**Error Rate Level Meter (Front display)**
ADJUST	**B19:PB MAIN DL** **(EVR on EQ ADJUST menu)**
INPUT	**———**
MODE	**PLAY**
TAPE	**(Consumer DV Alignment Tape)** **NTSC:VFM3010EDS, PAL:VFM3110EDS**
M.EQ	**Monitor TV**

1. Set the Error Rate display mode.

2. Open the EQ ADJUST menu on Service menu and set as follows.

B28 ERROR MODE	**FAST**
B27 PB MODE	**RP H**
B26 VITERBI MODE	**OFF**
B25 CONCEAL MODE	**OFF**
B24 ECC MODE	**AL OFF**

3. Playback the Alignment tape.

4. Adjust “B19:PB MAIN DL” so that the video error rate is minimum.

4.5.3.19. EQ Adjustment (2) (Consumer DV)

BOARD	**EQ Board (H3)**
SPEC.	**Error Rate Minimum**
TEST	**Error Rate Level Meter (Front display)**
ADJUST	**B03:PB AEQ, B04:PB GAIN L,** **B05:PB PHASE L, B06:PB GAIN R,** **B07:PB PHASE R** **(EVR on EQ ADJUST menu)**
INPUT	**———**
MODE	**PLAY**
TAPE	**(Consumer DV Alignment Tape)** **NTSC:VFM3010EDS, PAL:VFM3110EDS**
M.EQ	**Monitor TV**

1. Set the Error Rate display mode.

2. Open the EQ ADJUST menu on Service menu and set as follows.

	B28 ERROR MODE	FAST
	B27 PB MODE	RP H
	B26 VITERBI MODE	OFF
	B25 CONCEAL MODE	OFF
	B24 ECC MODE	AL OFF

3. Playback the Alignment tape.

4. Adjust each EVR so that the error rate is minimum.

Procedures	Adjust VR	Correspond of Error Rate Portion
1	PB AEQ	VIDEO R & L CH
2	PB GAIN L	VIDEO L CH
3	PB PHASE L	VIDEO L CH
4	PB GAIN R	VIDEO R CH
5	PB PHASE R	VIDEO R CH

4.5.3.20. PLL Slice Level Fine Adjustment (Consumer DV)

BOARD	EQ Board (H3)
SPEC.	Error Rate Minimum
TEST	Error Rate Level Meter (Front display)
ADJUST	B08:PB PLL PHASE (EVR on EQ ADJUST menu)
INPUT	———
MODE	PLAY
TAPE	(Consumer DV Alignment Tape) NTSC:VFM3010EDS, PAL:VFM3110EDS
M.EQ	Monitor TV

1. Set the Error Rate display mode.

2. Open the EQ ADJUST menu on Service menu and set as follows.

	B28 ERROR MODE	FAST
	B27 PB MODE	RP H
	B26 VITERBI MODE	OFF
	B25 CONCEAL MODE	OFF
	B24 ECC MODE	AL OFF

3. Playback the Alignment tape.

4. Adjust “B08:PB PLL SLICE” so that the video error rate becomes

minimum.

4.5.3.21. Consumer DV Viterbi Confirmation

BOARD	**EQ Board (H3)**
SPEC.	**Error Rate Minimum**
TEST	**Error Rate Level Meter (Front display)**
ADJUST	**B23:VTB GAIN, B01:PB PLL PHASE (EVR on EQ ADJUST menu)**
INPUT	**———**
MODE	**PLAY**
TAPE	**(Consumer DV Alignment Tape) NTSC:VFM3010EDS, PAL:VFM3110EDS**
M.EQ	**Monitor TV**

1. Set the Error Rate display mode.

2. Open the EQ ADJUST menu on Service menu and set as follows.

B28 ERROR MODE	**FAST**
B27 PB MODE	**RP H**
B26 VITERBI MODE	**OFF**
B25 CONCEAL MODE	**OFF**
B24 ECC MODE	**AL OFF**

3. Playback the Alignment tape.

4. Confirm the error rate is improved by Viterbi on.
The improvement can be confirmed by the error rate meter decrease 5 scale on the front audio meter.

5. If the error rate is not improved so much, adjust “B23:VTB GAIN” and “B01:PB PLL PHASE”.

4.5.3.22. Final confirmation of Error Rate.

BOARD	**EQ Board (H3)**
SPEC.	**DVCPRO (PB mode) : under the A**
	DVCPRO (Confi mode) :under the C
	DV (PB mode) : under the B
TEST	**Error Rate Level Meter (Front display)**
MODE	**PLAY, REC**
TAPE	**(DVCPRO Alignment Tape)** **NTSC: VFM3580KM, PAL: VFM3680KM** **(Consumer DV Alignment Tape)** **NTSC:VFM3110EDS, PAL:VFM3110EDS** **Blank Tape**
M.EQ	**Monitor TV**

1. Set the Error Rate display mode

2. Open the EQ ADJUST menu on Service menu and set as follows.

ITEM of the MENU	DVCPRO	DV
B28: ERROR MODE	FAST	FAST
B27: PB MODE	PB H	RP H
B26: VITERBI MODE	ON	ON
B25: CONCEAL MODE	ON	ON
B24: ECC MODE	AL OFF	AL OFF

Confirm that the Error rate in specification, on DVCPRO playback, REC (confi) and DV playback mode.

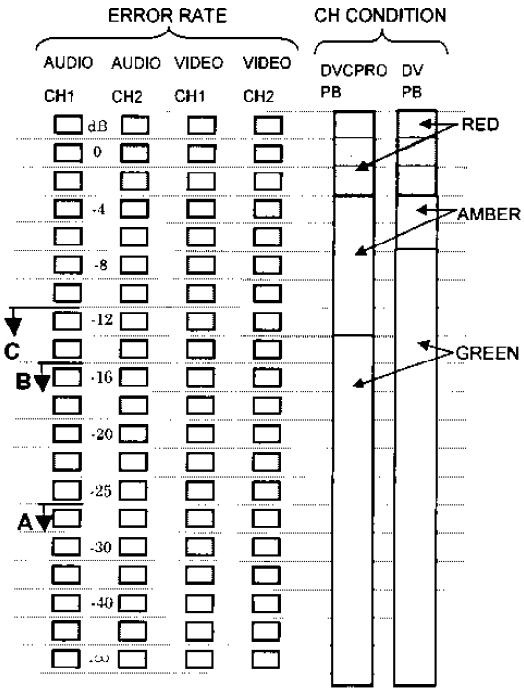

4.5.4. REC AMP Board

4.5.4.1. REC Current, Frequency Characteristic Adjustment

BOARD	**RF AMP (H4)**
SPEC.	**———**
TEST	**TP17,TG7 (GND), TP2 (TRIG)**
ADJUST	**C01:REC CURR L, C03:REC CUR R C02:REC FREQ L, C04:REC FREQ R (EVR on RF ADJUST menu) VC600,VC601**
INPUT	**100% Colour bar**
MODE	**PLAY, REC/PLAY**
TAPE	**NTSC: VFM3580KM, PAL: VFM3680KM Blank Tape**
M.EQ	**Spectrum Analyzer/Monitor TV (Connect to VIDEO 3 OUT)**

1. **Connect the trigger of spectrum Analyzer at TP2 and connect the Spectrum Analyzer in at TP17 with 50ohm coaxial cable (Use GND at TG7).**
2. **Set the Error Rate display mode.**
3. **Open the RF ADJUST menu on Service menu and set as follows.**

C20 ERROR MODE	FAST
C19 PB MODE	RP H
C18 VITERBI MODE	ON
C17 CONCEAL MODE	OFF
C16 ECC MODE	AL OFF

4. Playback the Alignment tape and Store the waveform on the spectrum Analyzer in TRACE-A.
5. Eject the Alignment tape and insert a Blank tape and record a colour bar 100% signal.

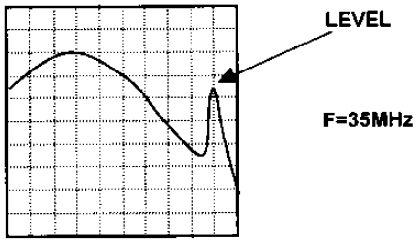

6. Set the TRACE-B mode on Spectrum Analyzer and Adjust VC600 and VC601 so that the peak level of 35MHz portion is minimum.
7. Adjust “C01:REC CUR L” and “C03:REC CUR R” so that the level of 5MHz portion is become -4dB±0.5dB per the waveform of TRACE-A.
8. Adjust “C02:REC FREQ L” and “C04:REC FREQ R” so that the level at 20MHz portion is become maximum.

   POINT:

   Set the confidence playback level is lower less than level of TRACE-A and increase the gain gradually by Search Dial so that the level is maximum.

   Please set the adjustment value in the first place the level is become maximum.
9. Confirm that the error rate is less than -12dB digit on the level meter. (Refer to item 5-3-22)
10. If the level of TRACE-B is not same as TRACE-A, confirm that the level of TRACE-B is within 0 to -2dB against TRASE-A (spec: 0 to -2dB).
11. Record for one minute keeping the above condition. Then

playback the just recorded potion and confirm the error rate is same or better than DVCPRO playback (Refer to item 5-3-22 : equivalent level of DVCPRO Alignment tape playback).

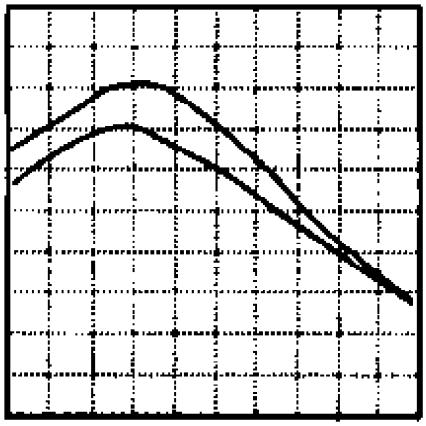

*** ITEM PARAMETER**

REF. LEVEL	**-25dB**
ATT	**10dB**
DIV	**5dB/DIV**
START FREQUENCY	**0KHz**
STOP FREQUENCY	**40MHz**
RES VW	**1MHz**
VBW	**3KHz**
SWEEP	**300msec**
TRIGGER	**EXT (HEAD SW)**

4.5.4.2. Rotary Erase Current Adjustment

BOARD	**RF AMP (H4)**
SPEC.	**1.0 ± 0.12V**
TEST	**TP11, TP12**
ADJUST	**VR13, VR14**
INPUT	**100% Colour Bar**
MODE	**REC/PLAY**
TAPE	**Blank Tape**
M.EQ	**Oscilloscope**

1. **Insert a REC/PLAY tape auto record a 100% colour bar signal.**
2. **Connect a scope to TP11 with 10:1 probe and adjust VR 13 (RE A) so that the DC level is in the specification (1.0V ± 0.12V).**
3. **Then connect the scope to TP12 and adjust VR14 (RE B) so that**

the DC level is in the specification (1.0V ± 0.12V).

4.6. REC PB

4.6.1. PLL Lock DC Level Adjustment

P.C.B.	REC PB (F5)
SPEC.	0.0V ± 0.2V
TEST	TP170
ADJ.	VC170
INPUT	———
MODE	EE
TAPE	———
M.EQ	Oscilloscope, Monitor TV

1. Adjust VC170 so that the DC level is in specification.

Note:
Confirm that the colour bar picture has no noise by watching the monitor TV.

4.6.2. Audio VCO Center Freq. Adjustment

P.C.B.	REC PB (F5)
SPEC.	48kHz Mode: 48.00kHz ± 0.1kHz 44kHz Mode: 44.10kHz ± 0.1kHz 32kHz Mode: 32.00kHz ± 0.1kHz
TEST	TP460
ADJ.	VR460 (48kHz), VR461 (44kHz), VR462 (32kHz)
INPUT	———
MODE	EE
TAPE	———
M.EQ	Oscilloscope, Frequency Counter, Monitor TV

1. Open the “E00:AUDIO ADJUST” menu on the Service Menu.
2. Select the item “E06:A VCO ADJ” and it setting follow the adjustment frequency as indicated as below procedure..

E06	: A VCO ADJ	48kHz
E06	: A VCO ADJ	44kHz
E06	: A VCO ADJ	32kHz

3. Set the item “E06:A VCO ADJ” to 48kHz and adjust VR460 so that the frequency is 48.00kHz ± 0.1kHz.

4. Set the item “E06:A VCO ADJ” to 44kHz and adjust VR461 so that the frequency is 44.10kHz ± 0.1kHz.
5. Set the item “E06:A VCO ADJ” to 32kHz and adjust VR462 so that the frequency is 32.00kHz ± 0.1kHz.
6. Finally, close the Service Menu.

4.7. Video Out P. C. Board (F4) [FOR NTSC ONLY]

Please warm up the VTR about 10 minute before adjustment.
CONNECTION

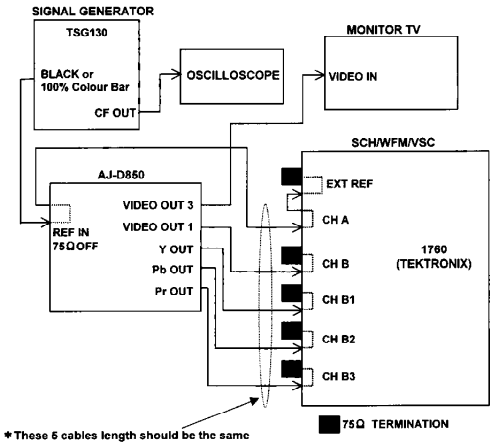

4.7.1. REF PLL Center Adjustment

P.C.B.	V_OUT (F4)
SPEC.	0V± 0.1VDC
TEST	TP70 (D-1)
ADJ.	VC70 (D-1)
INPUT	EXT REF IN: Composite 75% Color Bar
MODE	EE
TAPE	———
M.EQ	Oscilloscope

1. Adjust VC70 so that the voltage is 0V± 0.1VDC.

4.7.2. REF CF Detection Adjustment

P.C.B.	**V_OUT (F4)**
SPEC.	**See Figure, A = B±5%**
TEST	**TP105 (E-4), CF Out of Signal SG** **TP100 (E-1), TP101 (E-1)**
ADJ.	**VR100 (C-1)**
INPUT	**EXT REF IN: Composite 75% Color Bar**
MODE	**EE**
TAPE	**———**
M.EQ	**Oscilloscope**

1. **Connect the oscilloscope CH1 to the CF output of composite signal generator and CH2 to TP105.**
2. **Adjust VR100 so that the phase is synchronized between CF pulses and TP105 as shown in figure.**

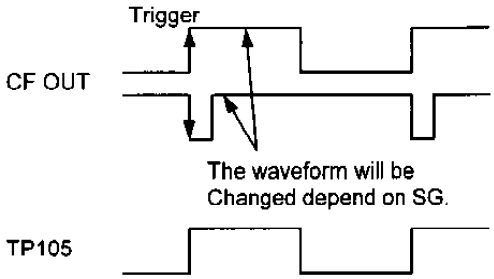

3. **Connect the oscilloscope CH1 to TP101 and CH2 to TP100.**
4. **Expand (delay) the rising edge of TP100.**
5. **Slowly and slightly rotate VR100 so that the rising edge of TP101 is positioned at the center of cross point between A and B of waveform at TP100.**

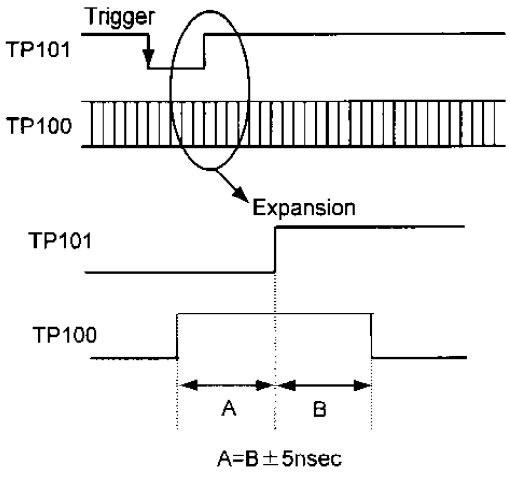

4.7.3. Ref. H Phase Adjustment

P.C.B.	V_OUT (F4)
SPEC.	T = 5.3±0.1us
TEST	TP102 (E-1), TP651 (F-2)
ADJ.	VR101 (C-1)
INPUT	EXT REF IN: Composite 75% Color Bar
MODE	EE
TAPE	———
M.EQ	Oscilloscope

1. Connect the oscilloscope CH1 to TP102 and CH2 to TP651.
2. Adjust VR101 so that the timing of the pulses at TP651 and TP102 is as shown in below.

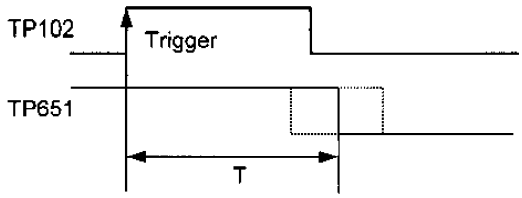

4.7.4. Composite Set-up Adjustment

P.C.B.	V_OUT (F4)
SPEC.	Set-up Level = Pedestal Level±1RE
TEST	VIDEO OUT 1
ADJ.	VR902 (G-1)
INPUT	———
MODE	PLAY
TAPE	VFM3580KM (75% Color Bar portion)
M.EQ	Waveform Monitor

1. Open the VIDEO ADJUST menu on Service Menu and set item “D08: V SETUP” to ON.
2. Set the item “613:V IN SETUP” and “614:V OUT SETUP” to “THRU” on SET UP menu.
3. Adjust VR902 so that the set-up level is the same level as the pedestal level.

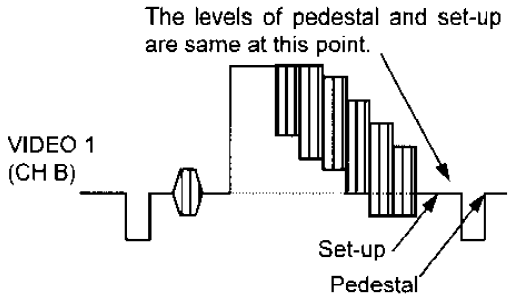

4.7.5. Sync Level Adjustment

P.C.B.	**V_OUT (F4)**
SPEC.	**40IRE±1%**
TEST	**VIDEO OUT 1**
ADJ.	**VR950 (F-1)**
INPUT	**———**
MODE	**PLAY**
TAPE	**VFM3580KM (75% Color Bar portion)**
M.EQ	**Waveform Monitor**

1. Adjust VR950 so that the Sync Level is 40IRE±1%.

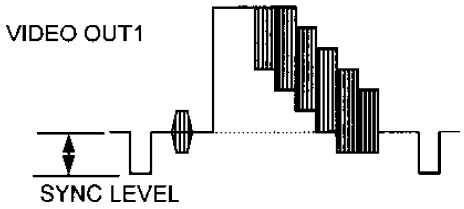

4.7.6. Carrier Balance Adjustment

P.C.B.	**V_OUT (F4)**
SPEC.	**Cross point “A” at the center of scope.**
TEST	**REF IN (CH A), VIDEO OUT 1 (CH B)**
ADJ.	**VR806 (H-1), VR807 (H-1)**
INPUT	**EXT REF IN**
MODE	**PLAY**
TAPE	**VFM3580KM (75% Color Bar portion)**
M.EQ	**Vector Scope**

1. Adjust VR806 (PB BAL) and VR807 (PR BAL) so that the cross point “A” is positioned at the center of the vector scope.

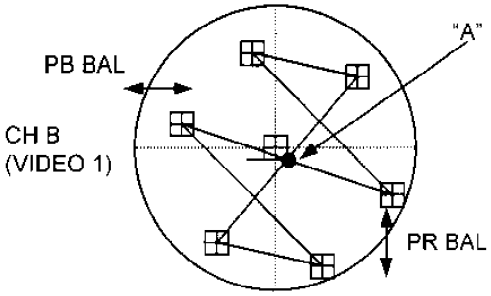

4.7.7. Composite Y Level Adjustment

P.C.B.	**V_OUT (F4)**
SPEC.	**100IRE±1%**
TEST	**VIDEO OUT 1**
ADJ.	**VR900 (G-1)**
INPUT	**———**
MODE	**PLAY**
TAPE	**VFM3580KM (75% Color Bar portion)**
M.EQ	**Waveform Monitor**

1. Adjust VR900 so that the Y level is 100IRE±1%.

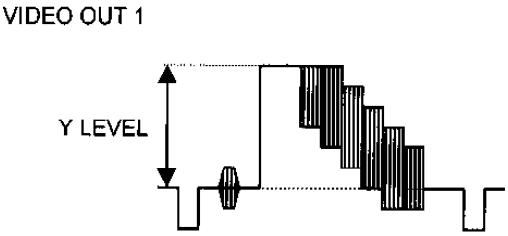

4.7.8. Composite Y Frequency Response Adjustment

P.C.B.	**V_OUT (F4)**
SPEC.	**5.5MHz = Less than -0.5dB**
TEST	**Y OUT**
ADJ.	**VR901 (G-1)**
INPUT	**———**
MODE	**PLAY**
TAPE	**VFM3580KM (H-Sweep portion)**
M.EQ	**Waveform Monitor**

1. Adjust VR901 so that the frequency response becomes flat.
a) The level of 5.5MHz portion is less than -0.5dB.
b) The middle frequency is flat.

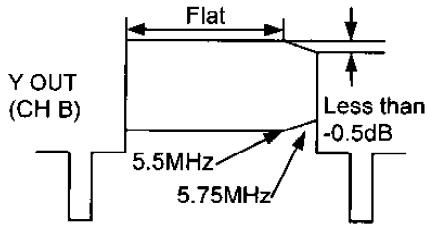

4.7.9. Vector Adjustment

P.C.B.	**V_OUT (F4)**
SPEC.	**All vectors are in the Inner Boxes**
TEST	**VIDEO OUT 1**
ADJ.	**VR801 (H-1), VR802 (I-1)** **VR803 (H-1), VR804 (I-1)**
INPUT	**———**
MODE	**PLAY**
TAPE	**VFM3580KM (75% Color Bar portion)**
M.EQ	**Vector Scope**

1. **Set the burst position on the Vector Scope at correct position.**
2. **Adjust the following VR's so that the color bar's each vector points are in the square mark on the vector scope.**
   VR804 : Quad Phase
   VR801 : Hue Phase
   VR803 : Encode PB Level
   VR802 : Encode PR Level

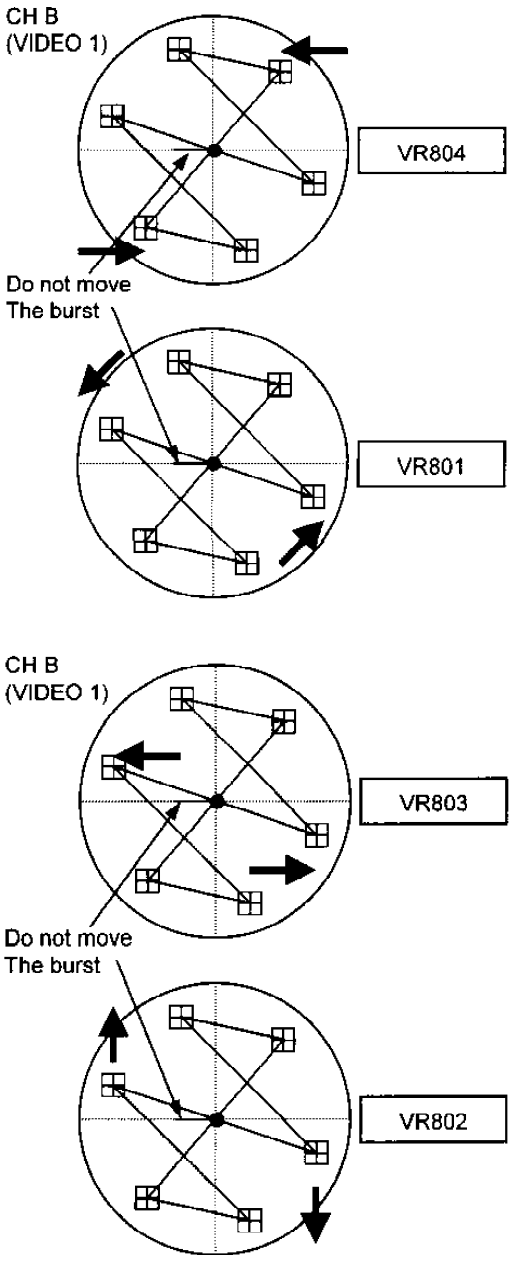

4.7.10. Composite Pb/Pr Timing Adjustment

P.C.B.	**V_OUT (F4)**
SPEC.	**0±10nsec**
TEST	**VIDEO OUT 1**
ADJ.	**VR703 (H-3)**
INPUT	**———**
MODE	**PLAY**
TAPE	**VFM3580KM (Bowtie portion)**
M.EQ	**Vector Scope**

1. **Adjust VR703 so that the signal on the vector scope becomes 1 straight lines (X) as shown in figure.**

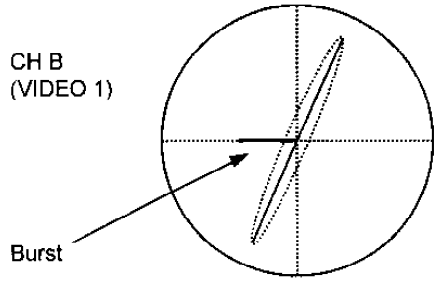

4.7.11. Composite Y/C Timing Adjustment

P.C.B.	**V_OUT (F4)**
SPEC.	**0±10nsec (C = less than 1%)**
TEST	**VIDEO OUT 1**
ADJ.	**VR903 (G-1)**
INPUT	**———**
MODE	**PLAY**
TAPE	**VFM3580KM (Pulse Bar portion)**
M.EQ	**Waveform Monitor**

1. **Adjust VR903 so that the portion A and B are become symmetric left and right and level of portion C less than 1% against level of waveform 100% as shown in figure.**
2. **When performing this adjustment, the level of waveform may be changed. Therefore, level of waveform is adjusted by Chroma VR on the front panel during this adjustment.**
3. **After finish this adjustment set the Chroma VR to preset position.**
4. **After completion of this adjustment, “6-12. Sub-Carrier Phase Adjustment” should be performed.**

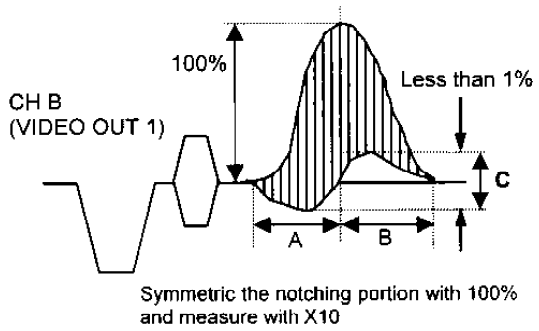

4.7.12. Sub-Carrier Phase Adjustment

P.C.B.	V_OUT (F4)
SPEC.	0±1degree
TEST	VIDEO OUT 1, REF IN
ADJ.	VR160 (C-1)
INPUT	REF IN: Composite 75% Color Bar
MODE	PLAY
TAPE	VFM3580KM (75% Color Bar portion)
M.EQ	SCH Meter

1. Adjust VR160 so that the SCH of VIDEO OUT is same as EXT-REF-IN, then SCH phase should be become 0±1 degree.

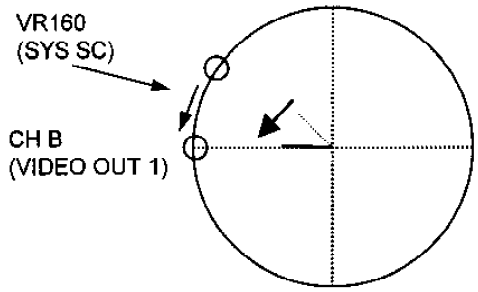

4.7.13. Burst Adjustment

P.C.B.	V_OUT (F4)
SPEC.	PHASE: 0±1degree LEVEL: 40±0.4IRE
TEST	VIDEO OUT 1
ADJ.	VR280 (C-1), VR805 (I-1)
INPUT	REF IN: Composite 75% Color Bar
MODE	PLAY
TAPE	VFM3580KM (75% Color Bar portion)
M.EQ	SCH Meter

1. Adjust VR280 while changing the channels A and B of the SCH meter alternately so that the SCH is 0 degree.
2. Adjust VR805 while changing the channels A and B of the SCH meter alternately so that the burst level and burst phase are become same between VIDEO 1 OUT (CHB) and REF (CHA),then burst level is should be become 40±0.4IRE.

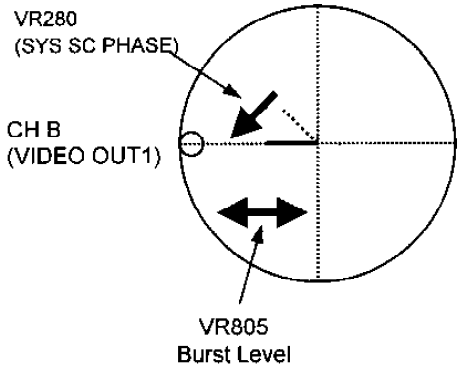

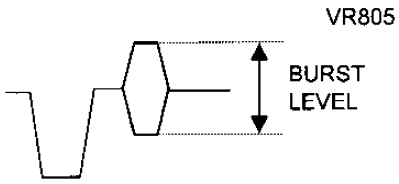

Level adjustment is enable by WFM

4.7.14. Burst Position Adjustment

P.C.B.	**V_OUT (F4)**
SPEC.	**A = B±5%**
TEST	**VIDEO OUT 1, REF IN**
ADJ.	**VR201 (A-1)**
INPUT	**REF IN: Composite 75% Color Bar**
MODE	**PLAY**
TAPE	**VFM3580KM (75% Color Bar portion)**
M.EQ	**Waveform Monitor**

1. Adjust VR201 while changing the channels A and B of the vector scope alternately so that the center of the burst of the reference and VIDEO OUT 1 are phase synchronized and level difference between A and B portion in specification.

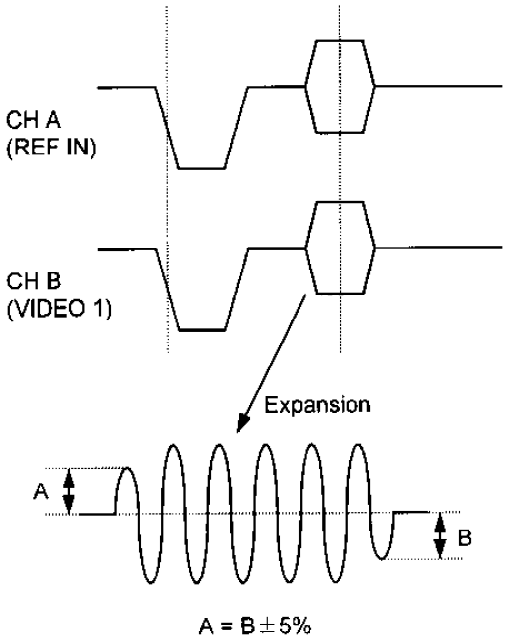

4.7.15. Confirmation of Vector

P.C.B.	**V_OUT (F4)**
SPEC.	**All vectors are in the Inner Boxes**
TEST	**VIDEO OUT 1**
ADJ.	**VR801 (H-1), VR803 (H-1)** **VR802 (I-1), VR800 (H-1)**
INPUT	**———**
MODE	**PLAY**
TAPE	**VFM3580KM (75% Color Bar portion)**
M.EQ	**Vector Scope**

1. **Set the burst position on the Vector Scope at correct position.**
2. **Confirm that the color bar's each vector points are in the square mark on the vector scope.**
3. **If out of specification, adjust the following VR's so that the color bar's each vector points are in the square mark on the vector scope. (Refer to item 7-9. Vector Adjustment).**
   VR804 : Quad Phase
   VR801 : Hue Phase
   VR803 : Encode PB Level
   VR802 : Encode PR Level

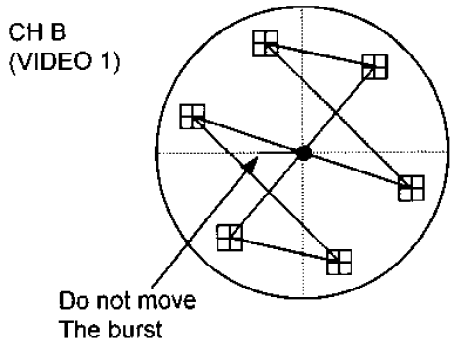

4.7.16. Component Ref. H & Sub-Carrier Phase Adjustment

P.C.B.	**V_OUT (F4)**
SPEC.	**T = 5.3±0.1usec** **0±10nsec**
TEST	**TP102, TP651** **VIDEO OUT 1, EXT REF IN**
ADJ.	**VR102 (C-1)**
INPUT	**REF IN : 75% Color Bar** **(without burst: Component Y)**
MODE	**EE**
TAPE	**VFM3580KM (75% Color Bar portion)**
M.EQ	**Oscilloscope, Waveform Monitor**

1. Connect the oscilloscope CH1 to TP102 and CH2 to TP651.

2. Adjust VR102 so that the timing of the phase at TP102 and TP651 are as shown in below.

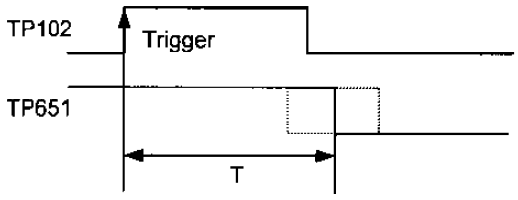

3. Playback the color bar portion of Alignment tape.

4. Adjust VR102 so that the phase synchronized within 0±10nsec between REF IN (CHA) and Video 1 Out (CHB) as shown in figure.

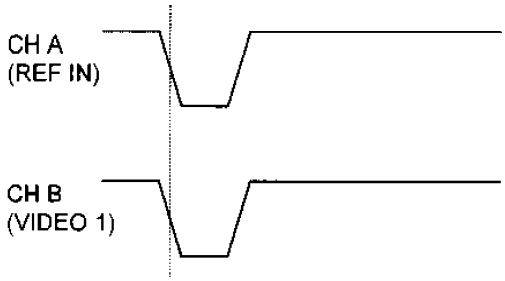

4.7.17. Component Y Level Adjustment

P.C.B.	V_OUT (F4)
SPEC.	V = 700mV±7mV
TEST	COMPONENT Y OUT
ADJ.	VR700 (I-1)
INPUT	———
MODE	PLAY
TAPE	VFM3580KM (75% Color Bar portion)
M.EQ	Waveform Monitor

1. Set the SW950 to MII side on V OUT P.C.Board..

2. Adjust VR700 so that the V level is 700mV±7mV.

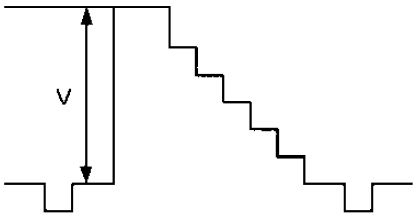

4.7.18. Video Phase Adjustment

P.C.B.	V_OUT (F4)
SPEC.	T = 1.26±0.02usec
TEST	Y OUT
ADJ.	VR260 (A-1)
INPUT	———
MODE	PLAY
TAPE	VFM3580KM (Area Marker portion)
M.EQ	Waveform Monitor

1. Open the Video Adjust menu on Service menu and set item “D01: VIDEO BLANK” to OFF position.

2. Adjust VR260 so that the timing T is within specification.

3. After finish this adjustment, set to ON position of item “D01: VIDEO BLANK”.

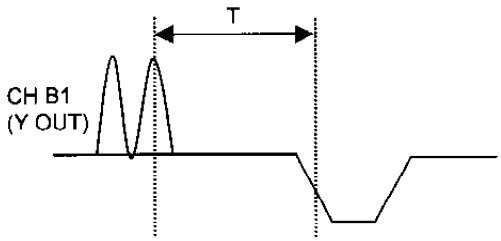

4.7.19. Component Y Frequency Response Adjustment

P.C.B.	V_OUT (F4)
SPEC.	5.5MHz = Less than -0.5dB
TEST	COMPONENT Y OUT
ADJ.	VR701 (I-2)
INPUT	———
MODE	PLAY
TAPE	VFM3580KM (H Sweep portion)
M.EQ	Waveform Monitor

1. Adjust VR701 so that the frequency response becomes flat.

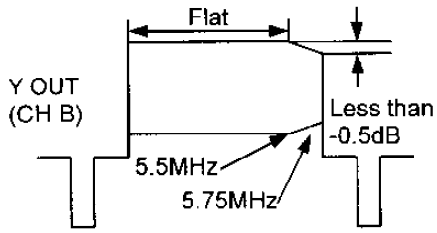

4.7.20. Component Pb Level Adjustment

P.C.B.	V_OUT (F4)
SPEC.	525mV±5mV
TEST	COMPONENT PB OUT
ADJ.	VR706 (J-1)
INPUT	———
MODE	PLAY
TAPE	VFM3580KM (75% Color Bar portion)
M.EQ	Waveform Monitor

1. Set the SW950 to MII side on V OUT P.C.Board..

2. Adjust VR706 so that the Pb level of component out is within specification.

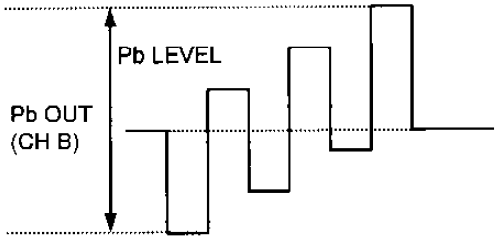

4.7.21. Component Pr Level Adjustment

P.C.B.	V_OUT (F4)
SPEC.	525mV±5mV
TEST	COMPONENT Pr OUT
ADJ.	VR704 (H-2)
INPUT	———
MODE	PLAY
TAPE	VFM3580KM (75% Color Bar portion)
M.EQ	Waveform Monitor

1. Set the SW950 to MII side on V OUT P.C.Board..
2. Adjust VR704 so that the Pr level of component out is within specification.

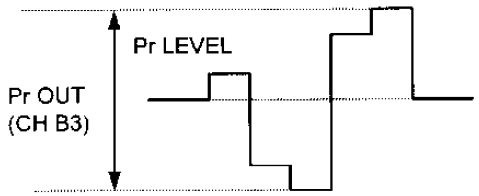

4.7.22. Component Y/Pb Timing Adjustment

P.C.B.	V_OUT (F4)
SPEC.	0±10nsec
TEST	COMPONENT Y OUT, PB OUT
ADJ.	VR705 (J-2)
INPUT	———
MODE	PLAY
TAPE	VFM3580KM (Bowtie portion)
M.EQ	Waveform Monitor

1. **Set the waveform monitor in the YC timing measuring mode (CH B1 + CH B2).**
2. **Adjust VR705 so that the cross point of the envelope is at the center.**

Note:

Incase of WFM monitor does not have Y-Pb timing adjustment mode, if the oscilloscope have "ADD" and "INVERT" switch, please use those switch for make below waveform.

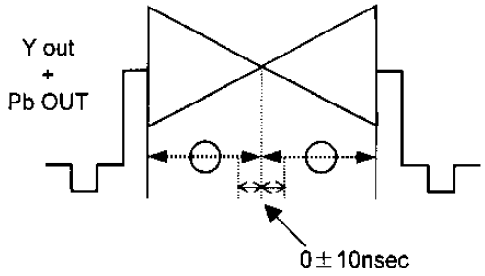

4.7.23. Component Y/Pr Timing Adjustment

P.C.B.	**V_OUT (F4)**
SPEC.	**0±10nsec**
TEST	**COMPONENT Y OUT, Pr OUT**
ADJ.	**VR702 (H-2)**
INPUT	**———**
MODE	**PLAY**
TAPE	**VFM3580KM (Bowtie portion)**
M.EQ	**Waveform Monitor**

1. **Set the waveform monitor in the YC timing measuring mode (CH B1 + CH B2).**
2. **Adjust VR702 so that the cross point of the envelope is at the center.**

Note:

Incase of WFM monitor does not have Y-Pb timing adjustment mode, if the oscilloscope have "ADD" and "INVERT" switch, please use those switch for make below waveform.

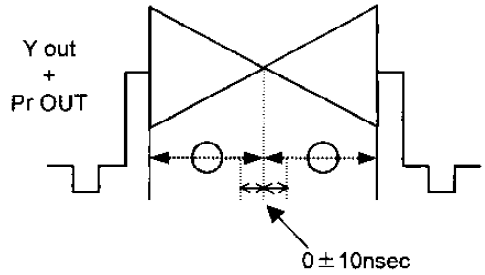

4.7.24. Composite Set up Adjustment (Set up ADD mode)

P.C.B.	V_OUT (F4)
SPEC.	Set up level = 7.5±0.5IRE
TEST	VIDEO 1 OUT
ADJ.	VR905 (G-1)
INPUT	———
MODE	PLAY
TAPE	VFM3580KM (75% Color Bar portion)
M.EQ	Waveform Monitor

1. Set the item “614: VOUT SET UP” to “ADD” on Set-up menu.

2. Adjust VR905 so that the Set-up level is 7.5±0.5IRE.

NOTE:

Signal have carrier leak and noise, therefore set Y-filter mode on WFM monitor.

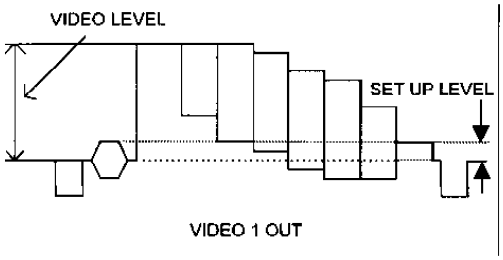

4.7.25. Composite Video Level Adj. (Set up ADD mode)

P.C.B.	V_OUT (F4)
SPEC.	Video level = 100±1 IRE
TEST	VIDEO 1 OUT
ADJ.	VR904 (G-1)
INPUT	———
MODE	PLAY
TAPE	VFM3580KM (75% Color Bar portion)
M.EQ	Waveform Monitor

1. Set the item “614: VOUT SET UP” to “ADD” on Set-up menu.

2. Adjust VR904 so that the Video level is 100±1 IRE.

NOTE:

Signal have carrier leak and noise, therefore set Y-filter mode on WFM monitor.

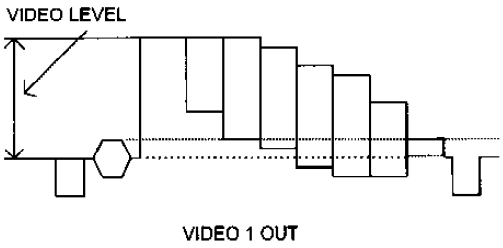

4.7.26. Vector Adjustment (Set up ADD mode)

P.C.B.	V_OUT (F4)
SPEC.	All vectors are in the Inner Boxes
TEST	VIDEO 1 OUT
ADJ.	VR809 (I-1),VR810 (I-1)
INPUT	———
MODE	PLAY
TAPE	VFM3580KM (75% Color Bar portion)
M.EQ	Vector Scope

1. Set the item “614: VOUT SET UP” to “ADD” on Set-up menu.

2. Adjust VR809 (PR) and VR810 (PB) so that the each vector points are in the square mark on the vector scope.

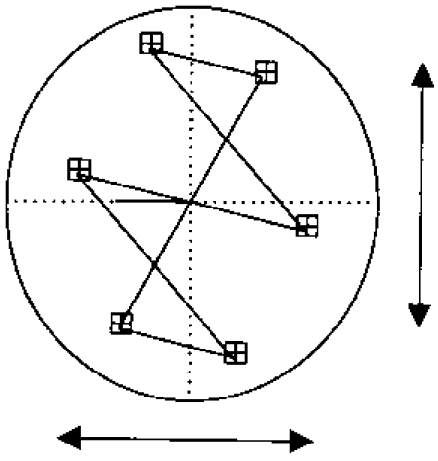

4.8. Video Out P. C. Board (F4) [FOR PAL ONLY]

Please warm up the VTR about 10 minute before adjustment.

CONNECTION

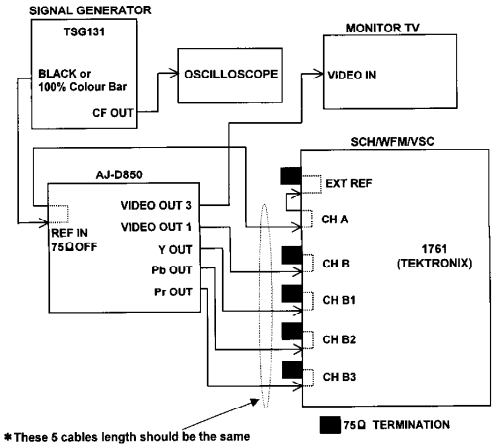

4.8.1. REF PLL Center Adjustment

P.C.B.	**V_OUT (F4)**
SPEC.	**0V± 0.1VDC**
TEST	**TP70 (D-1), TP102**
ADJ.	**VC70 (D-1)**
INPUT	**EXT REF IN: Composite 100% Colour Bar**
MODE	**EE**
TAPE	**———**
M.EQ	**Oscilloscope**

1. Adjust VC70 so that the voltage is 0V± 0.1VDC.

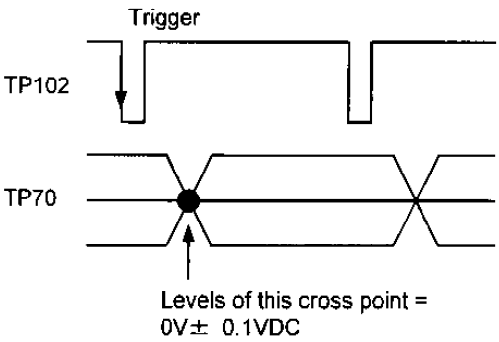

4.8.2. REF CF Detection Adjustment

P.C.B.	V_OUT (F4)
SPEC.	See Figure, A = B±5%
TEST	TP105 (E-4), CF Out of Signal SG TP100 (E-1), TP101 (E-1)
ADJ.	VC100 (C-1)
INPUT	EXT REF IN: Composite 100% Colour Bar
MODE	EE
TAPE	———
M.EQ	Oscilloscope

1. Connect the oscilloscope CH1 to the CF output of composite signal generator and CH2 to TP105.
2. Adjust VR100 so that the phase is synchronized between CF pulses and TP105 as shown in figure.

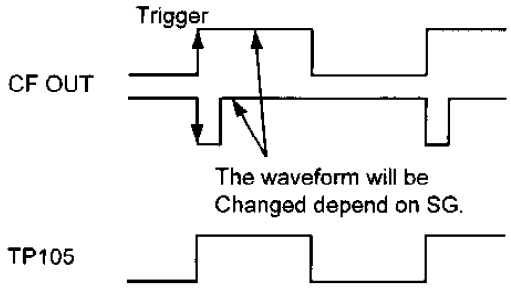

3. Connect the oscilloscope CH1 to TP101 and CH2 to TP100.
4. Expand (delay) the rising edge of TP100.
5. Slowly and slightly rotate VR100 so that the high period of TP100 is positioned at the center of the stable waveform at TP101.

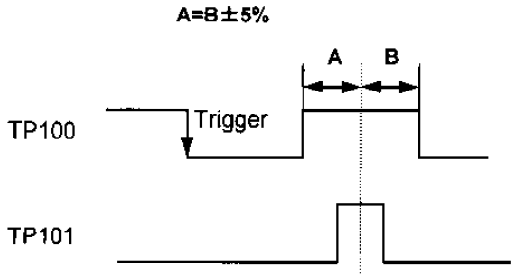

4.8.3. Ref. H Phase Adjustment

P.C.B.	V_OUT (F4)
SPEC.	T = 3.3±0.1us
TEST	TP102 (E-1), TP651 (F-2)
ADJ.	VR101 (C-1)
INPUT	EXT REF IN: Composite 100% Colour Bar
MODE	EE
TAPE	———
M.EQ	Oscilloscope

1. Connect the oscilloscope CH1 to TP102 and CH2 to TP651.
2. Adjust VR101 so that the timing of the pulses at TP651 and TP102 is as shown in below.

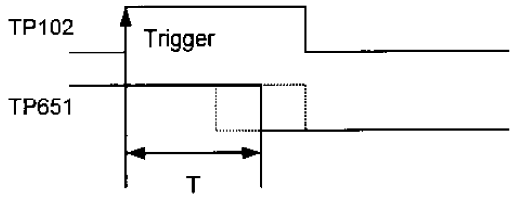

4.8.4. Composite Set-up Adjustment

P.C.B.	V_OUT (F4)
SPEC.	Set-up Level = Pedestal Level±5mV
TEST	VIDEO 1
ADJ.	VR902 (G-1)
INPUT	———
MODE	PLAY
TAPE	VFM3680KM (100% Colour Bar portion)
M.EQ	Waveform Monitor

1. Adjust VR902 so that the set-up level is the same level as the pedestal level.

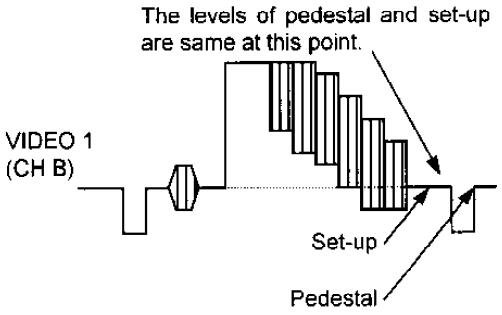

4.8.5. Sync Level Adjustment

P.C.B.	V_OUT (F4)
SPEC.	300mV±3mV
TEST	VIDEO OUT 1
ADJ.	VR950 (F-1)
INPUT	———
MODE	PLAY
TAPE	VFM3680KM (100% Colour Bar portion)
M.EQ	Waveform Monitor

1. Adjust VR950 so that the Sync Level is 300mV±3mV.

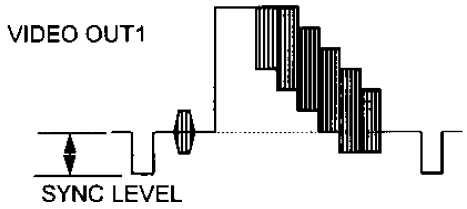

4.8.6. Carrier Balance Adjustment

P.C.B.	V_OUT (F4)
SPEC.	Cross point “A” at the center of scope.
TEST	REF IN (CH A), VIDEO OUT 1 (CH B)
ADJ.	VR806 (H-1), VR807 (H-1)
INPUT	EXT REF IN
MODE	PLAY
TAPE	VFM3680KM (100% Colour Bar portion)
M.EQ	Vector Scope

1. Set the vector scope in the without set-up mode.

2. Adjust VR806 (PB BAL) and VR807 (PR BAL) so that the cross point “A” is positioned at the center of the vector scope.

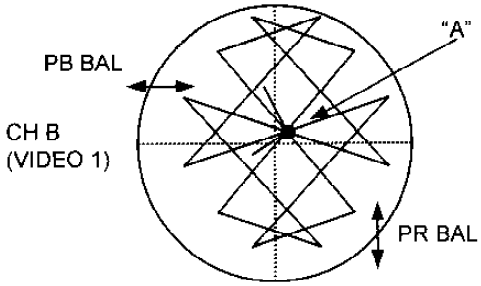

4.8.7. Composite Y Level Adjustment

P.C.B.	V_OUT (F4)
SPEC.	700mV±7mV
TEST	VIDEO 1
ADJ.	VR900 (G-1)
INPUT	———
MODE	PLAY
TAPE	VFM3680KM (100% Colour Bar portion)
M.EQ	Waveform Monitor

1. Adjust VR900 so that the Y level is 700mV±7mV.

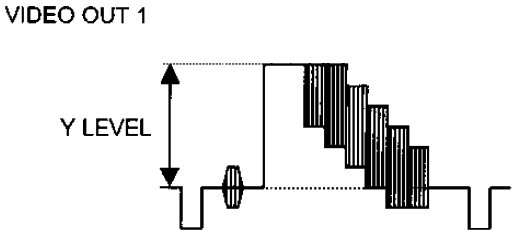

4.8.8. Composite Y Frequency Response Adjustment

P.C.B.	V_OUT (F4)
SPEC.	5.5MHz = Less than -0.5dB
TEST	Y OUT
ADJ.	VR901 (G-1)
INPUT	———
MODE	PLAY
TAPE	VFM3680KM (H-Sweep portion)
M.EQ	Waveform Monitor

1. Adjust VR901 so that the frequency response becomes flat.
a) The level of 5.5MHz portion is less than -0.5dB.
b) The middle frequency is flat.

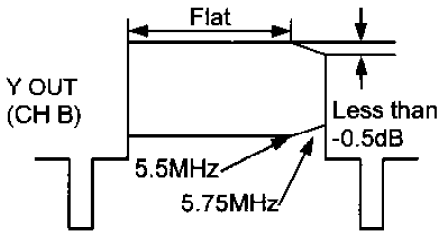

4.8.9. Vector Adjustment

P.C.B.	**V_OUT (F4)**
SPEC.	**All vectors are in the Inner Boxes**
TEST	**VIDEO OUT 1**
ADJ.	**VR804 (I-1), VR801 (H-1), VR803 (H-1) VR802 (I-1), VR800 (H-1)**
INPUT	**———**
MODE	**PLAY**
TAPE	**VFM3680KM (100% Colour Bar portion)**
M.EQ	**Vector Scope**

1. Set the burst position on the Vector Scope at correct position.

2. Adjust the following VR's so that the colour bar's each vector points are in the square mark on the vector scope.
VR804 : Quad Phase
VR801 : Hue Phase
VR803 : Encode PB Level
VR802 : Encode PR Level
VR800 : PAL Phase

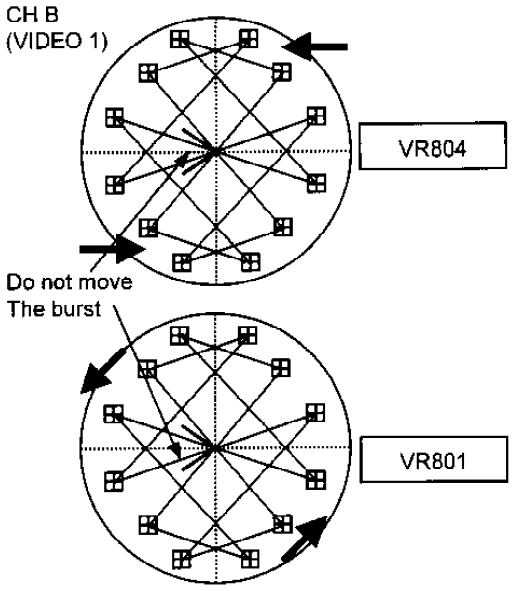

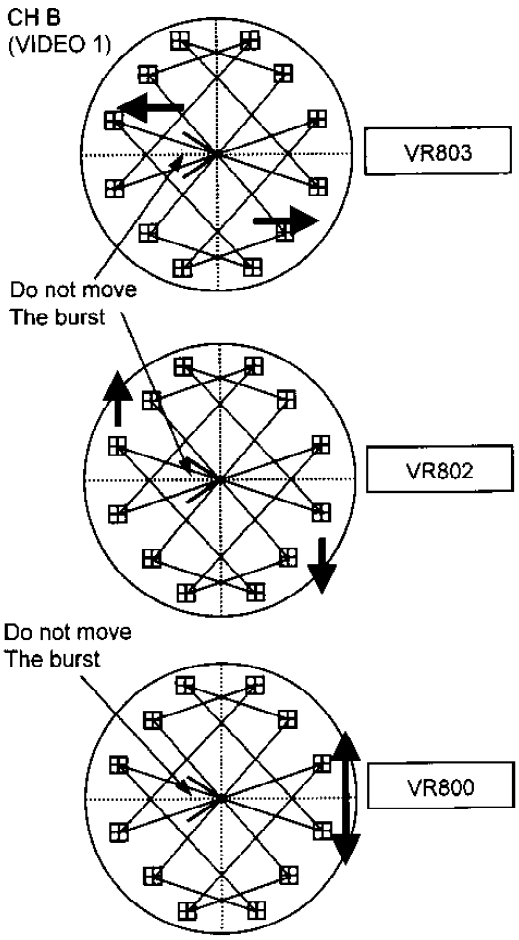

4.8.10. Composite Pb/Pr Timing Adjustment

P.C.B.	**V_OUT (F4)**
SPEC.	**0±10nsec**
TEST	**VIDEO OUT 1**
ADJ.	**VR703 (H-3)**
INPUT	**———**
MODE	**PLAY**
TAPE	**VFM3680KM (Bowtie portion)**
M.EQ	**Vector Scope**

1. Adjust VR703 so that the signal on the vector scope becomes 2 straight lines (X) as shown in figure.

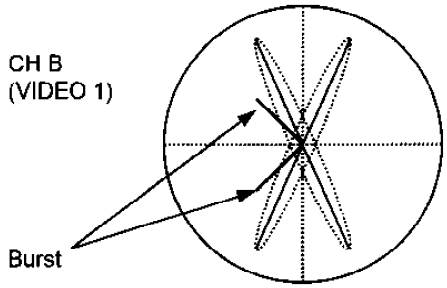

4.8.11. Composite Y/C Timing Adjustment

P.C.B.	**V_OUT (F4)**
SPEC.	**0±10nsec (C = less than 1%)**
TEST	**VIDEO OUT 1**
ADJ.	**VR903 (G-1)**
INPUT	**———**
MODE	**PLAY**
TAPE	**VFM3680KM (Pulse Bar portion)**
M.EQ	**Waveform Monitor**

1. **Adjust VR903 so that the portion A and B are become symmetric left and right and level of portion C less than 1% against level of waveform 100% as shown in figure.**
2. **When performing this adjustment, the level of waveform may be changed. Therefore, level of waveform is adjusted by Chroma VR on the front panel during this adjustment.**
3. **After finish this adjustment set the Chroma VR to preset position.**
4. **After completion of this adjustment, "6-12. Sub-Carrier Phase Adjustment" should be performed.**

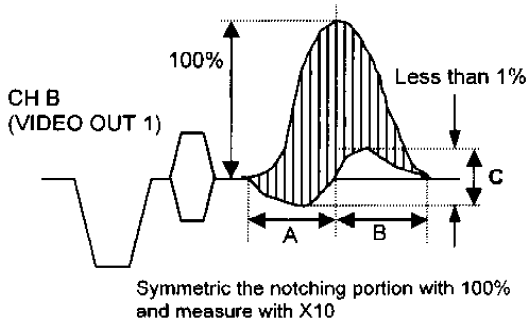

4.8.12. Sub-Carrier Phase Adjustment

P.C.B.	V_OUT (F4)
SPEC.	0±1degree
TEST	VIDEO OUT 1, REF IN
ADJ.	VR160 (C-1)
INPUT	REF IN: Composite 100% Colour Bar
MODE	PLAY
TAPE	VFM3680KM (100% Colour Bar portion)
M.EQ	SCH Meter

1. Adjust VR160 so that the SCH of VIDEO OUT is same as EXT-REF-IN.

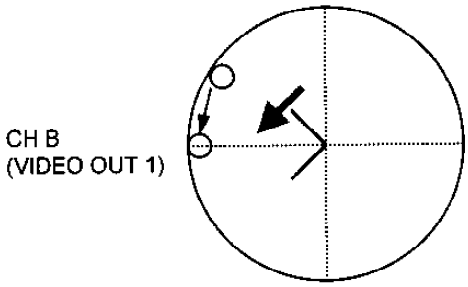

4.8.13. Burst Adjustment

P.C.B.	V_OUT (F4)
SPEC.	0±1degree
TEST	VIDEO OUT 1
ADJ.	VR280 (C-1), VR805 (I-1), VR808 (I-1)
INPUT	REF IN: Composite 100% Colour Ba
MODE	PLAY
TAPE	VFM3680KM (100% Colour Bar portion)
M.EQ	SCH Meter

1. Adjust VR280 while changing the channels A and B of the SCH meter alternately so that the SCH is 0 degree.
2. Adjust VR805 and VR808 while changing the channels A and B of the SCH meter alternately so that the burst level and burst phase are become same between VIDEO 1 OUT (CHB) and REF (CHA).

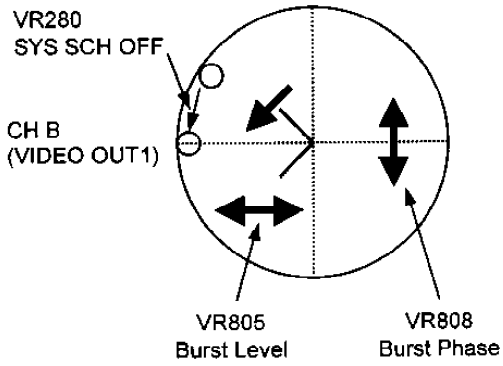

4.8.14. Burst Position Adjustment

P.C.B.	**V_OUT (F4)**
SPEC.	**A = B±5%**
TEST	**VIDEO OUT 1, REF IN**
ADJ.	**VR201 (A-1)**
INPUT	**REF IN: Composite 100% Colour Bar**
MODE	**PLAY**
TAPE	**VFM3680KM (100% Colour Bar portion)**
M.EQ	**Waveform Monitor**

1. Adjust VR201 while changing the channels A and B of the vector scope alternately so that the center of the burst of the reference and VIDEO OUT 1 are phase syncronized.

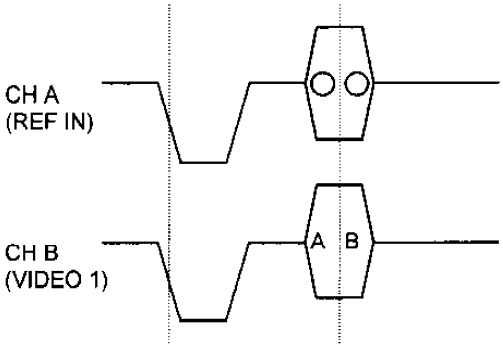

4.8.15. Confirmation of Vector

P.C.B.	V_OUT (F4)
SPEC.	All vectors are in the Inner Boxes
TEST	VIDEO OUT 1
ADJ.	VR804 (I-1), VR801 (H-1), VR803 (H-1) VR802 (I-1), VR800 (H-1)
INPUT	———
MODE	PLAY
TAPE	VFM3680KM (100% Colour Bar portion)
M.EQ	Vector Scope

1. Set the burst position on the Vector Scope at correct position.
2. Confirm that the colour bar's each vector points are in the square mark on the vector scope.
3. If out of specification, adjust the following VR's so that the colour bar's each vector points are in the square mark on the vector scope. (Refer to item 6-9. Vector Adjustment).
   VR804 : Quad Phase
   VR801 : Hue Phase
   VR803 : Encode PB Level
   VR802 : Encode PR Level
   VR800 : PAL Phase

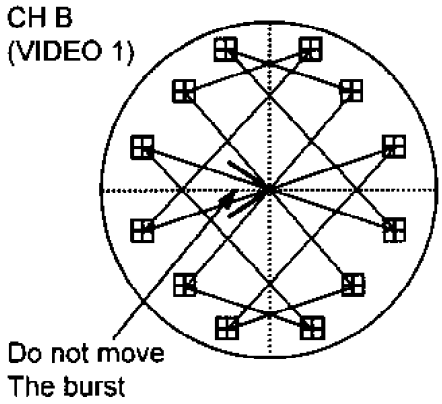

4.8.16. Component Ref. H & Sub-Carrier Phase Adjustment

P.C.B.	V_OUT (F4)
SPEC.	T = 3.3±0.1usec 0±10nsec
TEST	TP102, TP651 VIDEO OUT 1, EXT REF IN
ADJ.	VR102 (C-1)
INPUT	REF IN : 100% colour bar (without burst: Component Y)
MODE	EE
TAPE	———
M.EQ	Oscilloscope, Waveform Monitor

1. Connect the oscilloscope CH1 to TP102 and CH2 to TP651.
2. Adjust VR102 so that the timing of the phase at TP102 and TP651 are as shown in below.

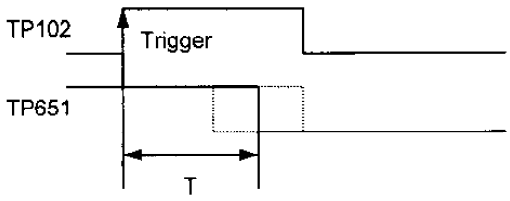

3. Set the waveform monitor in the EXT-REF mode.
4. Adjust VR102 so that the phase synchronized between REF IN (CHA) and Video 1 Out (CHB) as shown in figure.

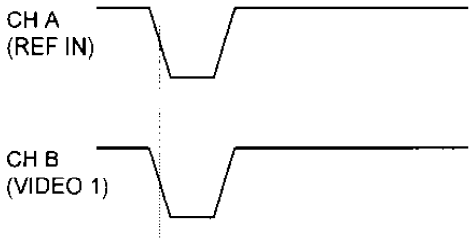

4.8.17. Component Y Level Adjustment

P.C.B.	V_OUT (F4)
SPEC.	V = 700mV±7mV
TEST	COMPONENT Y OUT
ADJ.	VR700 (I-1)
INPUT	———
MODE	PLAY
TAPE	VFM3680KM (100% Colour Bar portion)
M.EQ	Waveform Monitor

1. Adjust VR700 so that the V level is 700mV±7mV.

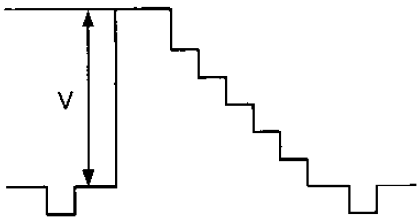

4.8.18. Video Phase Adjustment

P.C.B.	V_OUT (F4)
SPEC.	T = 0.96±0.02usec
TEST	Y OUT
ADJ.	VR260 (A-1)
INPUT	———
MODE	PLAY
TAPE	VFM3680KM (Area Marker portion)
M.EQ	Waveform Monitor

1. Open the Video Adjust menu on Service menu and set item “D01: VIDEO BLANK” to OFF position.
2. Adjust VR260 so that the timing T is within specification.
3. After finish this adjustment, set to ON position of item “D01: VIDEO BLANK”.

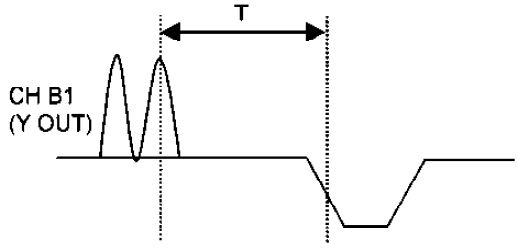

4.8.19. Component Y Frequency Response Adjustment

P.C.B.	V_OUT (F4)
SPEC.	5.5MHz = Less than -0.5dB
TEST	COMPONENT PB OUT
ADJ.	VR701 (I-2)
INPUT	———
MODE	PLAY
TAPE	VFM3680KM (H Sweep portion)
M.EQ	Waveform Monitor

1. Adjust VR701 so that the frequency response becomes flat.

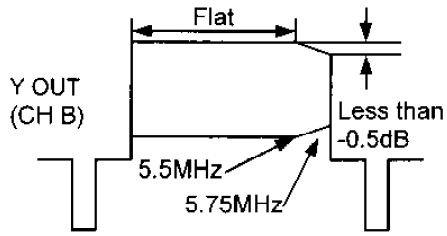

4.8.20. Component Pb Level Adjustment

P.C.B.	V_OUT (F4)
SPEC.	700mV±7mV
TEST	COMPONENT PB OUT
ADJ.	VR706 (J-1)
INPUT	———
MODE	PLAY
TAPE	VFM3680KM (100% Colour Bar portion)
M.EQ	Waveform Monitor

1. Adjust VR706 so that the Pb level of component out is within specification.

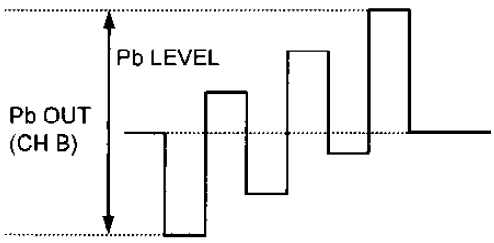

4.8.21. Component Pr Level Adjustment

P.C.B.	V_OUT (F4)
SPEC.	700mV±7mV
TEST	COMPONENT Pr OUT
ADJ.	VR704 (H-2)
INPUT	———
MODE	PLAY
TAPE	VFM3680KM (100% Colour Bar portion)
M.EQ	Waveform Monitor

1. Adjust VR704 so that the Pr level of component out is within specification.

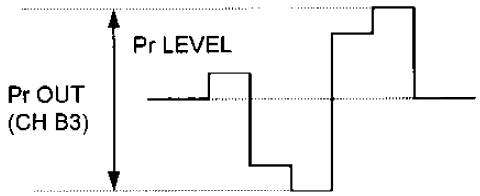

4.8.22. Component Y/Pb Timing Adjustment

P.C.B.	V_OUT (F4)
SPEC.	0±10nsec
TEST	COMPONENT Y OUT, PB OUT
ADJ.	VR705 (J-2)
INPUT	———
MODE	PLAY
TAPE	VFM3680KM (Bowtie portion)
M.EQ	Waveform Monitor

1. Set the waveform monitor in the YC timing measuring mode (CH B1 + CH B2).
2. Adjust VR705 so that the cross point of the envelope is at the center.

Note:

Incase of WFM monitor does not have Y-Pb timing adjustment mode, if the oscilloscope have "ADD" and "INVERT" switch, please use those switch for make below waveform.

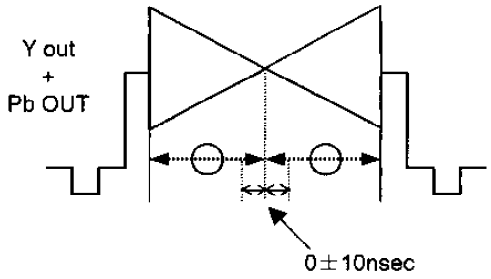

4.8.23. Component Y/Pr Timing Adjustment

P.C.B.	V_OUT (F4)
SPEC.	0±10nsec
TEST	COMPONENT Y OUT, Pr OUT
ADJ.	VR702 (H-2)
INPUT	———
MODE	PLAY
TAPE	VFM3680KM (Bowtie portion)
M.EQ	Waveform Monitor

1. Set the waveform monitor in the YC timing measuring mode (CH B1 + CH B2).
2. Adjust VR702 so that the cross point of the envelope is at the center.

Note:

Incase of WFM monitor does not have Y-Pb timing adjustment mode, if the oscilloscope have "ADD" and "INVERT" switch, please use those switch for make below waveform.

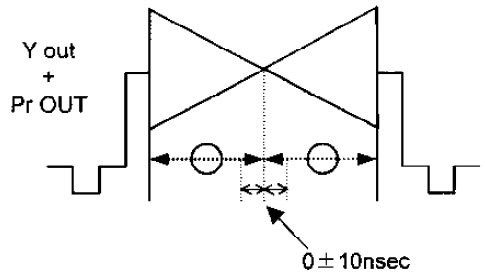

4.9. V IN P. C. Board [FOR NTSC ONLY]

4.9.1. Preparation for Video In Adjustment

1. Connect the equipment as shown in the figure.
2. V IN P.C.Board adjustment should be performed after the V OUT P.C.Board adjustment.
3. Set the menu and SW as follows.

SET UP MENU 613: V IN SETUP → THOU
614: V OUT SETUP → THOU
600: PB PR IN LV → MII
- **SW950 → MII (V OUT P.C.Board.)**

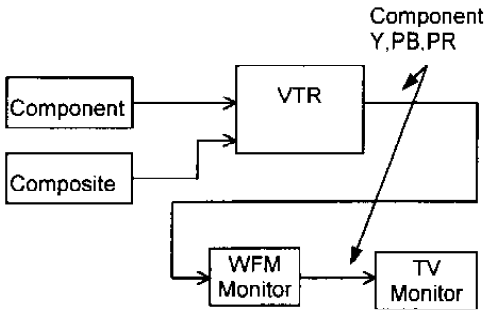

4.9.2. 13.5MHz VCO Adjustment

P.C.B.	**V_IN (F6)**
SPEC.	**0V± 0.1V**
TEST	**TP601**
ADJ.	**VL601, VR602**
INPUT	**Component 100% Color Bar**
MODE	**EE**
TAPE	**———**
M.EQ	**Oscilloscope**

1. Set VR602 below figure indicated position.

2. Adjust VL601 so that the DC Voltage is 0V± 0.1V.

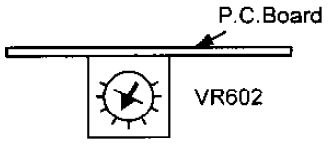

TURN RIGHT 1 SCALE (30 degrees) from the center.

4.9.3. Component Y Timing Adjustment

P.C.B.	**V_IN (F6)**
SPEC.	**Phase synchronized between REF IN and VIDEO OUT 1.**
TEST	**REF IN, VIDEO OUT 1**
ADJ.	**VR601**
INPUT	**Composite 100% Color Bar**
MODE	**EE**
TAPE	**———**
M.EQ	**WFM Monitor**

1. Connect the cables as indicated as below.

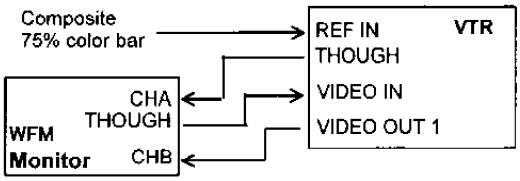

2. Expand the GREEN portion of color bar signal.

3. Adjust VR601 while change the CHA and CHB of WFM monitor so that the phase synchronized between CHA (REF IN) and CHB (VIDEO OUT).

NOTE:

This adjustment should be performed after V OUT P.C.Board adjustment.

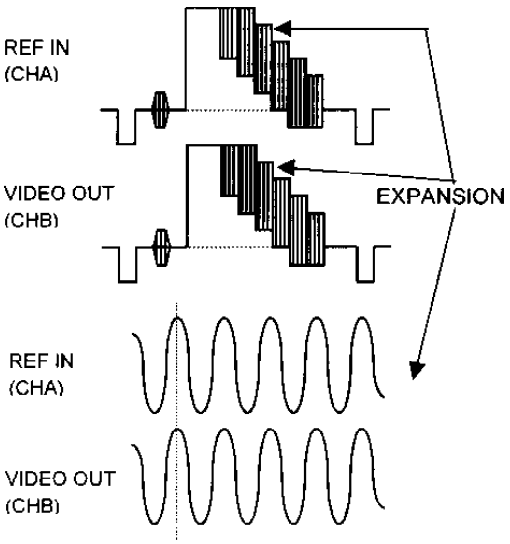

4.9.4. Component Y Level Adjustment

P.C.B.	V_IN (F6)
SPEC.	V1 = 0V±7mV, V2 = 700mV±7mV
TEST	Y OUT
ADJ.	VR702, VR701
INPUT	Component 100% Color Bar
MODE	EE
TAPE	———
M.EQ	Waveform Monitor

1. Adjust VR702 so that the V1 is 0V±7mV.
2. Adjust VR701 so that the V2 is 700mV±7mV.

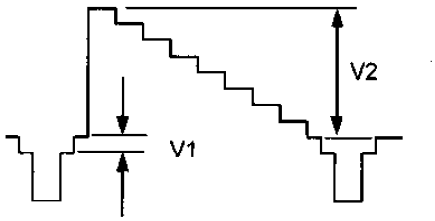

4.9.5. Component PB Level Adjustment

P.C.B.	V_IN (F6)
SPEC.	V1 = 0V±7mV, V2 = 700mV±7mV
TEST	PB OUT
ADJ.	VR752, VR753
INPUT	Component 100% Color Bar
MODE	EE
TAPE	———
M.EQ	Waveform Monitor

1. Adjust VR752 so that the V1 is 0±7mV.
2. Adjust VR753 so that the V2 is 700m±7mV.

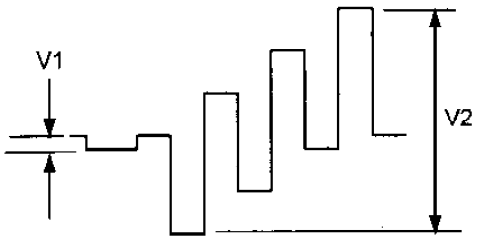

4.9.6. Component PR Level Adjustment

P.C.B.	V_IN (F6)
SPEC.	V1 = 0V±7mV, V2 = 700mV±7mV
TEST	PR OUT
ADJ.	VR802, VR803
INPUT	Component 100% Color Bar
MODE	EE
TAPE	———
M.EQ	Waveform Monitor

1. Adjust VR802 so that the V1 is 0V±7mV.
2. Adjust VR803 so that the V2 is 700mV±7mV.

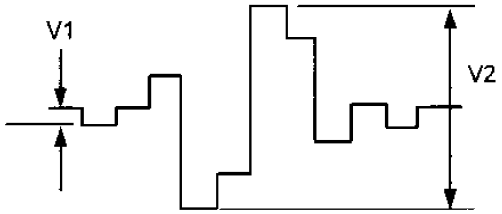

4.9.7. Component Y/C Timing Adjustment

P.C.B.	V_IN (F6)
SPEC.	0±10nsec
TEST	Y, PB, PR OUT
ADJ.	VR751 (PB), VR801 (PR)
INPUT	Component IN : BOWTIE
MODE	EE
TAPE	———
M.EQ	Waveform Monitor

1. Adjust VR751 so that the minimum level of the Y/PB timing signal is 0±10nsec against the center scale.
   Adjust VR801 so that the minimum level of the Y/PB timing signal is 0±10nsec against the center scale.

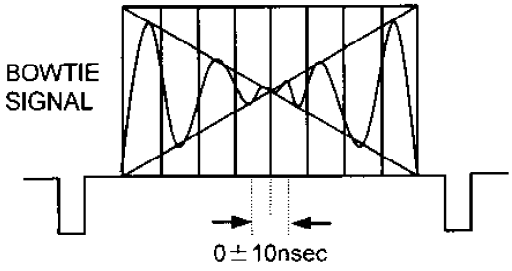

4.9.8. Composite Input Level Adjustment

P.C.B.	V_IN (F6)
SPEC.	V1 = 1.6V±0.02V
TEST	TP1 (SUB P.C.B.), TP351
ADJ.	VR351, VR301
INPUT	COMPOSITE 75% Color Bar (Set up 7.5%)
MODE	EE
TAPE	———
M.EQ	Oscilloscope

1. **Observe TP1 and adjust VR351 at the point where the sync tip just begin to saturate.**
2. **Adjust VR301 so that the voltage at TP351 is 1.6V±0.02V.**

NOTE:

Oscilloscope trigger should be connect to Connector P2-16a

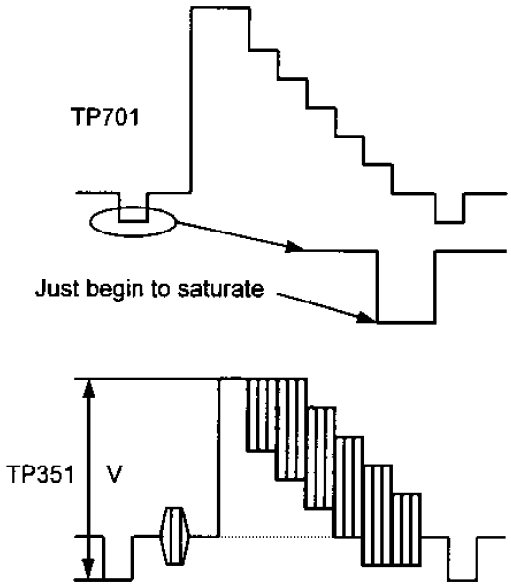

4.9.9. Composite Y Level Adjustment

P.C.B.	V_IN (F6)
SPEC.	V = 700mV±7mV
TEST	Y OUT
ADJ.	VR352
INPUT	COMPOSITE 75% Color Bar (Set up 7.5%)
MODE	EE
TAPE	———
M.EQ	Waveform Monitor

1. Adjust VR455 so that the V is 700mV±7mV.

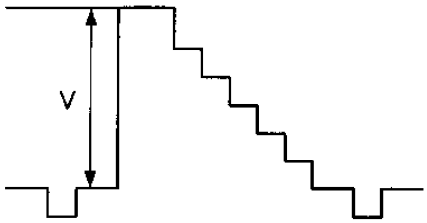

4.9.10. Composite Chroma Level Adj.

P.C.B.	V_IN (F6)
SPEC.	V = 400mV±20mV
TEST	TP503, GND:TG4
ADJ.	VR451
INPUT	COMPOSITE 75% Color Bar (Set up 7.5%)
MODE	EE
TAPE	———
M.EQ	Waveform Monitor

1. Adjust VR451 so that the V is 400mV±20mV.

NOTE:

Oscilloscope trigger should be connect to Connector P2-16a.

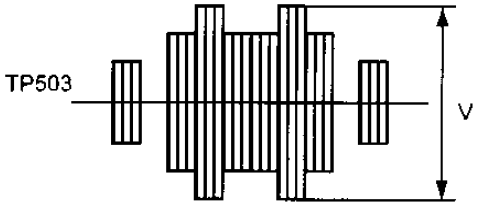

4.9.11. Composite Color Demodulation Adjustment

P.C.B.	V_IN (F6)
SPEC.	See figure
TEST	TP501, GND:TG4
ADJ.	VR501, VR512
INPUT	COMPOSITE 75% Color Bar (Set up 7.5%)
MODE	EE
TAPE	———
M.EQ	Oscilloscope

1. Turn VR512 to fully counter-clockwise.
2. Adjust VR501 so that the noise portion is positioned on the top of A portion as shown in figure.
3. Adjust VR512 so that the level V is become 0Vp-p.

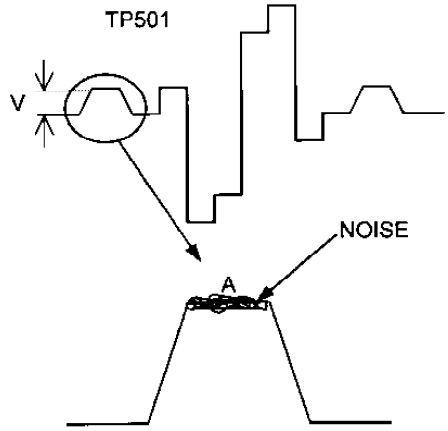

4.9.12. Composite PB Level Adjustment

P.C.B.	V_IN (F6)
SPEC.	V = 486mV±7mV
TEST	PB OUT
ADJ.	VR505
INPUT	COMPOSITE 75% Color Bar (Set up 7.5%)
MODE	EE
TAPE	———
M.EQ	Waveform Monitor

1. Adjust VR505 so that the V is 486mV±7mV

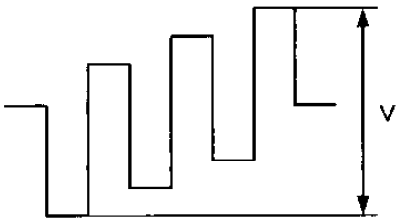

4.9.13. Composite PR Level Adjustment

P.C.B.	V_IN (F6)
SPEC.	V = 486mV±7mV
TEST	PR OUT
ADJ.	VR511
INPUT	COMPOSITE 75% Color Bar (Set up 7.5%)
MODE	EE
TAPE	———
M.EQ	Waveform Monitor

1. Adjust VR511 so that the V is 486mV±7mV

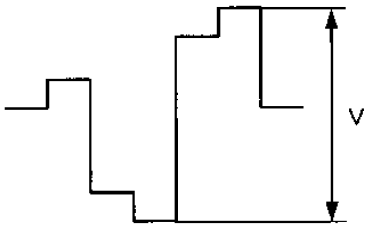

4.9.14. Composite YC Timing Adjustment

P.C.B.	V_IN (F6)
SPEC.	T = 0±10nsec
TEST	Y PR PB OUT
ADJ.	VR510 (PB), VR507 (PR)
INPUT	Composite IN : 12.5T Pulse & Bar
MODE	EE
TAPE	———
M.EQ	Waveform Monitor

1. Confirm that the 12.5T Pulse & Bar signal appeared correctly on the scope with Component Y OUT as shown in figure.

2. Confirm that the 12.5T Pulse portion appeared correctly on the scope with Component PB and PR OUT as shown in figure.

3. **Set WFM monitor to DIFF mode. In case of set the DIFF mode, waveform of Y, PB and PR signals are integrated as shown in figure.**
4. **Expand the 12.5 pulse portion (an ellipse dotted portion as indicated as figure) and set the cursor to 0 cross point as shown in figure.**
5. **Sine-wave is appeared on the scope by expansion as shown in figure.**
6. **Adjust VR510 (PB) and VR507 (PR) so that the phase synchronized between Y and PB, PR signals.**

NOTE:

Please use type of WFM Monitor attached DIFF mode

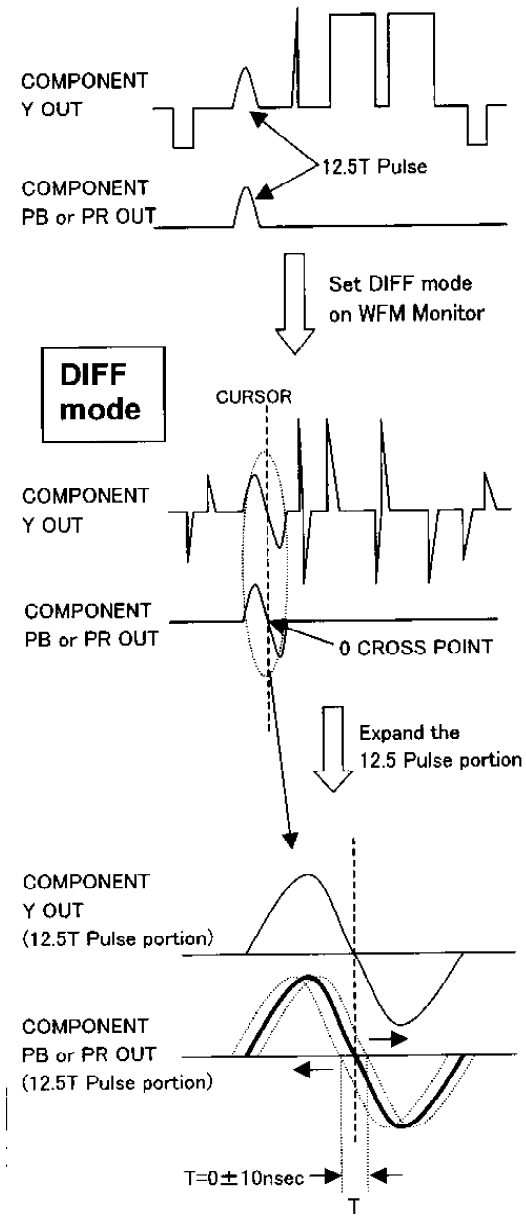

4.9.15. Composite SCH Detection Adjustment

P.C.B.	**V_IN (F6)**
SPEC.	**T = 70±10nsec**
TEST	**CF OUT (TEST SIG GEN) Connector P2-8C (INCOME CF0 pulse) Pin 3 of IC508**
ADJ.	**VR502**
INPUT	**COMPOSITE 75% Color Bar (Set up 7.5%)**
MODE	**EE**
TAPE	**———**
M.EQ	**Oscilloscope**

1. Set VR502 fully CCW.
2. If Income CF0 pulse does not negative pulse, slowly turn VR502 CW and set the position where the Income CF0 pulse just changes from the positive to negative phase as shown in below figure.
3. Set the VR502 so that the phase of Income CF0 pulse just changes from the negative to positive position as shown in below figure.
4. Slowly turn VR502 CW so that the rising edge A delayed 70usec± 10nsec as shown in below figure.

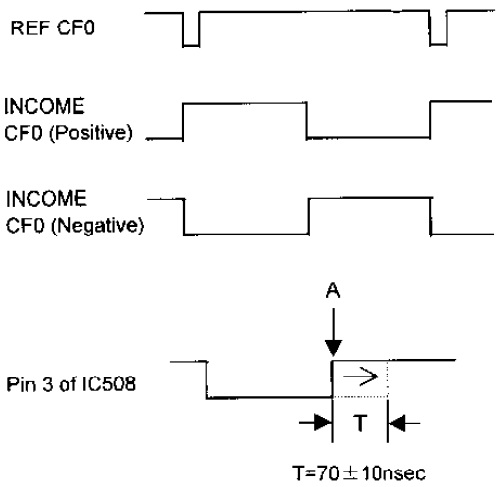

4.9.16. Composite Vector Adjustment

P.C.B.	V_IN (F6)
SPEC.	All vector dots are In Inner Boxes
TEST	COMPOSITE OUT
ADJ.	VR512
INPUT	COMPOSITE 75% Color Bar (Set up 7.5%)
MODE	EE
TAPE	———
M.EQ	Vector Scope

1. Adjust VR512 so that the all vector dots are in the inner boxes.

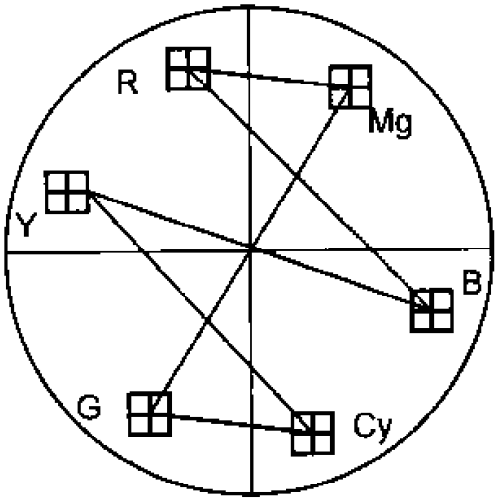

4.10. V IN P. C. Board [FOR PAL ONLY]

4.10.1. Preparation for Video In Adjustment

1. Connect the equipment as shown in the figure.
2. V IN P.C.Board adjustment should be performed after the V OUT P.C.Board adjustment.

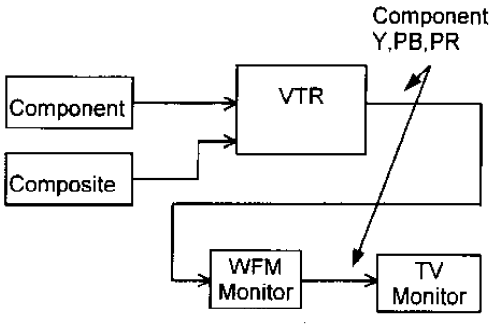

4.10.2. 13.5MHz VCO Adjustment

P.C.B.	V_IN (F6)
SPEC.	0V± 0.1V
TEST	TP553, GND:TG6
ADJ.	VL551, VR552
INPUT	Component 100% Colour Bar
MODE	EE
TAPE	———
M.EQ	Oscilloscope

1. Set VR552 to the center.
2. Adjust VL551 so that the DC Voltage is 0V± 0.1V.

4.10.3. Component Y Timing Adjustment

P.C.B.	V_IN (F6)
SPEC.	V =±0.5 degree
TEST	VIDEO OUT 1
ADJ.	VR551
INPUT	Composite 100% Colour Bar
MODE	EE
TAPE	———
M.EQ	Vector Scope

1. Connect the vector scope to composite out terminal.
2. Expand the Vector Alignment Locus, where the blue point position on vector scale (X point as shown in below figure) and set the Vector Alignment Locus on the u-pivot by adjust gain and phase VR on the vector scope.
3. Expand the Vector Alignment Locus 10% as compare with 100% as shown in below figure.
4. Adjust VR551 so that the vector adjustment locus is become straight, it should be in specification.

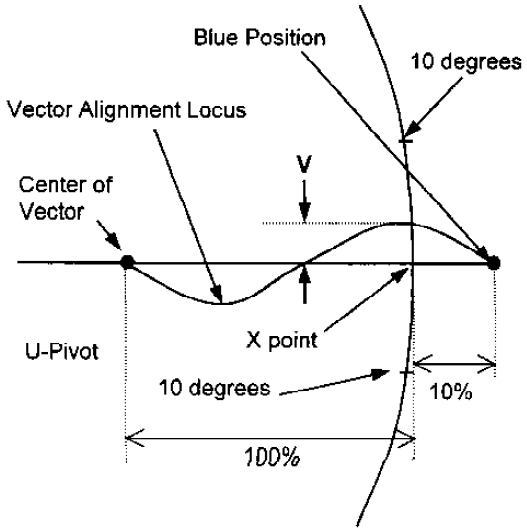

NOTE:

In case of use VM700A.

1. Set the blue point position to tip of U-Pivot.
2. Set the Average is ON of VM700A
3. Adjust VR551 so that the vector adjustment locus is match to X

point, and it should be in specification.

4.10.4. Component Y Level Adjustment

P.C.B.	V_IN (F6)
SPEC.	V1 = 0V±7mV, V2 = 700mV±7mV
TEST	Y OUT
ADJ.	VR652, VR651
INPUT	Component 100% Colour Bar
MODE	EE
TAPE	———
M.EQ	Waveform Monitor

1. Adjust VR652 so that the V1 is 0V±7mV.

2. Adjust VR651 so that the V2 is 700mV±7mV.

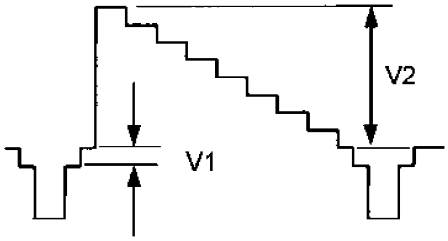

4.10.5. Component PB Level Adjustment

P.C.B.	V_IN (F6)
SPEC.	V1 = 0V±7mV, V2 = 700mV±7mV
TEST	PB OUT
ADJ.	VR703, VR702
INPUT	Component 100% Colour Bar
MODE	EE
TAPE	———
M.EQ	Waveform Monitor

1. Adjust VR703 so that the V1 is 0±7mV.

2. Adjust VR702 so that the V2 is 700m±7mV.

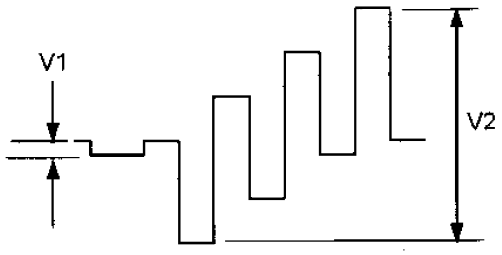

4.10.6. Component PR Level Adjustment

P.C.B.	V_IN (F6)
SPEC.	V1 = 0V±7mV, V2 = 700mV±7mV
TEST	PR OUT
ADJ.	VR753, VR752
INPUT	Component 100% Colour Bar
MODE	EE
TAPE	———
M.EQ	Waveform Monitor

1. Adjust VR753 so that the V1 is 0V±7mV.

2. Adjust VR752 so that the V2 is 700mV±7mV.

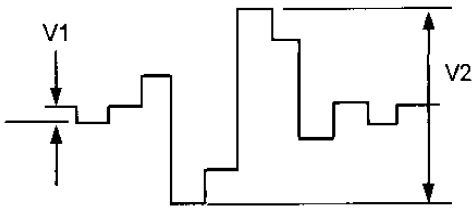

4.10.7. Component Y/C Timing Adjustment

P.C.B.	V_IN (F6)
SPEC.	0±10nsec
TEST	Y, PB, PR OUT
ADJ.	VR701 (PB), VR751 (PR)
INPUT	Component IN : BOWTIE
MODE	EE
TAPE	———
M.EQ	Waveform Monitor

1. Adjust VR701 so that the minimum level of the Y/PB timing signal is 0±10nsec against the center scale.
Adjust VR751 so that the minimum level of the Y/PB timing signal

is 0±10nsec against the center scale.

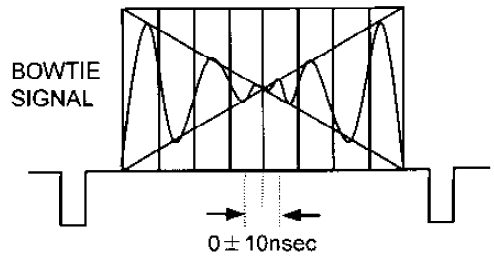

4.10.8. Composite Input Level Adjustment

P.C.B.	V_IN (F6)
SPEC.	V1 = 1.6V±0.02V
TEST	TP651, TP301, GND:TG6
ADJ.	VR301, VR251
INPUT	COMPOSITE 100% Colour Bar
MODE	EE
TAPE	———
M.EQ	Oscilloscope

1. **Observe TP651 and adjust VR301 at the point where the sync tip just begin to saturate.**
2. **Adjust VR251 so that the voltage at TP301 is 1.6V±0.02V.**

NOTE:

Oscilloscope trigger should be connect to Connector P2-16a

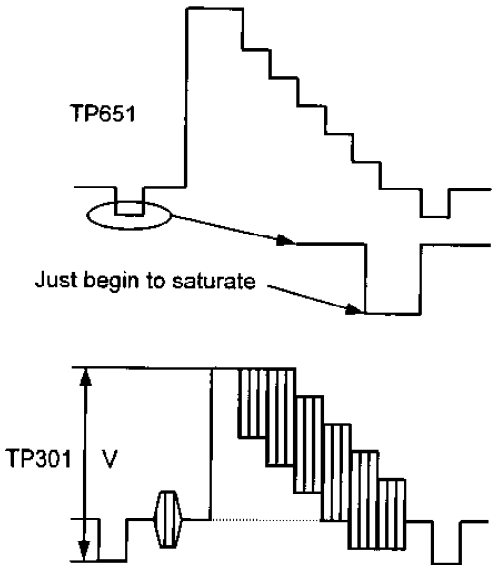

4.10.9. Composite Y Level Adjustment

P.C.B.	V_IN (F6)
SPEC.	V = 700mV±7mV
TEST	Y OUT
ADJ.	VR352
INPUT	COMPOSITE 100% Colour Bar
MODE	EE
TAPE	———
M.EQ	Waveform Monitor

1. Adjust VR352 so that the V is 700mV±7mV.

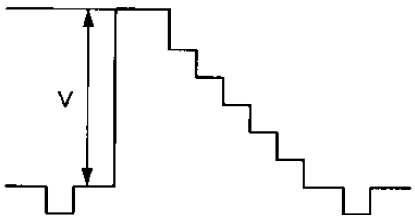

4.10.10. Composite Chroma Level Adj.

P.C.B.	V_IN (F6)
SPEC.	V = 500mV±20mV
TEST	TP451, GND:TG6
ADJ.	VR351
INPUT	COMPOSITE 100% Colour Bar
MODE	EE
TAPE	———
M.EQ	Waveform Monitor

1. Adjust VR351 so that the V is 500mV±20mV.

NOTE:

Oscilloscope trigger should be connect to Connector P2-16a.

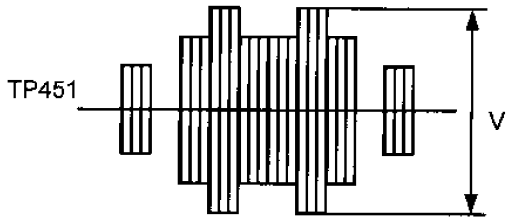

4.10.11. Composite Colour Demodulation Adjustment

P.C.B.	V_IN (F6)
SPEC.	See figure
TEST	TP401, GND:TG6
ADJ.	VR408, VR409
INPUT	COMPOSITE 100% Colour Bar
MODE	EE
TAPE	———
M.EQ	Oscilloscope

1. Adjust VR409 so that the waveform is as shown in figure (no double image).
2. Adjust VR408 so that the noise portion is positioned on the top of A portion as shown in figure.

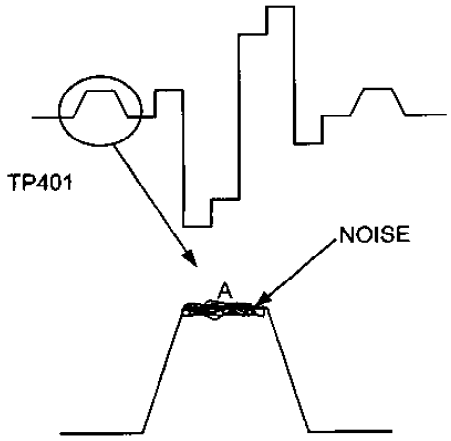

4.10.12. Composite PB Level Adjustment

P.C.B.	V_IN (F6)
SPEC.	V = 700mV±7mV
TEST	PB OUT
ADJ.	VR460
INPUT	COMPOSITE 100% Colour Bar
MODE	EE
TAPE	———
M.EQ	Waveform Monitor

1. Adjust VR460 so that the V is 700mV±7mV

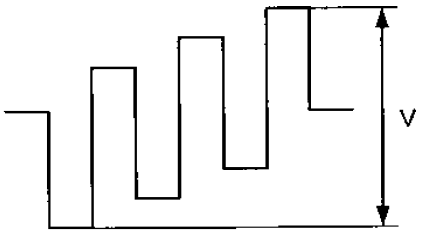

4.10.13. Composite PR Level Adjustment

P.C.B.	V_IN (F6)
SPEC.	V = 700mV±7mV
TEST	PR OUT
ADJ.	VR464
INPUT	COMPOSITE 100% Colour Bar
MODE	EE
TAPE	———
M.EQ	Waveform Monitor

1. Adjust VR464 so that the V is 700mV±7mV

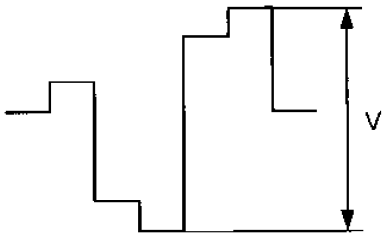

4.10.14. Composite YC Timing Adjustment

P.C.B.	V_IN (F6)
SPEC.	T = 0±10nsec
TEST	Y PR PB OUT
ADJ.	VR459 (PB), VR463 (PR)
INPUT	Composite IN : 12.5T Pulse & Bar
MODE	EE
TAPE	———
M.EQ	Waveform Monitor

1. Confirm that the 12.5T Pulse & Bar signal appeared correctly on the scope with Component Y OUT as shown in figure.

2. Confirm that the 12.5T Pulse portion appeared correctly on the scope with Component PB and PR OUT as shown in figure.

3. **Set WFM monitor to DIFF mode. In case of set the DIFF mode, waveform of Y, PB and PR signals are integrated as shown in figure.**
4. **Expand the 12.5 pulse portion (an ellipse dotted portion as indicated as figure) and set the cursor to 0 cross point as shown in figure.**
5. **Sine-wave is appeared on the scope by expansion as shown in figure.**
6. **Adjust VR459 (PB) and VR463 (PR) so that the phase synchronized between Y and PB, PR signals.**

NOTE:

Please use type of WFM Monitor attached DIFF mode

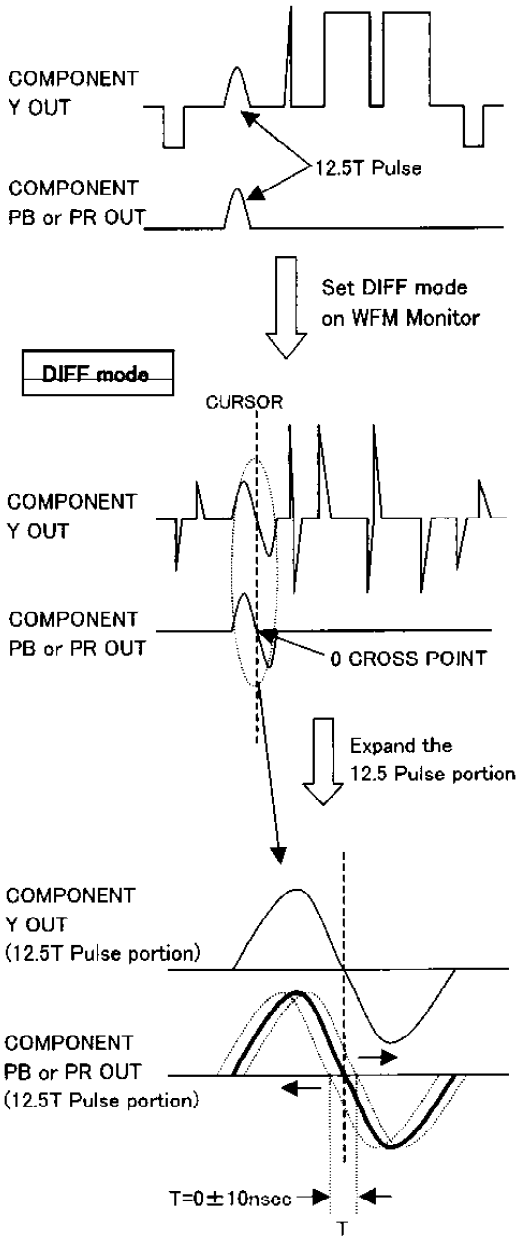

4.10.15. Composite SCH Detection Adjustment

P.C.B.	V_IN (F6)
SPEC.	T1 = T2 :±0.5msec
TEST	CF OUT (TEST SIG GEN) Connector P2-8C (INCOME CF0 pulse) TP403, TP405
ADJ.	VR407
INPUT	COMPOSITE 100% Colour Bar
MODE	EE
TAPE	———
M.EQ	Oscilloscope

1. Set VR407 fully CCW.
2. If Income CF0 pulse does not negative pulse, slowly turn VR407 CW and set the position where the Income CF0 pulse just changes from the positive to negative phase as shown in below figure.
3. Set the VR407 so that the phase of Income CF0 pulse just changes from the negative to positive position as shown in below figure.
4. Slowly turn VR407 CW so that T1 and T2 portion in specification.

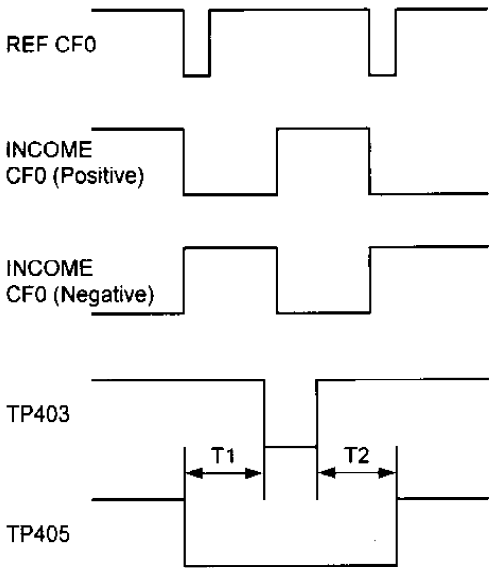

4.10.16. Composite Vector Adjustment

P.C.B.	V_IN (F6)
SPEC.	All vector dots are in Inner Boxes
TEST	COMPOSITE OUT
ADJ.	VR409
INPUT	COMPOSITE 100% Colour Bar
MODE	EE
TAPE	———
M.EQ	Vector Scope

1. Adjust VR409 so that the all vector dots are in the inner boxes.

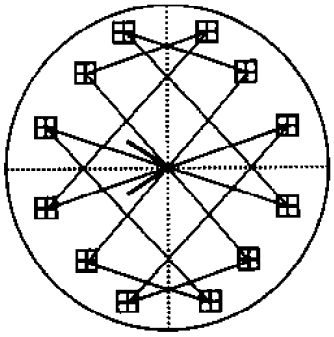

4.11. AUDIO ADDA

4.11.1. Initial Setting of Audio Adjustment

< Switch Setting >

1. Set the audio impedance switches as shown below.

SW1	HIGH
SW41	HIGH

< Measurement Equipment Setting >

1. In case of use Audio Precision, please set switches as shown below.

GENERATOR

OUTPUT	A & B	BAL
	50 ohm	FLOAT

ANALYZER

CHANNEL-A	INPUT	100 kΩ
CHANNEL-B	INPUT	100 kΩ

< Service Menu Setting >

1. Set the DIP SW 1-1 to ON at the reverse side of the front panel.

2. Open the Audio Adjust menu on the Service Menu.

3. Set the items as shown below.

E01	METER REF.	Fs - 20
E05	REF. LEVEL2	0 dB
E07	MIC IN LV	ENA

4. Set the DIP SW 1-1 to OFF.

< User Menu Setting >

1. Open the AUDIO item (No. 700 series) of the SETUP-MENU and set the items as shown below.

700	CH1 IN LV	0 dB
701	CH2 IN LV	0 dB
703	CH1 OUT LV	0 dB
704	CH2 OUT LV	0 dB
706	MONI L OUT LV	0 dB
707	MONI R OUT LV	0 dB
708	MONI OUT	VAR
709	EMPHASIS	OFF
714	REC CH1	CH1
715	REC CH2	CH2
722	INT SG	OFF

4.11.2. Output Balance Adjustment

P.C.B.	A ADDA (F8)
SPEC.	Minimum
TEST	AUDIO OUT : CH1, CH2 MONIOUT : LCH, RCH
ADJ.	VR402 (CH1), VR477 (CH2) VR751 (LCH), VR831 (RCH)
INPUT	INT Signal
MODE	EE
TAPE	———
M.EQ	Oscilloscope, Monitor TV

1. Set the items on SET UP menu as shown below.

708	MONI OUT	UNITY
722	INT SG	ON

2. Connect to the oscilloscope as shown below.

Oscilloscope	Output (VTR)
CH1	HOT (AUDIO OUT, MONI OUT)
CH2	COLD (AUDIO OUT, MONI OUT)

3. Set the oscilloscope's mode to ADD, and adjust VR402 so that the CH1 waveform level is minimum.
4. Repeat above adjustment in the same way about the other channels.

4.11.3. Output Level Adjustment

P.C.B.	A ADDA (F8)
SPEC.	0dBu (0.2dBu
TEST	AUDIO OUT : CH1, CH2 MONIOUT : LCH, RCH
ADJ.	VR401 (CH1), VR476 (CH2) VR702 (LCH), VR701 (RCH)
INPUT	INT Signal
MODE	EE
TAPE	———
M.EQ	Oscilloscope, Audio Analyzer VTVM (Audio Precision)

1. Set the AUDIO item as shown below.

708	MONI OUT	UNITY
722	INT SG	ON

2. Adjust VR401 so that the CH1 level is in the specification.
3. Repeat above adjustment in the same way about the other channels.
4. Confirm all channels that the sine-wave output is normal.

4.11.4. Input CMRR Adjustment

P.C.B.	A ADDA (F8)
SPEC.	Less than -60dBu
TEST	TP201 (CH1), TP202 (CH2)
ADJ.	VR1 (CH1), VR41 (CH2)
INPUT	LINE IN (CH1, CH2) 1kHz, 0dBu Sine-wave (CMTST)
MODE	EE
TAPE	———
M.EQ	Oscilloscope, VTVM (Audio Precision), Monitor TV

1. Connect the oscilloscope to TP201.
2. Input the sine-wave signal to HOT and COLD terminal of CH1.
3. Adjust VR1 so that the CH1 output level is minimum and in the specification.
4. Repeat adjustment in the same way about CH2.

NOTE:

In case of use Audio Precision, Change the GENERATOR OUTPUT mode to CMTS from BAL.. And after adjustment, return to BAL.

4.11.5. Input Level Adjustment

P.C.B.	A ADDA (F8)
SPEC.	0dBu (0.2dBu
TEST	AUDIO OUT (CH1, CH2)
ADJ.	VR2 (CH1), VR42 (CH2)
INPUT	ALINE IN (CH1,CH2) 1kHz 0dBu Sine-wave (BAL)
MODE	EE
TAPE	———
M.EQ	Oscilloscope, VTVM (Audio Precision), Monitor TV

1. Adjust VR2 so that the CH1 level is in the specification.
2. Repeat adjustment in the same way about CH2.

4.12. CUE

4.12.1. Initial Setting of CUE Adjustment

1. Set the CUE REC VR and CUE PB VR to UNITY on Front Panel.
2. Set the switches indicated as below.

Ref No.	Name of SW	Position
SW4101	CUE IN Impedance	HIGH
SW4002	NR Select	HIGH
SW4001	REC EQ	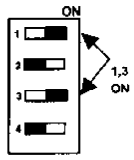

Condition of Input and Output

OSC Output Impedance	**Less than 50 ohm (Balance Out)**
Input Impedance	**More than 100Kohm (Balance In)**

4.12.2. CTL Erase Frequency Adj.

P.C.B.	**CUE (H2)**
SPEC.	**70kHz±0.2kHz**
TEST	**TP4202, TG201 (GND)**
ADJ.	**T4201**
INPUT	**———**
MODE	**REC**
TAPE	**Blank Tape**
M.EQ	**Frequency Counter**

1. Adjust T4201 so that the frequency level is in the specification.

4.12.3. CTL Erase/CUE Erase Current Adjustment

P.C.B.	**CUE (H2)**
SPEC.	**A = more than 240mVp-p**
TEST	**TP4203 (CTL), TP4202 (CUE)** **TG4201 (GND)**
ADJ.	**T4204 (CTL), T4203 (CUE)**
INPUT	**———**
MODE	**REC**
TAPE	**Blank Tape**
M.EQ	**Oscilloscope**

1. Adjust T4204 so that the voltage at TP4203 is in the specification.

2. Adjust T4203 so that the voltage at TP4202 is in the specification.

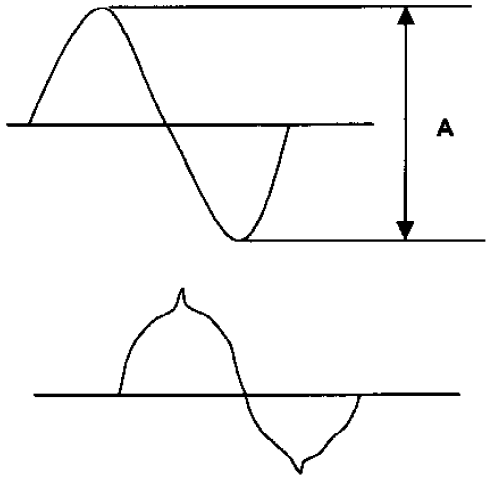

Bottom Picture shows bad waveform style.

4.12.4. CUE Bias Current Adjustment

P.C.B.	CUE (H2)
SPEC.	7 mVrms ± 0.5 mVrms (19.7mVp-p ± 1.5mVp-p)
TEST	TP4002 (GND: TP4003)
ADJ.	T4202, VR4202
INPUT	———
MODE	REC
TAPE	Blank Tape
M.EQ	Vacuum Tube Volt Meter

1. Connect the Vacuum Tube Volt Meter between TP4002 and TP4003 (GND) and confirm the voltage is in the specification.
2. If it is out of specification, adjust T4202 so that the level becomes maximum and adjust VR4202 so that the level is in the specification.

4.12.5. CUE PB Level Adjustment

P.C.B.	CUE (H2)
SPEC.	0dBu ± 0.5dBu
TEST	CUE OUT (XLR Connector)
ADJ.	VR4002
INPUT	———
MODE	PLAY
TAPE	NTSC: VFM3580KM (0 to 14 min) PAL: VFM3680KM (0 to 10 min)
M.EQ	Audio Analyzer

1. Playback CUE Level master part of the alignment tape and adjust VR4002 so that the CUE OUT level is in the specification.

4.12.6. CUE Noise Cancel Adjustment

P.C.B.	CUE (H2)
SPEC.	Less than -40dBu
TEST	CUE OUT
ADJ.	VR4003, VR4006
INPUT	———
MODE	PLAY
TAPE	Blank Tape (NO Recorded portion)
M.EQ	Audio Analyzer

1. Connect the Audio Analyzer to CUE OUT with 1/3 OCT BPF (600Hz) and the noise level is in the specification.
2. If it is not adjust VR4003 and then adjust VR4006 so that the noise level is in the specification.
3. If it is not, repeat item 2.

NOTE:

In case of use Audio Precision, set indicated as below.
MEASURE: BANDPASS
BP/BR FREQ: 600Hz
FILTER: OFF

4.12.7. CUE REC/PB Level Adjustment

P.C.B.	CUE (H2)
SPEC.	0 dBu ± 1 dBu
TEST	CUE OUT (XLR Connector)
ADJ.	VR4001
INPUT	1KHz, 0 dBu Sine-wave (BAL)
MODE	REC
TAPE	Blank Tape
M.EQ	Audio Analyzer

1. Supply a 1KHz, 0dBu signal into the CUE Input and record the input signal for a few minutes.
2. Playback the just recorded portion.
3. Adjust VR4001 so that the CUE OUT level is in the specification.

NOTE:

In case of use Audio Precision, set indicated as below.
MEASURE: AMPLITUDE
BP/BR FREQ: AUTO
FILTER: OFF
BANDWIDTH: 22Hz, 22KHz

5. Exploded Views & Parts List

5.1. SERVICING FIXTURES & TOOLS

SERVICING FIXTURES & TOOLS

Ref. No.	Part No.	Part Name & Description	Pcs	Remark
1	VFK1145	BACK TENSION METER	1	
2	VFK1149	POST DRIVER	1	
3	VFK71	DIAL TORQUE GAUGE (150 G)	1	
4	VFK1191	DIAL TORQUE GAUGE (45G)	1	
5	VFK1152	DIAL TORQUE GAUGE ADAPTOR	1	
6	VFK0357	ECCENTRIC SCREWDRIVER	1	
7	VFK1154	POST HEIGHT FIXTURE	1	
8	VFK1153	MECH. NEUTRAL PLATE	1	
9	VFK0906	OIL	1	
10	VFK1155	REV POSITION TOOL	1	
11	VFK1156	PLAY POSITION TOOL	1	
12	VFK1208	NEUTRAL POSITION TOOL	1	
13	VFK1150	NUT DRIVER (5.5MM)	1	
14	VFK1151	NUT DRIVER (2.5MM)	1	
15	VFK1188	DIAL TENSION GAUGE (30G)	1	
16	VFK0948A	CHECK LIGHT	1	
17	VFK0749	FROIRAL GREASE	1	
18	M0R265	MORLYTONE GREASE	1	
19	VFK1146	PHILIPS DRIVER (FINE)	1	
20	VFK1147	PHILIPS DRIVER (FINE)	1	

Ref. No.	Part No.	Part Name & Description	Pcs	Remark
21	VFK1148	HEX. DRIVER (1.5)	1	
22	VFK1178	HEX. DRIVER (0.89)	1	
23	VFK1179	HEX. DRIVER (0.71)	1	
24	VFK1190	HEX. WRENCH	1	
25	VFK1209	TORQUE DRIVER	1	
26	VFK1375	POST AXIS DRIVER (1.5MM)	1	
27	VFK1300	A/D BOARD	1	
28	VFM3580KM	ALIGNMENT TAPE (NO.1)	1	FOR NTSC
29	VFM3581KM	ALIGNMENT TAPE (NO.2)	1	FOR NTSC
30	VFM3582KM	ALIGNMENT TAPE (NO.3)	1	FOR NTSC
31	VFM3680KM	ALIGNMENT TAPE (NO.1)	1	FOR PAL
32	VFM3681KM	ALIGNMENT TAPE (NO.2)	1	FOR PAL
33	VFM3682KM	ALIGNMENT TAPE (NO.3)	1	FOR PAL
34	VFM3000EDS	ALIGNMENT TAPE (DV LISTA)	1	
35	VFM3010EDS	ALIGNMENT TAPE	1	FOR NTSC
36	VFM3110EDS	ALIGNMENT TAPE	1	FOR PAL
37	AJ-CL12MP	CLEANING TAPE	1	
38	VFK1481	LISTA SOFTWARE	1	
39	VFK1186	LISTA CABLE	1	
40	VFK1423	TAPE DET. SENSOR CASSETTE	1	
41	VZZ0095	CLEANING CROSS	1	
42	VFK1248A	FLASH ROM VERSION UP SOFT	1	
43	VFK1304A	ROM REWRITER	1	
44	VFK1305	120P EXTENDER	1	
45	VFK1307	70P EXTENDER	1	
46	VFK1306	52P EXTENDER	1	
47	VFK0369	TWEEZERS	1	
47	VFK0371	RADIO PRIER	1	
48	VFK0372	CUTTER PRIER	1	
49	VFK0338	TRIMMER ADJUSTMENT DRIVER	1	
50	VFK0337	PHILIPS DRIVER	1	

5.2. Mechanical Chassis Assembly (1)

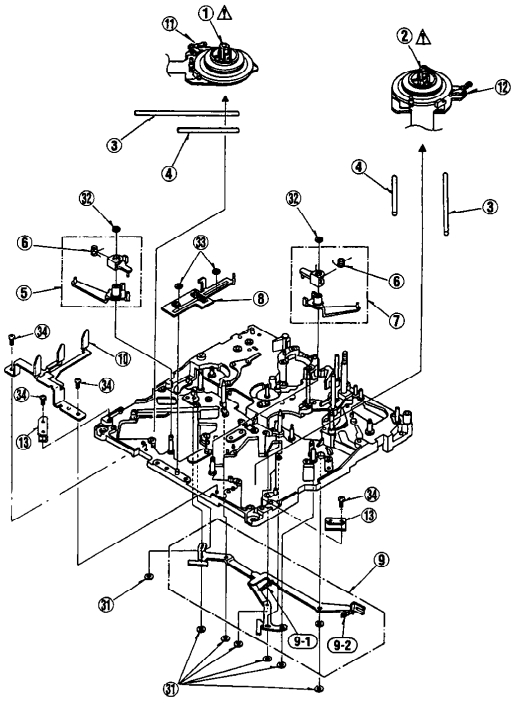

Mechanical Chassis Assembly (1)

Ref. No.	Part No.	Part Name & Description	Pcs	Remark
1	VEM0686	S REEL MOTOR A ASS'Y	1	(M)
2	VEM0687	T REEL MOTOR A ASS'Y	1	(M)
3	VMS5923	REEL OUTER RAIL	2	
4	VMS5924	REEL INNER RAIL	2	
5	VXL2589	S BASE DRIVE ARM ASS'Y	1	
6	VMB2944	CHARGE SPRING	2	
7	VXL2590	T BASE DRIVE ARM ASS'Y	1	
8	VXA5625	SLIDE ROD ASS'Y	1	
9	VXL2597	M STOPPER DRIVE ARM ASS'Y	1	
9-1	VMB2955	M STOPPER SPRING (1)	1	
9-2	VMB3017	M STOPPER SPRING (2)	1	
10	VXA6174	L-M RELEASE ANGLE ASS'Y	1	
11	VXZ0439	S BRAKE ARM ASS'Y	1	
12	VXZ0440	T BRAKE ARM ASS'Y	1	
13	VMZ2603	REEL FLEX COVER	2	
31	VMX1061	WASHER	7	
32	VMX1079	CUT WASHER	2	
33	VMX1394	CUT WASHER	2	
34	XQN2+CF3	SCREW	4	

Ref. No.	Part No.	Part Name & Description	Pcs	Remark

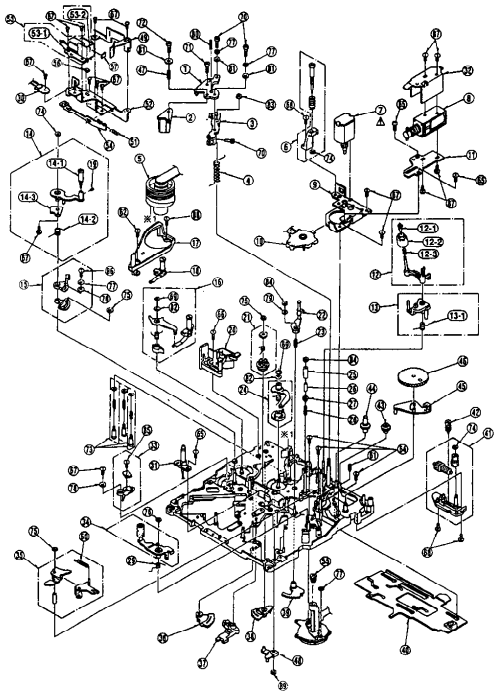

Mechanical Chassis Assembly (2)

Ref. No.	Part No.	Part Name & Description	Pcs	Remark
1	VXA5554	A/C HEAD BASE (1) ASS'Y	1	
2	VED0419	A/C HEAD	1	(M)
3	VXA6067	A/C HEAD BASE (2) ASS'Y	1	
4	VMB2935	A/C HEAD HIGHT SPRING	1	
5	VEG1498	CYLINDER UNIT	1	(M)
6	VXA5715	EMARGENCY SHIFT HOLDER	1	
7	VEM0645	LOADING MOTOR (1)A ASS'Y	1	(M)
8	VSJ0227	PINCH SOLENOID	1	(M)
9	VXA5584	MOTOR ANGLE ASS'Y	1	
10	VES0814	MODE SW ASS'Y	1	(M)
11	VMA9376	PINCH SOLENOID BASE	1	
12	VXL2748	CLEANING ARM A ASS'Y	1	(M)
12-1	VMX2150	CLEANER ROLLER HOLDER	1	
12-2	VXP1808	CLEANER ROLLER ASS'Y	1	
12-3	VMB3114	CLEANER ROLLER SPRING	1	
13	VXL2870	T2 ARM ASS'Y	1	
13-1	VMB3304	T2 ARM SPRING	1	
14	VXL2831	TENSION ARM A ASS'Y	1	(M)
14-1	VXP1761	TENSION ROLLER	1	
14-2	VMB3220	TENSION LEG SPRING	1	
14-3	VXA6173	MAGNET HOLDER ASS'Y	1	
15	VXA5791	TENSION LEG SPRING HOOK	1	
16	VXL2709	S1 LOADING ARM ASS'Y	1	(M)
17	VMD2533	LOADING RAIL	1	
18	VXA6378	T1 BOAT ASS'Y	1	(M)
19	VHD0561	HEX SCREW	1	
20	VXA6052	S POST BASE AU.	1	(M)
21	VXP1683	T4 CONNECTION GEAR ASS'Y	1	
22	VXL2772	T4 ARM ASS'Y	1	

Ref. No.	Part No.	Part Name & Description	Pcs	Remark
23	VMB2950	T4 THRUST SPRING	1	
24	VXL2898	T LOADING ARM N ASS'Y	1	
25	VMS5906	T3 UPPER FRANGE	1	
26	VMS5905	T3 SLEEVE	1	
27	VMS5904	T3 LOWER FRANGE	1	
28	VMB2929	T3 SPRING	1	
29	VMB2933	PINCH RELEASE SPRING	1	
30	VEK7927	INSULLATION SENSOR	1	
31	VEK7691	LED HOLDER P.C.BOARD	1	
32	VMA9411	PINCH SOLENOID ANGLE	1	
33	VXA5820	TENSION SENSOR ASS'Y	1	
34	VXL2835	PINCH ARM ASS'Y	1	(M)
35	VXL2588	PINCH GUIDE ARM ASS'Y	1	
36	VXA5570	T SECTOR GEAR ASS'Y	1	
37	VXL2838	TENSION LEG. GUIDE ARM	1	
38	VXA5567	S SECTOR GEAR ASS'Y	1	
39	VXA5564	T4 SECTOR GEAR ASS'Y	1	
40	VXA5563	MAIN ROD ASS'Y	1	
41	VXA5627	THRUST SHAFT HOLDER ASS'Y	1	
42	VDG1166	MOTOR WARM GEAR	1	
43	VDG1268	MOTOR EMARGENCY GEAR A(A)	1	
44	VDG1267	MOTOR EMARGENCY GEAR B(A)	1	
45	VXL2889	MAIN CAM ARM ASS'Y	1	
46	VDG1168	MAIN CAM GEAR	1	(M)
47	VMB2937	A/C HEAD ADJUST SPRING	1	
48	VXL2600	EJECT ARM ASS'Y	1	
49	VMD3475	T1 GUIDE ASS'Y	1	
50	VMB2934	SPRING	1	
51	VMB3051	CLEANER RETURN SPRING	1	
52	VXA6077	CLEANER BASE 1 ASS'Y	1	
53	VXA6078	CLEANER SOLENOID ASS'Y	1	
53-1	VSJ0226	CLEANER SOLENOID	1	(M)
53-2	VMA9877	CLEANER SOLENOID BASE	1	
54	VMM0429	CLEANER INTERLOCK	1	
55	VXQ0556	THRUST SCREW ASS'Y	1	(M)
56	VMT0871	SILENCER A	1	
57	VMT0872	SILENCER B	1	
61	VHD0356	SCREW	1	
62	XQN2+A3	SCREW	1	
64	XQN2+A35FZ	SCREW	3	
65	XQN2+AM2	SCREW	3	
66	XQN2+AM4	SCREW	1	
67	XQN2+CF3	SCREW	12	
68	XQN2+CF4	SCREW	3	
69	XUC12FP	E-RING	2	
70	XVE2B4FZ	HEX SCREW	3	
71	XVE2B6FP	HEX SCREW	1	
72	XVE2B12FP	HEX SCREW	1	
73	VXQ0439	SCREW	3	

Ref. No.	Part No.	Part Name & Description	Pcs	Remark
74	VMX0967	CUT WASHER	3	
75	VMX1061	WASHER	3	
76	VMX1079	CUT WASHER	1	
77	XWA2B	WASHER	4	
78	XWE2	WASHER	2	
79	XWE16VW	WASHER	1	
80	XXE2A6FP	HEX SCREW	1	
81	XWG2	WASHER	3	
82	XWGV15Z32G	WASHER	2	
83	VHD0045	NYLON NUT	1	
84	VHN0312	NUT	2	
85	XQN2+AQ3.5FZ	SCREW	1	
86	XQN2+AJ5	SCREW	1	
87	XQN2+A1.5	SCREW	4	
88	XQN2+A4	SCREW	1	
89	VMX1394	CUT WASHER	1	
*	VXY1431Z1	MECHANISM	1	(M)

Ref. No.	Part No.	Part Name & Description	Pcs	Remark

5.4. Sub Chassis Assembly

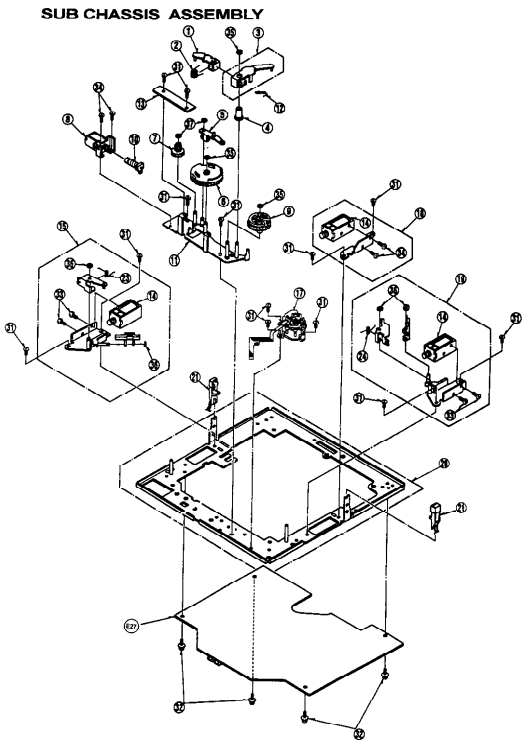

Sub Chassis Assembly

Ref. No.	Part No.	Part Name & Description	Pcs	Remark
1	VXL2656	MIC DRIVE ARM (A) ASS'Y	1	
2	VMB3018	MIC DRIVE SPRING	1	
3	VXL2657	MIC DRIVE ARM (B) ASS'Y	1	
4	VDB1429	MIC DRIVE ARM BOSS	1	
5	VXL2613	REEL DRIVE ARM ASS'Y	1	
6	VDG1192	REEL DRIVE CAM GEAR	1	
7	VDG1193	REEL DRIVE WORM WHEEL	1	
8	VEM0585	REEL DRIVE MOTOR ASS'Y	1	(M)
9	VDG1211	MIC GENEVA GEAR	1	
10	VXP1698	REEL DRIVE WORM ASS'Y	1	
11	VXA5628	MOTOR BASE ASS'Y	1	
12	VMB3019	MIC DRIVE RETURN SPRING	1	
13	VEK7726	REEL SENSOR P.C.BOARD	1	
14	VSJ0216	BRAKE SOLENOID	3	(M)
15	VXA5575	S-BRAKE SOLENOID BASE	1	
17	VXA6199	DISTINCTION SW ASS'Y	1	(M)
18	VXA5579	M STOPPER SOLENOID ASS'Y	1	
19	VXA5887	T-BRAKE SOLENOID BASE ASS	1	
20	VXK1336	SUB CHASSIS	1	
21	VEK7692	SENSOR HOLDER ASS'Y	1	
22	VMS6193	T BRAKE RELEASE ARM SHAFT	1	
23	VMB2957	S BRAKE SPRING	1	
24	VMB2987	T BRAKE SPRING	1	
31	XQN2+CF3	SCREW	13	
32	XYN26+K6	SCREW	4	
33	XQN2+A1.5	SCREW	2	
34	XQN2+A2	SCREW	2	
35	VMX1079	CUT WASHER	5	
36	VMX0967	CUT WASHER	4	
37	VMX1548	CUT WASHER	2	
38	XQN2+A1.5	SCREW	4	
E27	VEP82216B	MECH I/F P.C.BOARD	1	

Ref. No.	Part No.	Part Name & Description	Pcs	Remark

5.5. Front Panel Assembly

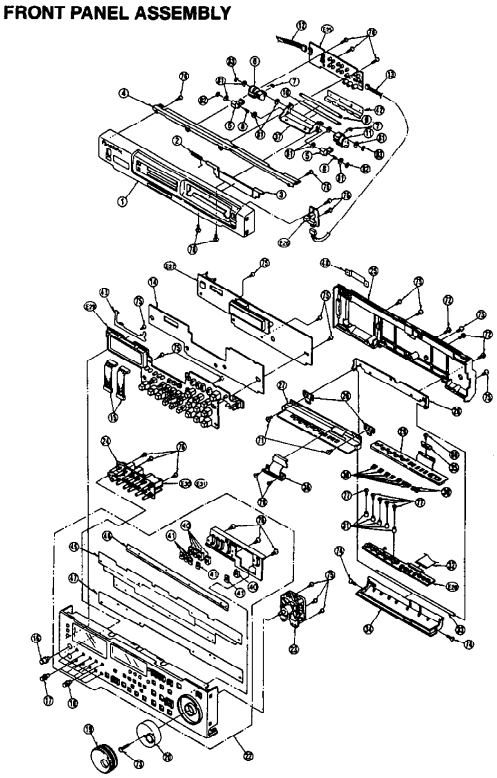

Front Panel Assembly

Ref. No.	Part No.	Part Name & Description	Pcs	Remark
1	VYP6737	UPPER FRONT PANEL 1 ASS'Y	1	FOR AJ-D850P
1	VYP6737	UPPER FRONT PANEL 1 ASS'Y	1	FOR AJ-D850E
2	VMB2923	BLINDER SPRING	1	
3	VKF2785	BLINDER PANEL	1	
4	VMP4864	UPPER FRONT PANEL ANGLE	1	
5	VDK0147	CASSETTE GUIDE CAM	2	
6	VGQ4009	CASSETTE GUIDE (L)	1	
7	VMB2922	CASSETTE GUIDE SPRING	2	
8	VMB2986	CAM SPRING	2	
9	VMS5864	CASSETTE COVER	1	
10	VMS6017	GUIDE CAM SHAFT	1	
11	VGQ4010	CASSETTE GUIDE (R)	1	
12	VEE9649	UP FRONT CONNECTION CABLE 1	1	
13	VEE9650	UP FRONT CONNECTION CABLE 2	1	
14	VMZ2501	INSULATION SHEET	1	
15	VEE9640	FRONT SW CABLE	2	
16	VGU5334	LEVER VR KNOB	1	
17	VXU0768-1	VR KNOB ASS'Y	3	
18	VXU1160	REC VR KNOB ASS'Y	4	
19	VGU5780	SEARCH DIAL COVER	1	
20	VGU8126	SEARCH DIAL KNOB	1	
22	VYP6732	LOWER FRONT PANEL 1 ASS'Y	1	
23	VSP1097	SEARCH DIAL	1	
24	VMP4860	VR ANGLE	1	
25	VKU0513	BACK COVER	1	FOR AJ-D850P
25	VKU0524	BACK COVER	1	FOR AJ-D850E
26	VMB2978	LEAF SPRING	2	
27	VGM1288	SUB CONTROL SUPPORT ANGLE	1	
28	VGM1287	SUB CONTROL ANGLE	1	
29	VGM1269	SUB SW ANGLE	1	FOR AJ-D850P
29	VGM1359	SUB SW ANGLE	1	FOR AJ-D850E
30	VGU7179	SLIDE SW KNOB	10	
32	VWJ28C2120L0	FR CPU SUB FFC	1	
33	VMS6012	SHAFT	1	
34	VKF2497	SUB SW DOOR	1	
35	VMC1241	EARTH PLATE	1	
36	VMP5091	EARTH PLATE SUB	1	
37	VMP4863	CASSETTE GUIDE ANGLE	1	
38	VMC1277	HEAD PHONE EARTH SPRING	1	
39	VMZ2671	SPACER	1	
40	VGU5287	SLIDE KNOB	5	
41	VGF0659	SLIDE KNOB SHEET	5	
42	VMC1319	FRAME EARTH PLATE	1	FOR AJ-D850E
43	VMP5259	FIXING PLATE	1	FOR AJ-D850E
45	VSC4594	PANEL EARTH SHEET	1	FOR AJ-D850E
46	VMP5262	INSTALLTION PANEL A	1	FOR AJ-D850E
47	VMC1317	INSTALLTION PANEL A	1	FOR AJ-D850E
48	VMP5260	FRONT SW CABLE ANGLE	1	FOR AJ-D850E
71	XSB3+6FZ	SCREW	2	
72	XSB3+8FZ	SCREW	3	

Ref. No.	Part No.	Part Name & Description	Pcs	Remark
73	XSN2+8	SCREW	1	
74	XSS26+6FZ	SCREW	2	
75	XTN4+10G	SCREW	13	
76	XTV3+8G	SCREW	16	
77	XQN14+C4	SCREW	5	
78	XTV3+8F	SCREW	2	
79	XSN2+3	SCREW	2	
80	XSN26+3	SCREW	1	
81	VMX2562	WASHER	8	
82	XUC2FP	E-RING	2	
83	XUC25FP	E-RING	2	
84	XSB3+4	SCREW	1	FOR AJ-D850E
85	XSB26+5	SCREW	1	FOR AJ-D850E
86	XTV3+6F	SCREW	2	
E20	VEP80A76A	UP FRONT 1 P.C.BOARD	1	
E21	VEP80852A	UP FRONT 2 P.C.BOARD	1	
E22	VEP86263B	UP FRONT 2 P.C.BOARD	1	
E23	VEP86148A	FRONT CPU SUB P.C.BOARD	1	
E24	VEP80A49B	FRONT SW P.C.BOARD	1	
E25	VEP80963C	FRONT VR 1 P.C.BOARD	1	
E26	VEP80964C	FRONT VR 2 P.C.BOARD	1	

Ref. No.	Part No.	Part Name & Description	Pcs	Remark

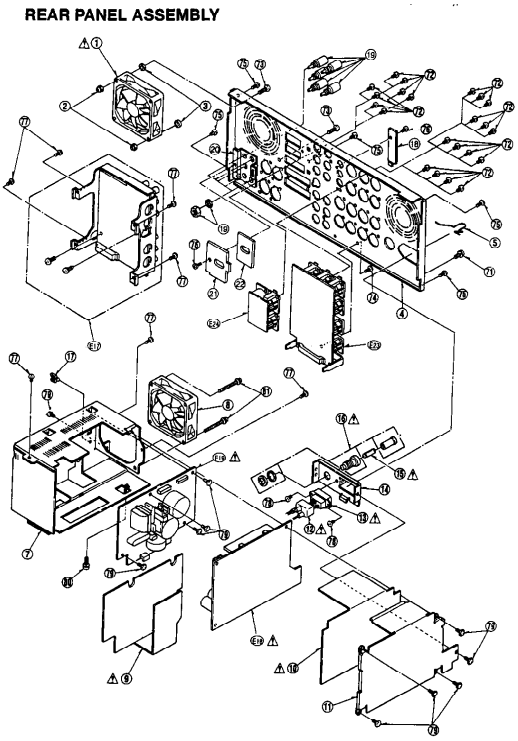

Rear Panel Assembly

Ref. No.	Part No.	Part Name & Description	Pcs	Remark
1	VRF0190	FAN MOTOR	1	
2	VHN0063	NYLON NUT	2	
3	VMX0835	SPACER	2	
4	VJH0939	JACK PANEL	1	FOR AJ-D850P
4	VJH1079	JACK PANEL	1	FOR AJ-D850E
5	VML2903	AC CORD HOOK	1	
7	VSC4387	POWER SUPPLY CASE A	1	
8	VRF0190	FAN MOTOR	1	
9	VMZ2502	SHIELD SHEET A	1	
10	VMZ2503	SHIELD SHEET B	1	
11	VSC4388	POWER SUPPLY CASE B	1	
12	VMZ1252	AC INLET COVER	1	
13	VJP0083	AC INLET	1	
14	VMP4889	AC INLET BRACKET	1	
15	XBA1C50NB5	FUSE	1	FOR AJ-D850P
15	XBA2C40TH15	FUSE	1	FOR AJ-D850E
16	VJF1005	FUSE HOLDER	1	
17	VJF0285	WIRE LOCKING SADDLE	4	
23	VMP5032	OPTION PANEL	1	
24	VEE9648	AES/EBU CABLE	1	
25	VMT0884	GASKET (O)	1	FOR AJ-D850E
26	VEK8447	POWER SUPPLY ASS'Y	1	FOR AJ-D850P
26	VEK8448	POWER SUPPLY ASS'Y	1	FOR AJ-D850E
71	VHD0426	SCREW	1	
72	XSN26+6FZ	SCREW	22	

Ref. No.	Part No.	Part Name & Description	Pcs	Remark
73	XSN4+35FC	SCREW	2	
74	XTN26+6FFZ	SCREW	1	
75	XTV3+6F	SCREW	5	
76	XTV3+6FFZ	SCREW	2	
77	XTV3+6FFR	SCREW	7	
78	XSB3+6FZ	SCREW	2	
79	XTW3+8LR	SCREW	10	
80	XYE4+EF8	SCREW	1	
81	XYNV4+K35FCS	SCREW	2	
E14	VEP83224A	V/S JACK P.C.BOARD	1	
E15	VEP81183A	POWER 1 P.C.BOARD	1	
E16	VEP81184B	POWER 2 P.C.BOARD	1	
E18	VEP84183A	A JACK P.C.BOARD	1	
E19	VEP84187A	AES/EBU P.C.BOARD	1	

5.7. Casing Parts Assembly

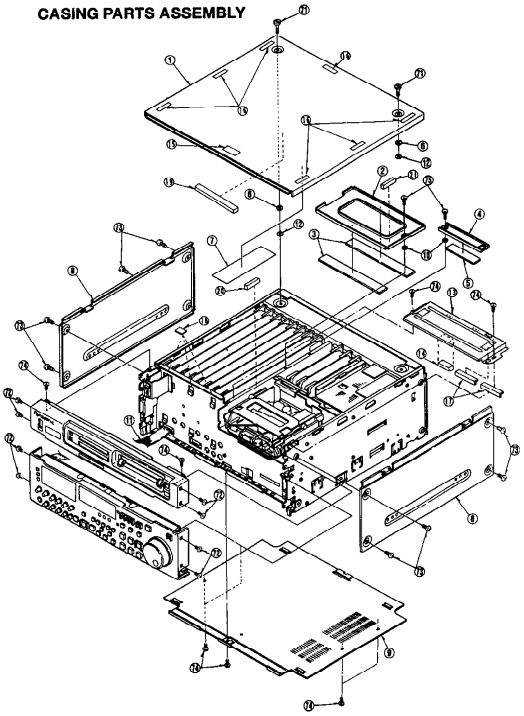

Casing Parts Assembly

Ref. No.	Part No.	Part Name & Description	Pcs	Remark
1	VYP6496	TOP PANEL	1	
2	VMP4884	P.C.BOARD PLATE L	1	
3	VMX2511	P.C.BOARD RUBBER CUSHION L	2	
4	VMP4885	P.C.BOARD PLATE S	1	
5	VMX2512	P.C.BOARD RUBBER CUSHION S	1	
6	VMX2510	SPACER	2	
7	VMZ2325	TOP PANEL BARRIER	1	
8	VGM1567	SIDE PANEL	2	FOR AJ-D850P
8	VGM1271	SIDE PANEL	1	FOR AJ-D850E
9	VKU0514	BOTTOM PLATE	1	
10	VMX1558	NYLON WASHER	2	
11	VEE9641	FRONT CABLE	1	
12	VMX2582	WASHER	2	
13	VMP5265	CARRIAGE SUPPORT	1	
14	VMT0797	GASKET C	1	
15	VMT0509	GASKET (B)	1	FOR AJ-D850E
16	VMT0800	GASKET (C)	1	FOR AJ-D850E
17	VMT0776	GASKET (F)	1	FOR AJ-D850E
18	VMT0797	GASKET C	3	
19	VMT0785	DUST PROOF CUSHION (B)	1	
20	VMT0786	DUST PROOF CUSHION (C)	1	
21	VMT0890	DUST PROOF CUSHION (C)	1	
75	XYN3+K8	SCREW	2	
74	XTV3+6F	SCREW	3	
73	XSB4+8FC	SCREW	8	

Ref. No.	Part No.	Part Name & Description	Pcs	Remark
72	XSB3+8FZ	SCREW	8	
71	VHD0274	SCREW	2	

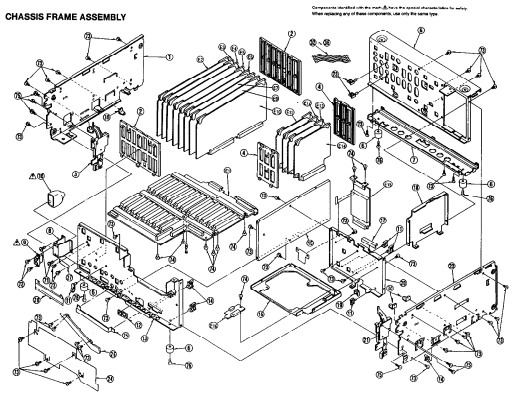

Chassis Frame Assembly

Ref. No.	Part No.	Part Name & Description	Pcs	Remark
1	VMP4871	LEFT SIDE FRAME	1	
2	VGQ4011	P.C.BOARD GUIDE RAIL A	2	
3	VYQ1258	ROTARY BRACKET L	1	
4	VGQ4012	P.C.BOARD GUIDE RAIL B	2	
5	VMP4877	REAR FRAME	1	
6	VKA0117	PLASTIC FOOT	4	
7	VMP4878	BOTTOM FRAME	1	
8	VMP4881	SW BRACKET	1	
9	EST15372T	POWER SWITCH	1	FOR AJ-D850P
9	EST15367T	POWER SWITCH	1	FOR AJ-D850E
10	VMZ0580	SW COVER	1	
11	VJF0285	WIRE LOCKING SADDLE	4	
12	VJF1259	EDGE HOLDER	1	
13	VMP4876	FRONT FRAME	1	
14	VJF0004	WIRE SADDLE	3	
15	VMP4873	CENTER FRAME	1	
16	VXA5550	MECHANISM FRAME ASS'Y	1	
17	VGF0715	INSULATION SHEET	1	
18	VMP4874	CENTER SUB FRAME	1	
19	VGQ1543	EDGE GUARD	1	
20	VMP4875	MIDDLE FRAME	1	
21	VYQ1259	ROTARY BRACKET R	1	
22	VMP4872	SIDE FRAME R	1	
23	VJF0384	CLAMPER	2	
25	VMP5264	FPC SHIELD COVER	1	
26	VSC4384	POWER CABLE COVER	1	FOR AJ-D850E
27	VMC1318	FRAME EARTH METAL	1	FOR AJ-D850E
28	VMP5263	SHIELD COVER	1	FOR AJ-D850E
29	VMT0609	GASKET	1	FOR AJ-D850E
30	VMP5285	BOTTOM FRAME ANGLE	4	
31	VGF0714	BARRIER A	1	
32	VMT0873	GASKET (D)	10	
33	VMT0905	GASKET	2	
34	VEE0C19	POWER DC2 CABLE	1	
71	VHD5013	SCREW	2	

Ref. No.	Part No.	Part Name & Description	Pcs	Remark
72	XTN3+6F	SCREW	2	
73	XTV3+6F	SCREW	27	
74	XTV3+6FFR	SCREW	9	
75	XYN3+C6	SCREW	6	
76	XYNV3+K12S	SCREW	4	
E1	VEP80A48A	MOTHER P.C.BOARD	1	
E2	VEP82220A	F1 SERVO P.C.BOARD	1	
E3	VEP86267A	F2 SYSCON P.C.BOARD	1	
E4	VEP83410C	F4 VIDEO OUT P.C.BOARD	1	
E5	VEP83394A	F5 REC PB P.C.BOARD	1	
E6	VEP83409B	F6 VIDEO IN P.C.BOARD	1	
E7	VEP84326A	F7 A PROC P.C.BOARD	1	
E8	VEP84301B	F8 A ADDA P.C.BOARD	1	
E9	VEP84302C	H2 CUE P.C.BOARD	1	
E10	VEP85048A	H3 EQ P.C.BOARD	1	
E12	VEP85151A	BUFFER AMP P.C.BOARD	1	
E13	VEP80991A	AC HEAD IF P.C.BOARD	1	

5.9. Cassette Compartment Assembly

CASSETTE COMPARTMENT ASSEMBLY

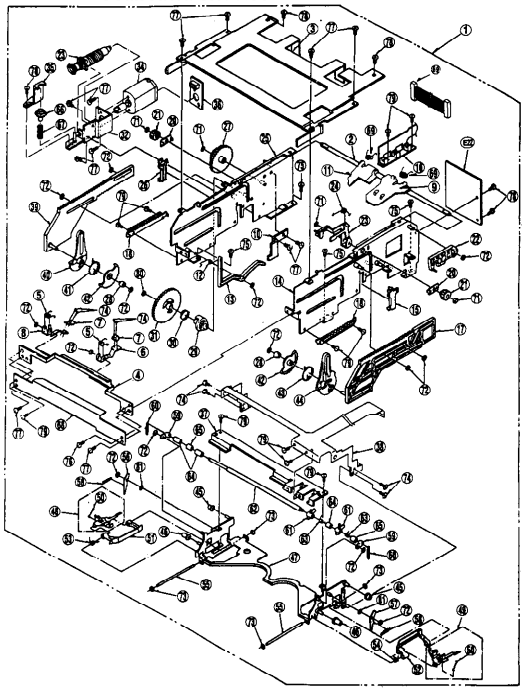

Cassette Compartment Assembly

Ref. No.	Part No.	Part Name & Description	Pcs	Remark
1	VXA6070	CASSETTE COMPARTMENT	1	(M)
2	VMS5865	MAIN SHAFT	1	
3	VMA9849	TOP PLATE	1	
4	VXA5761	FRONT GUIDE 1 ASS'Y	1	
5	VMB3075	M GUIDE SPRING	2	
6	VML3191	M GUIDE RIGHT LEVER	1	
7	VML3192	M FRONT GUIDE	2	
8	VML3190	M GUIDE LEFT LEVER	1	
9	VML3397	CASSETTE PROTECT PLATE	1	
10	VMA9760	L OPENER	1	
12	VMB2926	SPRING	1	
13	VML2A50	BLINDER PANEL OPENER	1	
23	VXL2692	OPENER ANGLE ASS'Y	1	
14	VXA6074	R SIDE PLATE 1 ASS'Y	1	
15	VML3282	SUB RAIL (R)	1	
16	VEK7695	SIDE FLEXIBLE	1	
17	VXA5766	MAIN RACK R ASS'Y	1	
18	VDG1156	WIPER RACK	2	
20	VDB1395	MAIN SHAFT ANGLE	2	
21	VDG1155	INTERLOCK GEAR	2	
22	VML3193	OPENER DRIVE ARM	1	
24	VMB2979	SPRING	1	
25	VXA6072	SIDE PLATE L 1 ASS'Y	1	
26	VML3281	SUB RAIL (L)	1	
27	VDG1254	INTERMEDIATE GEAR	1	
28	VDP1643	WIPER ROLLER	2	
29	VDG1237	CLUTCH GEAR	1	
30	VMB2980	CLUTCH SPRING	1	

Ref. No.	Part No.	Part Name & Description	Pcs	Remark
31	VDG1236	WORM WHEEL	1	
32	VXA5848	MOTOR ANGLE (A) ASS'Y	1	
33	VXP1797	E.E SLOT IN WORM ASS'Y	1	
34	VXA5597	MOTOR ASS'Y	1	(M)
35	VMA9673	EMARGENCY ANGLE	1	
36	VEK7793	MOTOR P.C.BOARD	1	
37	VMA9668	HOLDER PLATE	1	
38	VEK7715	HOLDER FLEXIBLE ASS'Y	1	
39	VXA6075	MAIN RACK (L) ASS'Y	1	
40	VML2A49	WIPER ARM L	1	
41	VMB2925	WIPER SPRING L	1	
42	VDG1163	WIPER GEAR	2	
43	VMB3013	WIPER SPRING R	1	
44	VML2A52	WIPER ARM R	1	
45	VDP1642	CASSETTE GUIDE ROLLER (2)	2	
46	VDP1641	CASSETTE GUIDE ROLLER (1)	2	
47	VXA5757	CASSETTE HOLDER 1 ASS'Y	1	
48	VXA5758	ROD L	1	
49	VXA5759	ROD R	1	
50	VMB3064	SLIDE SPRING	2	
51	VML3249	SIDE GUIDE L	1	
52	VML3250	SIDE GUIDE R	1	
53	VMB3061	SLIDE GUIDE SPRING L	1	
54	VMB3062	SLIDE GUIDE SPRING R	1	
55	VMS6108	KICK OFF ROD SHAFT	2	
56	VML2A54	KICK OFF ARM L	1	
57	VML2A55	KICK OFF ARM R	1	
58	VMB2928	KICK OFF SPRING	2	
59	VML2A53	CASSETTE HOLDER ARM	2	
60	VMB2927	CASSETTE HOLDER SPRING	2	
61	VMX2833	ML DETECTION ROLLER	2	
62	VMS5882	CASSETTE HOLDER SHAFT	1	
63	VMB3253	M-L DETECTION SPRING	2	
64	VMX2559	CASSETTE PRESSURE ROLLER(2)	3	
65	VMX2524	CASSETTE PRESSURE ROLLER(1)	1	
66	VDG1246	EMARGENCY GEAR	1	
67	VMB3109	EMARGENCY SPRING	1	
68	VMZ2661	FRONT GUIDE COVER	1	
71	VMX0653	CUT WASHER	4	
72	VMX0967	CUT WASHER	14	
73	VMX1061	WASHER	4	
74	XQN16+A2	SCREW	8	
75	XQN2+CF3	SCREW	4	
76	XQN2+A2	SCREW	2	
77	XYN2+C3	SCREW	12	
78	XQN2+A3	SCREW	5	
79	LMHD16064	SCREW	10	
80	XWGV2Y4G	WASHER	2	
81	XWGV2Z5G	WASHER	2	

Ref. No.	Part No.	Part Name & Description	Pcs	Remark
E28	**VEP80856A**	**CARRIGE P.C.BOARD**	**1**	

Ref. No.	Part No.	Part Name & Description	Pcs	Remark

5.10. Packing Parts Assembly

PACKING PARTS ASSEMBLY

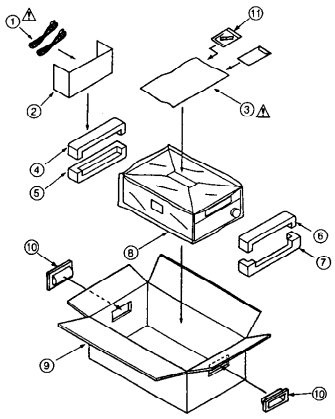

Packing Parts Assembly

Ref. No.	Part No.	Part Name & Description	Pcs	Remark
1	VJA0488	POWER CORD	1	FOR AJ-D850P
1	VJA0774	POWER CORD	1	FOR AJ-D850E
1	VJA0775	POWER CORD	1	FOR AJ-D850E
2	VPN4305	ACCESSORY PAD	1	
3	VQT7281	OPERATING INSTRUCTIONS	1	FOR AJ-D850P
3	VQT7282	OPERATING INSTRUCTIONS	1	FOR AJ-D850E
4	VPN4302	CUSHION UL	1	
5	VPN4304	CUSHION LL	1	
6	VPN4606	CUSHION UR	1	
7	VPN4607	CUSHION LR	1	
8	VPF0277	POLYETHYLENE BAG	1	FOR AJ-D850P
8	VPF0277	POLYETHYLENE BAG	1	FOR AJ-D850E
9	VPG9736	PACKING CASE	1	FOR AJ-D850P
9	VPG9737	PACKING CASE	1	FOR AJ-D850E
10	VPF0149	HANDLE	2	
11	VXF0159	EMARGENCY EJECT	1	

Ref. No.	Part No.	Part Name & Description	Pcs	Remark

5.11. Electrical Parts List

Electrical Parts List

Ref. No.	Part No.	Part Name & Description	Pcs	Remark
*E1	VEP80A48A	MOTHER P.C.BOARD	1	(RTL)
*E2	VEP82220A	F1 SERVO P.C.BOARD	1	(RTL)FOR AJ-D850P
*E2	VEP82220B	F1 SERVO P.C.BOARD	1	(RTL)FOR AJ-D850E
*E3	VEP86267A	F2 SYSCON P.C.BOARD	1	(RTL)FOR AJ-D850P
*E3	VEP86267B	F1 SYSCON P.C.BOARD	1	(RTL)FOR AJ-D850E
*E4	VEP83410C	F4 VIDEO OUT P.C.BOARD	1	(RTL)FOR AJ-D850P
*E4	VEP83410B	F4 VIDEO OUT P.C.BOARD	1	(RTL)FOR AJ-D850E
*E5	VEP83394A	F5 REC PB P.C.BOARD	1	(RTL)FOR AJ-D850P
*	VEP83405A	V BLK SUB P.C.BOARD	1	(RTL)FOR VEP83394A
*E5	VEP83394B	F5 REC PB P.C.BOARD	1	(RTL)FOR AJ-D850E
*	VEP83405B	V BLK SUB P.C.BOARD	1	(RTL)FOR VEP83394B

Ref. No.	Part No.	Part Name & Description	Pcs	Remark
*E6	VEP83409B	F6 VIDEO IN P.C.BOARD	1	(RTL)FOR AJ-D850P
*E6	VEP83449A	F6 VIDEO IN P.C.BOARD	1	(RTL)FOR AJ-D850E
*E7	VEP84326A	F7 A PROCESS P.C.BOARD	1	(RTL)
*E8	VEP84301B	F8 A AD/DA P.C.BOARD	1	(RTL)
*E9	VEP84302C	H2 CUE P.C.BOARD	1	(RTL)
*E10	VEP85048A	H3 EQ P.C.BOARD	1	(RTL)
*E11	VEP85049A	H4 RF AMP P.C.BOARD	1	(RTL)
*E12	VEP85151A	HEAD BUFFER P.C.BOARD	1	(RTL)
*E13	VEP80991A	AC HEAD I/F P.C.BOARD	1	(RTL)
*E14	VEP83224A	V/S JACK P.C.BOARD	1	(RTL)
*E15	VEP81183A	POWER 1 P.C.BOARD	1	(RTL)
*E16	VEP81184B	POWER 2 P.C.BOARD	1	(RTL)
*E17	VEP80A58A	POWER INT P.C.BOARD	1	(RTL)
*E18	VEP84183A	A JACK P.C.BOARD	1	(RTL)
*E19	VEP84187A	AES/EBU P.C.BOARD	1	(RTL)
*E20	VEP80A76A	UP FRONT 1 P.C.BOARD	1	(RTL)
*E21	VEP80852A	UP FRONT 2 P.C.BOARD	1	(RTL)
*E22	VEP86263B	FRONT CPU P.C.BOARD	1	(RTL)
*E23	VEP86148A	FRONT CPU SUB P.C.BOARD	1	(RTL)
*E24	VEP80A49B	FRONT SW P.C.BOARD	1	(RTL)
*E25	VEP80963C	FRONT VR 1 P.C.BOARD	1	(RTL)
*E26	VEP80964C	FRONT VR 2 P.C.BOARD	1	(RTL)
*E27	VEP82216B	MECHA I/F P.C.BOARD	1	(RTL)
*E28	VEP80856A	CARRIGE P.C.BOARD	1	(RTL)

Ref. No.	Part No.	Part Name & Description	Pcs	Remark

5.12. *VEP80A48A*

5.13. *VEP82220A*

5.14. *VEP82220B*

5.15. *VEP86267A*

5.16. *VEP86267B*

5.17. *VEP83410C*

5.18. *VEP83410B*

5.19. *VEP83394A*

5.20. *VEP83405A*

5.21. *VEP83394B*

5.22. *VEP83405B*

5.23. *VEP83409B*

5.24. *VEP83449A*

5.25. *VEP84326A*

5.26. *VEP84301B*

5.27. *VEP84302C*

5.28. *VEP85048A*

5.29. *VEP85049A*

5.30. *VEP85151A*

5.31. *VEP80991A*

5.32. *VEP83224A*

5.33. *VEP81183A*
5.34. *VEP81184B*
5.35. *VEP80A58A*
5.36. *VEP84183A*
5.37. *VEP84187A*
5.38. *VEP80A76A*
5.39. *VEP80852A*
5.40. *VEP86263B*
5.41. *VEP86148A*
5.42. *VEP80A49B*
5.43. *VEP80963C*
5.44. *VEP80964C*
5.45. *VEP82216B*
5.46. *VEP80856A*
6. Block Diagrams
6.1. OVERALL BLOCK DIAGRAM
BLK1
6.2. VIDEO OVERALL BLOCK DIAGRAM
BLK-2
6.3. AUDIO OVERALL BLOCK DIAGRAM
BLK-3
6.4. RF OVERALL BLOCK DIAGRAM
BLK-4
6.5. F1 SERVO BLOCK DIAGRAM
BLK-5
6.6. F2 SYSCON BLOCK DIAGRAM
BLK-6
6.7. F4 V OUT (1/2) BLOCK DIAGRAM
BLK-7
6.8. F4 V OUT (2/2) BLOCK DIAGRAM
BLK-8

6.9. F5 REC PB BLOCK DIAGRAM

BLK-9

6.10. F6 V IN BLOCK DIAGRAM (NTSC)

BLK-10

6.11. F6 V IN BLOCK DIAGRAM (PAL)

BLK-11

6.12. F7 A PROC BLOCK DIAGRAM

BLK-12

6.13. F8 A ADDA 1 BLOCK DIAGRAM

BLK-13

6.14. H2 CUE BLOCK DIAGRAM

BLK-14

6.15. H3 EQ BLOCK DIAGRAM

BLK-15

6.16. H4 RF AMP BLOCK DIAGRAM

BLK-16

6.17. HEAD BUFFER BLOCK DIAGRAM

BLK-17

7. Schematic Diagrams

7.1. SERVO

VEP82220

7.2. SYSCON

VEP86267

7.3. V OUT

VEP83410

7.4. REC PB

VEP83394

7.5. V BLK SUB

VEP83405

7.6. V IN FOR NTSC

VEP83409

7.7. V IN FOR PAL

VEP83449

7.8. A PROC

VEP84326

7.9. A ADDA

VEP84301

7.10. CUE

VEP84302

7.11. EQ

VEP85048

7.12. RF AMP

VEP85049

7.13. HEAD BUFF

VEP85151

7.14. MOTHER

VEP80A48

7.15. V/S JACK

VEP83224

7.16. POWER 1

VEP81183

7.17. POWER 2

VEP81184

7.18. MECHA IF

VEP82216

7.19. A JACK

VEP84183

7.20. FRONT CPU

VEP86263

7.21. FRONT CPU SUB

VEP86148

7.22. FRONT SW

VEP80A49

7.23. FRONT VR 1

VEP80963

7.24. FRONT VR 2

VEP80964

7.25. POWER CONNECT

VEP80A58

7.26. CARRIGE

VEP80856

7.27. AES/EBU

VEP84157

7.28. UP FRONT 2

VEP80852

7.29. UP FRONT 1

VEP80A76

8. Circuit Board Diagrams

8.1. CUE P. C. BOARD

VEP84302

8.2. SERVO P. C. BOARD

VEP82220

8.3. SYSCON P. C. BOARD

VEP86267

8.4. V OUT P. C. BOARD

VEP83410

8.5. REC PB P. C. BOARD

VEP83394

8.6. VBLK SUB P. C. BOARD

VEP83405

8.7. V IN P. C. BOARD FOR NTSC

VEP83409

8.8. V IN P. C. BOARD FOR PAL

VEP83449

8.9. A PROC P. C. BOARD

VEP84326

8.10. A ADDA P. C. BOARD

VEP84301

8.11. EQ P. C. BOARD

VEP85048

8.12. RF AMP P. C. BOARD

VEP85049

8.13. MOTHER P. C. BOARD

VEP80A48

8.14. HEAD BUFF P. C. BOARD

VEP85151

8.15. MECHA IF P. C. BOARD

VEP82216

8.16. FRONT SW P. C. BOARD

VEP80A49

8.17. FRONT CPU P. C. BOARD

VEP86263

8.18. UP FRONT 1 P. C. BOARD

VEP80A76

8.19. FRONT CPU SUB P. C. BOARD

VEP86148

8.20. A JACK P. C. BOARD

VEP84183

8.21. POWER 1 P. C. BOARD

VEP81183

8.22. POWER 2 P. C. BOARD

VEP81184

8.23. FRONT VR1 P. C. BOARD

VEP80963

8.24. FRONT VR2 P. C. BOARD

VEP80964

9. PDF LINK ENGLISH

9.1. Specifications

9.2. SAFETY PRECAUTIONS

9.3. Operating Instructions

AJ-D850P

AJ-D850E

9.4. Service Information

9.5. Maintenance/Disassembly Procedures & Mechanical Adjustment

9.6. Electrical Adjustment

9.7. Exploded Views & Parts List

9.8. Block Diagrams

9.8.1. OVERALL BLOCK DIAGRAM

BLK1

9.8.2. VIDEO OVERALL BLOCK DIAGRAM

BLK-2

9.8.3. AUDIO OVERALL BLOCK DIAGRAM

BLK-3

9.8.4. RF OVERALL BLOCK DIAGRAM

BLK-4

9.8.5. F1 SERVO BLOCK DIAGRAM

BLK-5

9.8.6. F2 SYSCON BLOCK DIAGRAM

BLK-6

9.8.7. F4 V OUT (1/2) BLOCK DIAGRAM

BLK-7

9.8.8. F4 V OUT (2/2) BLOCK DIAGRAM

BLK-8

9.8.9. F5 REC PB BLOCK DIAGRAM

BLK-9

9.8.10. F6 V IN BLOCK DIAGRAM (NTSC)

BLK-10

9.8.11. F6 V IN BLOCK DIAGRAM (PAL)

BLK-11

9.8.12. F7 A PROC BLOCK DIAGRAM

BLK-12

9.8.13. F8 A ADDA 1 BLOCK DIAGRAM

BLK-13

9.8.14. H2 CUE BLOCK DIAGRAM

BLK-14

9.8.15. H3 EQ BLOCK DIAGRAM

BLK-15

9.8.16. H4 RF AMP BLOCK DIAGRAM

BLK-16

9.8.17. HEAD BUFFER BLOCK DIAGRAM

BLK-17

9.9. Schematic Diagrams

9.9.1. SERVO

VEP82220

9.9.2. SYSCON

VEP86267

9.9.3. V OUT

VEP83410

9.9.4. REC PB

VEP83394

9.9.5. V BLK SUB

VEP83405

9.9.6. V IN FOR NTSC

VEP83409

9.9.7. V IN FOR PAL

VEP83449

9.9.8. A PROC

VEP84326

9.9.9. A ADDA

VEP84301

9.9.10. CUE

VEP84302

9.9.11. EQ

VEP85048

9.9.12. RF AMP

VEP85049

9.9.13. HEAD BUFF

VEP85151

9.9.14. MOTHER

VEP80A48

9.9.15. V/S JACK

VEP83224

9.9.16. POWER 1

VEP81183

9.9.17. POWER 2

VEP81184

9.9.18. MECHA IF

VEP82216

9.9.19. A JACK

VEP84183

9.9.20. FRONT CPU

VEP86263

9.9.21. FRONT CPU SUB

VEP86148

9.9.22. FRONT SW

VEP80A49

9.9.23. FRONT VR 1

VEP80963

9.9.24. FRONT VR 2

VEP80964

9.9.25. POWER CONNECT

VEP80A58

9.9.26. CARRIGE

VEP80856

9.9.27. AES/EBU

VEP84157

9.9.28. UP FRONT 2

VEP80852

9.9.29. UP FRONT 1

VEP80A76

9.10. Circuit Board Diagrams

9.10.1. CUE P. C. BOARD

VEP84302

9.10.2. SERVO P. C. BOARD

VEP82220

9.10.3. SYSCON P. C. BOARD

VEP86267

9.10.4. V OUT P. C. BOARD

VEP83410

9.10.5. REC PB P. C. BOARD

VEP83394

9.10.6. VBLK SUB P. C. BOARD

VEP83405

9.10.7. V IN P. C. BOARD FOR NTSC

VEP83409

9.10.8. V IN P. C. BOARD FOR PAL

VEP83449

9.10.9. A PROC P. C. BOARD

VEP84326

9.10.10. A ADDA P. C. BOARD

VEP84301

9.10.11. EQ P. C. BOARD

VEP85048

9.10.12. RF AMP P. C. BOARD

VEP85049

9.10.13. MOTHER P. C. BOARD

VEP80A48

9.10.14. HEAD BUFF P. C. BOARD

VEP85151

9.10.15. MECHA IF P. C. BOARD

VEP82216

9.10.16. FRONT SW P. C. BOARD

VEP80A49

9.10.17. FRONT CPU P. C. BOARD

VEP86263

9.10.18. UP FRONT 1 P. C. BOARD

VEP80A76

9.10.19. FRONT CPU SUB P. C. BOARD

VEP86148

9.10.20. A JACK P. C. BOARD

VEP84183

9.10.21. POWER 1 P. C. BOARD

VEP81183

9.10.22. POWER 2 P. C. BOARD

VEP81184

9.10.23. FRONT VR1 P. C. BOARD

VEP80963

9.10.24. FRONT VR2 P. C. BOARD

VEP80964

RF OVERALL BLOCK DIAGRAM

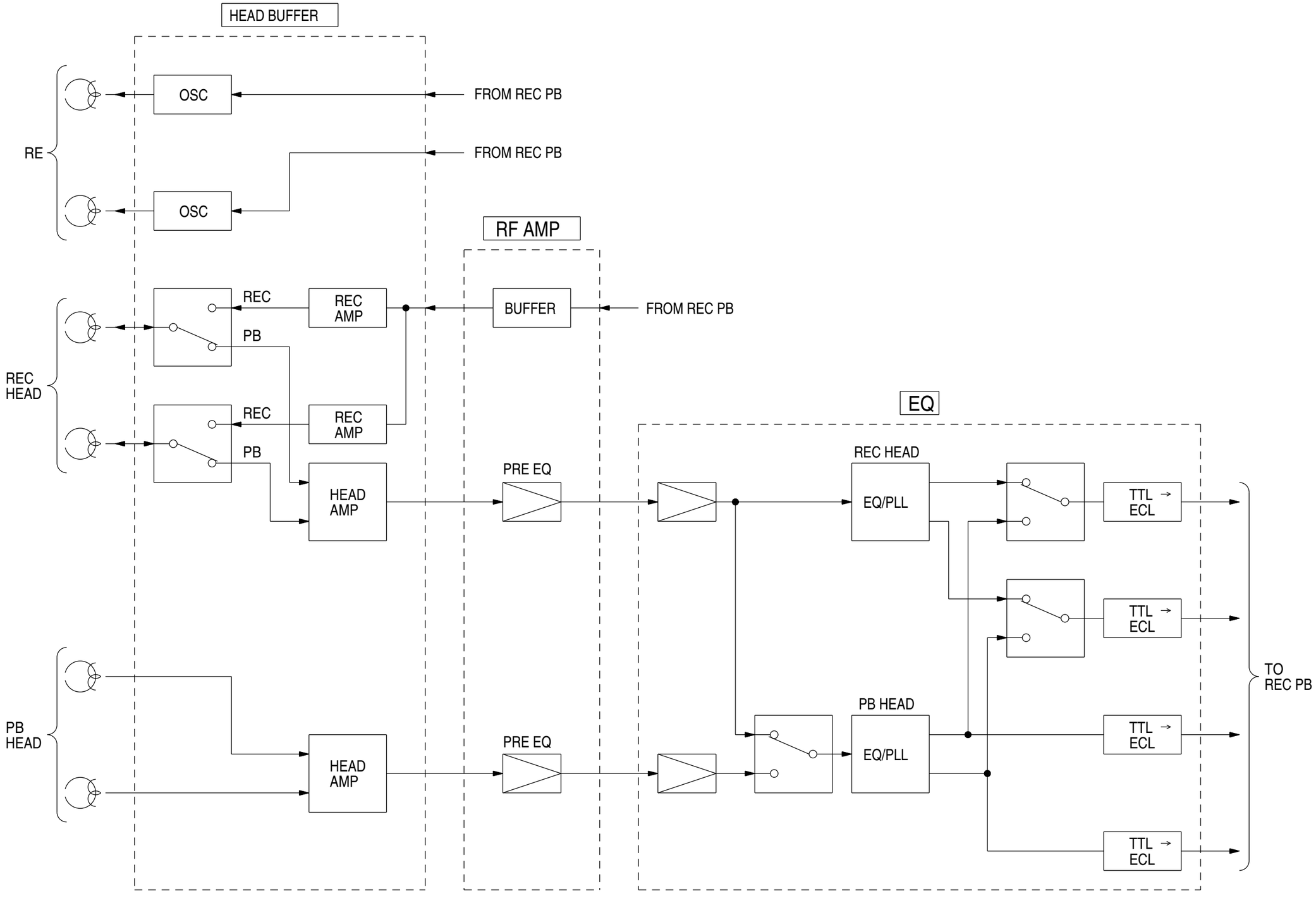

SAFETY PRECAUTIONS

GENERAL GUIDELINES

1. When servicing, observe the original lead dress. If a short circuit is found, replace all parts which have been overheated or damaged by the short circuit.
2. After servicing, see to it that all the protective devices such as insulation barriers, insulation papers shields are properly installed.
3. After servicing, make the following leakage current checks to prevent the customer from exposed to shock hazards.

LEAKAGE CURRENT COLD CHECK

1. Unplug the AC cord and connect a jumper between the two prongs on the plug.
2. Measure the resistance value, with an ohm meter, between the jumpered AC plug and each exposed metallic cabinet part on the equipment such as screwheads, connectors, control shafts, etc. When the exposed metallic part has a return path to the chassis, the reading should be between 1MΩ and 5.2MΩ.
   When the exposed metal does not have a return path to the chassis, the reading must be ∞.

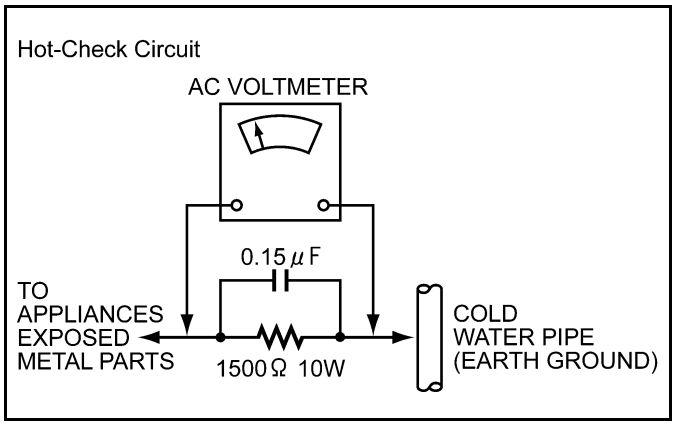

Figure 1

LEAKAGE CURRENT HOT CHECK (See Figure 1)

1. Plug the AC cord directly into the AC outlet.
   Do not use an isolation transformer for this check.
2. Connect a 1.5kΩ, 10W resistor, in parallel with a 1.5μF capacitor, between each exposed metallic part on the set an a good earth ground such as a water pipe, as shown in Figure 1.
3. Use an AC voltmeter, with 1000 ohms/volt or more sensitivity, to measure the potential across the resistor.
4. Check each exposed metallic part, and measure the voltage at each point.
5. Reverse the AC plug in the AC outlet repeat each of the above measurements.
6. The potential at any point should not exceed 0.75 volts RMS. A leakage current tester (Simpson Model 229 equivalent) may be used to make the hot checks, leakage current must not exceed 1/2 milliamp. in case a measurement is outside of the limits specified, there is a possibility of a shock hazard, and the equipment should be repaired and rechecked before it is returned to the customer.

ELECTROSTATICALLY SENSITIVE (ES) DEVICES

Some semiconductor (solid state) devices can be damaged easily by static electricity. Such components commonly are called Electrostatically sensitive (ES) Devices. Examples of typical ES devices are integrated circuits and some field-effect transistors and semiconductor "chip" components. The following techniques should be used to help reduce the incidence of component damage caused by static electricity.

LEAKAGE CURRENT COLD CHECK

1. Immediately before handling any semiconductor component or semiconductor-equipped assembly, drain off any electrostatic charge on your body by touching a known earth ground.
   Alternatively, obtain and wear a commercially available discharging wrist strap device, which should be removed for potential shock reasons prior to applying power to the unit under test.
2. After removing an electrical assembly equipped with ES devices, place the assembly on a conductive surface such as aluminum foil, to prevent electrostatic charge buildup or exposure of the assembly.
3. Use only a grounded tip soldering iron to solder or unsolder ES devices.
4. Use only an anti-static solder removal device classified as "anti-static" can generate electrical charges sufficient to damage ES devices.
5. Do not use freon-propelled chemicals. These can generate electrical charges sufficient to damage ES devices.
6. Do not remove a replacement ES device from its protective package until immediately before you are ready to install it. (most replacement ES devices are packaged with leads electrically shorted together by conductive material).
7. Immediately before removing the protective material from the leads of a replacement ES device, touch the protective material to the chassis or circuit assembly into which the device will be installed.
   CAUTION: Be sure no power is applied to the chassis or circuit, and observe all other safety precautions.
8. Minimize bodily motions when handling unpackaged replacement ES devices. (Otherwise hamless motion such as the brushing together of your clothes fabric or the lifting of your foot from a carpeted floor can generate static electricity sufficient to damage an ES device).

X-RADIATION

WARNING

1. The potential source of X-Radiation in EVF sets is the High Voltage section and the picture tube.
2. When using a picture tube test jig for service, ensure that jig is capable of handling 10kV without causing X-Radiation.

NOTE: It is important to use an accurate periodically calibrated high voltage meter.

3. Measure the High Voltage. The meter (electric type) reading should indicate 2.5kV, ±0.15kV. if the meter indication is out of tolerance, immediate service and correction is required to prevent the possibility of premature component failure. To prevent an X-Radiation possibility, it is essential to use the specified picture tube.

SECTION 2

SERVICE INFORMATION

CONTENTS

1. ERROR RATE CONFIRMATION PROCEDURE.....2-1
   1. FUNCTION OF FRONT SWITCH 2-1
      1-1. FRONT PANEL BOTTOM SIDE.....2-1
      1-2. FRONT PANEL BOTTOM SECTION 2-1
      1-3. TC MODE SW (TC/CTL SWITCH AND TC/UB SWITCH ON THE FRONT PANEL).....2-1
      1-4. CORRESPOND TO SERVICE MENU OF FRONT SWITCHES.....2-1
   2. CONDITION OF ERROR RATE DISPLAY 2-2
   3. SPECIFICATION OF ERROR RATE.....2-2
2. SERVICE MENU INFORMATION.....2-3
3. HOW TO RESET THE HOUR METER 2-11
4. HOW TO CONFIRM THE SOFTWARE VERSION 2-12
5. REPLACEMENT PROCEDURE OF THE P.C.BOARD 2-13
6. SERVO LED INFORMATION 2-14
7. AUTO OFF ERROR MESSAGE.....2-15
8. AUTO OFF CHECK POINT TABLE 2-19

1. ERROR RATE CONFIRMATION PROCEDURE

1. Function of Front Switch

1-1. Front Panel Bottom side

DIP SW	ON	OFF
SW1-1	•SERVICE mode (SERVICE MENU display) •SW1-2 to 1-4 Valid	•NORMAL mode (SET UP MENU display) •SW1-2 to 1-4 Invalid
SW1-2	Error Rate Display Mode: SLOW	Error Rate Display Mode: FAST
SW1-3	Force R/P Head Playback	Force PB Head Playback
SW1-4	VITABI Decode ON	VITABI Decode OFF

***NOTE:** In case of DIP SW1-1 is ON, SW1-2,1-3 and 1-4 becomes valid.

1-2. Front Panel Bottom section

	4F	2F
CF SW	Error Rate is display	Error Rate is not display

	ON	OFF
SYNCHRONIZE SW	Conceal OFF	Conceal ON

***NOTE:** In case of DIP SW1-1 is ON, above switches change the function as indicated as above table.

1-3. TC MODE SW (TC/CTL switch and TC/UB switch on the Front Panel)

Inner and Outer correction are set by combination of TC/CTL and TC/UB switches setting.

MODE	INNER Correction	OUTER Correction
CTL	OFF	OFF
TC	ON	OFF
UB	ON	ON

***NOTE:** In case of DIP SW1-1 is ON, above switches change the function as indicated as above table.

1-4. Correspond to Service Menu of Front Switches.

The Menu function in the RF ADJUST menu and Front switches are correspond as follows.

DIP SW1 (Front Panel Bottom side)

DIP SW	MENU No.	Item
SW1-2	B28	ERROR MODE
SW1-3	B27	PB MODE
SW1-4	B26	VITERBI MODE

(Front Panel Bottom section)

	MENU No.	Item
SYNCHRONIZE SW	B25	CONCEAL MODE

TC MODE SW (TC/CTL switch and TC/UB switch on the Front Panel)

MODE	MENU No.	Item
CTL, TC, UB	B24	ECC MODE

NOTE: Setting of Service Menu have priority to setting of Front Switches, when the Service Menu is open.

2. Condition of Error Rate display

①.DIP SW1-1 : **ON** ②.CF SW : **4F**	⇨ Audio Level Meter on the Front Panel changed to Error Rate display mode.

The Level Meter indicated as level of Error Rate, Audio CH1(Lch), Audio CH2(Rch), Video CH1(Lch) and Video CH2(Rch).
The Video and Audio Error Rate displayed on Level Meter as indicated as below figure.(front view at meter).

3. Specification of Error Rate

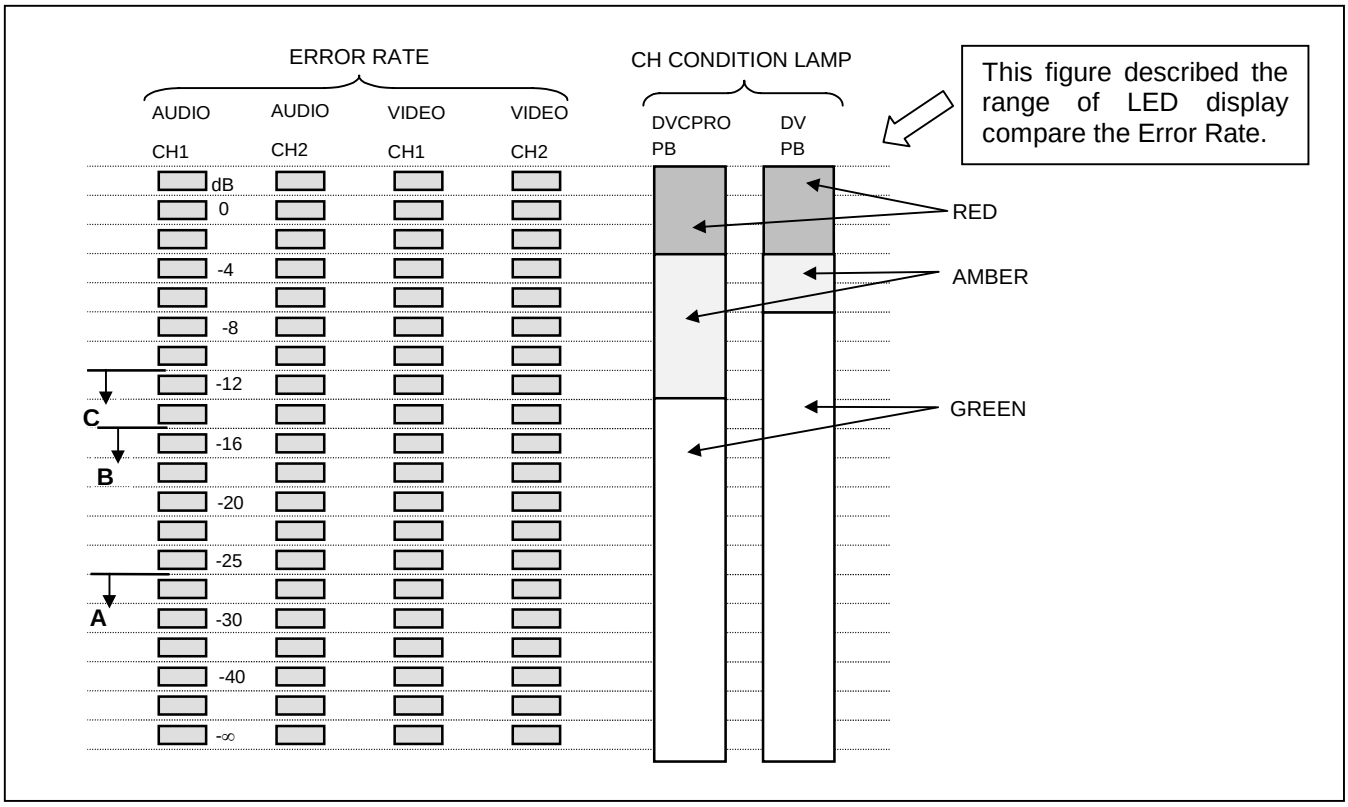

When confirm the Error Rate, please refer to specification of Error Rate as indicated as below, it level follow the menu setting as indicated as below table.

Menu setting

Item of the MENU	DVCPRO	DV
B28 : ERROR MODE	FAST	FAST
B27 : PB MODE	PB H	RP H
B26 : VITERBI MODE	ON	ON
B25 : CONCEAL MODE	ON	ON
B24 : ECC MODE	AL OFF	AL OFF

NOTE: Left side table described setting by Service Menu. Those setting can be set by Front SW as described as previous page.

Specification of Error Rate

	VTR mode	Specification of Error Rate
DVCPRO (PB)	DVCPRO (PB Head) alignment tape playback	Under the "A" position at level meter
DV (R/P)	DV (RP Head) Alignment tape playback	Under the "B" position at level meter
DVCPRO (Confi)	DVCPRO confidence playback (REC mode)	Under the "C" position at level meter

2. Service Menu Information

< Operation Procedure >

(1) The “REMOTE/LOCAL” switch set to “LOCAL” on the front panel.
(2) Set the Dip SW 1-1 to ON position on the bottom side of front panel.
(3) Press the MENU button on the front panel, then appeared Main menu of Service menu on the screen as indicated as below.

```
SERVICE-MENU
No. A00

* A00  :  SERVO ADJUST
  B00  :  EQ ADJUST
  C00  :  RF ADJUST
  D00  :  VIDEO ADJUST
  E00  :  AUDIO ADJUST
  H00  :  OTHER ADJUST
  END
```

MAIN Menu

(4) Move the star mark “*” by Search Dial to select the each Adjustment menu.
(5) Press the SET button, then open the Adjustment Menu follow the selected item (A00 to H00) on the Main menu.
(6) Each Adjustment item are selected by Search Dial.
(7) For change the value or setting, holding the Search button while rotate the Search Dial.(same way of SET UP menu).

< KEY function for Service Menu >

[MENU button] : ①. Move to Main menu on Service menu from SET UP menu.
②. Move to Main menu from ADJUST menu on the Service menu
③. Move to SET UP menu from Main menu on Service menu.

[SET button] : ①. Move to ADJUST menu from Main menu on Service menu.

[SERACH DIAL] : ①. Move the cursor “*” for select the each item.
②. Change the numerical value or setting of each item on ADJUST menu.
(Increase adjustment value by turn Search Dial to clockwise and decrease adjustment value by turn Search Dial to counter-clockwise.)

[SEARCH button] ①. For change the numerical value or setting value, holding this button while rotate the Search Dial.

< Store the adjustment and setting value to the memory >

When menu is escape from Adjustment menu to Main menu by press MENU button, each data write to the memory.

The contents of each “Adjustment menu” which are described on behind page.

Press the MENU button on the Main menu condition, then escape from Service menu mode.

A00:SERVO ADJUST

No.	ITEM	SETTING VALUE	CONTENTS OF SETTING and ADJUSTMENT	REMARK
A01	PG SHIFTER	0 ~ **1649** ~ 4095 0 ~ **1649** ~ 4095	(RISE display) PG SHIFTER AUTO ADJ (FALL display).	Elec. Adj
A02	T TORQUE	-128 ~ **0** ~ +127 Initial:0	Correct the offset value of T REEL MOTER DRIVE	Elec. Adj
A03	S TORQUE	-128 ~ **0** ~ +127 Initial:0	Correct the offset value of S REEL MOTER DRIVE	Elec. Adj
A04	PB GAIN P	-128 ~ **1** ~ +127	LISTA SENSITIVITY Adj. (PB HEAD)	LISTA
A05	PB LINEAR P	0 1 ON	LISTA LINEARITY Adj. (PB HEAD)	LISTA
A06	RP GAIN P	-128 ~ **1** ~ +127	LISTA SENSITIVITY Adj. (R/P HEAD)	LISTA
A07	RP LINEAR P	0 1 ON	LISTA LINEARITY Adj. (R/P HEAD)	LISTA
A08	RP GAIN	-128 ~ **1** ~ +127	LISTA CONSUMER DV COMPATIBILITY CONFIRMATION	LISTA
A09	RP LINEAR	0 1 ON	LISTA CONSUMER DV LINEARITY Adj.	LISTA
A10	MOTOR CHECK	0 OFF 1 CAP 2 DRUM 3 T REEL 4 S REEL		* NOT USED

B00:EQ ADJUST

Note: The mark "●" indicated as common adjustment item for DVCPRO and DV.

NO	ITEM	SETTING VALUE	CONTENTS OF SETTING and ADJUSTMENT	REMARK
B01	PB PLL PHASE	-128 ~ **40** ~ +127	PB PLL PHASE Adj. ●	Elec. Adj
B02	PB PLL SLICE	-128 ~ **-70** ~ +127	PB PLL SLICE LEVEL Adj. ●	Elec. Adj
B03	PB AEQ	-128 ~ +**75** ~ +127	PB AUTO EQ Adj. ●	Elec. Adj
B04	PB GAIN L	-128 ~ **+30** ~ +127	PB Lch EQ GAIN Adj. ●	Elec. Adj
B05	PB PHASE L	-128 ~ **-55** ~ +127	PB Lch EQ PHASE Adj. ●	Elec. Adj
B06	PB GAIN R	-128 ~ **+30** ~ +127	PB Rch EQ GAIN Adj. ●	Elec. Adj
B07	PB PHASE R	-128 ~ **-55** ~ +127	PB Rch EQ PHASE Adj. ●	Elec. Adj
B08	RP PLL PHASE	-128 ~ **+50** ~ +127	RP PLL PHASE Adj.	Elec. Adj
B09	RP PLL SLICE	-128 ~ **-70** ~ +127	RP PLL SLICE LEVEL Adj.	Elec. Adj
B10	RP AEQ	-128 ~ **+75** ~ +127	RP AUTO EQ Adj.	Elec. Adj
B11	RP GAIN L	-128 ~ **+30** ~ +127	RP Lch EQ GAIN Adj.	Elec. Adj
B12	RP PHASE L	-128 ~ **-55** ~ +127	RP Lch EQ PHASE Adj.	Elec. Adj
B13	RP GAIN R	-128 ~ **+30** ~ +127	RP Rch EQ GAIN Adj.	Elec. Adj
B14	RP PHASE R	-128 ~ **-55** ~ +127	RP Rch EQ PHASE Adj.	Elec. Adj
B15	VTB PHASE 1	-128 +127	VITABI A/D CLOCK PHASE Adj. (LSB)	
B16	VTB PHASE 2	-128 +127	VITABI A/D CLOCK PHASE Adj.	
B17	VTB PHASE 3	-128 +127	VITABI A/D CLOCK PHASE Adj. (MSB)	
B18	VTB PHS FINE	-128 ~ **-1** ~ +127	VITABI A/D CLOCK PHASE ADJ. (FINE Adj.)	
B19	PB MAIN DL	-128 ~ **-40** ~ +127	PB EQ DELAY LINE Adj. ●	Elec. Adj
B20	RP MAIN DL	-128 ~ **-40** ~ +127	RP EQ DELAY LINE Adj.	Elec. Adj
B21	PB PLL VCO	-128 ~ **+66** ~ +127	PB PLL VCO Adj.	
B22	RP PLL VCO	-128 ~ **+66** ~ +127	RP PLL VCO Adj.	
B23	VTB GAIN	-31 ~ **-15** ~ +32	VITABI A/D INPUT LEVEL Adj. ●	Elec. Adj
B24	ECC MODE	0 ALL ON 1 OT OFF 2 AL OFF	ERROR CORRECTION INNER ON/OUTER ON ERROR CORRECTION INNER ON/OUTER OFF ERROR CORRECTION INNER OFF/OUTER OFF	
B25	CONCEAL MODE	0 ON 1 OFF	ERROR CONCEALMENT ON ERROR CONCEALEMENT OFF *This CONCEAL MODE function is only effective, when the above ECC MODE set to "ALL ON".	

B26	VITABI MODE	0 AUTO 1 ON 2 OFF	VITABI ON VITABI ON VITABI OFF	
B27	PB MODE	0 PB H 1 RP H	FORCED PB HEAD PLAYBACK FORCED RP HEAD PLAYBACK	
B28	ERROR MODE	0 FAST 1 SLOW	ERROR DISPLAY MODE “FAST” ERROR DISPLAY MODE “SLOW”	
B29	EQ AUTO ADJ	0 STOP 1 START	 PB EQUALIZER AUTO Adj.	*NOT USED
B30	DEFAUT	0 LOAD 1 SAVE	LOAD THE FACTORY ADJUSTMENT VALUE SAVE THE ADJUSTMENT VALUE	

Note: The items (No. B24 to B28), which operated only active on the EQ ADJUST mode. And these function have priority over setting of DIP SW and Front SW as indicated as below.

1. Function of Front Switch
   Front Rear DIP SW

DIPSW	**ON**	**OFF**
SW1	•Service MENU SW2~4 Valid	•SET UPMENU •SW2~4 Invalid
SW2	Error Rate Display: SLOW	Error Rate Display: FAST
SW3	Force R/P Head Playback	Force PB Head Playback
SW4	Vitabi Decode ON	Vitabi Decode OFF

Front Bottom DISPLAY

	4F	**2F**
CF	Error Rate is displayed	Error Rate is not displayed.

	ON	**OFF**
SYNCHRONIZE	Conceal OFF	Conceal ON

Front TC MODE SW

	INNER Correction	**OUTER Correction**
CTL	OFF	OFF
TC	ON	OFF
UB	ON	ON

[How to LOAD or SAVE the adjustment value]

NOTE: This item (B30) is only active on the tape pass condition.

Press the SET button , the appear the message as indicated as below.

*SAVE
LOAD
END

Set the cursor "*" to SAVE or LOAD and press the SET button, then execute the program.

NOTE: 1. The VTR have two memory area for the adjustment value as indicated as below.

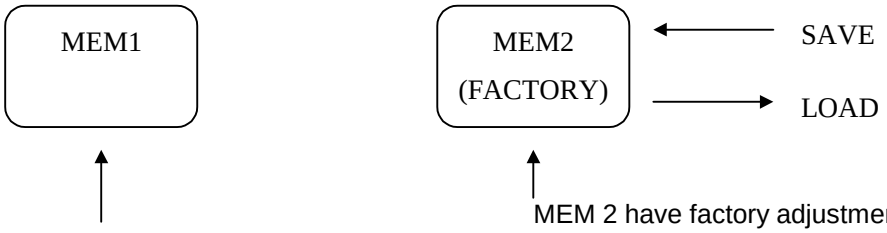

MEM 2 have factory adjustment value.

MEM 1 is always renewed follow the adjustment value on the RF and EQ adjustment menu.

2. We recommended the SAVE function does not use or the market, because the renewed adjustment value is stored to MEM 1 automatically.

C00:RF ADJUST

NO	ITEM	SETTING VALUE	CONTENTS OF SETTING and ADJUSTMENT	REMARK
C01	REC CURR L	-128 ~ **0** ~ +127	SETTING OF REC CURR (RP Lch)	Elec. Adj
C02	REC FREQ L	-128 ~ **0** ~ +127	SETTING OF REC FREQ (RP Lch)	Elec. Adj
C03	REC CURR R	-128 ~ **0** ~ +127	SETTING OF REC CURR (RP Rch)	Elec. Adj
C04	REC FREQ R	-128 ~ **0** ~ +127	SETTING OF REC FREQ (RP Rch)	Elec. Adj
C05	RE CURR L	-128 ~ **0** ~ +127	SETTING OF ERASE CURR (RE Lch)	Elec. Adj
C06	RE CURR R	-128 ~ **0** ~ +127	SETTING OF ERASE CURR (RE Rch)	Elec. Adj
C07	RP PHASE L	-128 ~ **0** ~ +127	RP Lch PLAYBACK PHASE CORRECTION	
C08	RP PHASE R	-128 ~ **0** ~ +127	RP Rch PLAYBACK PHASE CORRECTION	
C09	RP MAG L	-128 ~ **0** ~ +127	RP Lch PLAYBACK OUTPUT GAIN CORRECTION	
C10	RP MAG R	-128 ~ **0** ~ +127	RP Rch PLAYBACK OUTPUT GAIN CORRECTION	
C11	PB PHASE L	-128 ~ **0** ~ +127	PB Lch PLAYBACK PHASE CORRECTION	
C12	PB PHASE R	-128 ~ **0** ~ +127	PB Rch PLAYBACK PHASE CORRECTION	
C13	PB MAG L	-128 ~ **0** ~ +127	PB Lch PLAYBACK OUTPUT GAIN CORRECTION	
C14	PB MAG R	-128 ~ **0** ~ +127	PB Rch PLAYBACK OUTPUT GAIN CORRECTION	
C15	REC SIG	0 NORMAL 1 CW		* NOT USED
C16	ECC MODE	0 ALL ON 1 OT OFF 2 AL OFF		
C17	CONCEAL MODE	0 ON 1 OFF		
C18	VITERBI MODE	0 AUTO 1 ON 2 OFF		
C19	PB MODE	0 PB H 1 RP H		
C20	ERROR MODE	0 FAST 1 SLOW	ERROR RATE INDICATION FAST ERROR RATE INDICATION SLOW	
C21	TRACKING MOD	0 ATF 1 CTL	SELECTION OF TRACKING CONTROL MODE *This function is only active on the service Menu mode.	
C22	TRACKING VAL	-128 ~ **0** ~ +127 Initial: 0	" IN CASE OF SELECT THE CTL MODE ON ABOVE ITEM C20, TRACKING VALUE IS ADJUSTABLE" *TRACKING VALUE RANGE DATA 0 - 116 : RELATIVE TO 1 TRACK THEREFORE 0 TO 127 IS RELATIVE TO JUST OVER 18 um	
C23	REC OPTIMAIZ	0 STOP 1 START		* NOT USED
C24	DEFAUT	0 LOAD 1 SAVE	LOAD THE FACTORY ADJUSTMENT VALUE SAVE THE ADJUSTMENT VALUE	

D00:VIDEO ADJUST

NO	ITEM	SETTING VALUE	CONTENTS OF SETTING and ADJUSTMENT	REMARK
D01	VIDEO BLANK	0 NORMAL 1 OFF	NORMAL : The video signal is blanked at video edge portion for protect the overshoot. OFF : Release the blanking function.	ELEC. ADJ.
D02	V IN PLL	0 OFF 1 ON		
D03	VIDEO MUTE	0 NORMAL 1 MUTE		
D04	SELF DUB GEN	0 OFF 1 3RD 2 10TH		* NOT USED
D05	DUBBING MODE	0 FREEZE 1 REPEAT		* NOT USED
D06	EE TEST MODE	0 NORMAL 1 DCI RT		
D07	HEAD SELECT	0 PB. REC 1 PB 2 REC. PB 3 REC	PRIOR TO PB HEAD FORCED PB HEAD PRIOR TO REC HEAD FORCED REC HEAD	
D08	V SETUP =NTSC ONLY=	0 OFF 1 ON	VALID / INVALID SELECTION FOR SETUP MENU 613 : VIN SETUP AND 614 : VOUT SETUP 0 : SETUP MENU 613/614 NO DISPLAY 1 : SETUP MENU 613/614 DISPLAY	
D10	CMPNT HUE =NTSC ONLY=	0 OFF 1 ON	VALID / INVALID SELECTION FOR SETUP MENU 615 : CMPNT HUE 0 : SETUP MENU 615 NO DISPLAY 1 : SETUP MENU 615 DISPLAY	
D11	CMPNT SET UP =NTSC ONLY=	0 OFF 1 ON	VALID / INVALID SELECTION FOR SETUP MENU 616 : CMPNT SET UP 0 : SETUP MENU 616 NO DISPLAY 1 : SETUP MENU 616 DISPLAY	
D13	TELETEXT INI =NTSC ONLY=	0 MOJI 1 NABTS	SELECT DEFALUT FACTORY (DEFALUT) VALUE OF IIEM 802:TELETEXT SEL ON SET UP MENU. 0 : MOJI (FOR DOMESTIC) 0 : NABTS (FOR OVERSEAS)	

E00:AUDIO ADJUST

NO.	ITEM	SETTING VALUE	CONTENTS OF SETTING and ADJUSTMENT	REMARK
E01	MASTER REF	0 FS-20 1 FS-18 2 FS-12	Select the position of " Reference level marker " on the Audio level Meter (CH1, CH2, CUE). 0: Set to -20dB position (For NTSC) 1: Set to -18dB position (For PAL) 2: Set to -12dB Position	
E05	REF LEVEL2	0 0dB 1 -3dB	VALID / INVALID SELECTION IN/OUT REFERENCE LEVEL FOR SET UP MENU. 0: VALID SELECTION -20 / 0 / +4dB 1: ONLY -3dB	
E06	A VCO ADJ	0 NORMAL 1 48KHz 2 44KHz 3 32KHz	SELECT THE ADJUSTMENT MODE OF AUDIO VCO ADJUSTMENT MODE.	
E07	MIC IN LEV	0 DIS 1 ENA	VALID / INVALID SELECTION -60dB FOR SET UP MENU. 700 : CH1 IN LV AND 701 : CH2 IN LV 0: VALID SELECTION +4dB / 0 / -20dB 1: VALID SELECTION +4dB / 0 / -20dB / -60dB	

H00:OTHER ADJUST

H01	STILL LIMIT	0 2min 1 1min	SELECTED UPPER LIMITED VALUE OF ITEM 400:STILL TIMER ON SET UP MENU. 0: 2min 1: 6min	

3. HOW TO RESET THE HOUR METER

(1) Set the DIP SW 1-1 to OFF (Normal mode) position on the front panel bottom side.
(2) Set the Dip SW 501-1 to ON and Dip SW 501-2 to OFF position on the SYSCON P.C.B.
(3) Press “DIAG” button on the front panel, then appeared Warning Message on the screen.
NOTE: Normally message of “NO WARNING” appeared on the screen.
(4) Press “SEARCH” button on the front panel, then appeared HOUR METER information on the screen as indicated as below.

DIAG-MENU HOUR METER

***H00 : OPERATION**	**200H**
H01 : DRUM RUN	**50H**
H02 : TAPE RUN	**30H**
H03 : THERADING	**100H**
H11 : DRUM RUN r	**50H**
H12 : TAPE RUN r	**30H**
H13 : THERADING r	**100H**

[Display mode]

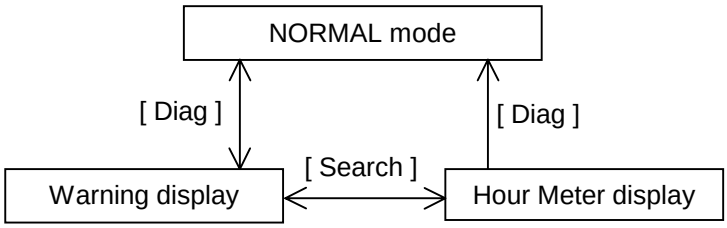

(5) Set the cursor to mark “r” indicated item (item No.11,12 or 13) and press the “RESET” button on the front panel, then appeared message on the screen as indicated as below.

HOURS METER INIT SET

DRUM RUN r OK?
YES <PLAY> NO <STOP>

***** When press the “PLAY” button, then execute the reset function.
When press the “STOP” button, then cancel the reset command.

4. HOW TO CONFIRM THE SOFTWARE VERSION

1. Turn on the power.
2. Press the EJECT button.
3. Press the PLAY and STOP button simultaneously, then displayed the soft version on the counter display of the front panel.

   <example> FRONT n 1.00 - 01 - 1.00

4. Press the PLAY and STOP button repeatedly, change the display of all soft version in order as indicated as below.

   SYSCON → SERVO → A/V → SBC 1 → SBC 2 →I/F → FRONT

ROM location indicated as below table

Name	Reference number and Board
SYSCON	IC2 (SYSCON Board)
SERVO	IC235 (SERVO Board)
A/V	IC702 (A/V Board)
SBC 1	IC870 (REC PB Board)
SBC 2	IC910 (REC PB Board)
I/F	IC503 (SYSCON Board)
FRONT	IC2 (FRONT CPU Board)

5. Replacement Procedure of the P. C. Board

Please refer to below table, It indicated as which board is necessary adjustment after board exchanged. And perform the adjustment follow the adjustment procedure on this manual.

	Board	Adj.		Board	Adj.		Board	Adj.
F1	SERVO	○	F5	REC PB	○	H2	CUE	○
F2	SYSCON	○	F6	V IN	○	H3	EQ	○
F3	SIF(Option)	----	F7	A PROC	×	H4	RF AMP	○
F4	V OUT	○	F8	ADDA	○	----	HEAD BUFF	×

NOTE: 1. If there is a ROM on P.C.Board, please confirm the software version. Refer to confirmation procedure of software version on previous page.

2. The DATA RAM(IC17) is installed on SYSCON Board and it data can not saved to other equipment.. When SYSCON Board exchanged, remove the IC17 on original Board and put it to New Board. Another way of move the data, write down all of User data, Service data and numerical value of Hour Meter and input the data to new RAM. But numerical value of Hour Meter can not input to VTR (Hour Meter information will be reset).

6. SERVO LED INFORMATION

SERVO LED light on Front Panel, when Cylinder and Capstan Servo are locked. In case of SERVO LED does not light on PLAY or REC condition, please check at LED condition on Servo P.C.Board for confirm the which Servo is faulty.

There are condition LED on the SERVO Board (F1) as follows.

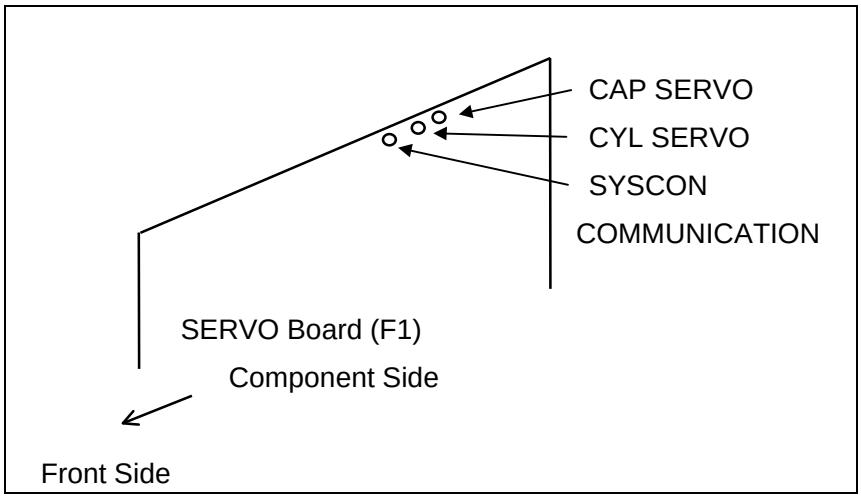

- The LED nearest to front side light up, when Syscon CPU and SERVO CPU communication is correct.
- The center LED light up, when the cylinder servo is locked.
- The LED nearest to the Jack Board light up, when the capstan servo is locked.

Note: In case of capstan servo does not locked, please use function of Tracking mode selection on Service menu for confirm which servo is fault ATF or CTL.

7. Auto Off Error Message

In case of AUTO OFF Error is occurred, AUTO OFF LED light and error message appear on the Front Panel.

The number of below table indicates as priority display of message, when some error occurred at the same time.

No.	Display (20 characters)	Contents	VTR Operation	Detection Place	Reset Condition
1	Normal (EJECT)	After a cassette insertion, if cassette does not down within 6 seconds, VTR goes to EJECT mode.	EJECT	SYSCON	---
	FRONT LOAD MOTOR	After EJECT mode, if a cassette does not up within 6 seconds, [AUTO OFF] LED turns on and the message flashes.	STOP	SYSCON	POWER OFF → ON
2	Normal (EJECT)	Loading is not completed within 6 seconds, VTR goes to EJECT mode (unloading mode).	EJECT	SYSCON	---
	LOADING MOTOR	When unloading is not completed within 6 seconds, [AUTO OFF] LED turns on and message flashes.	STOP	SYSCON	POWER OFF → ON
3	SERVO CONTROL ERROR	If servo CPU does not respond within 1 seconds, [AUTO OFF] LED turns on and message flashes. <Actual Judgment> System control circuit sends COMM_TEST signal to Servo circuit and Servo circuit returns COMM_TEST_RET signal. If this signal is not returned within 1 seconds, “AUTO OFF” process is produced and Servo is reset for 50 ms.	STOP	SYSCON	POWER OFF → ON
4	SERVO ERROR	If only the Servo CPU perform reset operation by momentary power off, “AUTO OFF” occurred.	STOP	SYSCON	POWER OFF → ON

5	SERVO COMM ERROR	If Servo CPU does not response to command from SYSCON CPU during 10 second “AUTO OFF” LED is flashed.	STOP	SYSCON	POWER OFF → ON
6	FRONT LOAD ERROR	If Supply Reel Table rotated over time at Tape big./ end detected operation during Front loading	STOP	SERVO	POWER OFF → ON
7	WIND UP REEL NOT ROTA	When Capstan shaft send the tape 3 cm, Take-up reel FG count number is less than regulation value.	STOP	SERVO	POWER OFF → ON
8	WIND UP ERROR	Compare the tape movement between take up and supply reel, and if the difference is more than 2 cm, goes to “AUTO OFF” mode.	STOP	SERVO	POWER OFF → ON
10	UNLOAD ERROR	Reel does not wind the tape in the unloading mode. Reel FG is counted in each mechanism mode.	STOP	SERVO	POWER OFF → ON
12	S-FF/REW TIME/OVER	Reel operation does not finish at Tape beginning and end position.	STOP	SERVO	POWER OFF → ON
14	DRUM ROTATE TOO SLOW	Cylinder rotary speed is too slow. In the cylinder on mode, cylinder PG interval is more than 1.5 ms for 5 seconds or cylinder PG is not detected for 1 seconds.	STOP	SERVO	POWER OFF → ON
15	DRUM ROTAE TOO FAST	Cylinder rotary speed is too fast. PG interval is less than 3 ms for 2 seconds.	STOP	SERVO	POWER OFF → ON
16	CAP ROTATE TOO SLOW	Capstan rotary speed is too slow. In the capstan on mode, capstan FG is not detected for 5 seconds.	STOP	SERVO	POWER OFF → ON
19	S REEL ROTATE TOO FAST	S-REEL Rotation speed became too high more than 2 seconds.	STOP	SERVO	POWER OFF → ON

22	T-REEL ROTA TOO FAST	T-REEL Rotation speed became too high more than 2 seconds.	STOP	SERVO	POWER OFF → ON
24	T-REEL TORQUE ERROR	In the Reel mode, exceed reel torque, caused by tape run over load, is detected. If the T Reel Torque error voltage is more than 0.5V continuously, goes to Auto Off mode within 105 seconds.	STOP	SERVO	POWER OFF → ON
25	S-REEL TORQUE ERROR	In the Reel mode, exceed reel torque, caused by tape run over load, is detected. If the S Reel Torque error voltage is more than 0.5V continuously, goes to Auto off mode within 105 seconds or Over current flow to Reel Motor more than 0.55A for 2 seconds.	STOP	SERVO	POWER OFF → ON
26	CAP Tension Error	Tension error is detected in capstan mode. Tension sensor voltage (SERVO : TP201) is more than 4.7 V or less than 0.3 V for 2 seconds.	STOP	SERVO	POWER OFF → ON
27	REEL Tension Error	Tension error is detected in Reel mode. Tension sensor voltage (SERVO : TP201) is more than 4.7 V or less than 0.3 V for 2 seconds.	STOP	SERVO	POWER OFF → ON
28	REEL DIR UNMATCH	Take up Reel direction error is detected. Rotation of Take-up reel in opposite direction has continued through complete turn except speed 0 (stop)	STOP	SERVO	POWER OFF → ON

40	DEW	If the condensation has formed inside the VTR, [Auto Off] LED turns on and the message flushes, then VTR goes to Eject mode. <Reset Condition> After the cassette is ejected, Drum rotated to dry out the condensation. When condensation has been removed, message is cleaned and normal operation is enable. NOTE: 1) Drum rotated, when the condensation is detected inside the VTR. 2) If the condensation is detected, when insert the cassette to VTR.	EJECT	SYSCON	AFTER CONDEN-SATION is REMO-VED Refer to CON-TENTS
41	E-FF	The tape beginning and end position are detected simultaneously during loading or after loading completed mode.	STOP	SYSCON	POWER OFF → ON

* Other Operation.

1) If the Reel Base unit does not move to prescribed position within 3 seconds, Reel Motor goes to stop and the cassette is ejected.

8. AUTO OFF Check Point Table

Message	Check Point	
WINDUP_REEL_NOT_ROTA	Check the loosen of the tape before power on. ● S Reel side before capstan motor → S Reel side is abnormal at REV mode. ● T Reel side after capstan motor → T Reel side is abnormal at FWD mode	1. Check the dead point of Reel Motor in the Reel Torque Offset Adjustment mode. (Front Rear SW: 1-1 ON, MENU_SW ON, SET_SW ON) [In case of abnormal condition] ● Check loosen of connector Mech I/F board, Mother board ● Check Servo board Motor Drive circuit (F1 board) TRH ± 1,2,3, SHR ± 1,2,3--- Fig. 1 TRM1,2,3, SRM1,2,3 --Fig. 2 ● Check Reel Motor Replace Reel Motor 2. Check Reel Brake Solenoid (Check the Reel Brake is smoothly released in the Reel Torque Offset Adjustment mode.) [In case of abnormal condition] ● Check loosen of connector Mech I/F board, Mother board ● Check System Control board (F2 board) Solenoid Drive circuit S_BRAKE_N, T_BRAKE_N --- Fig. 3 3. Grease is not attached on the tape pass.

WINDUP_ERROR		1. Check the tension is normal. ● Check Spring power --- Refer to the specification of Tension Regulator Spring Adjustment ● Check Tension Voltage --- Refer to the Tension Voltage Check 1 Refer to the Tension Control Check. 2. Check the FG waveform is normal. Capstan FG --- Refer to Capstan FG Check 1 and Capstan FG Check 2 Reel FG --- Refer to Reel FG Check 1 and Reel FG Check 2 3. Check Reel Offset Torque --- Refer to Motor Torque Offset Adjustment. 4. Check Tape Pass Load 5. Check Tape Damage

UNLOAD_ERROR	Check the tape is surely wound.	1. Check dead point of Reel Motor in the Reel Torque Offset Adjustment mode. (Front Rear SW: 1-1 ON, MENU_SW ON, SET_SW ON) [In case of abnormal condition] ● Check loosen of connector Mech I/F board, Mother board Check Motor Drive circuit (F1 board) TRH ± 1,2,3, SHR ± 1,2,3--- Fig. 1 TRM1,2,3, SRM1,2,3 --Fig. 2 ● Check Reel Motor Replace Reel Motor. 2. Check Reel Torque Offset [In case of abnormal condition] Re-adjustment --- Motor Torque Offset Adjustment 3. Check Reel Brake Solenoid (Check the Reel Brake is smoothly released in the Reel Torque Offset Adjustment mode.) [In case of abnormal condition] ● Check loosen of connector Mech I/F board, Mother board ● Check System Control board (F2 board) Solenoid Drive circuit S_BRAKE_N, T_BRAKE_N --- Fig. 3 4. Check Reel FG Reel FG --- Refer to Reel FG Check 1 and Reel FG Check 2

S_FF/REW_TIMEOVER	Check the problem occurred at tape beginning or tape, or other portion.	1. Check Reel FG Reel FG --- Refer to Reel FG Check 1 and Reel FG Check 2 [In case of abnormal condition] ● Check loosen of connector Mech I/F board, Mother board ● Reel FG Sensor, Reel Replacement ● Check F1 board. 2. Check transparent tape detection. [In case of abnormal condition] ● Check loosen of connector Mech I/F board, Mother board ● Replace sensors. ● Check F2 board. 3. Check the tape is not bent.
S_REEL_ROTA_TOO_FAST		1. Check Reel FG waveform. Reel FG --- Refer to Reel FG Check 1 and Reel FG Check 2 [In case of abnormal condition] ● Check loosen of connector Mech I/F board, Mother board ● Reel FG Sensor, Reel Replacement ● Check F1 board. 2. Check Reel Drive circuit. TP450 and TP451 on F1 board --- less than 0.4 V

T_REEL_ROTA_TOO_FAST		1. Check Reel FG waveform. Reel FG --- Refer to Reel FG Check 1 and Reel FG Check 2 [In case of abnormal condition] ● Check loosen of connector Mech I/F board, Mother board ● Reel FG Sensor, Reel Replacement ● Check F1 board. 2. Check Reel Drive circuit. TP450 and TP451 on F1 board --- less than 0.4 V
T_REEL_TORQUE_ERROR		1. Check Reel Torque Offset [In case of abnormal condition] Re-adjustment --- Motor Torque Offset Adjustment 2. Check Reel Brake Solenoid (Check the Reel Brake is smoothly released in the Reel Torque Offset Adjustment mode.) [In case of abnormal condition] ● Check loosen of connector Mech I/F board, Mother board ● Check System Control board (F2 board) Solenoid Drive circuit S_BRAKE_N, T_BRAKE_N --- Fig. 3

S_REEL_TORQUE_ERROR		1. Check Reel Torque Offset [In case of abnormal condition] Re-adjustment --- Motor Torque Offset Adjustment 2. Check Reel Brake Solenoid (Check the Reel Brake is smoothly released in the Reel Torque Offset Adjustment mode.) [In case of abnormal condition] ● Check loosen of connector Mech I/F board, Mother board ● Check System Control board (F2 board) Solenoid Drive circuit S_BRAKE_N, T_BRAKE_N --- Fig. 3
DRUM_ROTATE_TOO_FAST		Check Cylinder PG Check Cylinder FG [In case of fast rotation] ● Check Cylinder flexible cable, connectors. ● Check CYL_ERR (TP400) voltage. Normal Rotation : TP400 = about 2.5 V During Full Acceleration : TP400 = 0 V EJECT mode : TP400 = 2.5 V Servo REF (IC207-2 pin) = about 2.5 V fix If above voltage is incorrect, servo board is not correct. [In case of FG is correct and PG is incorrect] PG signal flow is incorrect. (Cylinder >> Mech I/F >> Mother >> Servo)

DRUM_ROTATE_TOO_SLOW	Check that the tape is stick with the Cylinder. Check that the tape is stick with a part of the tape pass and it causes the high tension. In this case tape may brake the Cylinder rotation.	Check Cylinder PG Check Cylinder FG [In case of FG is correct and PG is incorrect] PG signal flow is incorrect. (Cylinder >> Mech I/F >> Mother >> Servo) [In case of both PG and FG are incorrect (Cylinder rotation is actually slow.)] (1) Check Cylinder Unit. Rotate the Cylinder in EJECT or UNLOAD condition. Check that the Cylinder smoothly rotate. If it is not smooth, the Cylinder unit is incorrect. (2) Check the rotary speed detection. Check that the CYL_FG_PRE (TP231) shows the pulse which is 4 pulses per rotation and the duty is 50 %, 0V/5V. If it is incorrect, FG signal flow is incorrect. (3) Check the Servo CPU outputs acceleration command. ● Check that acceleration voltage (less than 2.5 V) is output at CYL_ERR (TP400). ● Check that drive on signal which is 5 V at IC400-4 pin. when it is 2.5 V, it is OFF mode. (4) Check the Reference voltage. Check that SERVO_REF (IC207-2 pin) voltage is about 2.5 V. -→ If (3) or (4) is incorrect, surround circuit of CPU, D/A is incorrect. (5) Check that Power Supply voltage. Check that Drive IC voltage (VCC 5V : IC400-27 pin) and Motor Drive voltage CYL_VM (Q400 -1 or 8 pin). The VM is positive voltage during Cylinder ON. → If it is correct, between Motor Drive and Cylinder is incorrect. Check connectors of Cylinder, Mech I/F and Mother.

CAP_ROTATE_TOO_SLOW	Check the tape is not stacked with the tape pass and tension is not high. Check the mechanical load of Capstan.	Refer to Capstan FG check (1) and (2). ● In case of the Capstan Motor overrunning even the message is too slow. The FG signal which is used to detect capstan speed is not supplied to the SERVO CPU. Check the frequency at CAP_FG1,2 (TP80, 82) is correspond with the rotary speed. (about 1.58 kHz, 0/5 V in REC/PB mode). Check the connectors of Capstan, Mech I/F and Mother. ● In case of Capstan does not rotate. (1) Check the Servo CPU supplies the acceleration command. Check the SERVO_REF (IC207-2 pin) is about 2.5V. Check the CAP_ERR (TP401) is acceleration command. It is below than SERVO_REF voltage. If the capstan does not rotate, the CAP_ERR voltage should be 0 V. Check Drive ON signal (IC401 - 4 pin) i s 5 V (rev) and 0 V (fwd), 2.5 V (OFF). (2) Check the Power Supply voltage. Check the Drive IC power voltage (VCC 5V : IC401 - 27 pin). Check Motor Drive voltage CAP_VM (Q402 - 1 or 8 pin). (3) Check the Drive signal is supplied to Capstan motor. Check the connectors of Capstan, Mech I/F and Mother. If above conditions are correct, motor or drive circuit is incorrect.

Fig 1 REEL Position Detect	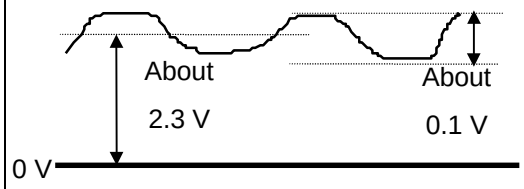	Rotate the REEL motor in EJECT mode and check the following waveform. F1 board P2 - 10a TRH1+ 10b TRH1- 10c TRH2+ 11a TRH2- 11b TRH3+ 11c TRH3- 12c SRH1+ 13a SRH1- 13b SRH2+ 13c SRH2- 14a SRH3+ 14b SRH3-
Fig2 REEL Drive Waveform	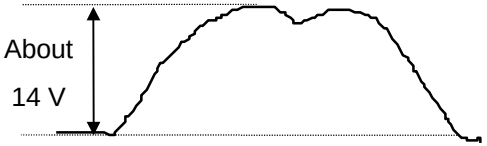	Set Front Rear SW 1-1 ON. Select T or S_REEL_TRQ on the MENU, and rotate the REEL and confirm the following waveform is like Fig. 2. F1 board P2-23b TRM3 23c TRM1 24c TRM2 25b SRM3 25c SRM1 26c SRM2

Fig. 3 Brake Solenoid	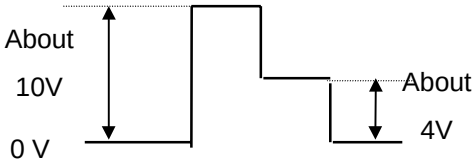	Set Front Rear SW 1-1 ON. Select T or S_REEL_TRQ on the MENU, and check the waveform like Fig. 3 appears at following positions at Brake is released. ● T_REEL_TRQ selection F2 board P2 -25C T_BRAKE_N ● S_REEL_TRQ selection F2 board P2 -23C S_BRAKE_N

SECTION 3

MAINTENANCE/DISASSEMBLY PROCEDURES & MECHANICAL ADJUSTMENT

CONTENTS

1. MAINTENANCE 3-1
1-1. MAINTENANCE PART CHART 3-1
1-2. SENSORS LAYOUT 3-2
1-3. SERVICING FIXTURES & TOOLS 3-3
1-4. CIRCUIT BOARD LOCATION 3-6
1-5. ALIGNMENT TAPE 3-7
1-6. RECOMMENDED TEST AND SERVICE EQUIPMENT 3-8
2. DISASSEMBLY METHOD 3-9
2-1. REMOVAL OF TOP PANEL 3-9
2-2. REMOVAL OF BOTTOM PANEL 3-9
2-3. REMOVAL OF UPPER FRONT PANEL 3-9
2-4. REMOVAL OF FRONT PANEL 3-9
2-5. REMOVAL OF FRONT LOADING UNIT 3-10
2-6. REMOVAL OF POWER SUPPLY UNIT 3-10
2-7. REMOVAL OF CYLINDER UNIT 3-10
2-8. REMOVAL OF MECHANISM UNIT 3-10
2-9. REMOVAL OF FUN MOTOR UNIT 3-12
3. MANUAL TAPE EJECT 3-13
4. CLEANING PROCEDURES 3-14
4-1. CLEANING OF HEAD CHIPS: (DAILY) 3-14
4-2. CLEANING OF DRUM LEAD: (WEEKLY) 3-14
4-3. CLEANING OF A/C HEAD: (WEEKLY) 3-14
4-4. CLEANING OF PINCH ROLLER AND CAPSTAN: (WEEKLY) 3-14
4-5. CLEANING OF POST: (WEEKLY) 3-14
5. MECHANICAL ADJUSTMENT 3-15
5-1. NAME OF TAPE TRANSPORTATION 3-15
5-2. PINCH SOLENOID POSITION ADJUSTMENT 3-16
5-3. MAIN BRAKE TORQUE CONFIRMATION 3-17
5-4. POST HEIGHT PRE-ADJUSTMENT 3-18
5-5. TENSION ADJUSTMENT FLOWCHART 3-19
5-6. TENSION OFFSET ADJUSTMENT 3-20
5-7. TENSION ARM NEUTRAL POSITION ADJUSTMENT 3-21
5-8. TENSION ARM PLAY AND REV VOLTAGE ADJUSTMENT 3-22
5-9. TENSION REGULATOR SPRING ADJUSTMENT 3-23
5-10. REV TENSION CONFIRMATION 3-24
5-11. TENSION CONFIRMATION 3-25
5-12. TAPE PASS ADJUSTMENT PROCEDURE 3-26
5-13. ENVELOPE WAVEFORM ADJUSTMENT 3-27
5-14. POST LIMIT CONFIRMATION (PLAY) 3-28
5-15. A/C HEAD ADJUSTMENT METHOD 3-29
5-16. A/C HEAD TILT ADJUSTMENT 3-30

5-17. A/C HEAD HEIGHT ADJUSTMENT 3-31
5-18. A/C HEAD AZIMUTH ADJUSTMENT 3-32
5-19. A/C HEAD TILT CONFIRMATION 3-33
5-20. A/C HEAD HEIGHT CONFIRMATION 3-34
5-21. A/C HEAD AZIMUTH AND X-VALUE ADJUSTMENT 3-35
5-22. REV TAPE PASS CONFIRMATION AND ADJUSTMENT (T4 POST HEIGHT ADJUSTMENT) 3-36
5-23. CTL SELF RECORDING LEVEL CONFIRMATION 3-37
5-24. PLAY TAPE PASS LIMIT CONFIRMATION 3-38
5-25. CONFIRMATION OF ENVELOPE ON REV, REW AND FF MODE 3-39
5-26. CONFIRMATION OF PLAY START ENVELOPE 3-40
5-27. TAPE PASS LIMIT CONFIRMATION 3-41
5-28. FF, REW TAPE PASS LIMIT CONFIRMATION 3-42
5-29. SCREW LOCK TIGHT OF A/C HEAD AND T3, T4 POST 3-43
5-30. PG SHIFTER ADJUSTMENT 3-44
5-31. LISTA ADJUSTMENT PROCEDURE 3-45
5-32. LISTA CONNECTION AND BOOT UP 3-46
5-33. LISTA SENSITIVITY ADJUSTMENT (R/P HEAD) 3-48
5-34. LISTA SENSITIVITY DETECTION (RP HEAD) 3-49
5-35. LISTA LINEARITY ADJUSTMENT AND WAVING MEASUREMENT 3-50
5-36. LISTA SENSITIVITY ADJUSTMENT (PB HEAD) 3-52
5-37. LISTA SENSITIVITY ADJUSTMENT (DV COMPATIBILITY) 3-53
5-38. SELF-RECORDING PLAYBACK ENVELOPE WAVEFORM CONFIRMATION 3-54
6. MECHANICAL PARTS REPLACEMENT AND ADJUSTMENT PROCEDURES 3-55
6-1. CYLINDER UNIT REPLACEMENT 3-55
6-1-2. CLEANING ARM UNIT REPLACEMENT 3-56
6-1-3. T1 GUIDE POSITION ADJUSTMENT 3-56
6-1-4. ADJUSTMENT FLOW CHART AFTER CYLINDER UNIT REPLACEMENT 3-57
6-2. A/C HEAD REPLACEMENT 3-58
6-2-1. REPLACEMENT 3-58
6-2-2. ADJUSTMENT FLOWCHART AFTER A/C HEAD REPLACEMENT 3-59
6-3. SUPPLY REEL ROTOR UNIT AND TAKE UP REEL ROTOR UNIT REPLACEMENT 3-60
6-4. SUPPLY AND TAKE UP BRAKE ARM UNIT REPLACEMENT 3-62
6-5. SUPPLY BRAKE SOLENOID REPLACEMENT AND ADJUSTMENT 3-62
6-6. TAKE UP BRAKE SOLENOID REPLACEMENT AND ADJUSTMENT 3-63
6-7. PINCH SOLENOID REPLACEMENT 3-64
6-8. PINCH ARM UNIT REPLACEMENT 3-64
6-9. LOADING MOTOR UNIT REPLACEMENT 3-65
6-10. MODE SELECT SWITCH UNIT REPLACEMENT 3-65
6-11. MAIN CAM GEAR REPLACEMENT 3-66
6-12. S5 POST BASE UNIT REPLACEMENT 3-67
6-13. TENSION ARM UNIT REPLACEMENT 3-67
6-14. S1 POST LOADING ARM UNIT REPLACEMENT AND ADJUSTMENT 3-68
6-15. T1 BOAT UNIT REPLACEMENT 3-69
6-16. T1 LOADING ARM UNIT REPLACEMENT AND ADJUSTMENT 3-69
6-17. CLEANER SOLENOID REPLACEMENT AND ADJUSTMENT 3-69
6-17-1. CLEANER SOLENOID POSITION ADJUSTMENT 3-70
6-17-2. CLEANER ROLLER POSITION ADJUSTMENT 3-71
6-18. M-STOPPER SOLENOID REPLACEMENT AND ADJUSTMENT 3-71
6-19. DISTINCTION SW UNIT REPLACEMENT 3-72
6-20. REEL DRIVE MOTOR UNIT REPLACEMENT 3-72
6-21. L-M RELEASE ANGLE UNIT REPLACEMENT 3-73
6-22. SLIDE ROD UNIT REPLACEMENT AND ADJUSTMENT 3-73
6-23. T4 POST PHASE ADJUSTMENT 3-74
6-24. THRUST ADJUSTMENT SCREW REPLACEMENT AND ADJUSTMENT 3-75

1. Maintenance

1-1.Maintenance Part Chart

No	Name	Part Number	Part Using Hours (Unit hours)					
			2,000	4,000	6,000	8,000	10,000	12,000
.	Tape Path Cleaning		ΔClean the Tape Path at each 500 hours					
1	Cylinder Unit	VEG1337	●	●	●	●	●	⊙
2	Cleaning Arm Unit	VXL2748	●	●	●	●	●	⊙
3	Pinch Arm Unit	VXL2835		●■		●■		⊙
4	S Reel Motor Unit	VEM0686			●			⊙
5	T Reel Motor Unit	VEM0687			●			⊙
6	Thrust Screw Unit	VXQ0556			●⩓			⊙
7	Front Loading Unit	VXA6070						●
8	Mech. Chassis Unit	VXY1431Z1						●
9	Fan Motor	VRF0190	Replace the Fan Motor at each 10,000 hours ***Operation Time***					

Note: Using hours are based on the head rotation hours.

Using hours are recommendation. It may depended on temperature, humidity or dusty.

Using hours are listed as the reference of maintenance. They do not mean guarantee Hours.

Symbol	Maintenance	Remark
●	Replacement	
⊙	Replacement	These parts are included in Mech Chassis Unit
■	Greasing	Wipe the old grease and apply new grease
Δ	Cleaning	This mark means cleaning is necessary
⩓	Lubrication	The lubrication is necessary

1-2. Sensors Layout

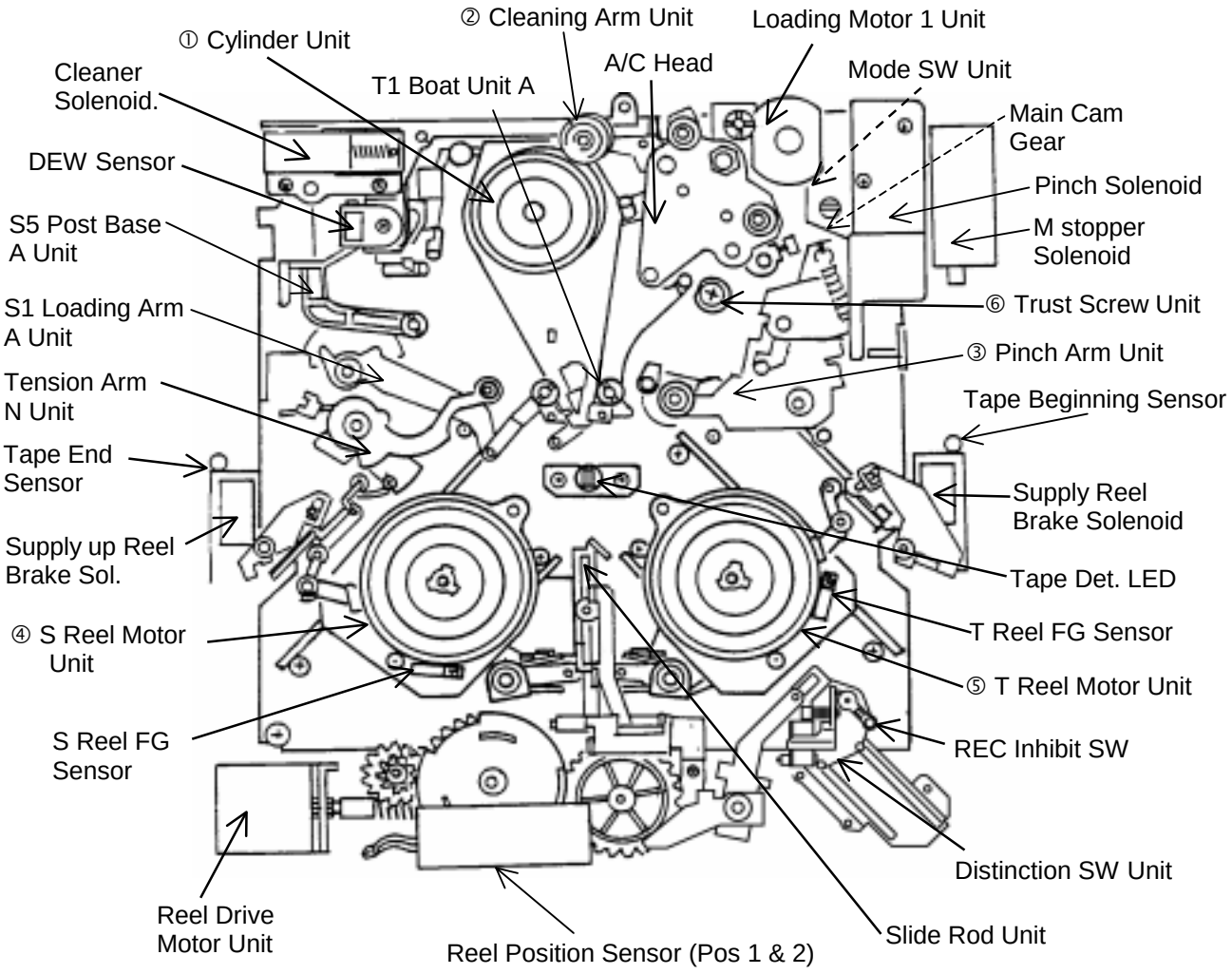

1-3. Servicing Fixtures & Tools

No.	Part No.	Name	AJ-D850	Remark
1	VFK1145	Back Tension Meter (T2-M30-P)	○	
2	VFK1149	Post Driver	○	
3	VFK71	Dial Torque Gauge (150 g)	○	
4	VFK1191	Dial Torque Gauge (45g)	○	
5	VFK1152	Dial Torque Gauge Adapter	○	
6	VFK0357	Eccentric Screwdriver (1.5)	○	
7	VFK1154	Post Height Fixture	○	
8	VFK1153	Mech. Neutral Plate(Post)	○	
9	VFK0906	Oil	○	
10	VFK1155	REV Position Tool (Silver color)	○	
11	VFK1156	PLAY Position Tool (Black color)	○	
12	VFK1208	Neutral Position tool (Black with hole)	○	
13	VFK1150	Nut Driver (5.5mm)	○	
14	VFK1151	Nut Driver (2.5mm)	○	
15	VFK1188	Dial Tension Gauge (30g)	○	
16	VFK0948A	Check Light	○	
17	VFK0749	Froiral Grease (White: for plastic part)	○	
18	M0R265	Morlytone Grease (Black: for metal part)	○	
19	VFK1146	Philips Driver (00-75)	○	
20	VFK1147	Philips Driver (00-100)	○	
21	VFK1148	Hex. Driver (1.5mm)	○	
22	VFK1178	Hex. Driver (0.89mm)	○	
23	VFK1179	Hex. Driver (0.71mm)	○	
24	VFK1190	Hex. Wrench (1.5mm)	○	
25	VFK1209	Torque Driver(0.4-3Kg)	○	
26	VFK1375	Post Axis Driver(1.5mm)	○	or VFK0912
27	VFK1300	A/D Converter Board (DAQ-12 Quatech)	○	Purchase Locally
28	VFM3580KM	Alignment Tape (No.1)	○	for NTSC
29	VFM3581KM	Alignment Tape (No.2)	○	for NTSC
30	VFM3582KM	Alignment Tape (No.3)	○	
31	VFM3680KM	Alignment Tape (No.1)	○	for PAL
32	VFM3681KM	Alignment Tape (No.2)	○	for PAL
33	VFM3682KM	Alignment Tape (No.3)	○	for PAL
34	VFM3000EDS	Alignment Tape (DV LISTA)	○	
35	VFM3010EDS	Alignment Tape (DV Color Bar)	○	for NTSC
36	VFM3010EDS	Alignment Tape (DV Colour Bar)	○	for PAL
37	AJ-CL12MP	Cleaning Tape	○	
38	VFK1192	Extension Board (F)	○	
39	VFK1193	Extension Board (H)	○	
40	VFK1481	LISTA Software	○	
41	VFK1186	LISTA Cable	○	
42	VFK1160C	RF Adjustment Software	○	
43	VFK1163	RF Adjustment Tape	○	
44	VFK1423	Tape Det. Sensor Cassette	○	
45	VZZ0095	Cleaning Cross	○	
46	VFK0369	Tweezers	○	
47	VFK0371	Radio Prier	○	
48	VFK0372	Cutter Prier	○	
49	VFK0338	Trimmer Adjustment Driver	○	
50	VFK0337	Philips Driver	○	

1 VFK1145 Back Tension Meter 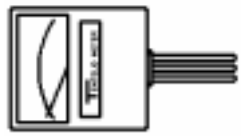 Model:T2-M30-P	2 VFK1149 Post Driver 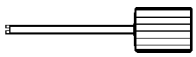	3 VFK71 (150g) 4 VFK1191(45g) Dial Torque Gauge 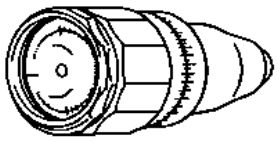	5 VFK1152 Dial Torque Gauge Adapter
6 VFK0357(ø1.5) Eccentric Screwdriver 	7 VFK1154 Post Height Fixture 	8 VFK1153 Mech Neutral Plate(Post) 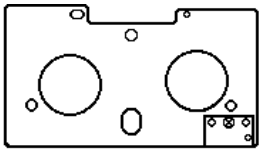	9 VFK0906 OIL (for Thrust Adjustment screw)
10 VFK1155 (REV, Silver) 11 VFK1156 (PLAY, Black) 12 VFK1208(Neutral,Black With hole) 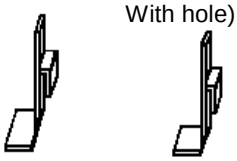 (Gold) (Black)	13 VFK1150 Nut Driver(5.5mm) 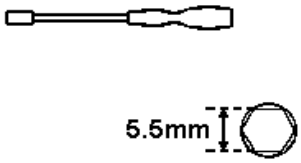 5.5mm	14 VFK1151 Nut Driver(2.5mm) 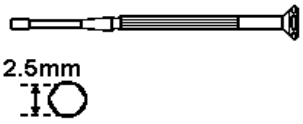 2.5mm	15 VFK1188(30g) Dial Tension Gauge 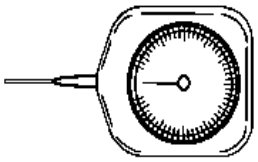
16 VFK0948A(or purchase locally) Check Light 	17 VFK0749 Froiral Grease(White) (for plastic part) 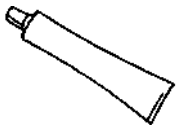	18 MOR265 Morlytone Grease(Black) (for metal part) 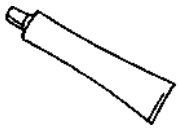	19 VFK1146 (00 x 75) 20 VFK1147 (00 x 100) Philips Driver 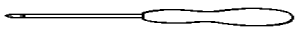
21 VFK1148(1.5mm) 22 VFK1178(0.89mm) 23 VFK1179(0.71mm) Hex. Driver 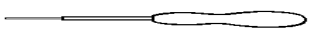	24 VFK1190 (1.5mm) Hex. Wrench 	25 VFK1209 Torque Driver(0.4-3Kg) 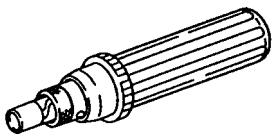	26 VFK1375 or VFK0912 Post Axis Driver(1.5mm) 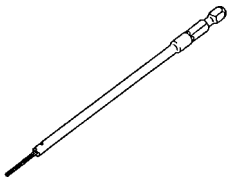

27 VFK1300
A/D Converter Board
(For Quatech. DAQ-12
Purchase Locally)

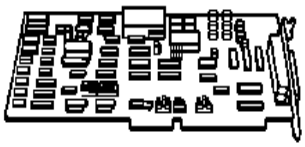

28 VFM3580KM
29 VFM3581KM
30 VFM3582KM
DVC PRO Alignment Tape
(for NTSC)

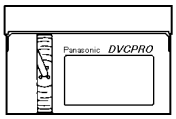

31 VFM3680KM
32 VFM3681KM
33 VFM3682KM
DVC PRO Alignment Tape
(for PAL)

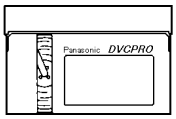

34 VFM3000EDS
DV Alignment Tape
(LISTA)

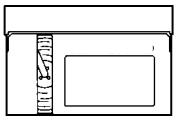

35 VFM3010EDS
DV Alignment Tape
(Color Bar)
(for NTSC)

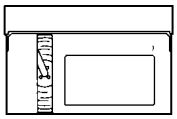

36 VFM3110EDS
DV Alignment Tape
(Colour Bar)
(for PAL)

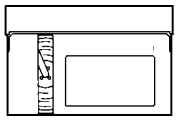

37 AJ-CL12MP
Cleaning Tape

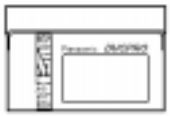

38 VFK1192 --- (F)
39 VFK1193 --- (H)
Extension Board

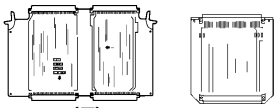

(F) (H)
Common for AJ-D750

40 VFK1481
LISTA Software
41 VFK1186
LISTA Cable

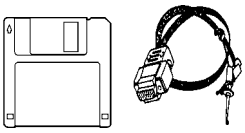

42 VFK1160C
RF Adjustment Soft

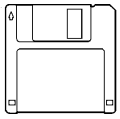

43 VFK1163
RF Adjustment Tool

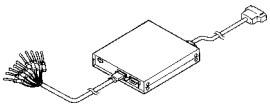

44 VFK1423
Tape Sensor
Cassette (M Cassette)

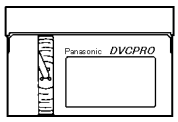

45 VZZ0095
Cleaning Cross

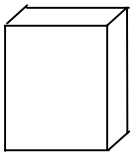

46 VFK0369
Tweezers

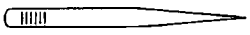

47 VFK0371
Radio Prier

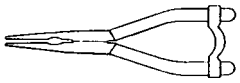

48 VFK0372
Cuntter Prier

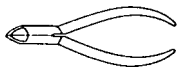

49 VFK0338
Trimmer Adjustment Driver

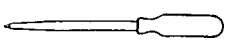

50 VFK0377
Philips Driver

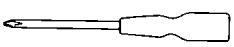

1-4. CIRCUIT BOARD LOCATION

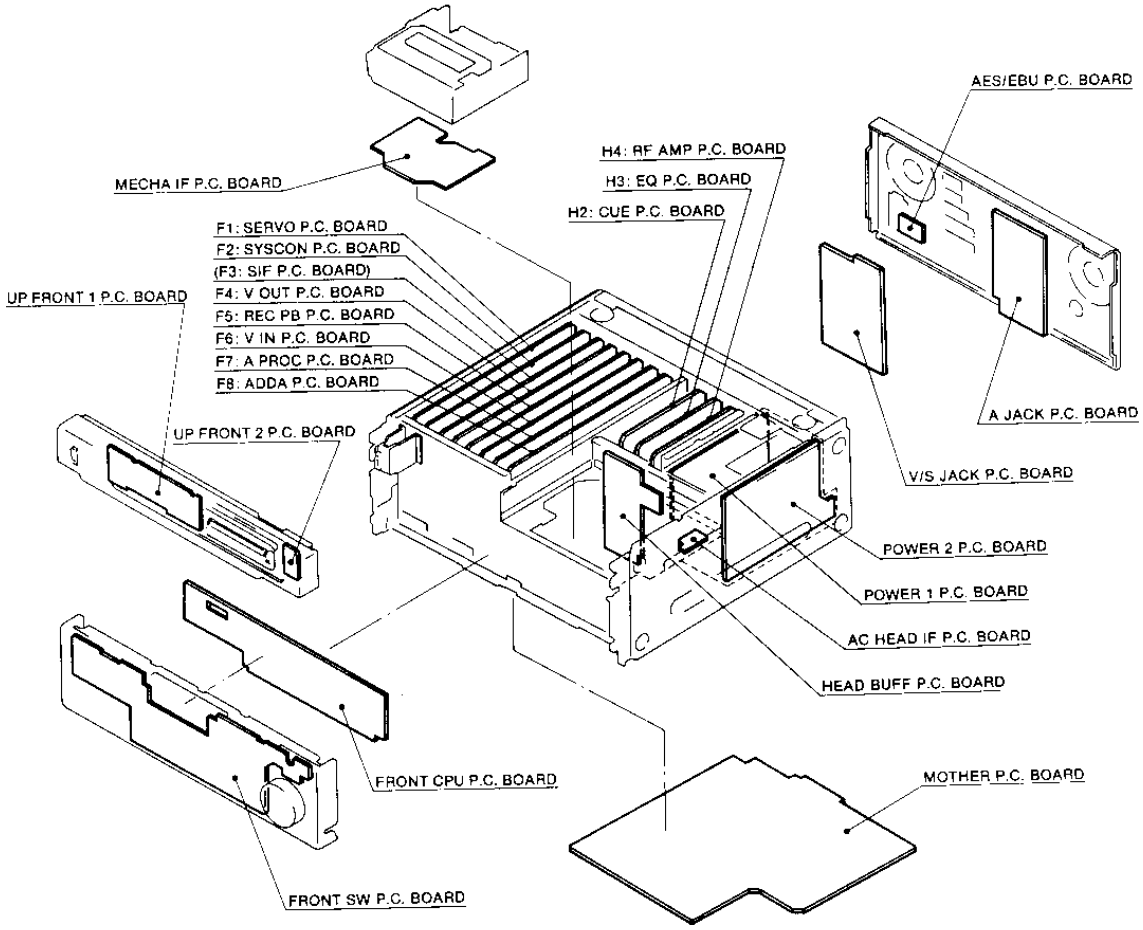

1-5. Alignment Tapes

DVCPRO Alignment Tape

VFM3580KM(NTSC)

Time	Video		PCM		CUE	
(min)	Signal	Purpose	Signal	Purpose	Signal	Purpose
0:00	Color Bar SMPTE(75%)	Composite Video Level Confirmation	1kHz - 20dB	Audio Level Confirmation	1kHz 0VU	CUE Level Confirmation
7:00	Color Bar Full Field(75%)	Component Video Level Confirmation				
14:00	H Sweep	Frequency Response			6kHz 0VU	A/C Head Azimuth
18:00	Bowtie(500k)	Y/C Timing				
22:00	Pulse&Bar	Y/C Timing			-10dB, 1kHz	Frequency
26:00 30:00	Area Markers				50Hz ~ 15kHz	Response

VFM3581KM(NTSC)

Time(min)	Signal
0:00~20:00	ITI Pattern

VFM3582KM(NTSC)

Time(min)	Signal
0:00~10:00	X Value

VFM3680KM (PAL)

Time	Video		PCM		CUE	
(min)	Signal	Purpose	Signal	Purpose	Signal	Purpose
0:00	Color Bar 100%	Video Level Confirmation	1kHz -18dBu	Audio Level Confirmation	1kHz Reference level	CUE Level Confirmation
10:00	H Sweep	Frequency Response				
14:00	Area Markers				6kHz Reference level	A/C Head Azimuth
18:00	Bowtie(500k)	Y/C Timing				
22:00	Pulse & Bar	Y/C Timing			1kHz 300Hz~6kHz	Frequency Response
26:00 30:00	Multi Pulse	Y/C Timing				

VFM3681KM (PAL)

Time (min)	Signal
0:00 ~ 20:00	ITI Pattern

VFM3682KM (PAL)

Time (min)	Signal
0:00 ~ 10:00	X Value

1-6. Recommended Test And Service Equipment

NTSC

Part No.	Name	Remark
TSG130A(OP.04)	Analog Component Signal Generator	TEKTRONIX
	Oscilloscope	
1750,1760(OP.SC) or 1780R	WFM Monitor	TEKTRONIX
	Digital Volt Meter	
	Frequency Counter	
	VTVM	Frequency Band Width 4Hz-500KHz
	Audio Analyzer	

PAL

Part No.	Name	Remark
TSG131A(OP.04)	Analog Component Signal Generator	TEKTRONIX
	Oscilloscope	
1751,1761(OP.SC) or 1781R	WFM Monitor	TEKTRONIX
	Digital Volt Meter	
	Frequency Counter	
	VTVM	Frequency Band Width 4Hz-500KHz
	Audio Analyzer	

2. Disassembly Method

2-1. Removal of Top Panel

1. Loosen the two screws on the top panel.

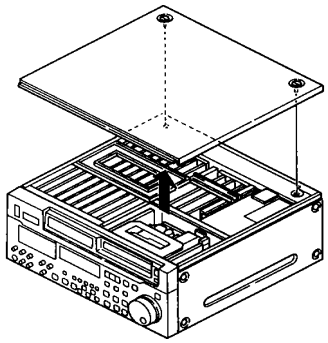

2-2. Removal of Bottom Panel

1. Unscrew the 4 screws (A) and loosen the screw (B).
2. Slide the bottom panel to front direction and remove the bottom panel.

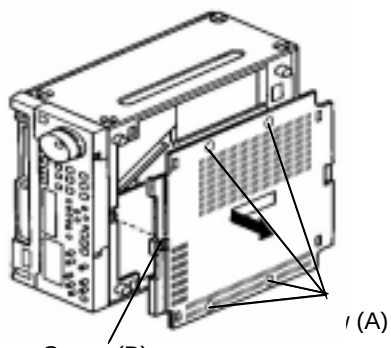

2-3. Removal of Upper Front Panel

1. Draw up the Front Panel and unscrew the 6 screws.
2. Remove the Upper Front Panel and disconnect the one connector.

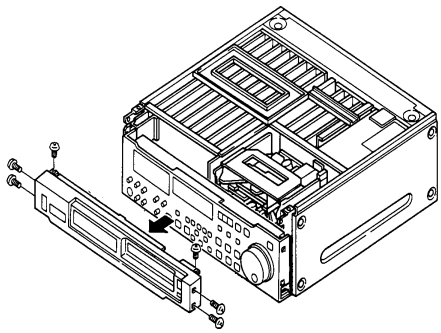

Note: **After installation of Upper Front Panel, confirm that the Blinder Panel is moved up and down smoothly by hand. If not, the Blinder Panel is caught by Blind Panel Opener.**

2-4. Removal of Front Panel

1. Remove the Upper Front Panel.
2. Draw up the Front Panel and unscrew the 4 screws and disconnect one connector, then remove the Front Panel.

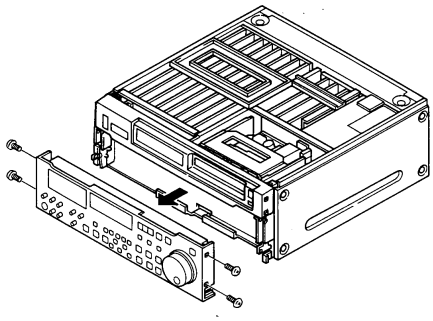

2-5. Removal of Front Loading Unit

1. Move the Cassette Holder until the 2 screws (A) can be removal position.

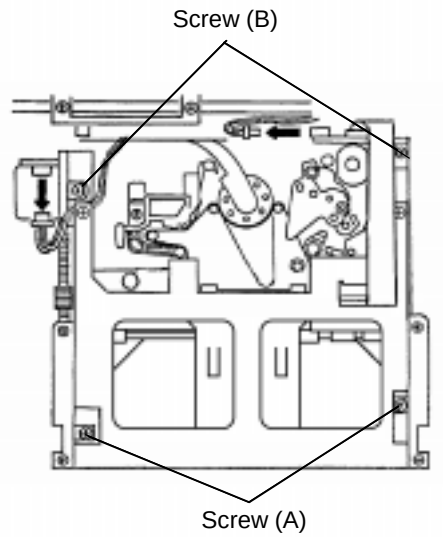

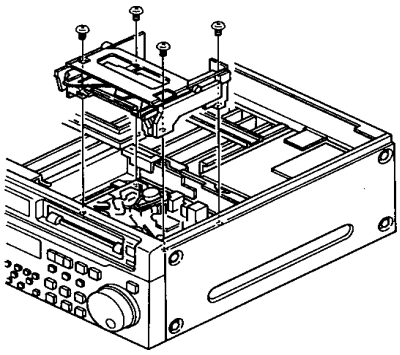

2. Disconnect 2 connectors at Front Loading motor part and the mechanism interconnection board.
3. Unscrew the 4 screws (A) and (B), then remove the Front Loading Unit.

2-6. Removal of Power Supply unit

1. Remove the Bottom Panel.
2. Disconnect the 5 connectors with the Power Supply unit at the VTR bottom side.
3. Unscrew the 2 screws with the Power Supply unit at the VTR bottom side.

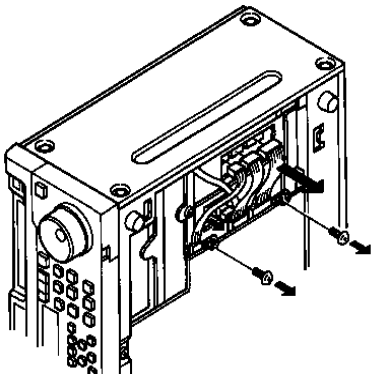

4. Unscrew one screw with the Power Supply unit on the VTR top side.

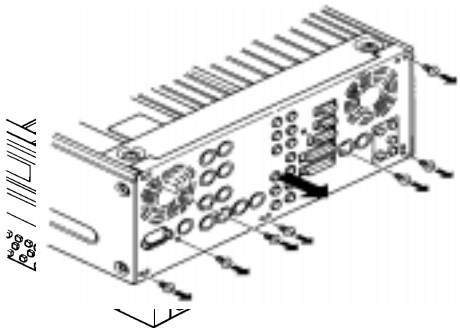

5. Unscrew the 7 screws and remove the Rear Jack Panel.

6. Unscrew the 2 screws with the Power Supply unit at the VTR rear side, then Power Supply Unit can be removal..

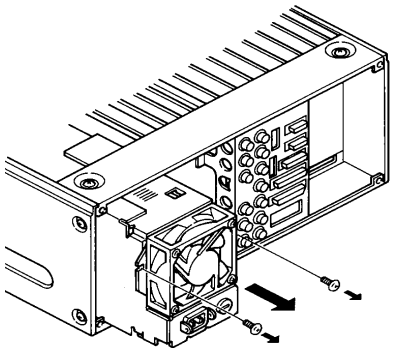

2-7. Removal of Cylinder Unit

1. Remove the Bottom Panel
2. Disconnect the connector P33 on the Mech. I/F Board. And remove the 3 screws which have spring from the cylinder unit..

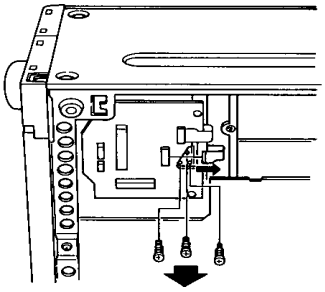

3. Remove the one screw which is fixed with the flexible cable, it attached Cylinder Unit..
4. Disconnect the connector P5002 and P5003 on the Head Buffer Board, then remove the cylinder unit without touching any mechanism parts.
   - Assemble procedures are reverse of the disassembly method.

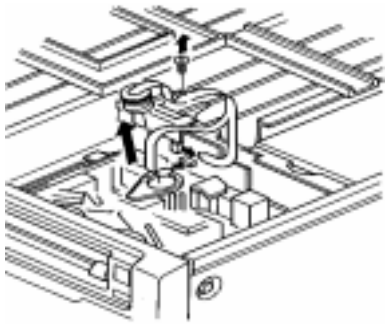

2-8. Removal of Mechanism Unit

1. Remove the Front Loading unit.
2. Remove the Bottom Panel.
3. Disconnect the connector P1 and P2 on the Mech. I/F Board.
4. Disconnect the connector P1 on A/C Head I/F Board for remove the A/C Head cable.

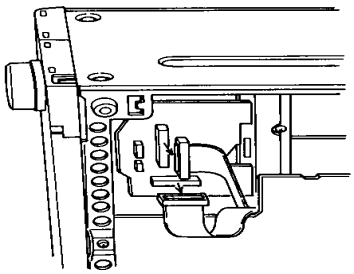

5. Disconnect the connector P5002 and P5003 on the Head Buffer board.
6. Unscrew the 3 screws and remove the mechanism unit.

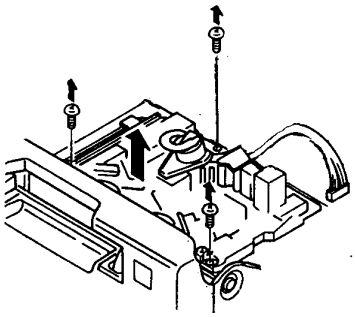

2-9. Removal of Fun Motor Unit

1. Unscrew the 7 screws and remove the Rear Jack Panel.

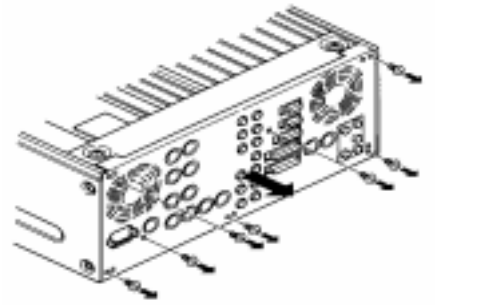

2. Unscrew the 2 screws and disconnect the connector P14 on the Power 2 P.C.B. ,then remove the Fan Motor as shown as below figure.

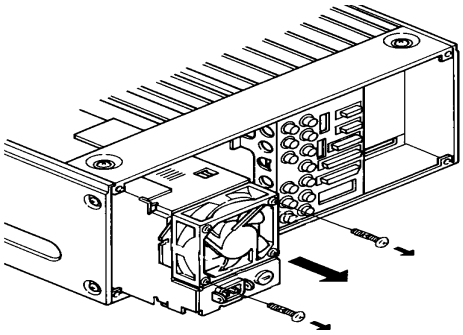

3. Unscrew the 2 screws and disconnect the connector P32 on Mother P.C.B. ,then remove the Fan Motor as shown as below figure.

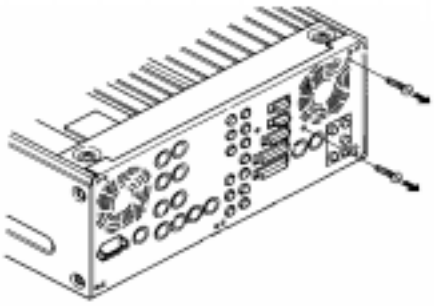

3. Manual Tape Eject

When a tape can not be ejected, because of Power failure or mechanical tape damage, remove the tape manually.

1. Turns power off and remove the top Case Unit.
2. Rotate the red plastic screw by a Phillips - head screwdriver counterclockwise pushing the screw. It needs to rotate about 30 times rotation until starting to move.
3. Since tape slack will develop when the post is unloaded, wind up the supply reel to take up the slack.

   How to take up the slack (see ③)

   a. Insert the rubber side of the take-up jig into the cassette tape withdrawal opening on the VTR's mechanism side.

   b. Turn the flange part of the supply reel in the direction of take-up to take up the tape slack. (Take care not to damage the tape in the process.)

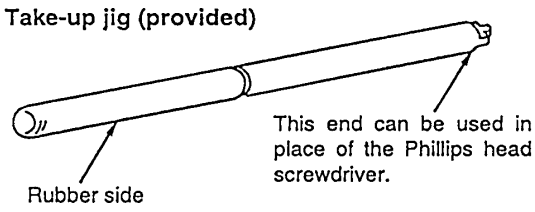

4. Repeat item 2 and 3 until the tape in wound Completely inside of the cassette.
5. When the tape is completely inside of the cassette, rotate the red screw in front of the worm gear of the cassette down motor clockwise by a Philips-head screwdriver pusing the screw and remove the cassette cover does not bite the tape when the cover is closed.

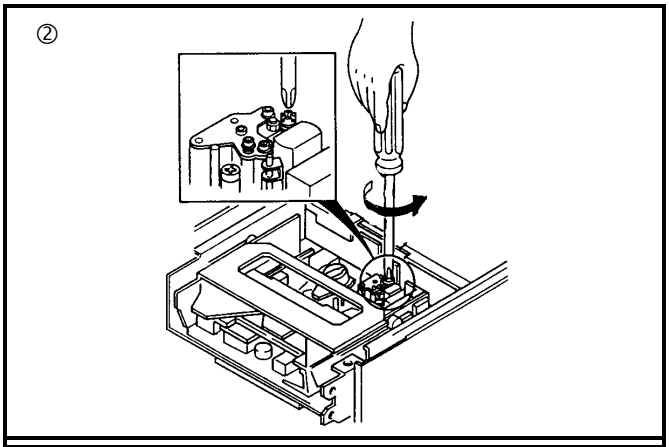

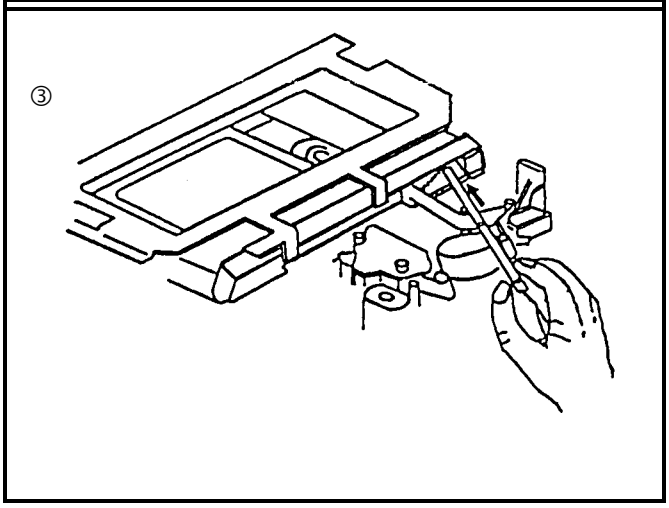

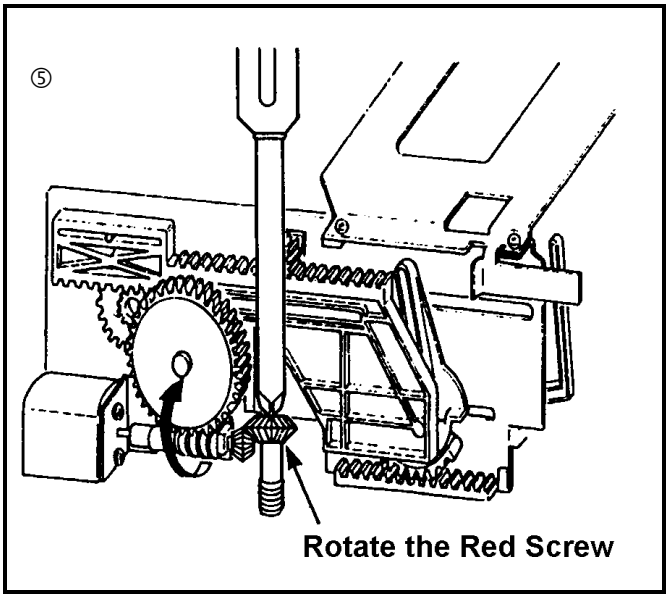

4. Cleaning Procedures

Note: Turns power off during cleaning.

Make sure the power is OFF before cleaning. Use ethanol(more than 99% purity) as cleaning liquid.

4-1 Cleaning of Head Chips: (Daily)

Clean heads by applying even pressure and rotating cylinder a few times. Never wipe in up and down motion. Never touch a cylinder by naked hand. First wipe with a cloth soaked by cleaning liquid. Then wipe with dry cloth.

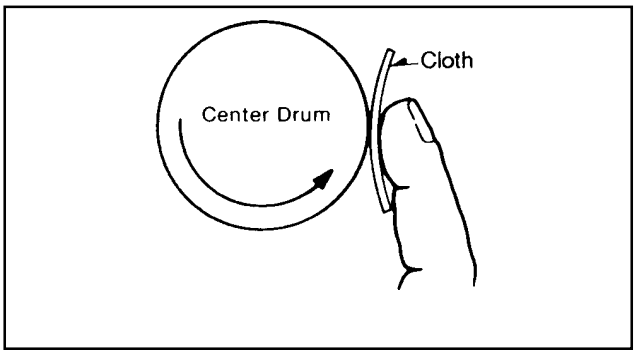

4-2. Cleaning of Drum Lead: (Weekly)

Be careful not to touch a head chip. Clean the drum lead with a pick.

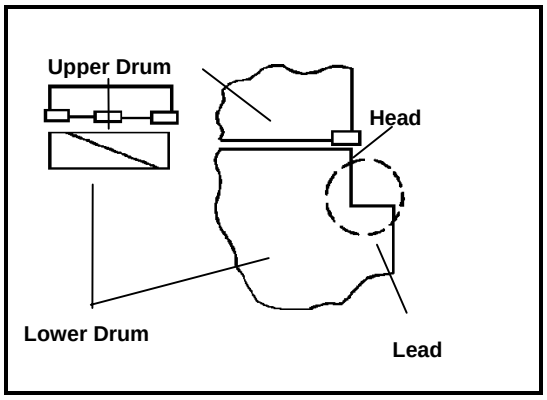

4-3. Cleaning of A/C Head: (Weekly)

Wipe the A/C head with a cloth soaked by cleaning liquid. Wipe again with a dry cloth.

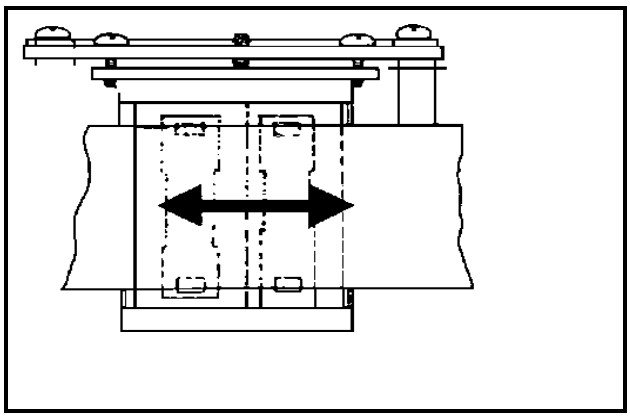

4-4. Cleaning of Pinch Roller and Capstan: (Weekly)

Wipe the Pinch Roller and Capstan with a cloth soaked by cleaning liquid.

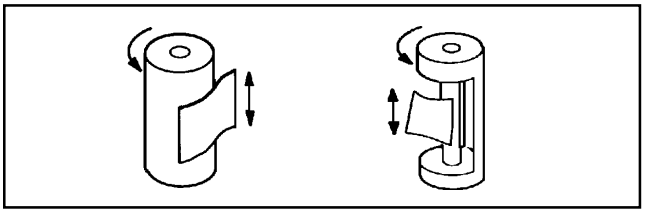

4-5. Cleaning of Post :(Weekly)

Wind a cloth on a pick. Wipe each post dry with that pick . Wipe again with a dry cloth. For metal posts wipe with cleaning liquid. Then wipe dry again.

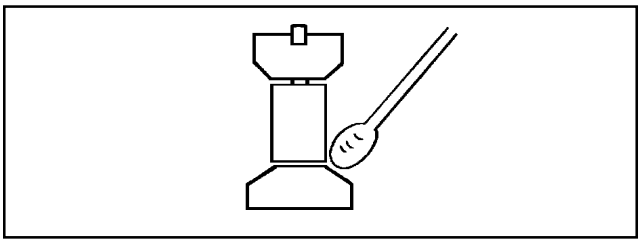

Note:

Use the clean cloth for cleaning purpose. Do not use any dirty cloth.

The Cleaning Cloth can be ordered as spare part. The part number indicated as below.

CLEANING CLOTH : VZZ0095

5. Mechanical Adjustment

5-1. Name of tape transportation

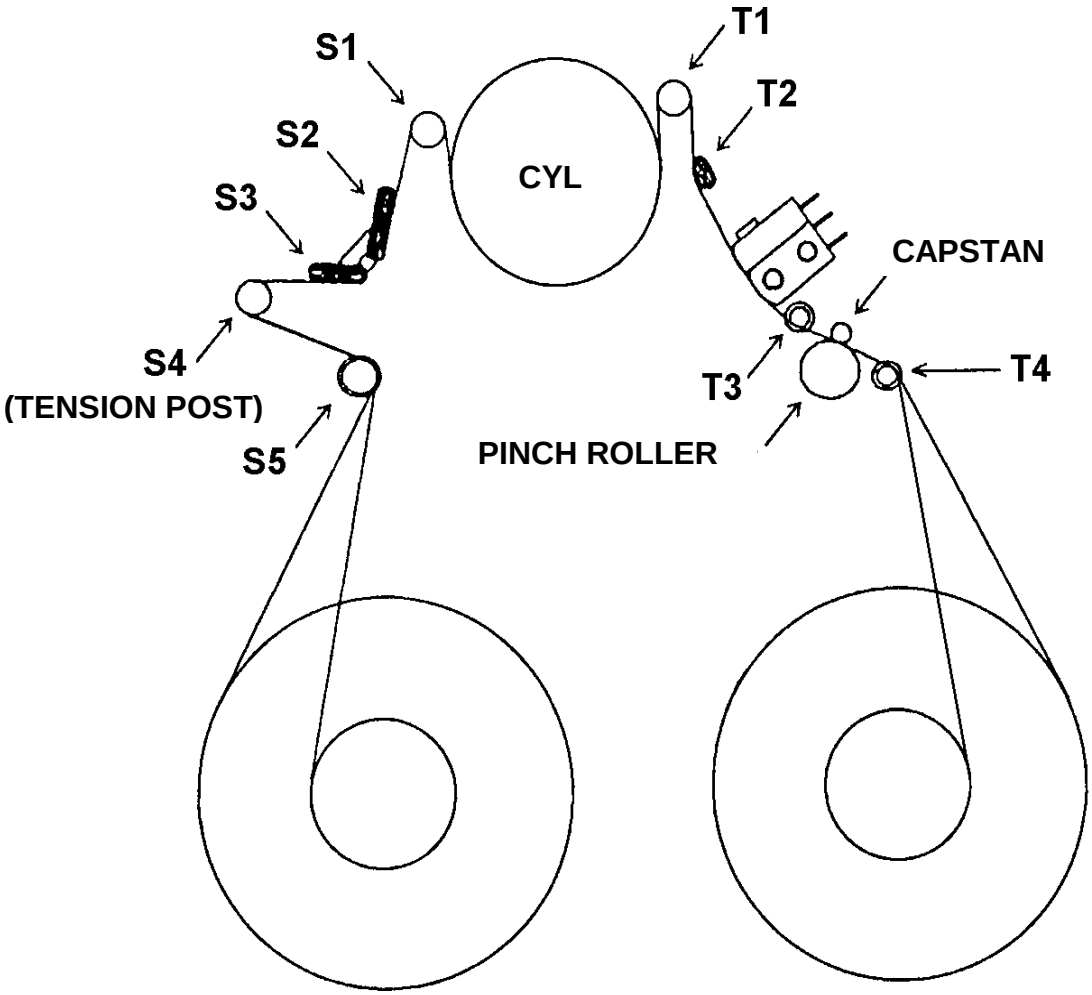

5-2.Pinch Solenoid Position Adjustment

SPEC.	T = 0.3mm
TEST POINT	Gap T
ADJUSTMENT	Screw(A), Hole(B)
MODE	EJECT (Power OFF)
TOOL	VFK0357(Eccentric Driver)

1. Confirm the power of condition at VTR.
2. Push the pinch roller by hand to be close to capstan.
3. Push the pinch solenoid by hand so that the pinch roller contacts capstan.
4. Loosen the two screws (A) and adjust the hole (B) by VFK0357 so that gap (T) is within specification.
5. The position for confirm Gap, which is located spring scratch to Plate (C) side.

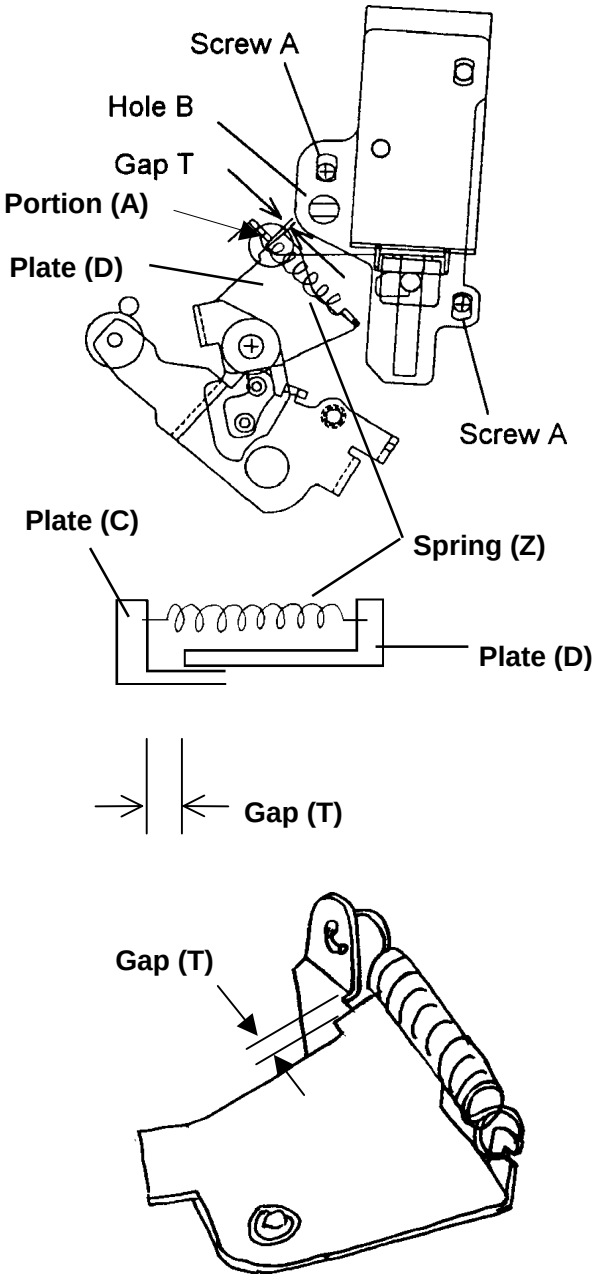

5-3. Main Brake Torque Confirmation

SPEC	Direction A : more than 80g Direction B : more than 15g
TEST POINT	S reel, T Reel
MODE	EJECT (POWER OFF)
TOOL	VFK71(150g), VFK1191(45g), VFK1152

1. Remove the Cassette Up Unit.
2. Install the adapter (VFK1152) to the torque gauge (VFK71).
3. Put the torque gauge on **S Reel and** Turn the torque gauge to **direction A** until **S Reel** slips against brake.
4. Confirm the torque is within specification.
5. Put the torque gauge on **T Reel** and turn the torque gauge to **direction A** until **T Reel** slips against brake.
6. Confirm the torque is within specification
7. Install the adapter (VFK1152) to the torque gauge (VFK1191).
8. Put the torque gauge on **S Reel and** turn the torque gauge to **direction B** until **S Reel** slips against brake.
9. Confirm the torque is within specification.
10. Put the torque gauge on **T Reel** and turn the torque gauge to **direction B** until **T Reel** slips against brake.
11. Confirm the torque is within specification.

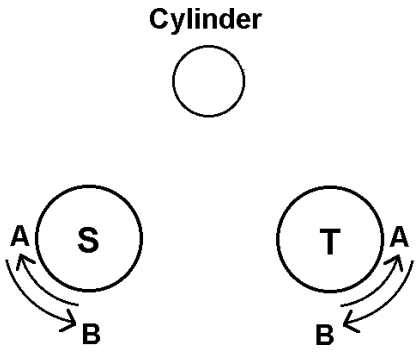

5-4. Post Height Pre-adjustment

MODE	EJECT (POWER OFF)
TOOL	VFK1153, VFK1154 (Flange Tool)

1. Turn the power OFF and then set the tube* to cover the sensor LED and place the unit in no tape loading mode.
2. **NOTE:** Make a tube* by yourself.
3. Install the Mech. Neutral Plate (VFK1153) and adjust each post height as shown in figure.
4. Adjust the each post to Lower limit by VFK1154 as shown in figure.
5. VFK1149 use for Post height adjustment of S4 and S5 post. VFK1151 use for Post height adjustment of T3 and T4 post.

Post	Limit	Post Driver
S5 Post	Lower*	VFK1149
S4 Post	Lower*	VFK1149
T3 Post	Lower	VFK1151(2.5mm Nut Driver)
T4 Post	Lower	VFK1151(2.5mm Nut Driver)

Note: Lower* : Turn **S4** and **S5** posts 1 round more counterclockwise from lower limit position.

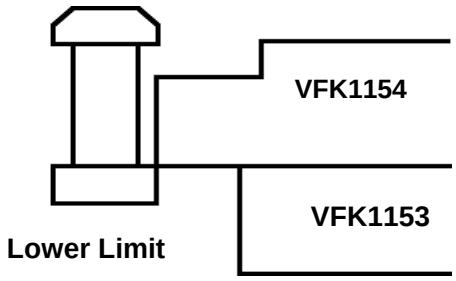

Lower Limit

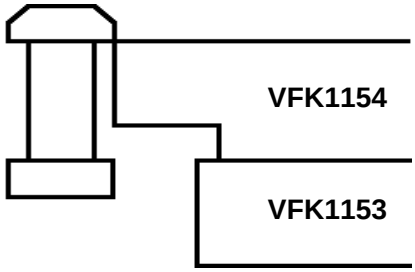

Upper Limit

5-5. Tension Adjustment Flowchart

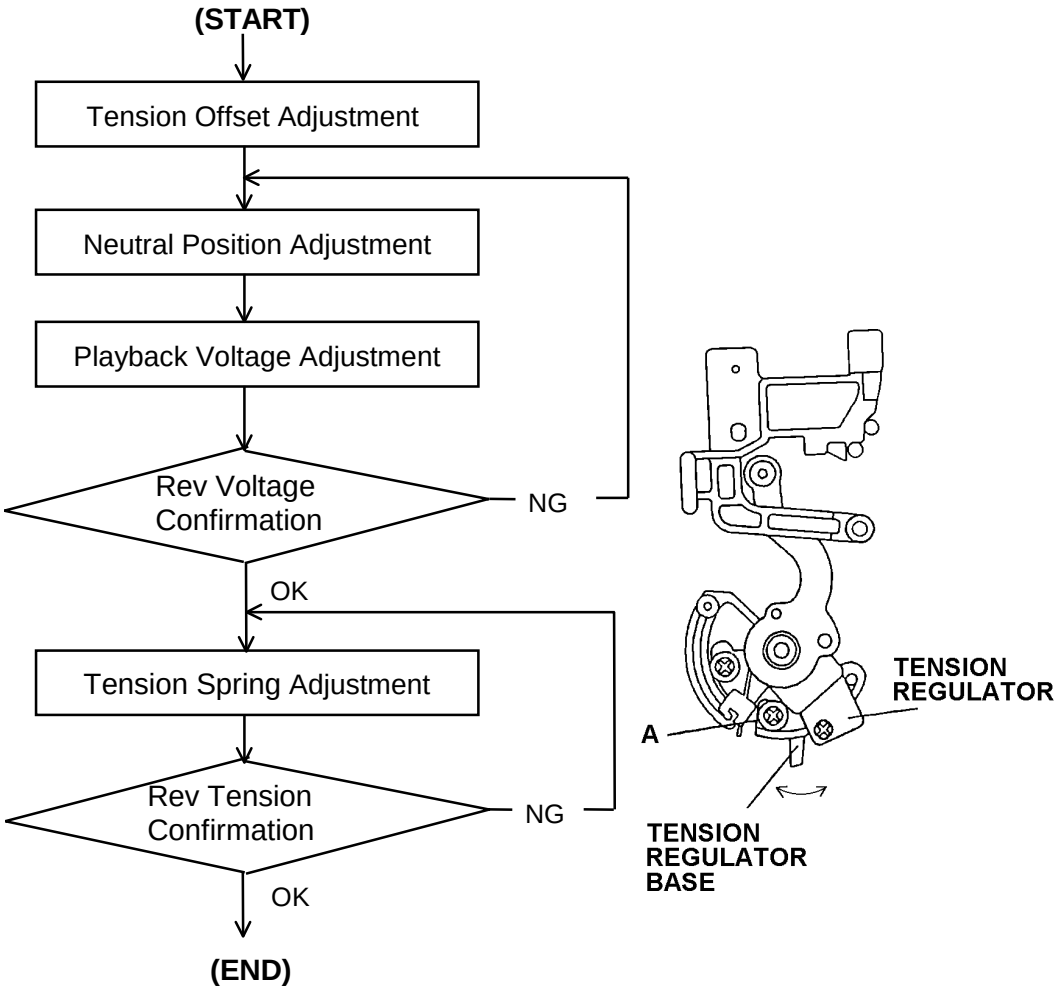

5-6. Tension Offset Adjustment

BOARD	SERVO
SPEC	2.5 ± 0.05V
TEST POINT	TP201(SERVO:F1)
ADJUSTMENT	VR1(MECH I/F)
MODE	EJECT
TOOL	Digital Volt Meter

1. Adjust the **VR1** so that the DC voltage at **TP201** is within specification.

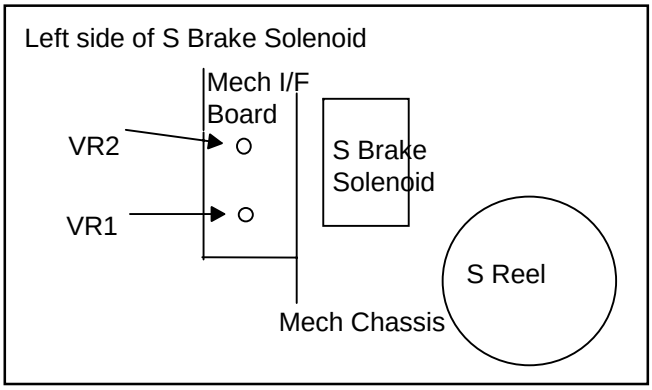

5-7. Tension Arm Neutral Position Adjustment

BOARD	SERVO
SPEC	2.5 ± 0.1V
TEST POINT	TP201(SERVO:F1)
ADJUSTMENT	Base position of Tension Regulator Board
MODE	STOP
TOOL	Digital Volt Meter VFK1208 (Black, with hole)

1. Unscrew the 2 screws and remove the Carriage Support Panel on the Front Loading Unit.
2. Disconnect the connector P3 on the Carriage Board of the Front Loading Unit..
3. Unscrew the 6 screws and remove the Top Plate on the Front Loading Unit.
4. Install the VFK1208(black with hole) as shown in figure
5. Connect the Digital Volt Meter to Test point.
6. Place the unit into the no tape loading mode(Refer to No tape loading mode procedure as mentioned as below.
7. Loosen the screw (A) and move the lever (D) with tweezers for adjust the sensor position so that the DC voltage at **TP201** is within specification.

[No tape loading procedures]

Open the SERVO ADJUST menu on the Service Menu. Select the “T REEL TRQ” by cursor key and press SEARCH button on the Front Panel, then loading is started. During adjustment, hold the SEARCH button.

CAUTION: 1. Do not use magnetized tweezers and Screw driver.

2. Do not touch the magnetize Screw driver to S-Reel FG magnet portion, when the lever (D) portion is adjusting.

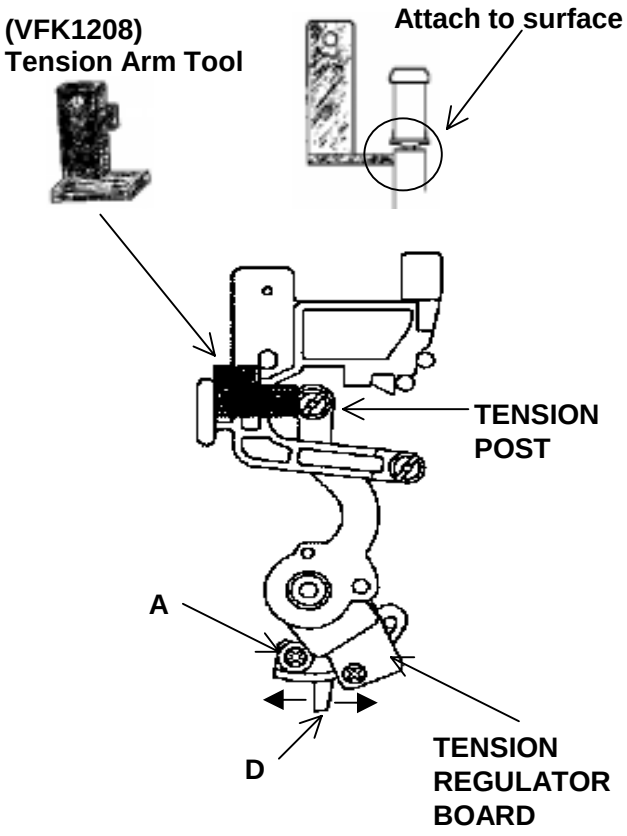

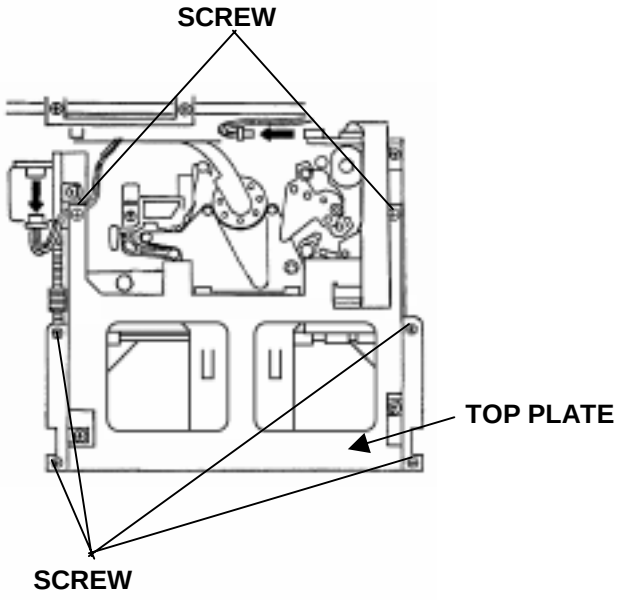

5-8. Tension Arm PLAY and REV voltage adjustment

BOARD	SERVO
SPEC	(PLAY) 3.8 ± 0.05V (REV) 1.2 ± 0.3V
TEST POINT	TP201(SERVO:F1)
ADJUSTMENT	VR2(Mech I/F)
MODE	STOP
TOOL	Digital Volt Meter VFK1156(Black:for PLAY position) VFK1155(White:for REV position)

1. Install the VFK1156(black) as shown in figure.
2. Connect the Digital Volt Meter to Test point.
3. Place the unit into no tape loading mode.
4. Adjust the VR2 so that the DC voltage at TP201 is within specification (PLAY).
5. Install the VFK1155 as shown in figure and confirm that the DC voltage at TP201 is within specification (REV).
6. If it out of spec, perform the Neutral Position adjustment again.

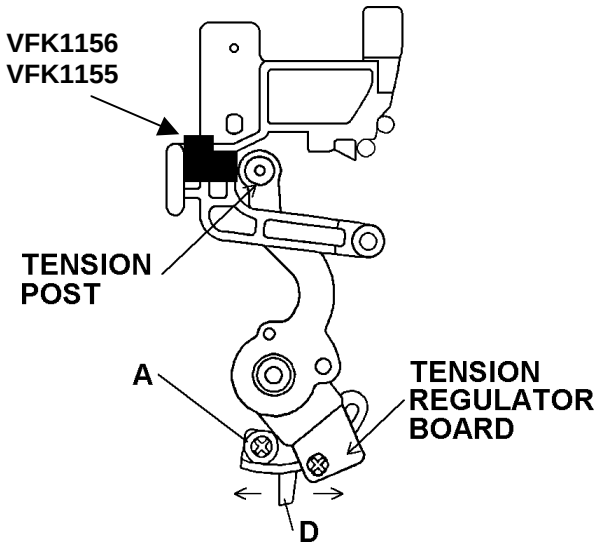

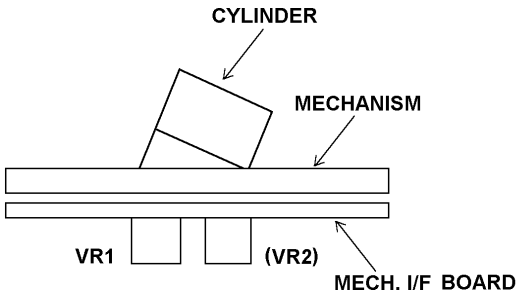

5-9. Tension Regulator Spring Adjustment

BOARD	SERVO
SPEC	11 ± 1gf
TEST POINT	TP201(SERVO:F1)
ADJUSTMENT	Tension Regulator Spring hook (B)
MODE	STOP
TOOL	Digital Volt Meter VFK1188(30g Dial Tension Gauge)

1. Connect the Digital Volt Meter to Test point.
2. Place the VTR into no tape loading mode.
3. Insert the tension gauge to push the tension post to the direction R until the voltage at the TP201 is 3.8V (PLAY position)
4. Loosen the screw (C) and adjust the position of hook (B) so that the indication of gauge is within specification.

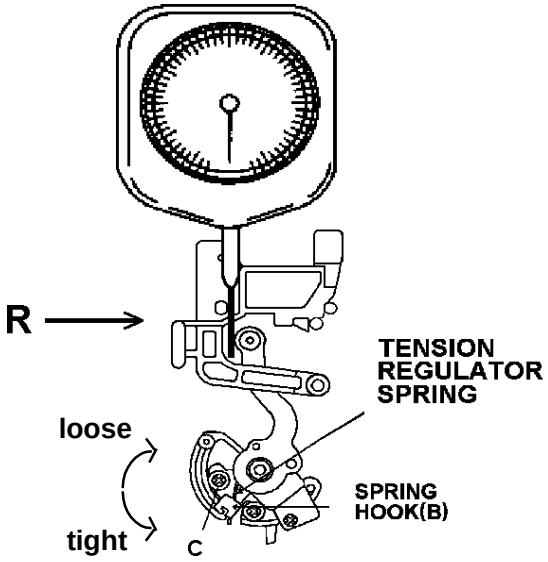

5-10. REV Tension Confirmation

BOARD	SERVO
SPEC.	18 ± 2gf
TEST POINT	TP201(SERVO:F1)
MODE	STOP
M.EQ	Digital Volt Meter VFK1188(30g Dial Tension Gauge)

1. Connect the Digital Volt Meter to Test point.
2. Place the VTR into no tape loading mode.
3. Insert the tension gauge to push the tension post to the direction R until the voltage at the TP201 is 1.2V (REV position)
4. Confirm that the indication of gauge is within specification. If not, make the Tension Spring Adjustment again.
5. After finish this adjustment , grew the screw A,B and C . The grew quantity at B is half of A and C.

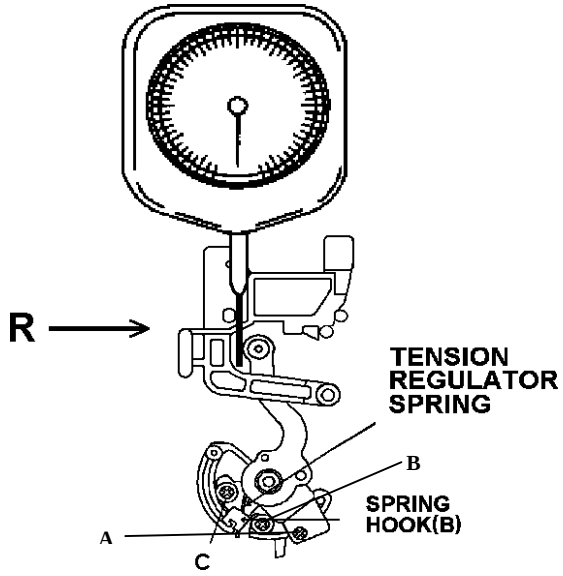

5-11. Tension Confirmation

SPEC	(PLAY)6.0 ± 1gf (REV) 9.0 ± 2gf
MODE	PLAY, REV × 1
TAPE	63 min M size Blank Tape
TOOL	VFK1145(Tension Meter)

1. Play back beginning portion of the tape.
2. Insert the tension meter between **S3 post** and **S4 post**.(Refer to figure).
3. Confirm the tension is within specification.
4. Place the unit in REV mode.
5. Insert the tension meter between **S4 post** and **S5 post**.(Refer to figure)
6. Confirm the tension is within specification.

NOTE: Be careful not to give some tape damage.

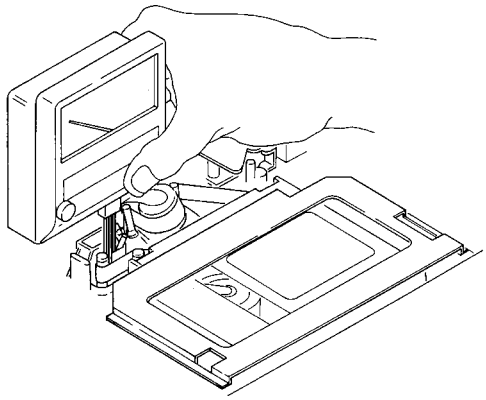

Play Tension

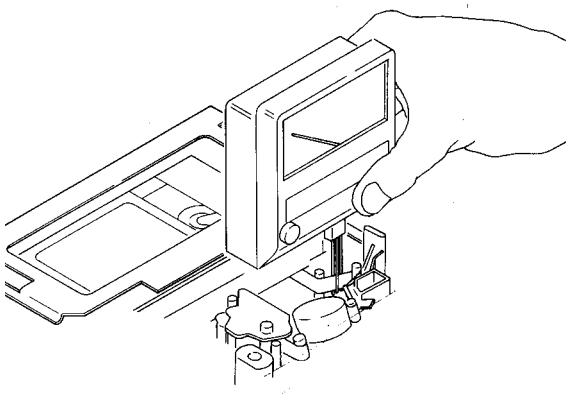

Rev Tension

5-12. Tape Pass Adjustment Procedure

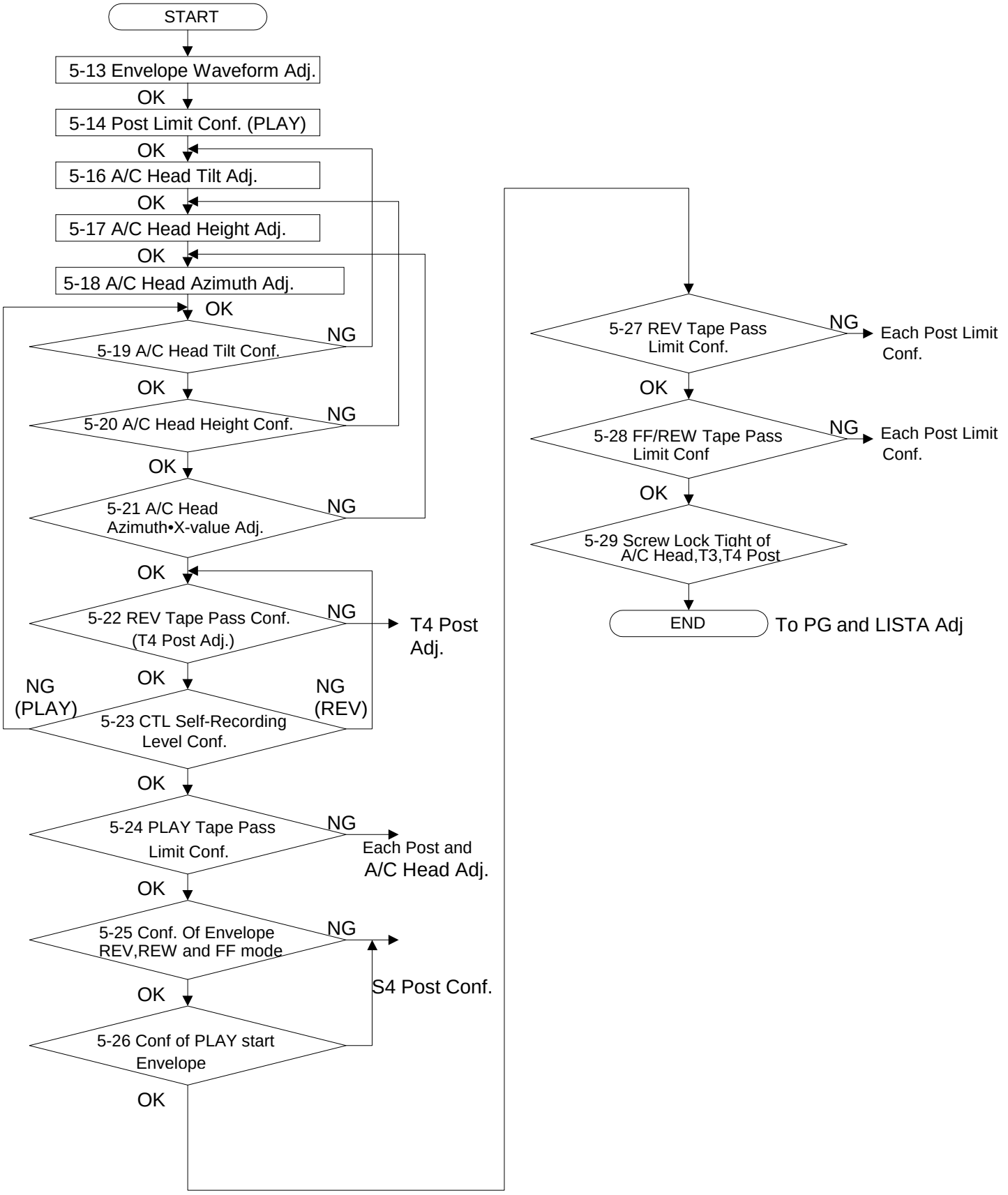

5-13. Envelope Waveform Adjustment

SPEC	V1/Vmax, V2/Vmax, V3/Vmax ≥ 0.8
TEST POINT	TP16:R/P ENV (RF AMP Board:H4) TP1 :TRIG/HSW (RF AMP Board:H4)
ADJUSTMENT	S1, T1 Post Height
MODE	PLAY (ATF)
TAPE	**NTSC:** VFM3582KM (X-value) **PAL:** VFM3682KM (X-value)
M.EQ	Oscilloscope
TOOL	VFK1149(Post Driver)

1. Playback the alignment tape.
2. Adjust S1 and T1 post height so that the R/P envelope output is within the specification.
3. When the S1 and T1 posts are adjusted, first raise the post height and make small the entrance and exit side of the envelope, then down the post until envelope becomes flat.
4. With order to adjustment, basically adjust T1 post for makes flat at exit side of envelope first and adjust S1 post.
5. After finish this adjustment, unload the tape and load the tape again, then confirm the shape of Envelope waveform does not changed.

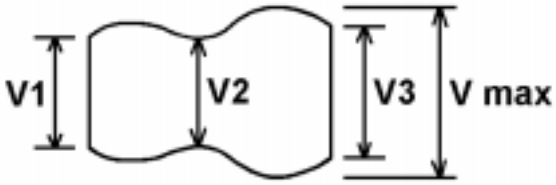

5-14 Post Limit Confirmation (PLAY)

SPEC	Post limit shown in the table No tape curl
MODE	PLAY
TAPE	Blank Tape
TOOL	VFK1149(Post Driver) VFK1151(Nut Driver)

1. Confirm that the tape pass limit follow the as shown as below table and adjust it in case of need.
2. Confirm that the kinds of D, E and F condition do not appeared on the tape as shown in figure.

Post	Limit	Adjustment
S5	Lower limit or Free	S5 Post Height
S4	Lower Limit	S4 Post Height
S1	Upper Limit	Envelope waveform
T1	Upper Limit	Envelope waveform
T3	Lower Limit	T3 Post Height
T4	Lower limit or Free	T4 Post Height

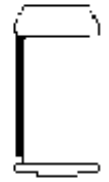

A: UPPER

B: FREE

C: LOWER

D: Curl

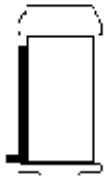

E: Bend

F: Drop

5-15. A/C Head Adjustment Method

Adjustment Item	SCREW	Adjustment Method	Torque
Tilt adjustment	A	Tighten direction……Decrease CUE Loosen direction…….Increase CUE	
Height adjustment	B	Tighten direction……In case of increase CTL, when A/C Head Press down. Loosen direction……In case of increase CTL, when A/C Head lift up.	
Azimuth adjustment	F	Phase is adjusted by screw F	
X-value adjustment	C D	Adjust X-value by VFK0357 at Hole (E), then tighten the screw (C) and (D) to fix A/C Head horizontal position.	2.5Kg.cm
Fixed Tilt and Azimuth	G	Screw (G) is always tighten during adjustment except Tilt and Azimuth.	1.0Kg.cm
Fixed height	H	After height adjustment, tighten the screw (H) to fix height of A/C Head.	

SCREW	Tool for adjustment
A	VFK1178 (0.89mm Hex Driver)
B	VFK1150 (5.5mm Tool for adjustment)
F	VFK1148 (1.5mm Hex Driver)
C,D,G	VFK1209 (Torque Driver) VFK1375 (1.5mm Post Axis Driver)
H	VFK1190 (1.5mm L type of Hex Wrench)

1. Each adjustment of A/C Head should be perform under the screw (G) tightened.
2. Confirm the screw (A) does not loosen, before execute the A/C Head Tilt adjustment. The screw (A) should be always touch to top of A/C Head.
3. Be careful the tape damage at T3 Post, when adjust tilt of A/C Head.
4. When the height of A/C Head is adjusted by Nut (B), first the screw (H) should be loosen. And after height adjustment finished, tighten the screw (H) lightly.
5. Each adjustment of A/C Head should be finished at the condition of turn the each adjustment screw tighten direction. And hit the portion (L) lightly for remove the distortion.
6. Adjust alternately each A/C Head adjustment with Envelope Waveform adjustment.

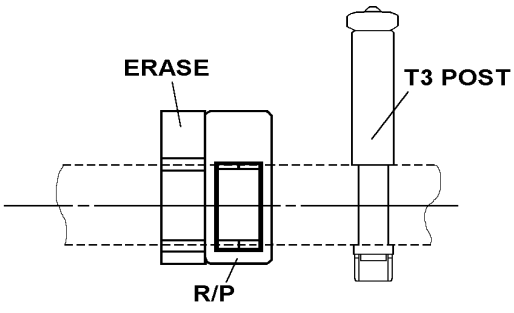

A/C HEAD HEIGHT

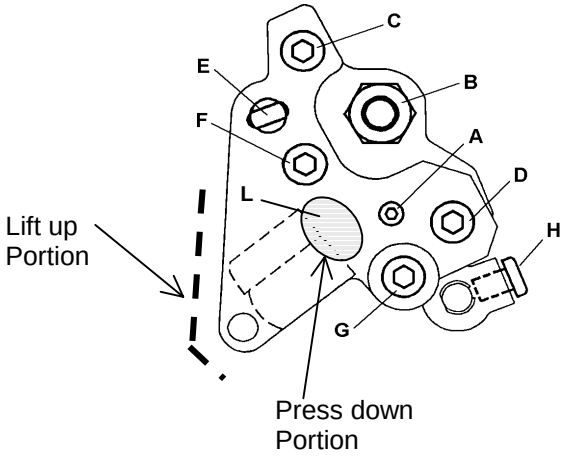

5-16. A/C Head Tilt Adjustment

SPEC	Lower limit at T3 Post No tape curl
ADJUSTMENT	SCREW A and G (A/C Head)
MODE	PLAY
TAPE	Blank Tape
M.EQ	VFK1148, VFK1178(Hex Driver)

1. Play back the tape and adjust **screw (A)** for adjustment of tilt of A/C Head so that the tape path has lower limit without curl at T3 post.
2. To adjustment, loosen the screw (G) and make curl on tape at lower flange of T3 post by screw (A). And tighten screw (A) accordingly for find the point of curl disappeared. After finish adjustment for screw (A), tighten the screw (G) is tightened with 1.0Kg/cm of torque.

(NOTE)

1. In case of turn clockwise screw (A).
   → Tape goes up at T3 post.
   In case of turn counter-clockwise screw (A).
   → Tape goes down at T3 post.
2. When screw adjustment finished, with each adjustment screw on A/C Head should be finished tighten direction. And confirm that the screw does not loosen.
3. Adjust and confirmation should be performed alternately with each A/C head adjustment (Azimuth and Height).

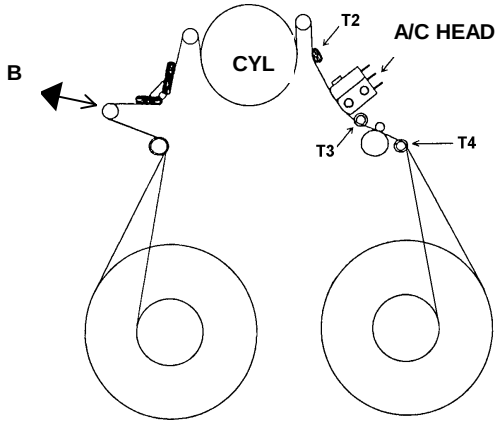

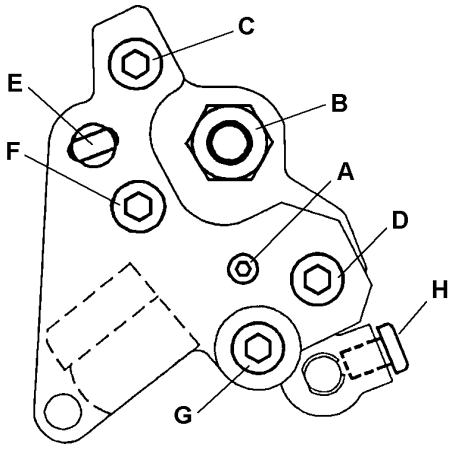

5-17. A/C Head Height adjustment

BOARD	SERVO
SPEC	CTL Output (C1,C2 ≥ 1.8V)
TEST POINT	TP30:CTL
ADJUSTMENT	SCREW B and H (A/C Head)
MODE	PLAY
TAPE	**NTSC:** VFM3582KM (X-value) **PAL:** VFM3682KM (X-value)
M.EQ	Oscilloscope
TOOL	VFK1150(Nut Driver) VFK1190(Hex Wrench)

1. Observe the CTL output (**TP30)** on the Servo board.
2. Press and Lift up to A/C Head lightly as indicated as figure position, then confirm that the **CTL** output level is **decreased**.
3. If increases CTL output, when press the A/C Head. Loosen the **screw H** and adjust the **screw B counterclockwise** until CTL output is maximized.
4. If increases CTL output, when lift up the A/C Head. Loosen the **screw H** and adjust the **screw B clockwise** until CTL output is maximized.
5. After tightening the **screw H(2.0kg)**, confirm the level again.

< NOTE >

1. Adjust alternately with other A/C head adjustments(Azimuth, Height).

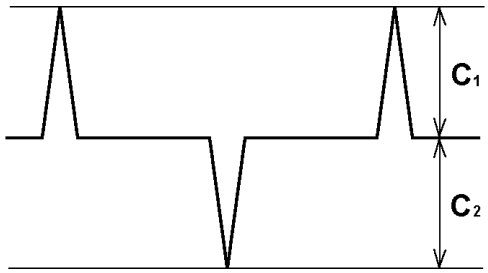

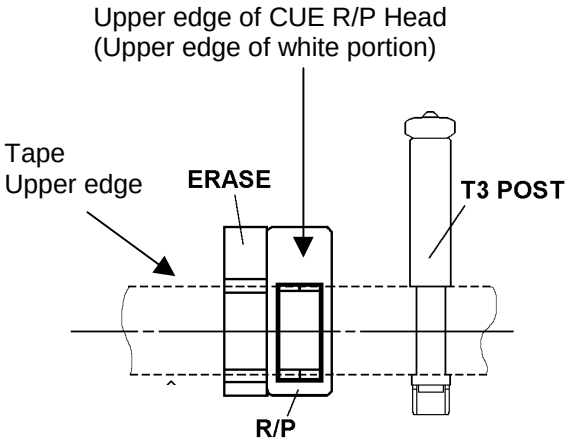

A/C HEAD HEIGHT

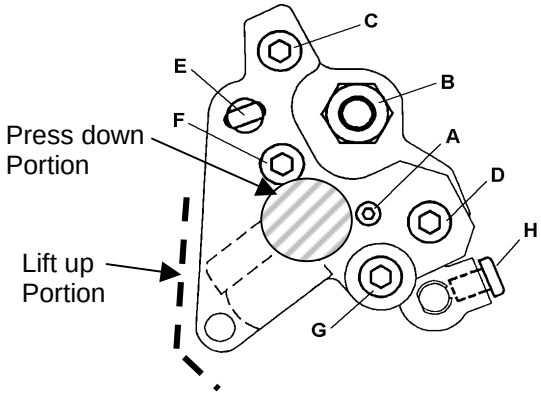

5-18. A/C Head Azimuth Adjustment

BOARD	SERVO
SPEC	CTL Output:C1,C2 = C1 max, C2 max
TEST POINT	TP30:CTL
ADJUSTMENT	SCREW F (A/C Head)
MODE	PLAY
TAPE	**NTSC:** VFM3582KM (X-value) **PAL:** VFM3682KM (X-value)
M.EQ	Oscilloscope
TOOL	VFK1148(Hex Driver)

1. Observe the CTL output (TP30) on the Servo Board.
2. To adjustment, loosen the screw (G) and adjust screw (F) so that the CTL output become maximum.
3. Tighten screw (G) with 1.0Kg torque.

< NOTE >

1. Adjust alternately with other A/C head adjustments(Azimuth, Height).

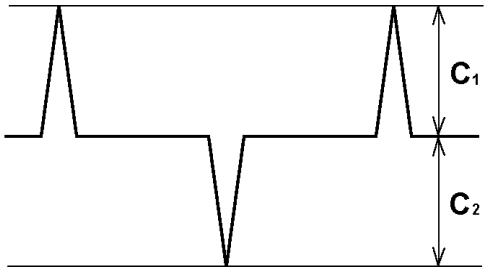

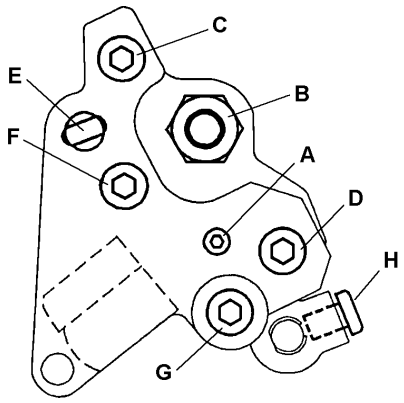

5-19. A/C Head Tilt Confirmation

SPEC	A/Amax ≥ 0.8
TEST POINT	TP101:CUE AUDIO (CUE Board:H2)
ADJUSTMENT	SCREW A and G (A/C Head)
MODE	PLAY
TAPE	NTSC:VFM3582KM (X-value) **PAL:** VFM3682KM (X-value)
M.EQ	Oscilloscope
TOOL	VFK1178, VFK1148(Hex Driver)

1. Playback the Alignment tape.
2. Confirm that the **screw G** and **H** are not loosened.
3. Push the tension arm follow the arrow (B) direction as shown in figure as range of T2 post does not move. And confirm that the CUE output level is within specification.
4. If out of specification, loosen the **screw G** and adjust the **screw A**, then tighten the **screw G** with **1.0kg** torque.
5. The final touch of the adjustment must be turned clockwise. After this adjustment, confirm that the screw A is not loosened.
6. If adjust the screw A, Confirm that the tape pass condition follow Post Limit Confirmation procedure (item 1-14).

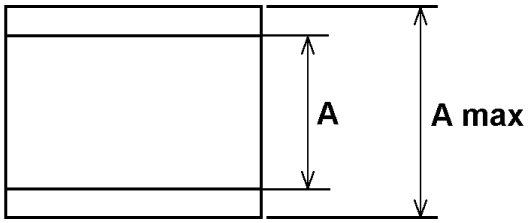

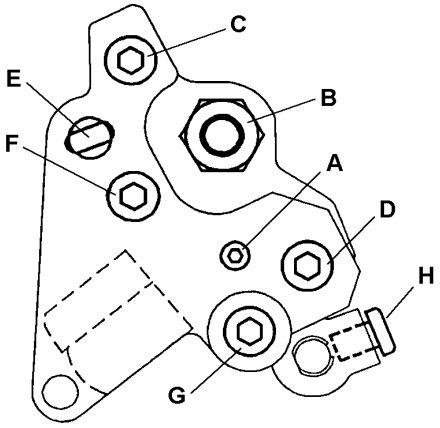

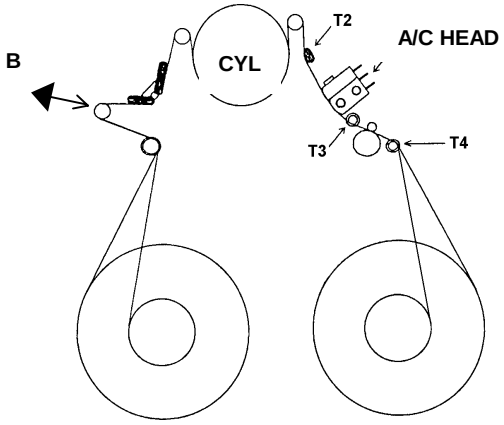

5-20. A/C Head Height Confirmation

SPEC	A ≥ 0.95 × Amax, C1, C2 ≥ 1.8V
TEST POINT	TP101 CUE AUDIO (CUE Board:H2) TP30 CTL (SERVO Board:F1)
ADJUSTMENT	SCREW B and H (A/C Head)
MODE	PLAY
TAPE	**NTSC:** VFM3582KM (X-value) **PAL:** VFM3682KM (X-value)
M.EQ	Oscilloscope
TOOL	VFK1150 (Nut Driver) VFK1190 (Hex Wrench)

1. Playback the Alignment tape.
2. Press and Lift up to A/C Head lightly as indicated as figure position, then confirm that the CUE output level at TP101 does not in**creased**.
3. If increases CUE output, A/C Head Height adjustment performed. And also confirm that the CTL output level.
4. If adjust the height of A/C Head, Azimuth also changed. Therefore adjust and confirm alternately Height and Azimuth of A/C Head.
5. After screw (H) is tightened, height and tilt of A/C Head are changed. Therefore confirmation of specification must be done after tightening the screw (H).

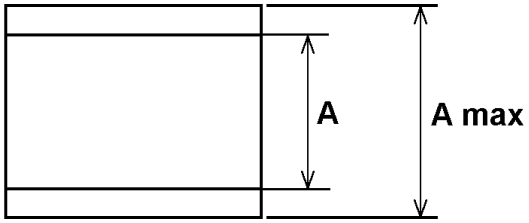

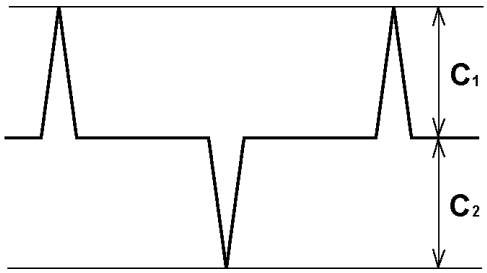

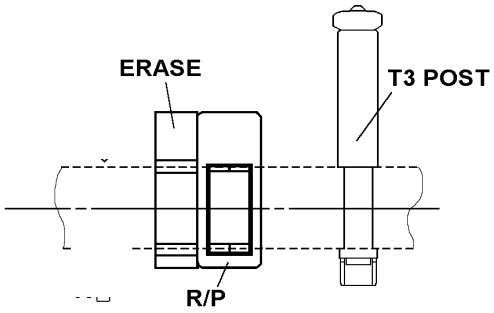

A/C HEAD HEIGHT

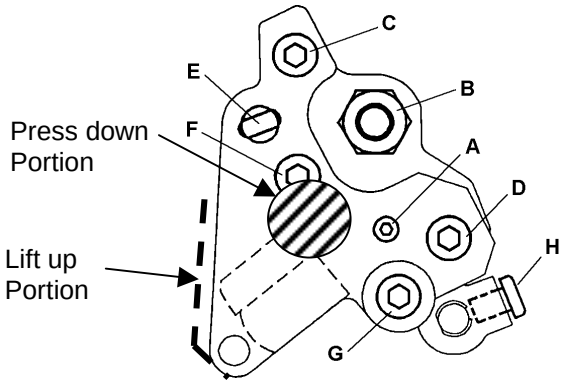

5-21. A/C Head Azimuth and X-value Adjustment

SPEC.	As shown in below figure. 250us ≤ t1, t2 ≤ +250us	**TEST POINT**	TP16 :RP ENV (RF AMP Board:H4) TP233: RP HSW (SERVO Board:F1) TP101: CUE AUDIO (CUE Board:H1) TP30: CTL (SERVO:F1)
ADJUSTMENT	A/C Head each screws		
MODE	PLAY SERVO ADJUST: A07:RP LINEAR P	**M.EQ**	Oscilloscope
TAPE	**NTSC:** VFM3582KM (X-value) **PAL:** VFM3682KM (X-value)	**TOOL**	VFK0357 (Eccentric Screwdriver)

1. Open the Service menu and select the item “A07: RP LINEAR P” on Servo Adjust menu for RP Head ATF Playback.
2. Playback the X-value Alignment tape.
3. Confirm that the phase of CUE and CTL are within specification against RP HSW pulse trigger. If not perform the X-value adjustment follow the below procedure.
4. Adjust A/C Head Azimuth (refer to Azimuth adjustment procedure) so that the CTL and Lack part of CUE (t2) is match in the phase.
5. Confirm the lack track of envelope, and select the HSW correspond with it (The lack track is correspond HSW high with L ch).
6. Adjust X-value so that the reference of HSW and CTL trigger (CTL falling edge is the reference: refer to below figure) are match in the phase (t1). To adjust X-value, loosen the screw C and D, adjust the hole E by VFK0357. After adjustment tighten the screw C and D with 2.5Kg torque. At this time adjust the phase simultaneously with Azimuth so that the CTL and CUE phase is kept.
7. Hit the top plate (portion L as shown in below figure) of A/C Head lightly by a pointed end of Eccentric driver, then confirm the phase is not shifted finally.

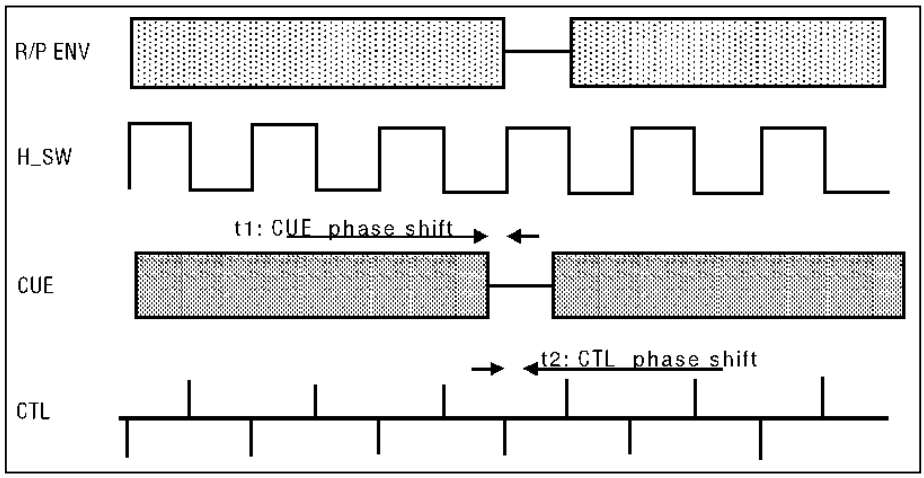

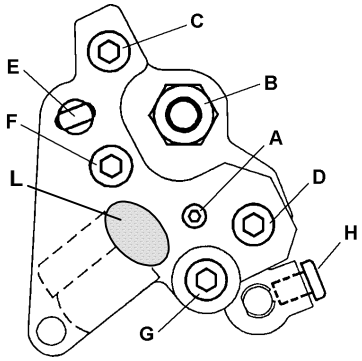

5-22. REV Tape Pass Confirmation and Adjustment (T4 post height adjustment)

SPEC.	C1, C2 ≥ Cp1, Cp2 × 0.75 Lower limit at T3 post on REV mode	**TAPE**	**NTSC:** VFM3582KM (X-value) **PAL:** VFM3682KM (X-value)
TEST POINT	TP30(SERVO:F1)	**M.EQ**	Oscilloscope
ADJUSTMENT	T4 post height	**TOOL**	VFK1151(Nut Driver)
MODE	REV × 1		

1. Place unit into REV mode, and confirm the post limit and CTL signal are in the specification. IF not, adjust T4 post follow the below procedure.
2. Turn the Nut of T4 post clockwise or counterclockwise follow the tape limit condition at T3 post. The maximum rotation angle is 90 degree.
3. Place unit into REV X1 mode and confirm the CTL output level is become more than 75% on play mode. Confirm the tape pass limit become lower limit at T3 post and the tape does not have curl at T3 and T4 post.
4. However out of specification, adjust T4 post height follow the Post Height Pre-adjustment procedure.

T4 Nut adjustment direction

Direction of adjustment nut of T4 post	CTL level on REV mode	Lower limit at T3 post On REV mode
Tighten direction	Increase	Tape touch to strong
Loosen direction	Decrease	Tape touch to weak

Post Limit

Post Name	Tape limit					
	A	B	C	D	E	F
T3 Post	×	×	O	×	×	×
T4 Post	O	O	O	×	×	×

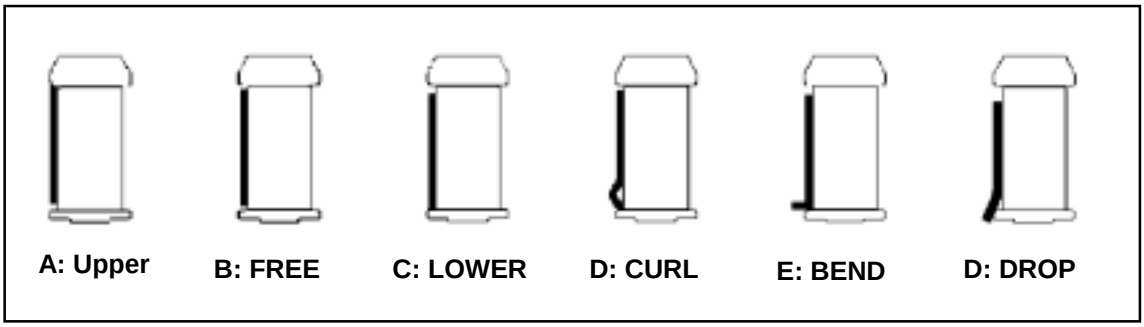

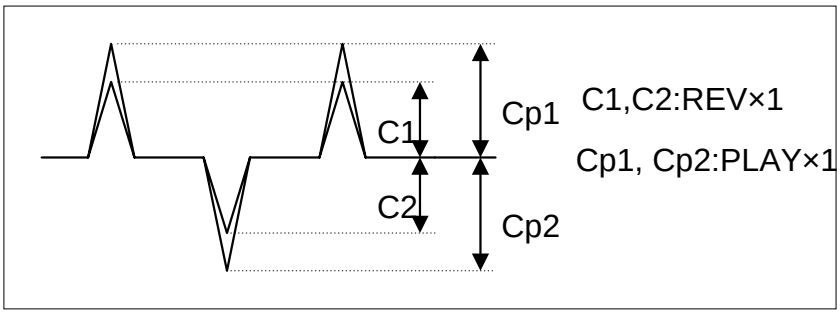

5-23. CTL Self Recording Level Confirmation

SPEC.	Refer to below table
TEST POINT	TP30 (SERVO Board)
MODE	REC and PLAY
TAPE	Blank tape
M.EQ	Oscilloscope

NOTE: This confirmation should be done after each screws of A/C Head are fixed.

1. Record the blank tape.
2. Playback the recorded portion and confirm the CTL level is within specification as shown as below table on PLAY and REV X1 mode.

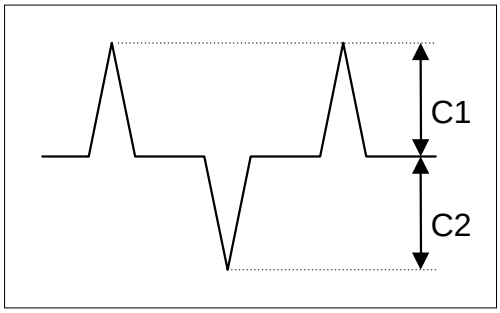

CTL Output Level C1,C2		
PLAY	REV × 1	REV × 0.2
C1,C2 ≥ 1.8V	C1,C2 ≥ 1.4V	C1,C2 ≥ 1.2V

CTL Output Level C1,C2

1. PLAY NG → Re-confirm the A/C Head height adjustment.
2. REV NG → Re-confirm the T4 post adjustment.

5-24. PLAY Tape Pass Limit Confirmation

SPEC.	Each Post limit shown in table
MODE	PLAY
TAPE	M cassette (MP tape) tape. Tape beginning and end portion

Post Name	Tape Limit (Refer the figure)						Adjustment	
	A	B	C	D	E	F		
S5 post	×	O	O	×	×	×	S4, S5 Post	Post Height Pre-Adj.
S4 post	×	×	O	×	×	×		
S1 post	O	×	×	×	×	×	S1 Post	Envelope waveform Adj.
T1 post	O	×	×	×	×	×	T1 Post	Envelope waveform Adj.
T3 post	×	×	O	×	×	×	A/C Head tilt	A/C Head tilt Adj.
T4 post	×	O	O	×	×	×	T4 Post	Post Height Pre-Adj

1. Place unit into PLAY mode and confirm the each post limits is within specification.

2. If out of specification, adjust the post height follow the each adjustment procedure (Refer to above table).

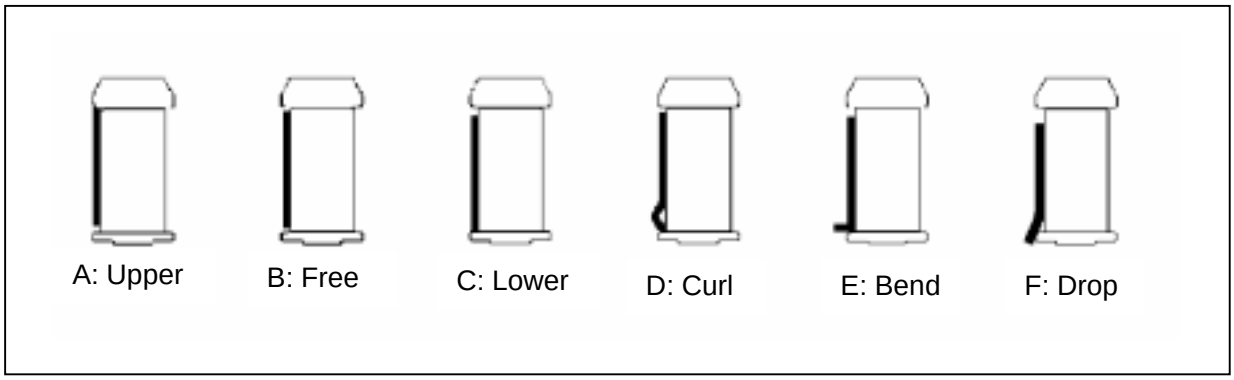

5-25. Confirmation of Envelope on REV,REW and FF mode.

SPEC.	V/Vmax ≥ 0.9
TEST POINT	TP16 :RP ENV (RF AMP Board:H4)
MODE	REV, REW, FF
TAPE	**NTSC:** VFM3582KM (X-value) PAL**:** VFM3682KM (X-value)
M.EQ	Oscilloscope

1. Confirm that the Envelope waveform becomes in the specification on REV,REW and FF mode as refer to figure and below.
   - Waveform must be Diamond Style.
   - All the peak level must be more than 90% of maximum level.
     V/Vmax ≥ 0.9
2. If out of spec, adjust S4 post height.

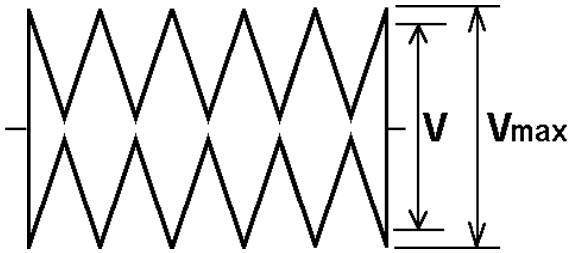

OK

NG

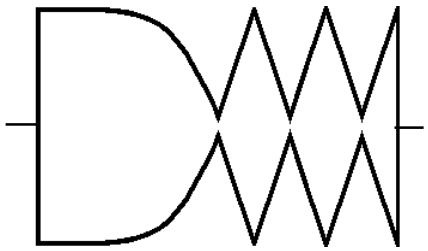

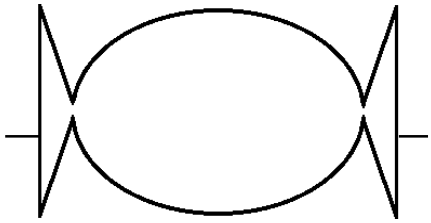

5-26. Confirmation of Play Start Envelope

TEST POINT	TP16:RP ENV (RF AMP Board:H1)
MODE	REW/REV → PLAY Loading completion → PLAY FF → PLAY
TAPE	L cassette (123 min, Recorded tape) Tape beginning portion
M.EQ	Oscilloscope

Note: This adjustment must be done after Envelope Waveform Adjustment.

1. Confirm that the envelope appears immediately, when the mode is changed from REW to PLAY, REV to PLAY, FF to PLAY, and Lording to PLAY mode.
2. If out of spec, adjust S4 post height.

OK

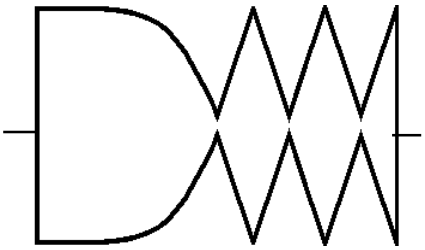

NG

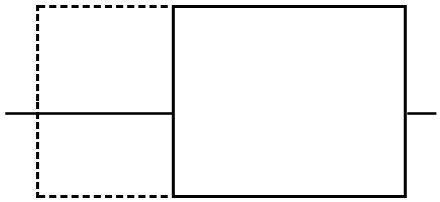

5-27. Tape Pass Limit Confirmation

SPEC	Each Post limit shown in table.
MODE	REV
TAPE	M cassette (MP tape) tape. Tape beginning and end portion

Post Name	Tape Limit(Refer to figure)					
	A	B	C	D	E	F
S5 Post	○	○	○	×	×	×
S4(Tension) Post	×	○	○	×	×	×
S1 Post	○	×	×	×	×	×
T1 Post	○	○	○	×	×	×
T3 Post	×	×	○	×	×	×
T4 Post	×	×	○	×	×	×

1. Place unit into REV mode and confirm the each post limits is within specification.
2. If out of specification, adjust the post height follow the each adjustment procedure (Refer to above table).

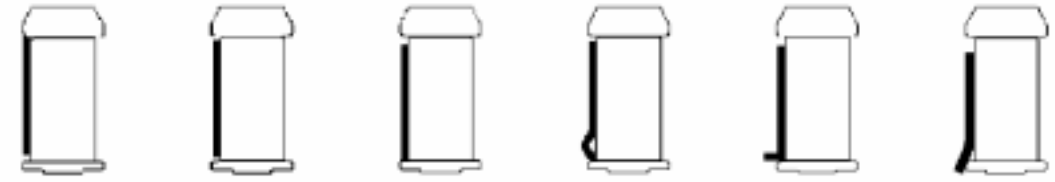

A: Upper B: Free C: Lower D: Curl E: Bend F: Drop

5-28. FF, REW Tape Pass Limit Confirmation

SPEC.	Each Post limit shown in table.
MODE	FF, REW
TAPE	M cassette (MP tape) tape. Tape beginning and end portion

Post Name	Tape Limit (Refer to figure)					
	A	B	C	D	E	F
S5 Post	○	○	○	×	×	×
S4 (Tension) Post	×	○	○	×	×	×
S1 Post	○	×	×	×	×	×
T1 Post	○	○	○	×	×	×
T3 Post	○	○	○	×	×	×
T4 Post	○	○	○	×	×	×

1. Place unit into FF and REV mode and confirm the each post limits is within specification.
2. If out of specification, adjust the post height follow the each adjustment procedure (Refer to above table).

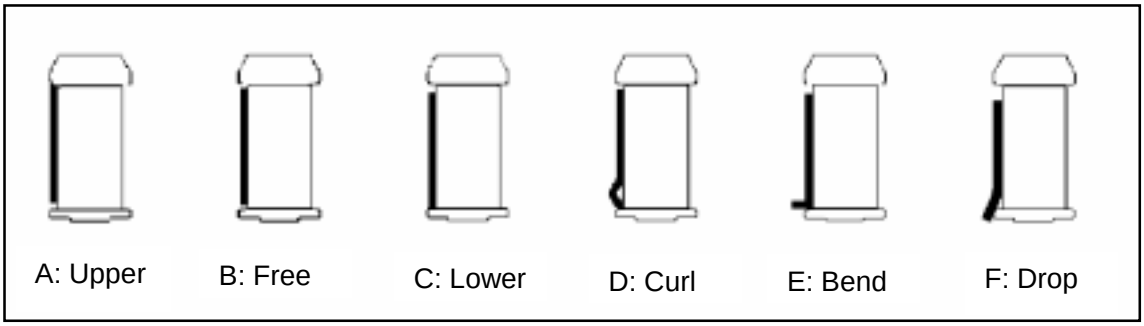

5-29. Screw Lock Tight of A/C Head and T3, T4 Post

[Screw Lock Tight of A/C Head]

	SCREW A	OTHER SCREW
Lock Tight Grew Quantity	1/3 of the screw	1/3 of the screw

1. Fix the screw by the Lock Tight Grew after adjustment..
2. Before adjustment melt the Grew.

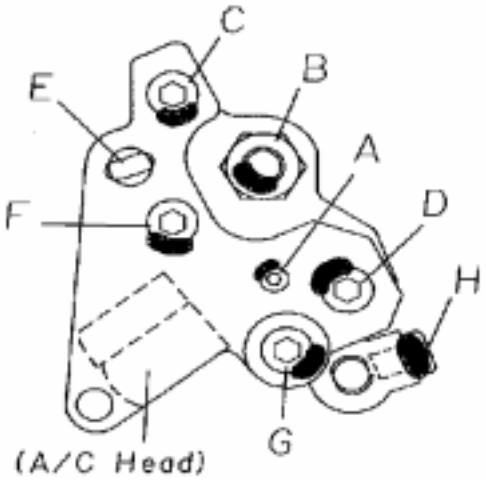

[Screw Lock Tight of T3 and T4 Post]

	T3 Post	T4 Post
Lock tight grew quantity	1/4 of the screw	1/4 of the screw

1. After adjustment, attach the lock tight grew at the Nylon nut..
2. Before adjustment, melt the Grew.

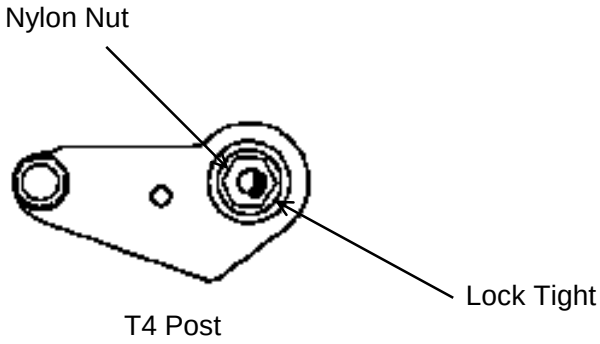

5-30. PG SHIFTER Adjustment

SPEC.	T1, T2 = 126.4µsec ± 2µsec.
MODE	PLAY
TEST POINT	TP320 SPA (SERVO Board:F1) TP233 R/P HSW (SERVO Board:F1)
ADJUSTMENT	A01:PG SHIFTER (EVR on SERVO ADJUST menu)
M.EQ	Oscilloscope
TAPE	**NTSC:** VFM3582KM (X-value) **PAL:** VFM3682KM (X-value)

1. Open the SERVO ADJUST menu on the Service menu and select the item “A01:T PG SHIFTER“.
2. Playback the Alignment tape.
3. Press the SEARCH button and keep it until the numerical value of “A01:PG SHIFTER” are renewed.
4. Connect the scope toTP233 and TP320. Trigger the scope by TP233. Then it is displayed as shown in figure.
5. Confirm that the period of T1 and T2 in specification (126.4µsec ± 2µsec).

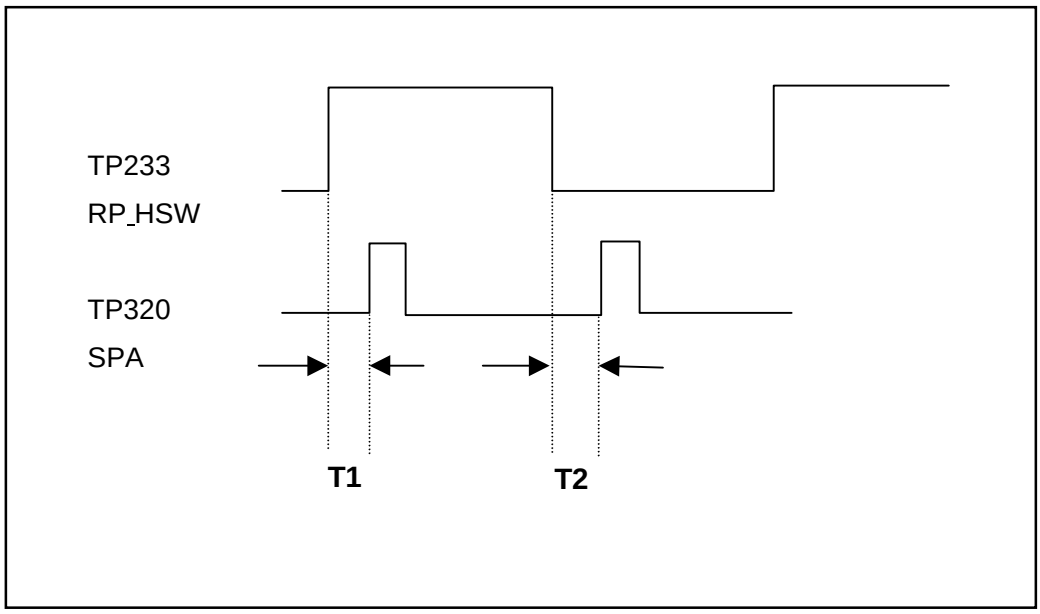

5-31. LISTA Adjustment Procedure.

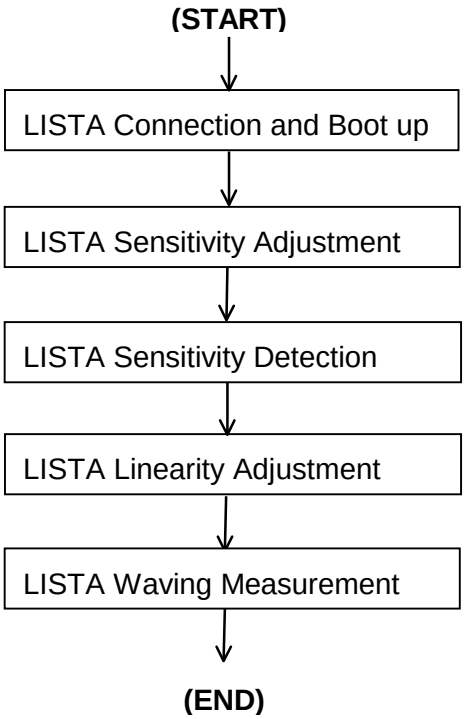

5-32. LISTA Connection and Boot Up

TEST POINT	TP321 ATF ERR (SERVO Board:F1) TP233 PB HSW (SERVO Board:F1) TP232 R/P HSW (SERVO:Board:F1) TG510 GND (SERVO Board:F1)
M.EQ	P/C (AD Board should be installed), Oscilloscope
TAPE	**NTSC:** VFM3581KM (LISTA alignment tape) **PAL:** VFM3681KM (LISTA alignment tape)
TOOL	VFK1481(LISTA Software), VFK1186(LISTA Cable)

1. Connect the LISTA Cable to A/D board on PC.
2. Connect the Clips of LISTA Cable to test point on Servo Board as follow as below.

①.ATF: 321 (ATF error)

②.HSW: 233 (HSW:RP) or TP232 (HSW:PB)

③.GND: 510 (GND)

CONNECTION

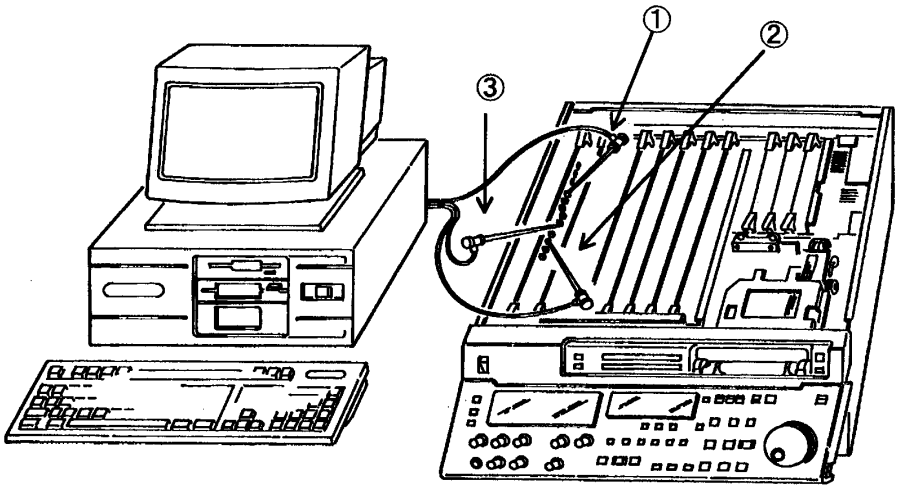

3. Boot up the LISTA software on DOS mode.

☆ Install and Boot up.

All files on the floppy disk (VFK1481) copy to created directly on PC(**i.e.** C:¥LISTA).

Type “LISTA” and press ENTER Key, then boot up the LISTA software VFK1481

4. Select the item “DVCPRO” for format select on the menu.
5. Select the item “AJ-D850" for selected model on the menu.(AJ-D850 is equivalent to AJ-D850)
6. After selected model, appeared alignment tape data on the screen for select the Serial number on the alignment tape. But if LISTA software have not resisted data of alignment tape, press the ESC key, then main menu is display on the screen. And select item “<4> Alignment Tape” for entry the data on the attachment sheet, which is enclosed of alignment tape.

< How to Entry the Attachment Data of Alignment Tape >

1. Select the item “<4> Alignment Tape“ on the main menu of the LISTA software.
2. Select the item “<2> ENTRY” on the alignment tape menu.
3. After display the screen of “<<Alignment tape Data Entry>>“, first input the Serial number follow the printed number on the tape label. And input the number “0” or “1” for select the PAL/NTSC. And after that for entry the tape type, in case of DVCPRO input to “0”, in case of DV input to “1”.
4. After select the Tape type, the frame for input the DATA and CHECK SUM appeared on the screen. Input the numerical value in numerical order on the data sheet, which are enclosed with alignment tape. If input the wrong number, appear the error message on the screen, then confirm that the data on the sheet.
5. After entry the data, select “ <1> SELECT “ on the Alignment Tape menu and select the serial number of the alignment tape.

<<Alignment Tape Data Entry>> Serial No.0596003(NTSC) 18um

[1]	- 0.1
[2]	0.1
[3]	0.0
[4]	0.2
[5]	0.6
[6]	0.5
[7]	0.7
[8]	0.9
[9]	1.0
[10]	0.8

[11]	0.7
[12]	1.0
[13]	0.7
[14]	0.5
[15]	0.2
[16]	- 0.5
[17]	- 0.3
[18]	- 0.3
[19]	- 0.1
[20]	- 0.6

[21]	- 0.4
[22]	- 0.2
[23]	- 0.7
[24]	- 0.6
[25]	- 0.7
[26]	- 0.3
[27]	- 0.4
[28]	- 0.4
[29]	- 0.6
[30]	- 0.3

[31]	- 0.4
[32]	- 0.6
[33]	- 0.3
[34]	- 0.2
[35]	- 0.1
[36]	- 0.3
[37]	- 0.1

[CS]	- 0.6

5-33. LISTA Sensitivity Adjustment (R/P Head)

SPEC.	Sensitivity:150 ± 15 (mV/um)
MODE	PLAY
TEST POINT	TP321 ATF ERR (SERVO Board:F1) TP233 R/P HSW (SERVO Board:F1) TG510 GND(SERVO Board:F1)
ADJUSTMENT	A06:RP GAIN P (SERVO ADJUST)
TAPE	**NTSC:** VFM3581KM (LISTA alignment tape) **PAL:** VFM3681KM (LISTA alignment tape)

Note: Before perform the Sensitivity adjustment, perform the PRE-EQ adjustment for adjust ENV Level (L/R) on RF AMP (H4) Board.(Refer to Sec. 4 :electrical adjustment).

1. Connect the Test Point to clip of LISTA cable for ATF Error signal measurement.
2. Open the SERVO ADJUST menu on Service menu and select the EVR " A06:RP GAIN P ".
3. Playback the LISTA alignment tape.
4. Select the **"<6> ATF Error Signal Monitor" on** the LISTA main menu and after appear the message "1.2% Speed…", press ENTER key, then sensitivity value as real time and waveform appear on the screen as shown as figure below.
5. Adjust EVR " RP GAIN P " so that the sensitivity value is within specification.
6. After finish this adjustment, press ESC key to exit to the main menu.

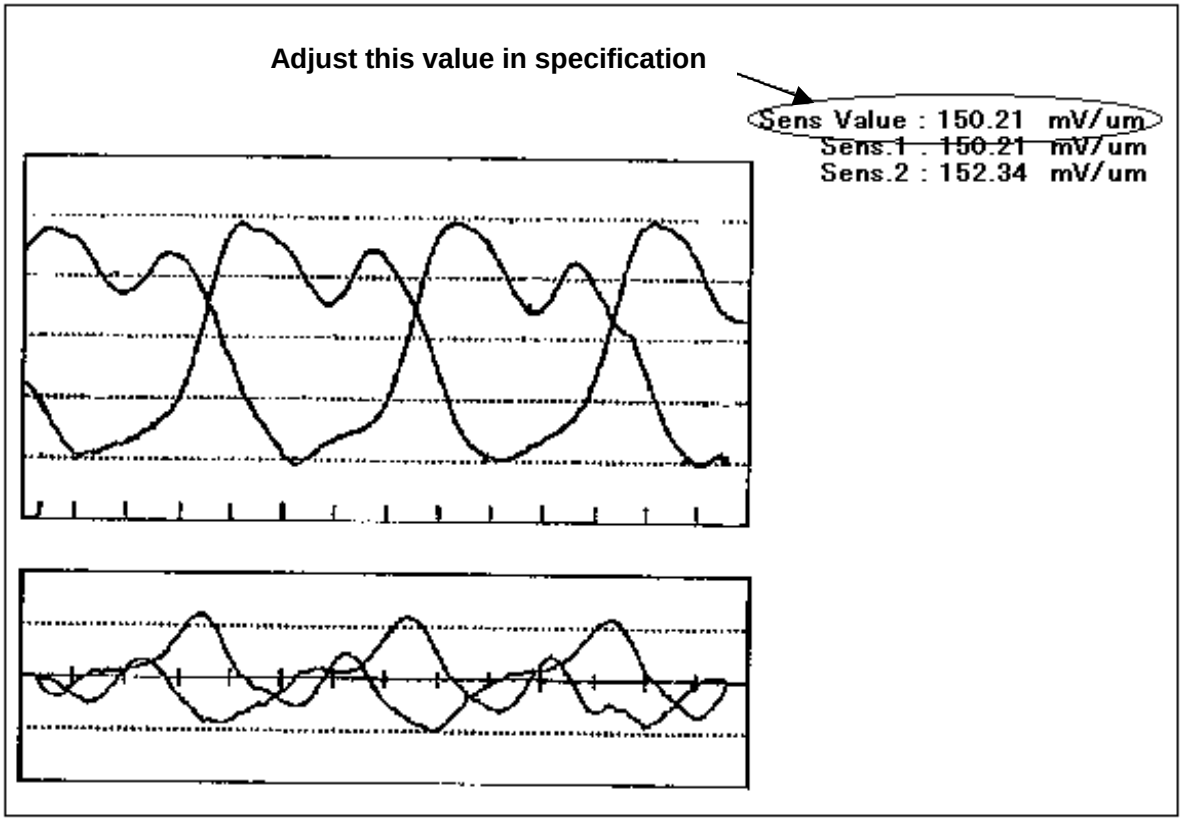

5-34. LISTA Sensitivity Detection (RP Head)

SPEC	Sensitivity:150 ± 15 (mV/um)
MODE	PLAY
TEST POINT	TP321 ATF ERR (SERVO P.C.Board:F1) TP233 R/P HSW (SERVO P.C.Board:F1) TG510 GND(SERVO P.C.Board:F1)
ADJUSTMENT	------
TAPE	**NTSC:** VFM3581KM (LISTA alignment tape) **PAL:** VFM3681KM (LISTA alignment tape)

1. Open the SERVO ADJUST menu on Service menu and select the EVR "A06:RP GAIN P".
2. Playback the LISTA alignment tape.
3. Select the "**<1>Sensitivity Measurement"** on the LISTA main menu and after appear the message "1.2% that Speed…", press ENTER key, then LISTA software start measurement of sensitivity value.
4. Confirm the sensitivity value is within specification, when the message <<Sensitivity Measurement Finish>> and "Sensitivity = numerical value" are displayed on the screen.
5. If out of specification, repeat the steps 3 and 4.
6. If still out of specification, perform the "LISTA Sensitivity Adjustment" again.

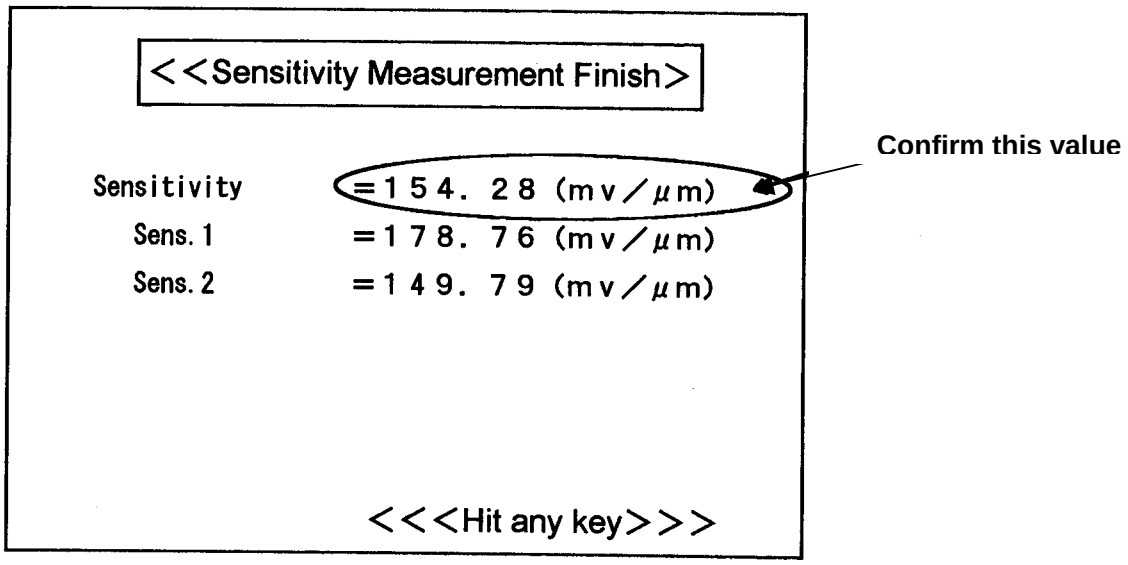

5-35. LISTA Linearity Adjustment and Waving Measurement.

SPEC	Linearity: Less than 3um, Waving: Less than 1.5um
MODE	PLAY (EVR is select to " A07: RP LINEAR P ")
TEST POINT	TP321 ATF ERR (SERVO Board:F1) TP233 R/P HSW(SERVO Board:F1) TG510 GND (SERVO Board:F1)
ADJUSTMENT	S1 and T1 Post Height
TAPE	**NTSC:** VFM3581KM (LISTA alignment tape) **PAL:** VFM3681KM (LISTA alignment tape)

1. Open the SERVO ADJUST menu on Service menu and select the EVR " A07: RP LINEAR P "
2. Playback the LISTA alignment tape.
3. Select the item "(2) Linearity Measurement" on the LISTA main menu and display the linearity waveform.
4. When the waveform as shown as below figure is displayed on the screen, press the "BS (back space)" key for display the waveform to center of scale on the screen. And adjust height of S1 and T1 post by Post Driver so that the linearity waveform is become flat as possible, and it should be in the specification.

☆ Adjust linearity waveform in the red dot line on the screen.

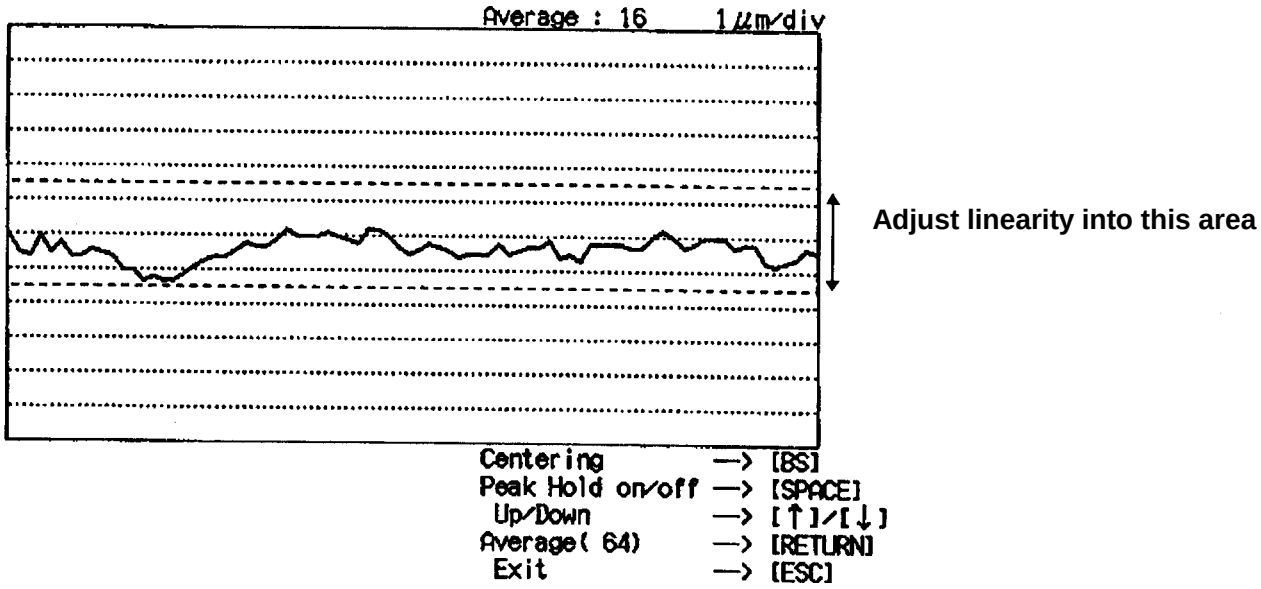

✪ POINT:

The part of left side of waveform(entrance side) is adjusted by height of S1 post and part of right side of waveform(exit side) is adjusted by height of T1 post.

Lower part of above waveform of figure is displayed lead on Cylinder.

When the post driver is remove from upper part of post, linearity waveform is changed.

After finish this adjustment, eject the tape and insert the tape again for confirm the shape of linearity waveform does not changed.

5. After finish the linearity adjustment, measure the numerical value of linearity and waving.

*** [Waving Measurement]**

1. Press “SPACE” key for make the Peak Hold during 30 seconds, when linearity is displayed.
2. After finish the Peak Hold, press “SHIFT” and “}” key simultaneously on the Key Board, then display the numerical values of “Linearity” and “Waving” on left lower portion of screen. And confirm the numerical values are in the specification. Also confirm the range of waving waveform is same quantity from entrance side to exit side. If the “Linearity” and “Waving” are out of specification and it caused by not enough limit of entrance or exit side of envelope, then adjust height of S1 and T1 post.
3. After this measurement is finished, press ESC key for return to main menu.

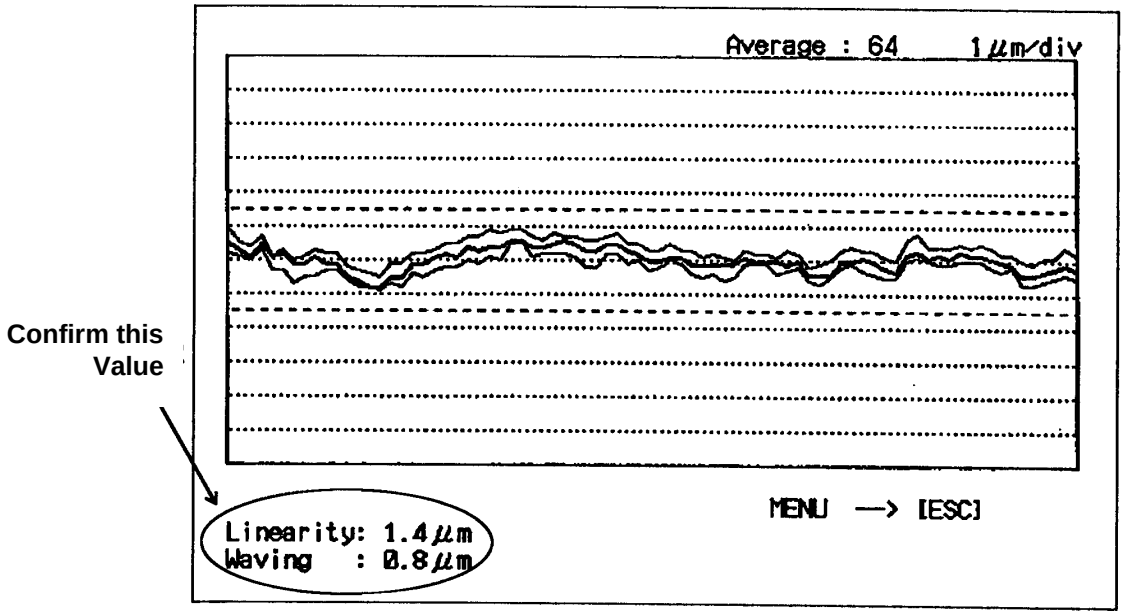

***NOTE: Saving of LISTA Data**

The LISTA software can be saved linearity waveform and measurement value of linearity and waving as one file data to PC.

1. Basically this operation should be performed after linearity and waving measurement finished.
2. Select the item “(3) Data Save/Load” on the LISTA main menu. And after open the menu select the item “<1> Save”.
3. The linearity waveform as Peak Hold displayed on the screen. And after appeared message “File Name?” on the screen, entry the File Name and Comment. File Name must be in 8 characters, and comment is must be in 20 characters. As comment, entry the Serial Number, VTR Model Number and Head Rotation Hours etc, for use management of linearity data of each VTR.
4. After completion of saving, select the item “<2> Load” on the “(3) Data Save/Load” menu, then appear the saved File Name on the screen. And select it previous saved file for confirm the waveform and numerical value displayed correctly. By press “SHIFT” and “}”, key simultaneously on the Key Board, then display the numerical values of “Linearity” and “Waving” on left lower portion of screen.

5-36. LISTA Sensitivity Adjustment (PB HEAD)

SPEC.	Sensitivity:150 ± 15 (mV/um)
MODE	PLAY
TEST POINT	TP321 ATF ERR (SERVO Board:F1) TP232 PB HSW(SERVO Board:F1) TG510 GND (SERVO Board:F1)
ADJUSTMENT	A04:PB GAIN P
TAPE	**NTSC:** VFM3581KM (LISTA alignment tape) **PAL:** VFM3681KM (LISTA alignment tape)

1. Connect the Test Point to clip of LISTA cable for ATF Error signal measurement.
2. Open the SERVO ADJUST menu on Service menu and select the EVR “A04:PB GAIN P”.
3. Playback the LISTA alignment tape.
4. Select the “**<6> ATF Error Signal Monitor” on** the LISTA main menu and after appear the message “1.2% Speed…“, press ENTER key, then sensitivity value as real time and waveform appear on the screen as shown as figure below.
5. Adjust EVR “A04 PB GAIN P“ so that the sensitivity value is within specification.
6. After finish this adjustment, press ESC key to exit to the main menu.

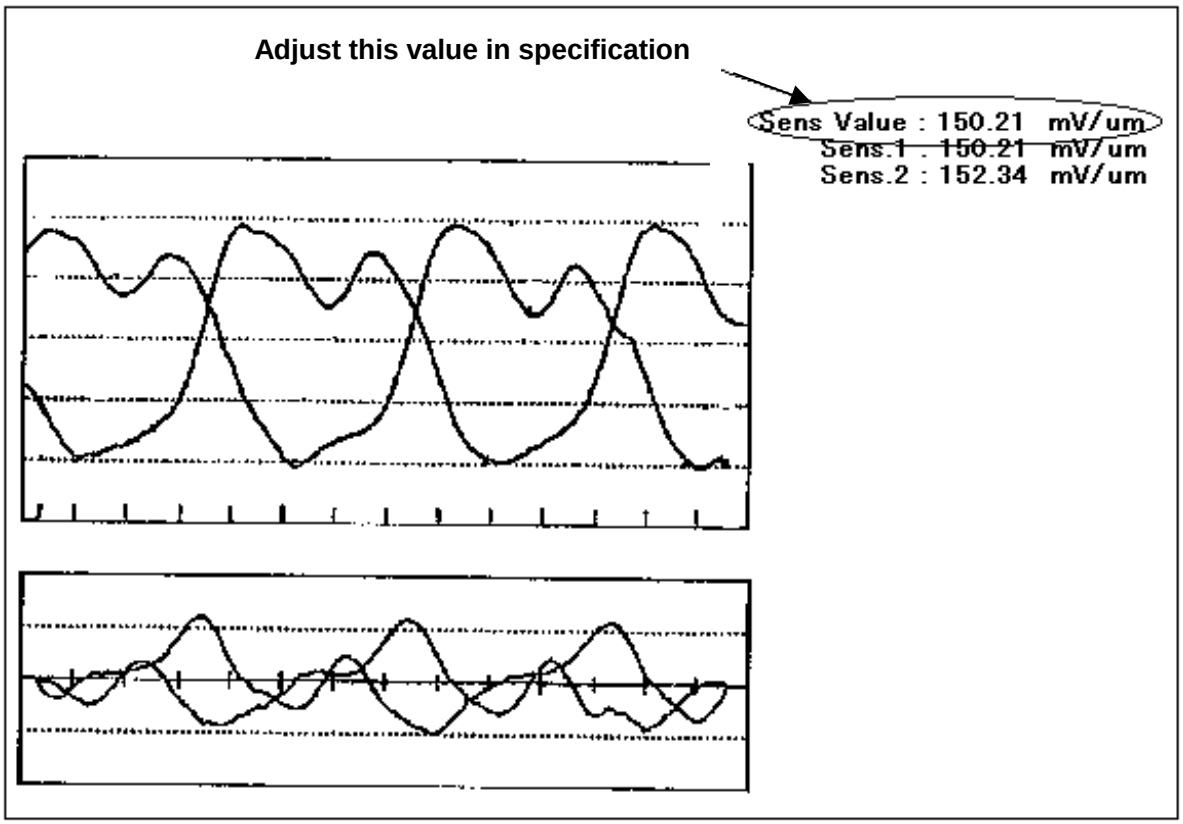

5-37. LISTA Sensitivity Adjustment (DV Compatibility)

SPEC.	Sensitivity:130 ± 30 (mV/um)
MODE	PLAY
TEST POINT	TP321 ATF ERR (SERVO Board:F1) TP233 PB HSW(SERVO Board:F1) TG510 GND (SERVO Board:F1)
ADJUSTMENT	A08:RP GAIN
TAPE	**NTSC:** VFM3581KM (LISTA alignment tape) **PAL:** VFM3681KM (LISTA alignment tape)

1. Connect the Test Point to clip of LISTA cable for ATF Error signal measurement.
2. Open the SERVO ADJUST menu on Service menu and select the EVR " A08:R/P GAIN ".
3. Playback the LISTA alignment tape.
4. Select the "**<6> ATF Error Signal Monitor" on** the LISTA main menu and after appear the message "1.2% Speed…", press ENTER key, then sensitivity value as real time and waveform appear on the screen as shown as figure below.
5. Adjust EVR "A08 R/P GAIN" so that the sensitivity value is within specification.
6. After finish this adjustment, press ESC key to exit to the main menu.

Adjust this value in the specification

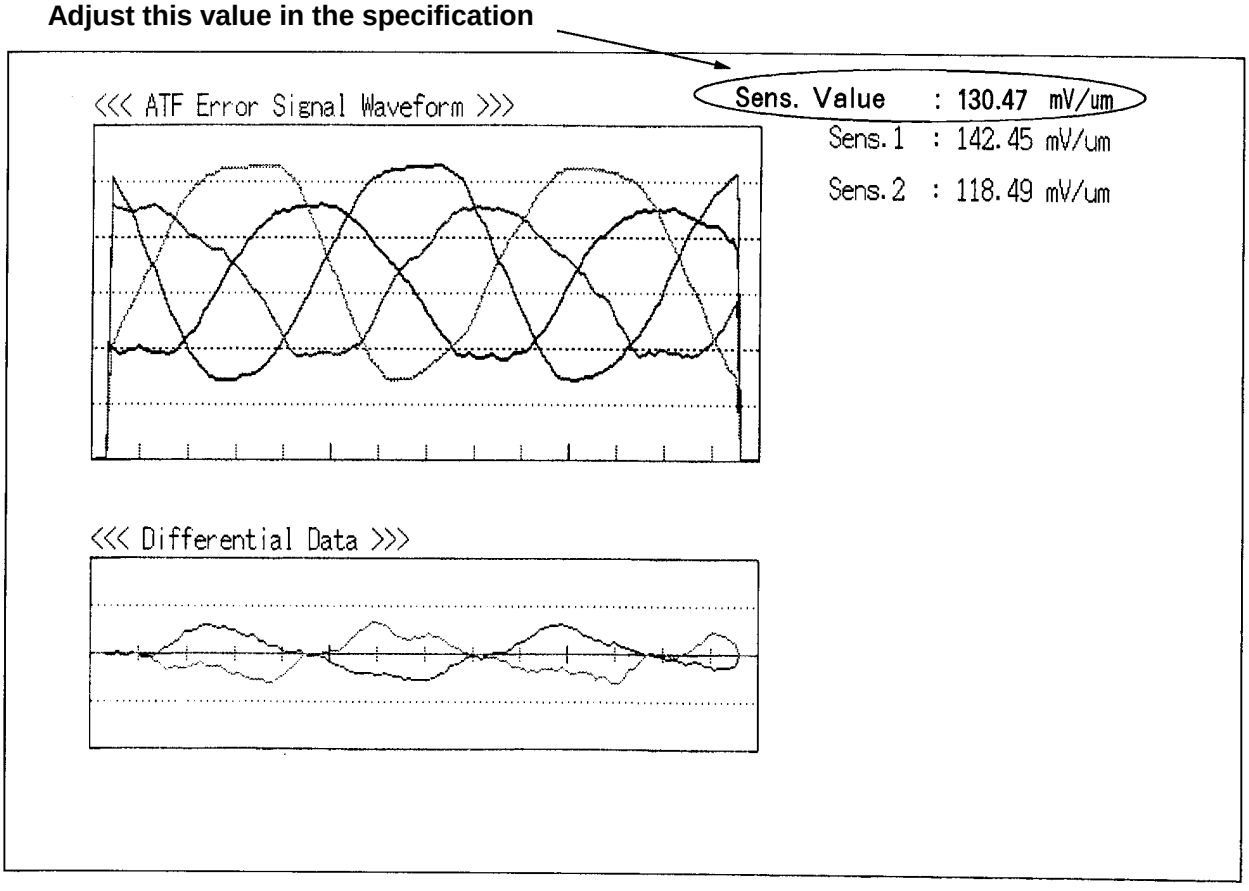

5-38. Self-Recording Playback Envelope Waveform Confirmation

SPEC	V1/Vmax, V2/Vmax, V3/Vmax ≥ 0.8
TEST POINT	TP16:R/P ENV (RF Board:H4) TP1 :TRIG/RP HSW (RF Board:H4)
ADJUSTMENT	S1 and T1 Post Height
MODE	PLAY
TAPE	Blank Tape
M.EQ	Oscilloscope
TOOL	VFK1149(Post Driver)

1. Record the color bar signal.
2. Play back the recorded portion and confirm that the envelope output is within specification
3. If out of specification, perform the Envelope Waveform and LISTA adjustment again.

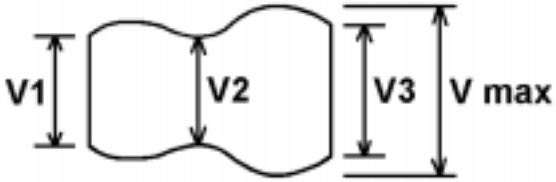

6. Mechanical Parts Replacement and Adjustment Procedures

GENERAL

When mechanical parts are replaced, pay attention to the following notes.

1. Turn power off before replacing any part.
2. If any adjustment is required after replacing parts, perform the required adjustments.
3. Use proper fixture tools.
4. Make sure to clean the parts after replacement, Also when the mechanical parts are replaced, follow the replacement procedure.

6-1. Cylinder Unit Replacement

(Removal)

1. Remove the T1 Guide and Cleaning Arm Unit (Refer to item 11-8).
2. Disconnect the connector P5002 and P5003 on the Head Buffer board. And remove the screw, which is fixed with flexible cable.

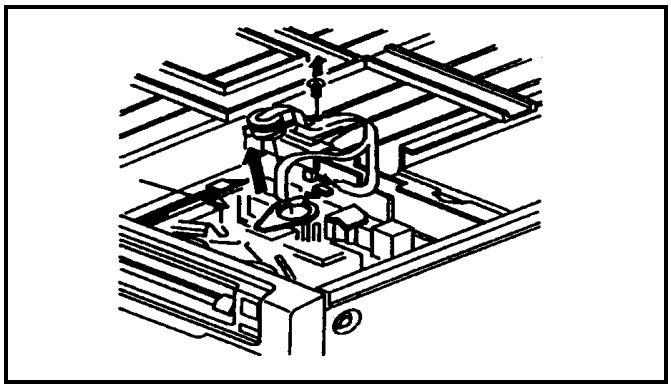

Fig. 6-1-1

Note: Be careful when removing the flexible cable from the connector. Refer to the way to remove the connector as shown in Figure 6-1-2.

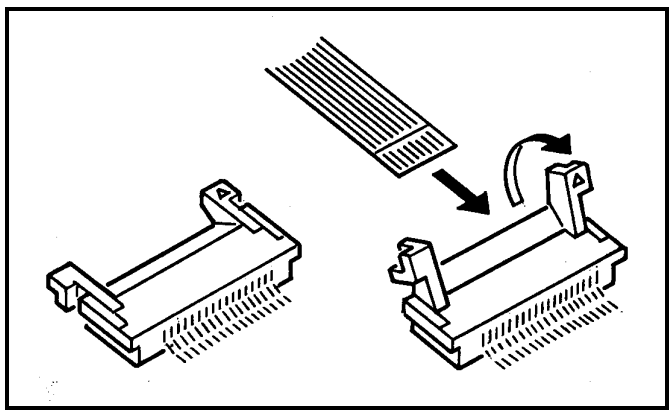

Fig. 6-1-2

3. Disconnect the connector P33 on Mech I/F P.C.Board at bottom of VTR. Then remove 3 screws (with spring) from the Cylinder unit, and remove the Cylinder unit without touching any mechanical part.

Note: Do not touch the cylinder surface by finger directly.

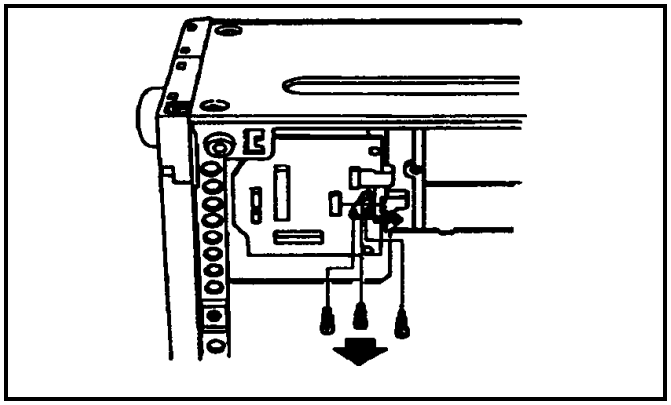

Fig. 6-1-3

(Installation)

1. Install a Cylinder unit as reverse order of its removal.

Note: Set the Mechanical Chassis pins are matched with the specified cylinder holes on the bottom of the cylinder.

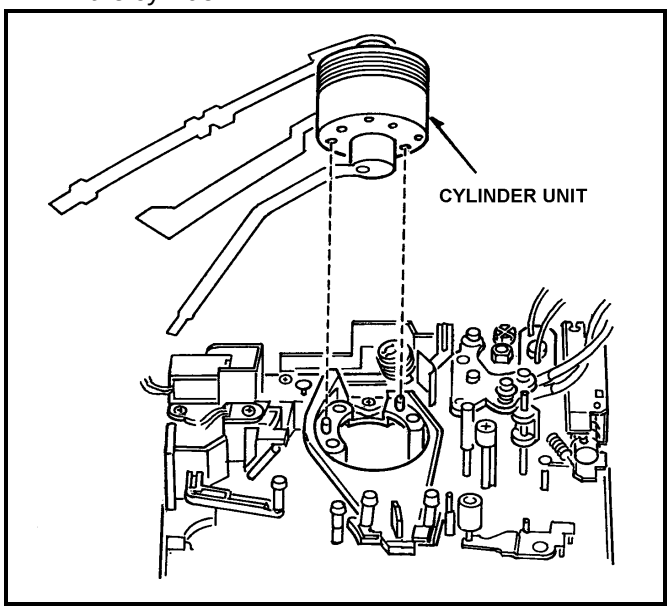

Fig. 6-1-4

2. After installing T1 Guide, T1 Guide position adjustment is necessary (Refer to adjustment procedure of item 6-1-3).

6-1-2. Cleaning Arm Unit Replacement

(Removal)

1. Unscrew the **2 screws (A)** to remove the T1 Guide as shown in Figure 6-1-5.
2. Pick up **the tip portion (B)** of Cleaning Arm Unit and remove the spring from Cleaner Arm Unit. Then remove the Cleaning Arm Unit as shown in Figure 6-1-5.

(Installation)

1. Install the cleaning Arm Unit, then hang the spring on Cleaning Arm Unit.
2. Install the T1 Guide and tighten **2 screws (A)**.
3. Press the iron core of the Cleaner Solenoid and confirm that the Cleaner Roller is rotated when the cylinder is rotated.
4. T1 Guide position adjustment should be performed.

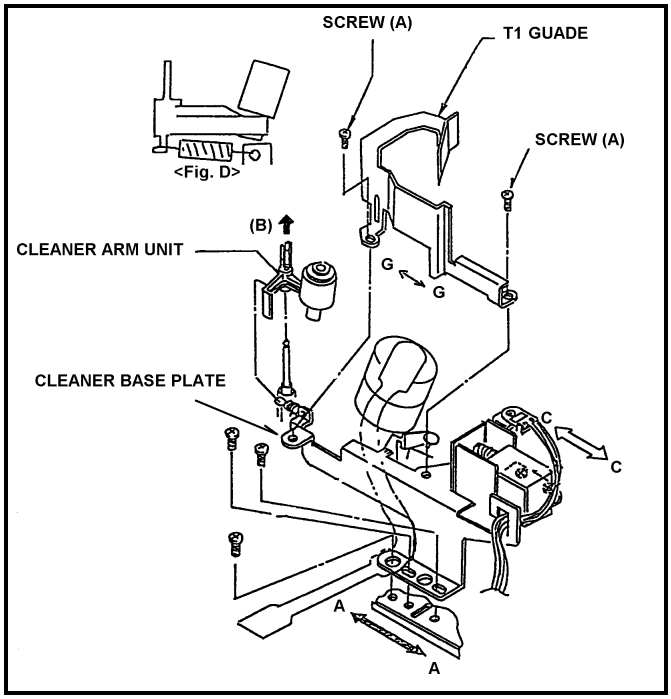

Fig. 6-1-5

6-1-3. T1 Guide Position Adjustment

Place the unit in Loading completion mode without tape.

< How to Make the No Tape Loading >

- Open the “SERVO ADJUST” menu in the Service menu.
- Select the item “T TORQUE” and press the Search button for making the loading condition. And turn power to off.

1. Observe the **clearance (B)** between T1 Guide and T1 post as shown in Figure 6-1-6. And make sure that it is within **0.2 to 0.5 mm**.
2. If not, loosen the **2 screws (A)** and adjust the position of T1 Guide by moving to arrow direction (G ⇔ G) so that the **clearance (B)** is within specification. And tighten the **2 screws (A)**.

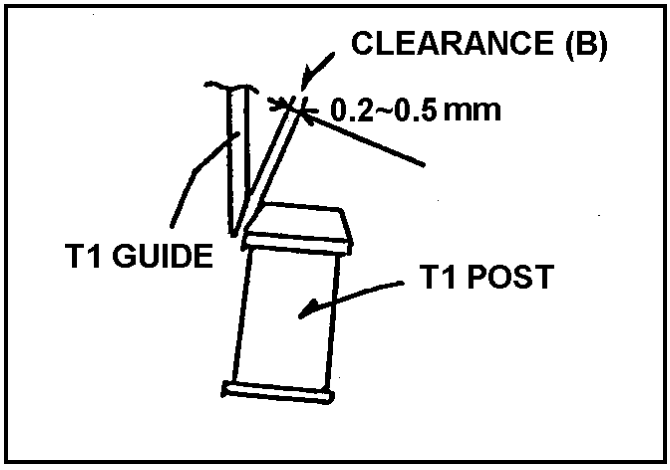

Fig. 6-1-6

6-1-4. Adjustment Flow Chart after Cylinder Unit Replacement

1. Adjust following items after Cylinder Unit replacement.

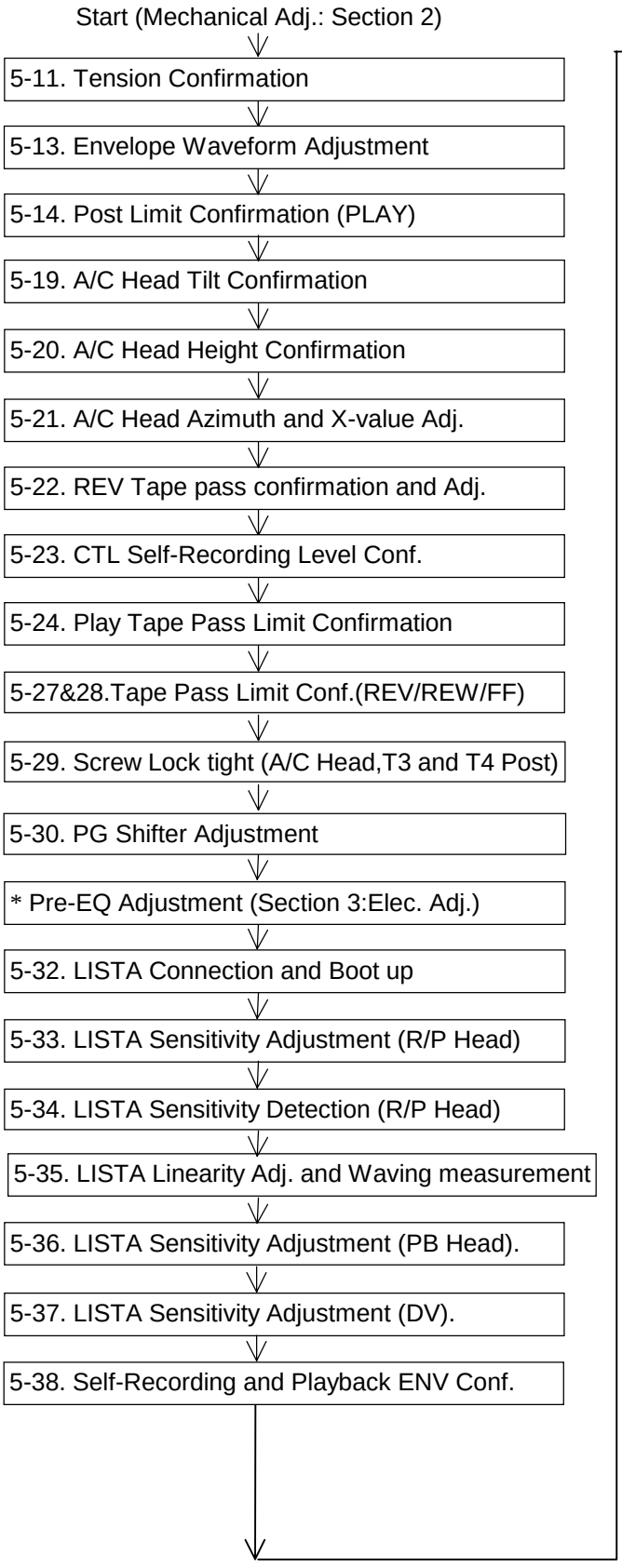

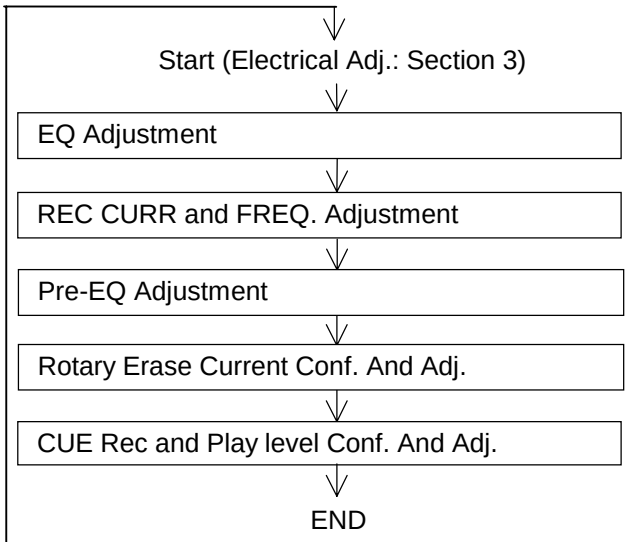

NOTE: EQ, REC CURR and REC FREQ adjustment can be executed Automatically by use AUTO software and Tool.

NOTE: For the PG Shifter Adjustment, release hand from the search button after changing the PG Shifter value at right of “PG SHIFT” on the monitor. If the value is not changed for a long time, tape error or ITI envelope lack may be occurred.

6-2. A/C Head Replacement

6-2-1. Replacement

✶ Required tools:
Nut Driver (5.5m/m)(VFK1150)
Hex Driver (VFK1148)
Hex Wrench (VFK1190)

(Removal)

1. Remove the Top Plate.
2. Loosen the **hex. screw (B)** and remove the **Nut (C)**. Pick up the Head Height Adjustment Spring and then remove the A/C Head Unit as shown in Figure
   Point: Memorize the height of Nut (C) before removing the **Nut (C)**,

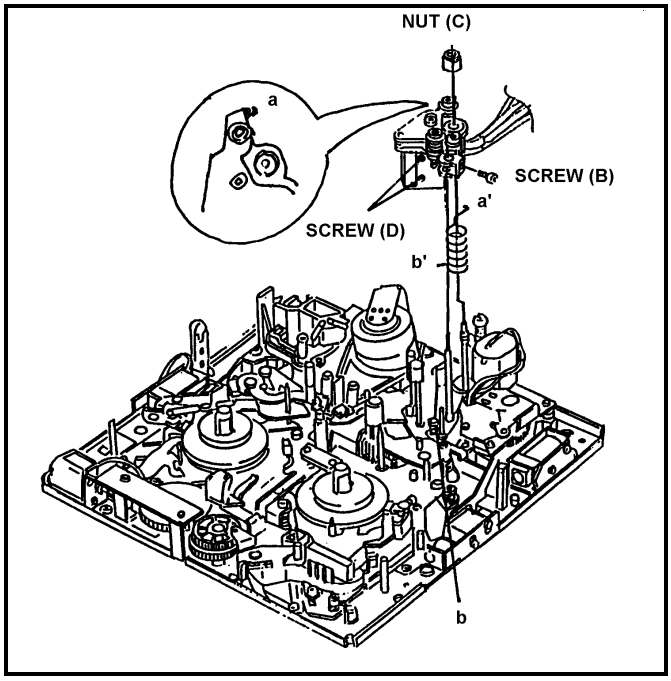

Fig. 6-2-1

3. Remove the **2 screws (A).** and disconnect the 2 **connectors P1** on the A/C Head I/F P.C.Board and **P30** on the Mech I/F P.C.Board, and then remove the A/C Head from the A/C Head Plate.
4. Remove **2 screws (D)** to remove the Shield Cover as shown in Figure 6-2-1.
5. Unsolder the lead wires as shown in Figure 6-2-3.

Note: When unsolder the lead wires, do not unsolder all at the same time.)

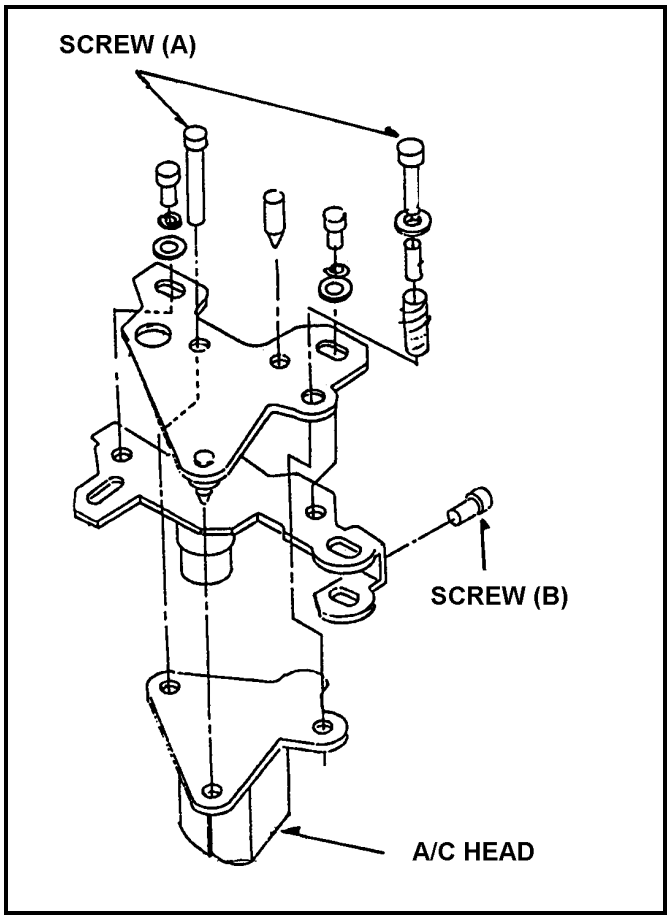

Fig. 6-2-2

(Installation)

1. Remove the Shield Case from the New A/C Head and solder the lead wires to New A/C Head (Refer to Figure 6-2-3).
2. Re-install the shield case to A/C Head.
3. Install the A/C Head to A/C Head Plate and tighten **2 screws (A)** so that A/C Head is parallel to A/C Head Plate.
4. Install the A/C Head Unit.
5. Put on the Head Height Adjustment Spring and tighten **the Nut (C)**.
6. Clean the surface of the A/C Head.
7. Perform the A/C Head adjustment.

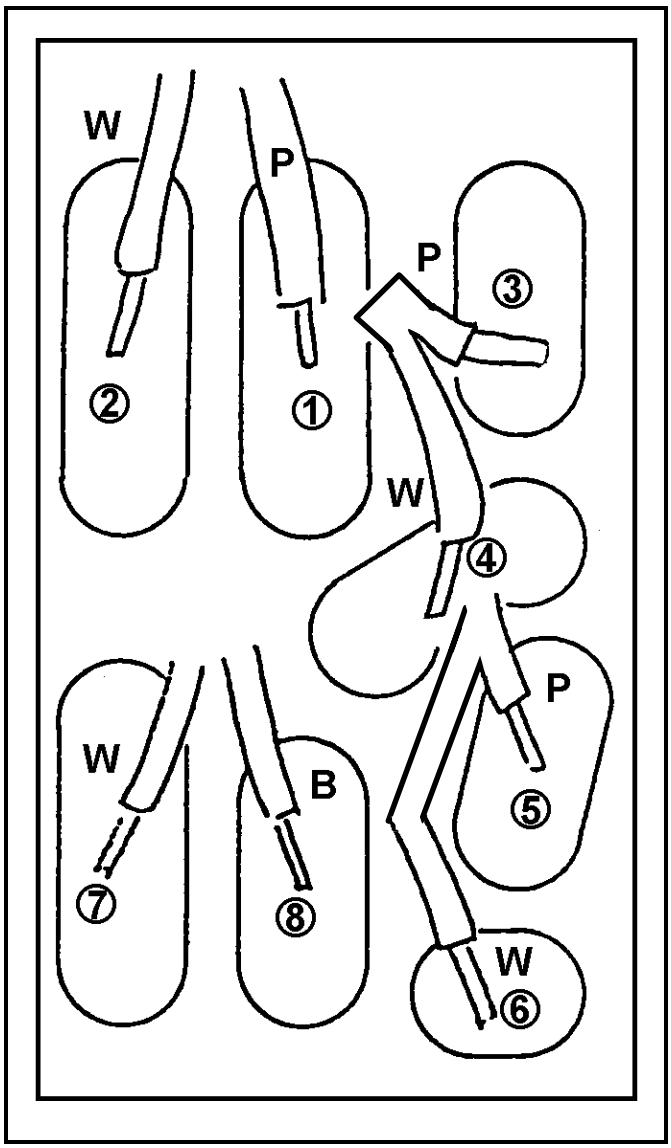

Fig. 6-2-3

A/C Head Side	Cable Color		Connector No.
1	PINK	YELLOW	P1
2	WHITE		
3	PINK	RED	
4	WHITE		
5	PINK	GREEN	
6	WHITE		
7	WHITE	YELLOW	P30
8	BLACK		

6-2-2. Adjustment Flowchart After A/C Head Replacement

1. After installing, Mechanical and Electrical Adjustments should be performed.
   NOTE: The **hex screw (B)** is kept loose until the A/C Head Height Adjustment is completed.
2. After replacing the A/C Head, perform the following steps.

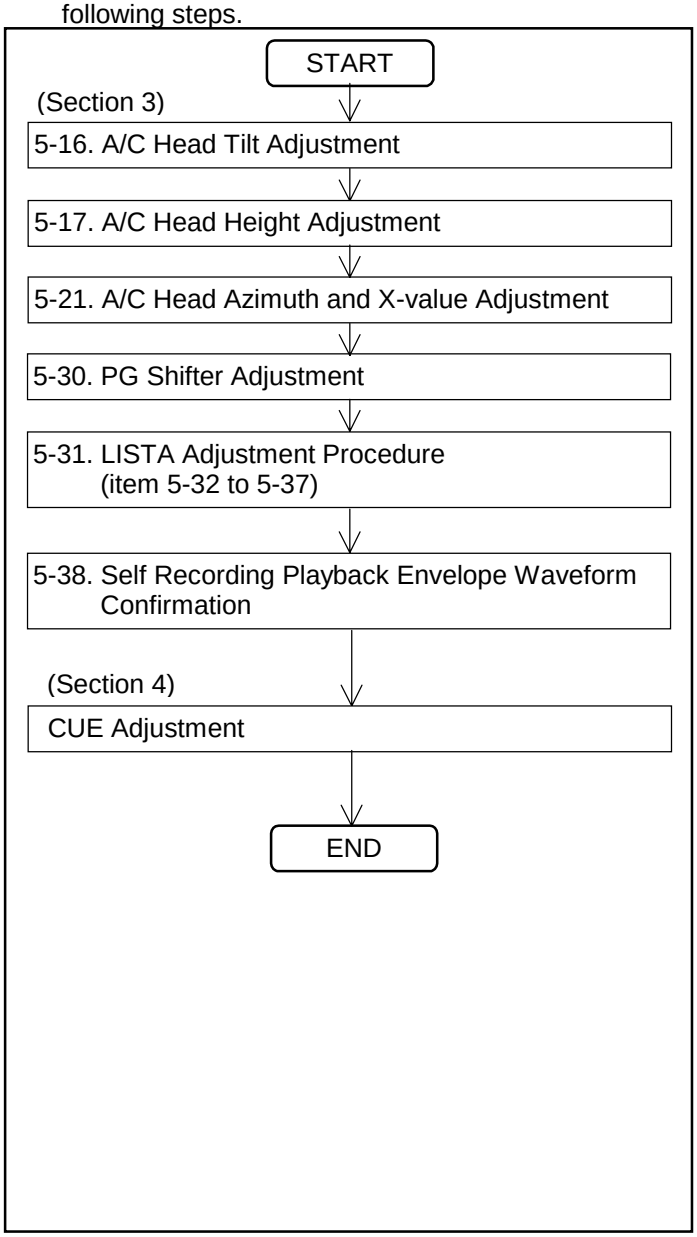

6-3. Supply Reel Rotor Unit and Take Up Reel Rotor Unit Replacement

(Removal)

1. Remove the Top Panel (Refer to item [2-1. Removal of Top Panel]).
2. Remove the Front Loading Unit (Refer to item [2-5. Removal of Front Loading Unit]).
3. Remove the Bottom Panel (Refer to item [2-2. Removal of Bottom Panel]).
4. Disconnect the connector P34 and P35 on the Mech I/F P.C.Board as shown in Figure 6-3-1.
5. Move the S1 post to loading direction by manual ejecting method until the screw (C) can removing position.
6. Confirm the supply and Take Up Brake are not release.
7. Press the iron core of M stopper solenoid to release the M stopper.
8. Remove the 4 screws (C), (D) and (E) as shown in Figure 6-3-2.
9. Remove the Supply and Take Up Reel Rotor Unit and Reel Outer Rail.

   Note: Memorized the groove position of Reel Base, which inserted the pin of Drive Arm Unit.

(Installation)

1. Through in the Reel Outer Rail to New Supply and Take Up Reel Rotor Unit.
2. Hang on the Reel Rotor Unit to Reel Inner Rail and Install the Reel Rotor Unit then the pin of Drive Arm Unit should be matched with groove position of Reel Base as shown in Figure 6-3-3.
3. Install the 4 screws (C), (D) and (E).
4. Confirm that the Reel Rotor Unit moving smoothly on the Rail by hard.
5. Move the Reel Rotor Unit to front side by hand and then pull up the iron core of M stopper solenoid for operating M stopper.
6. Set the unloading condition by turn the Emergency shaft counter-clockwise.
7. Connect the Flexible Cable to Connector P34 and P35 on the Mech I/F P.C.Board.
8. Adjust the Motor Torque Offset value (Refer to item 1-1 of section 3).
9. Confirm that the Tension value on playback mode (Refer to item 5-11).

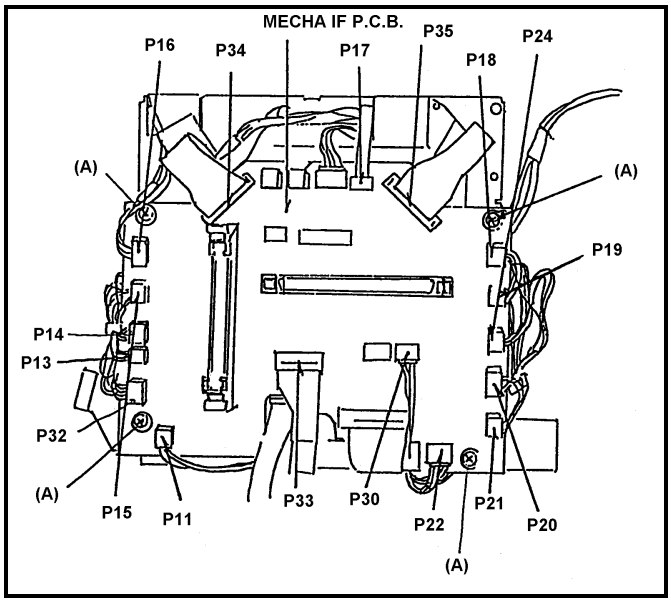

Fig. 6-3-1 Connection of S & T Reel Rotor Unit

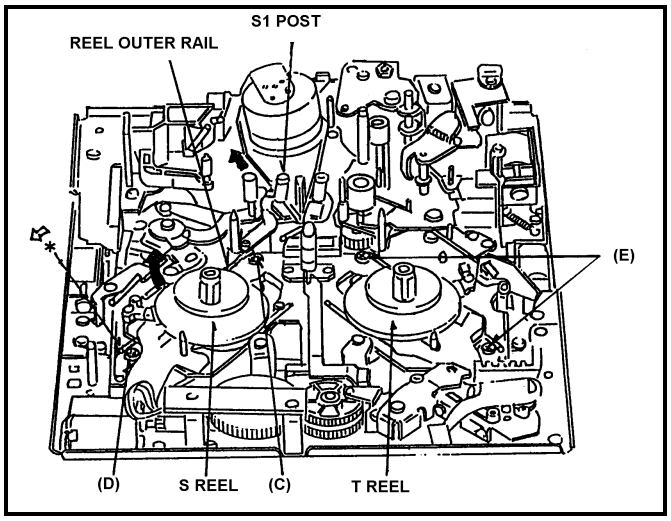

Fig.6-3-2 Removal of S & T Reel Rotor Unit

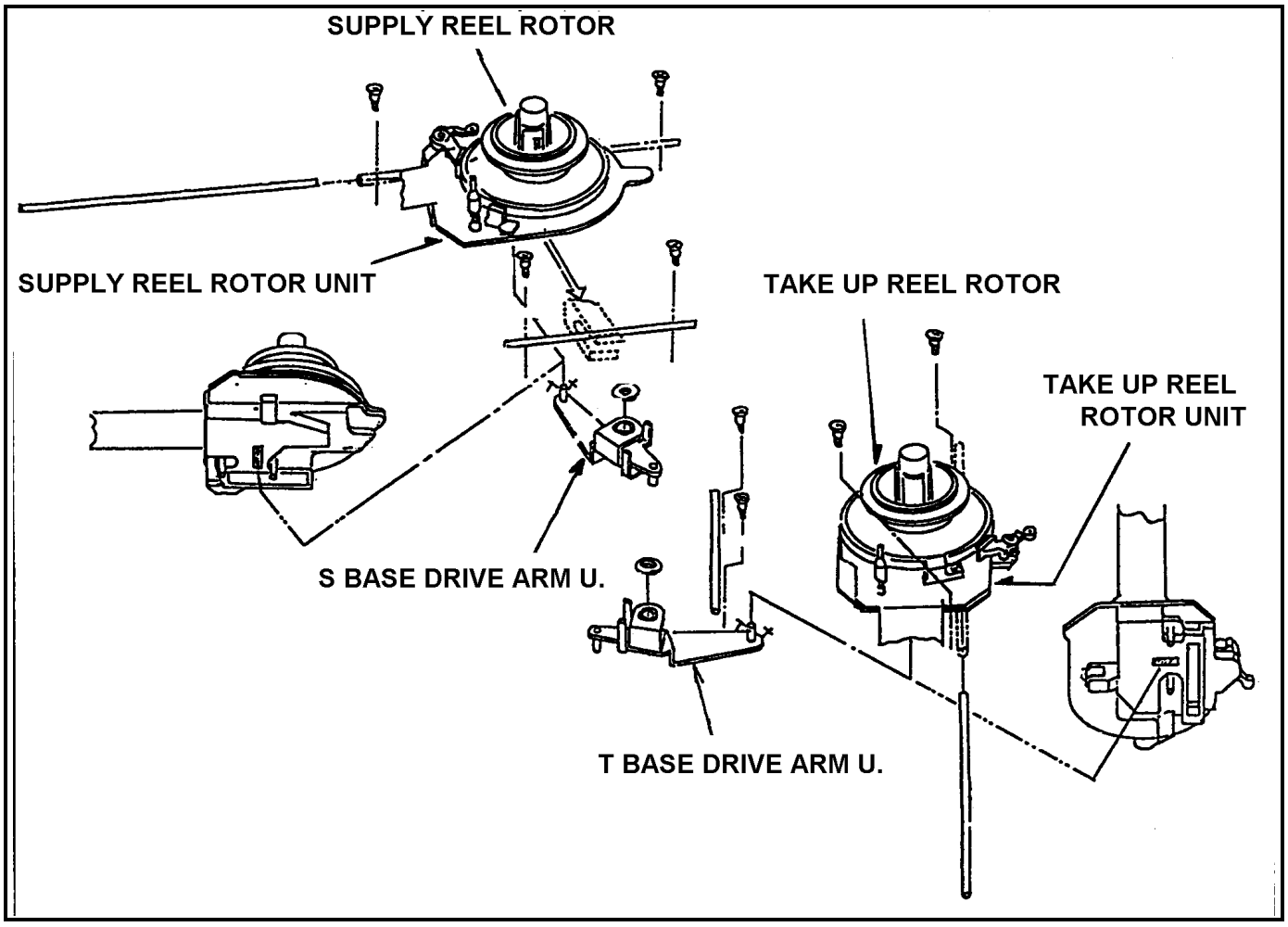

Fig.6-3-3 Installation of S & T Reel Rotor Unit

6-4. Supply and Take Up Brake Arm Unit Replacement

(Removal)

1. Remove the Top Panel.
2. Remove the Front Loading Unit.
3. Press the iron core of Brake Solenoid for release the Brake.
4. Remove the cut washers (A) and remove the supply and Take Up Brake Arm Unit as shown in Figure 6-4-1.

(Installation)

1. When install the new Brake Arm Unit first, hang on the Brake Arm Spring as shown in Figure 6-4-1.
2. Follow the previous steps in reverse order.
3. Main Brake Torque confirmation is required (Refer to item 5-3).
4. Confirm that the Tension value on the Playback mode (Refer to item 5-11).

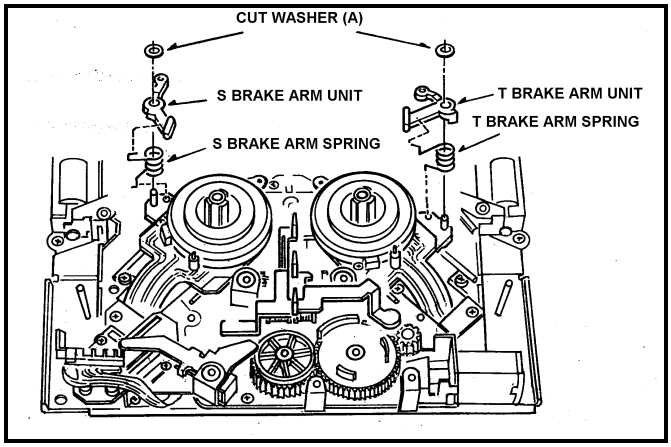

Fig.6-4-1 Removal of S & T Break Arm Unit

6-5. Supply Brake Solenoid Replacement and Adjustment

(Removal)

1. Remove the Top Panel.
2. Remove the Front Loading Unit.
3. Remove the Bottom Panel.
4. Disconnect the connector P15 on the Mech I/F P.C.Board as shown in Figure 6-3-1.
5. Unscrew the 2 screws (A) and remove the Supply Brake Solenoid Base Unit as shown in Figure 6-5-1.
6. Unscrew the 2 screws (B) and remove the supply Brake Solenoid from Supply Brake Solenoid Base Unit as shown in Figure 6-10-1.

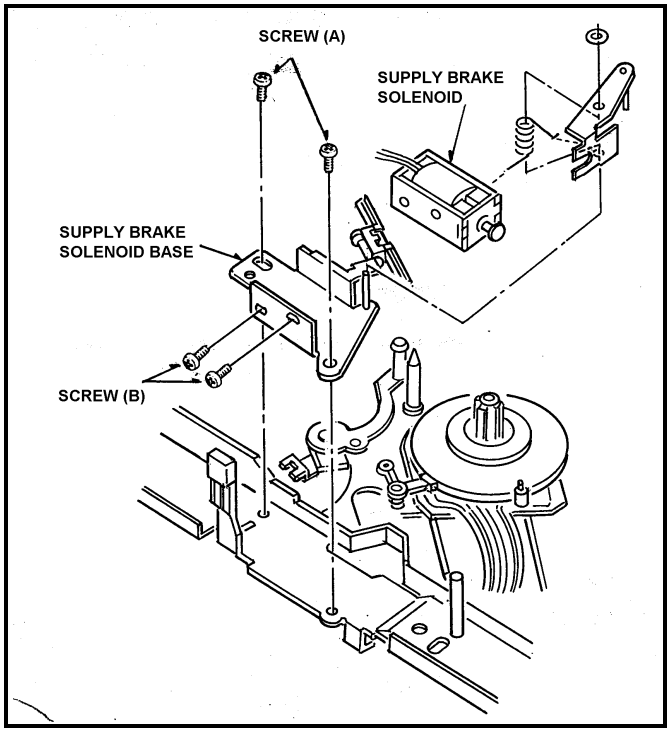

Fig. 6-5-1 Removal of Supply Brake Solenoid

(Installation)

1. Install the new supply Brake Solenoid follow the removal steps in reverse order.

Note: Hang on the Supply Brake Spring as shown in Figure 6-6-1.

2. Adjustment is required after installation.

(Adjustment)

1. Place the reels in the M cassette size position.
2. Observe the clearance (A) between Brake pad and it's turntable as shown in Figure 6-5-2. And make sure that it is within 0.2 to 0.5mm.
3. If not, loosen the 2 screws (A), which fixed supply and Take Up Brake Solenoid Unit. And adjust the position of Brake Solenoid Unit by moving arrow direction so that the clearance (A) is within specification. And tighten the 2 screws (A).
4. After adjustment, change the reel position to S and L cassette size, and confirm that the clearance (A) is within specification.

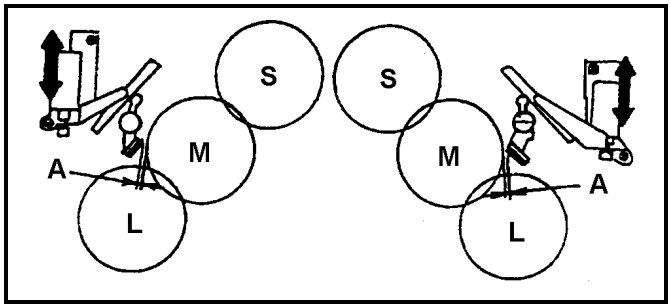

Fig.6-5-2 Brake Solenoid Adjustment

6-6. Take Up Brake Solenoid Replacement and Adjustment

(Removal)

1. Remove the Top Panel.
2. Remove the Front Loading Unit.
3. Remove the Bottom Panel.
4. Disconnect the connector P18 on the Mech I/F P.C.Board. as shown in Figure 6-3-1.
5. Unscrew the 2 screws (A) and remove the Take Up Brake Solenoid Base Unit as shown in Figure 6-6-1.
6. Unscrew the 2 screws (B) and remove the Take Up Brake Solenoid from Take Up Brake Solenoid Base Unit as shown in Figure 6-6-1.

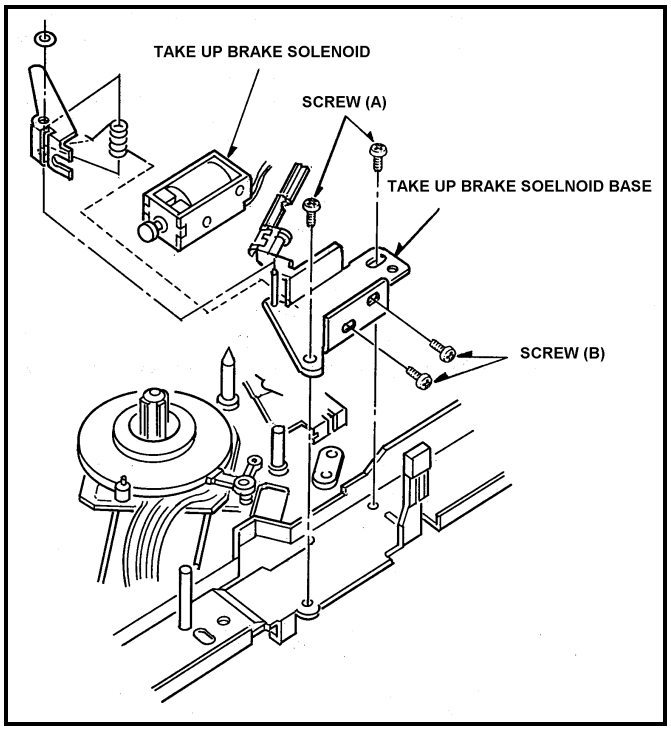

Fig.6-6-1 Removal of Take Up Brake Solrnoid

(Installation)

1. Install the new Take up Brake Solenoid follow the removal steps in reverse order.

Note: Hang on the Take up Brake Spring as shown in Figure 6-6-1.

2. After installation, position adjustment should be performed as follows.

(Adjustment)

Please adjust the position of Take up Brake Solenoid Unit follow the adjustment procedure, which is described item 6-5.

6-7. Pinch Solenoid Replacement

(Removal)

1. Remove the Top Panel.
2. Remove the Front Loading Unit.
3. Remove the Bottom Panel.
4. Disconnect the connector P20 on the Mech I/F P.C.Board as shown in Figure 6-3-1.
5. Unscrew the 2 screws (A) and remove the Pinch Solenoid Unit as shown in Figure 6-7-1.
6. Unscrew the 2 screws (B) and remove the Pinch Solenoid Angle as shown in Figure 6-7-1.
7. Unscrew the 2 screw s (C) and remove the Pinch Solenoid from the Pinch Solenoid Base.

(Installation)

1. Install the new Pinch Solenoid follow the removal steps in reverse order.
2. After installation, Pinch Solenoid Position Adjustment is required (Refer to item 5-2).

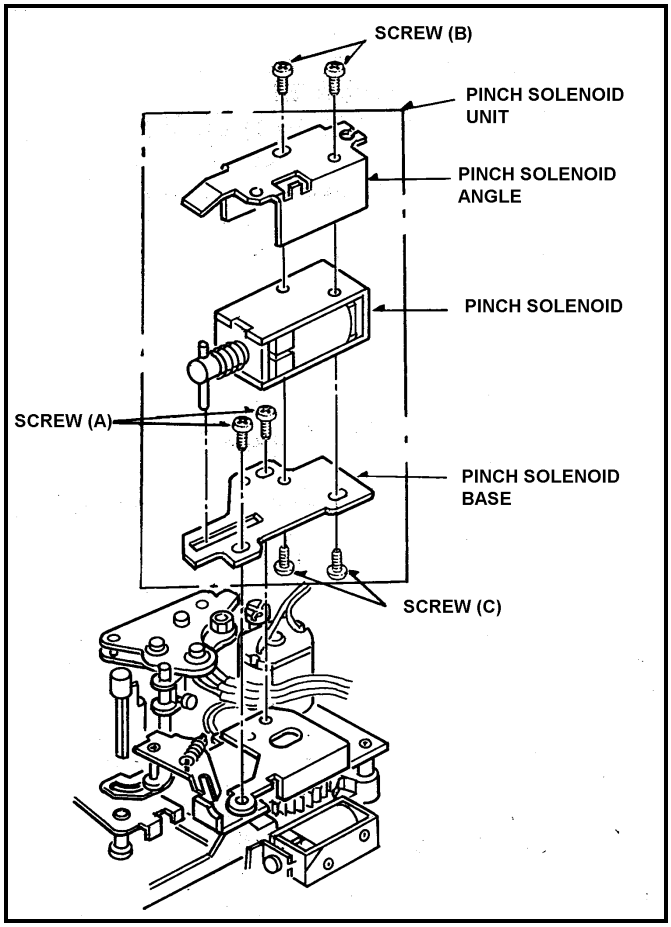

Fig.6-7-1 Removal Pinch Solenoid

6-8. Pinch Arm Unit Replacement

(Removal)

1. Remove the Top Panel.
2. Remove the Front Loading Unit.
3. Remove the Bottom Panel.
4. Disconnect the connector P20 on the Mech I/F P.C.Board as shown in Figure 6-3-1.
5. Remove the Pinch Solenoid Unit (Refer to item 6-9, then hang off the Pinch Solenoid Lever as shown in Figure 6-8-1.
6. Remove the cut washer (A) and remove the Pinch Solenoid Lever as shown in Figure 6-8-1.
7. Remove the cut washer (B) and remove the Pinch Arm Unit as shown in Figure 6-8-1.

(Installation)

Install the new Pinch Arm Unit follow the removal steps in reverse order then Pinch Solenoid Position Adjustment is necessary (Refer to item 5-2).

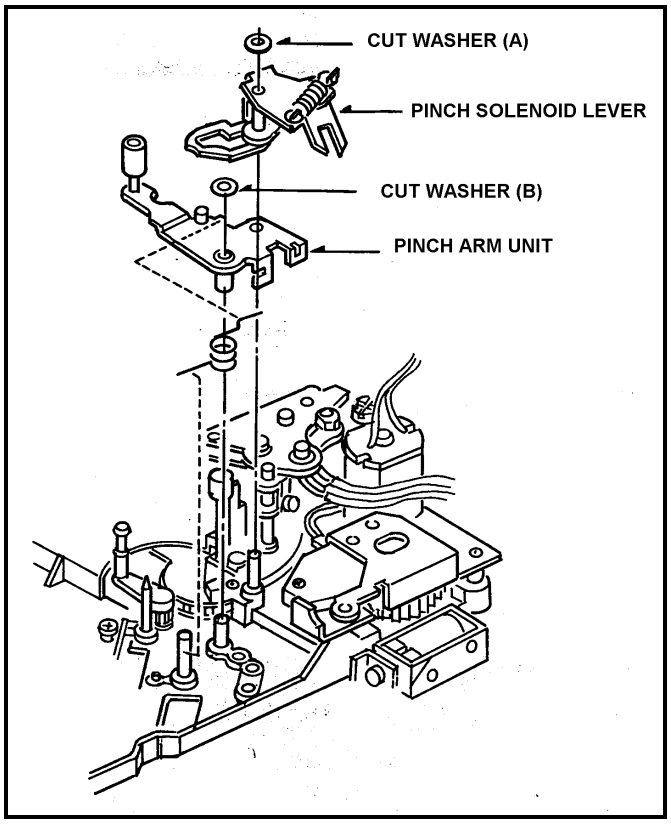

Fig.6-8-1 Removal of Pinch Arm Unit

6-9. Loading Motor Unit Replacement

(Removal)

1. Remove the Top Panel.
2. Remove the Front Loading Unit.
3. Remove the Bottom Panel.
4. Disconnect the connector P21 on Mech I/F P.C.Board as shown in Figure 6-3-1.
5. Remove the Pinch Solenoid Unit (Refer to item 6-7).
6. Remove the Pinch Solenoid Lever. (Refer to item 6-8).
7. Unscrew the screw (B), and remove the Emergency Shaft as shown in Figure 6-9-1.
8. Unscrew the 2 screws (C) and remove the Loading Motor Neutral Unit as shown in Figure 6-9-1.
9. Unscrew the 2 screws (D) and remove the Loading Motor Unit as shown in Figure 6-9-1.

(Installation)

1. Install the new Loading Motor Unit to Loading Motor Neutral Unit by tightening 2 screws (D).
2. Install the Loading Motor Neutral Unit by tightening the 2 screws (C), then be careful that the pin of Mode SW Unit should be matched to groove position of main Cam Gear.
3. Install the Emergency Shaft by tightening the screw (B).
4. Install the Pinch Solenoid Unit and after installation it, Pinch Solenoid Position adjustment is required. (Refer to item 5-2).
5. Connect the connector P21 on the Mech I/F P.C.Board. as shown in Figure 6-3-1.

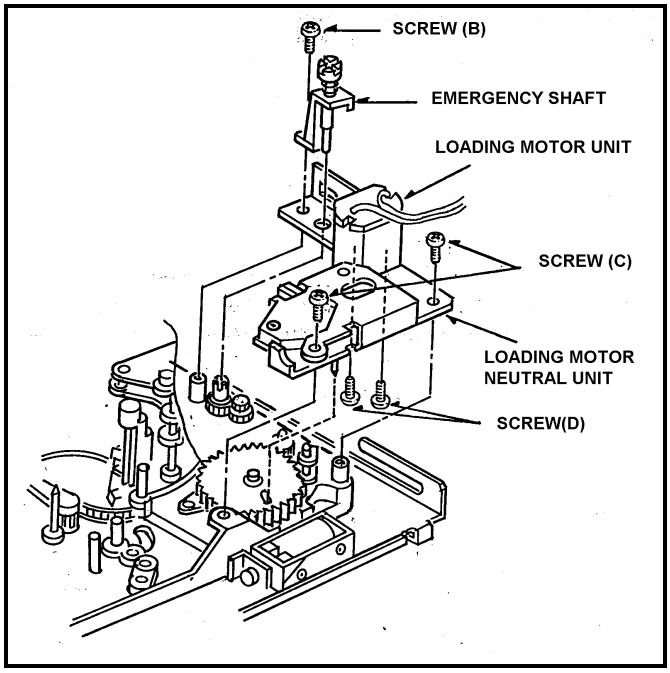

Fig. 6-9-1 Removal of Loading Motor

6-10. Mode Select Switch Unit Replacement

(Removal)

1. Remove the Top Panel.
2. Remove the Front Loading Unit.
3. Remove the Bottom Panel.
4. Disconnect the connector P22 on the Mech I/F P.C.Board as shown as Figure 6-3-1.
5. Remove the Pinch Solenoid Unit and Loading Motor Neutral Unit (Refer to item 6-9).
6. Remove the screw (D) and remove the Mode Select Switch Unit from Loading Motor Neutral Unit as shown in Figure 6-10-1.

(Installation)

1. Install the New Mode Select Switch Unit follow the removal steps in reverse order (Please refer to item [6-9. Loading Motor Unit Replacement]).

Note: Be careful the pin of Mode Switch Unit should be matched to groove of Main Cam Gear.

2. After install the Pinch Solenoid Unit, Pinch Solenoid Position adjustment is required (Refer to item 5-2).

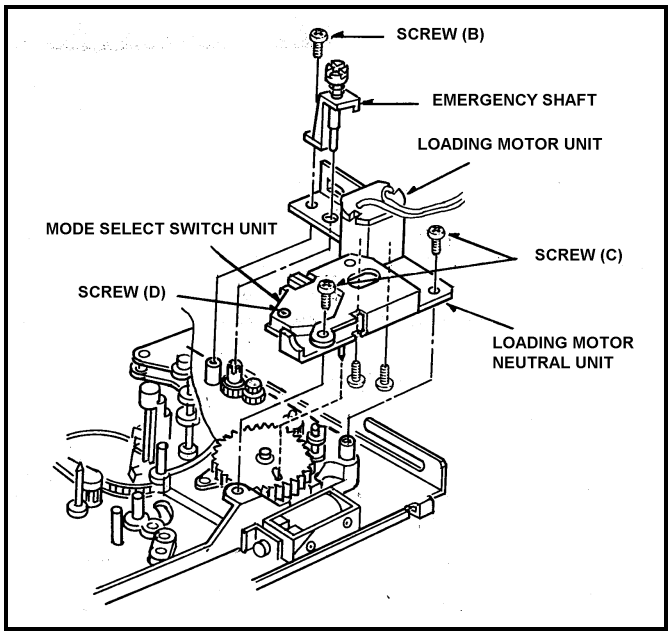

Fig.6-10-1 Removal of mode Select Switch Unit

6-11. Main Cam Gear Replacement

(Removal)

1. Remove the Top Panel.
2. Remove the Front Loading Unit.
3. Remove the Pinch Solenoid Unit (Refr to item 6-7) and Loading Motor Neutral Unit (Refer to item 6-9).
4. Remove the Main Cam Gear as shown in Figure 6-11-1.

(Installation)

1. Install the Main Cam Gear, then the pin of Main Cam Arm Unit (*) should be matched with the groove position of Main Cam Gear as shown in Figure 6-11-1.
2. Follow the removal steps in reverse order.
3. After installation, Pinch Solenoid Position Adjustment is required (Refer to item 5-2).

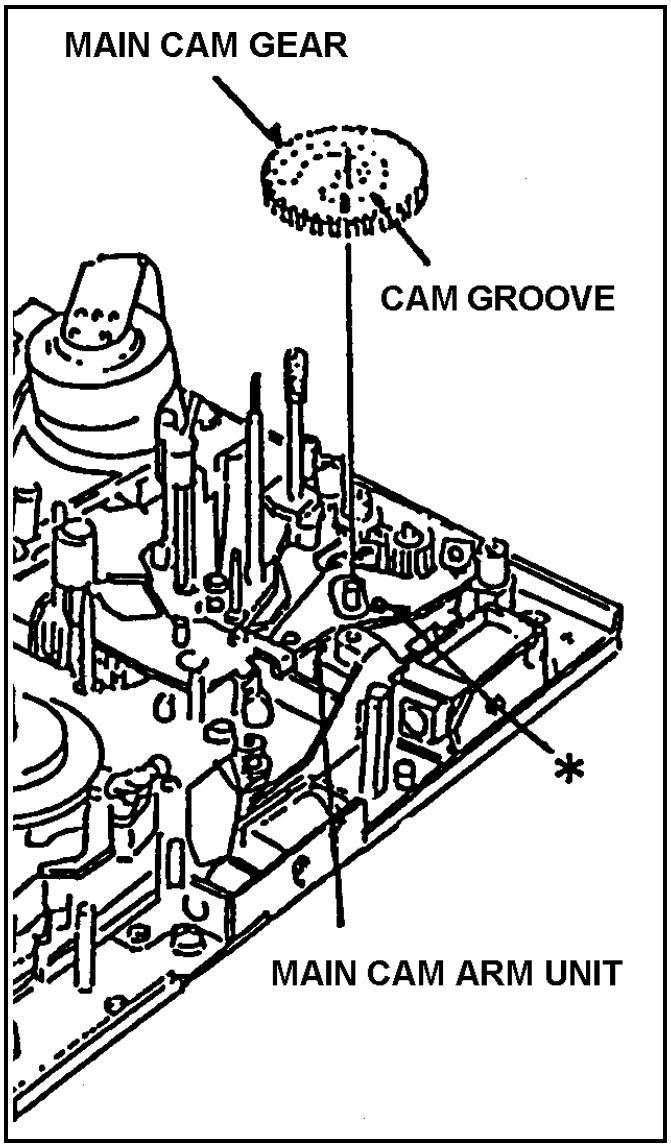

Fig.6-11-1 Removal of Main Cam Gear

6-12. S5 Post Base Unit Replacement

(Removal)

1. Remove the Top Panel.
2. Remove the Front Loading Unit.
3. Unscrew the screw (A) and remove the S5 Post Base Unit as shown in Figure 6-12-1.

(Installation)

1. Install theS5 post Base Unit follow the removal steps in reverse order, then be careful the S5 Post Base Unit is install to mech chassis as shown in Figure 6-12-1.
2. After installation, Post Height pre-adjustment (Refer to item 5-4) and Linearity adjustment (Refer to item 5-12 [Tape Pass Adjustment Procedure]) should be performed.

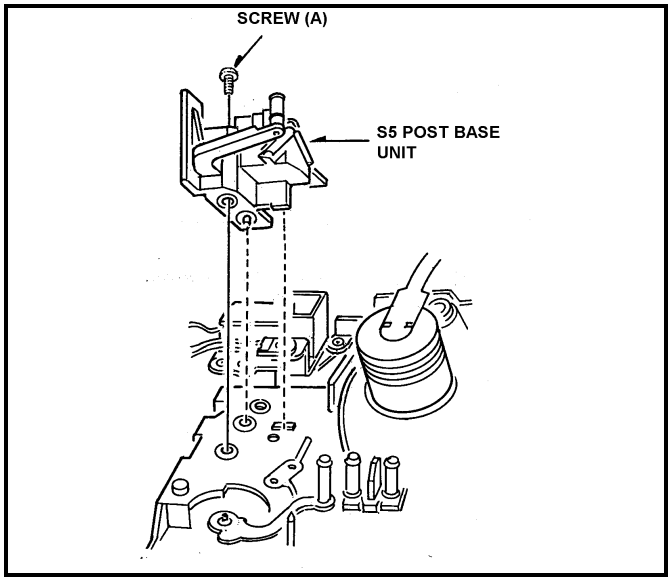

Fig.6-12-1 Removal of S5 Post Base Unit

6-13. Tension Arm Unit Replacement

(Removal)

1. Remove the Top Panel.
2. Remove the Front Loading Unit.
3. Remove the Cut Washer (A) and hang off the Tension Regi Spring, then remove the Tension Arm Unit as shown in Figure 6-13-1.

(Installation)

1. Install the new Tension Arm Unit follow the removal steps in reveres order.
2. After installation, Tension Arm Adjustment should be performed the following steps.

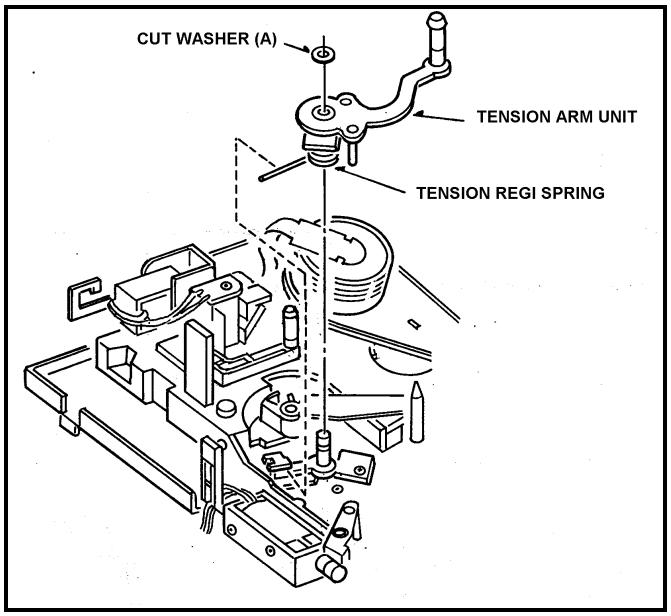

Fig.6-13-1 Removal of Tension Arm Unit

Tension Arm Adjustment Flowchart

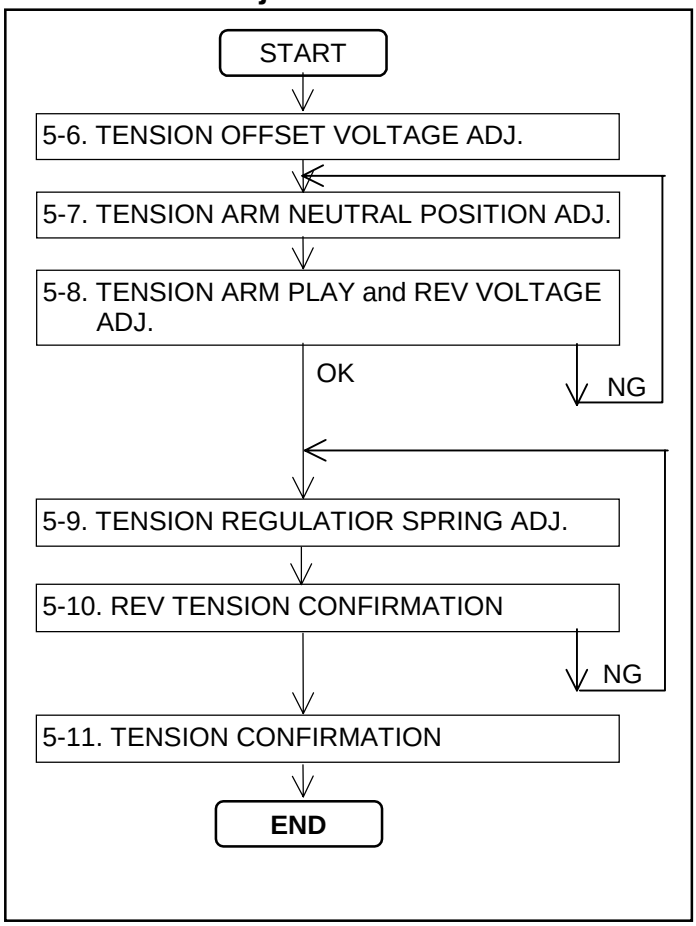

6-14. S1 Post Loading Arm Unit Replacement and Adjustment

(Removal)

1. Remove the Top Panel.
2. Remove the Front Loading Unit.
3. Remove the S5 Post Base Unit (Refer to item 6-12).
4. Remove the Tension Arm Unit(Refer to item 6-13).
5. Unscrew the screw (A) and remove the S1 Post from Loading Rail as shown in Figure 6-14-1.
6. Remove the Cut Washer (B) and remove the S1 Loading Arm Unit as shown in Figure 6-14-1.

(Installation)

1. Install the new S1 Loading Arm Unit follow the removal steps in reverse order, then S1 Post Loading Arm Unit Phase Adjustment should be performed as follows.
2. After installation, confirm that the S1 Post moving smoothly on the Loading Rail.
3. Tension Arm (Refer to item 5-5), Post Height Pre-Adjustment (Refer to item 5-4) and Linearity Adjustment. (Refer to item 5-12 [Tape Pass Adjustment Procedure]) should be performed.

(Adjustment)

1. When install the S1 Post Loading Arm Unit, then the hole (A) should be matched hole (B) as shown in Figure 6-14-1.

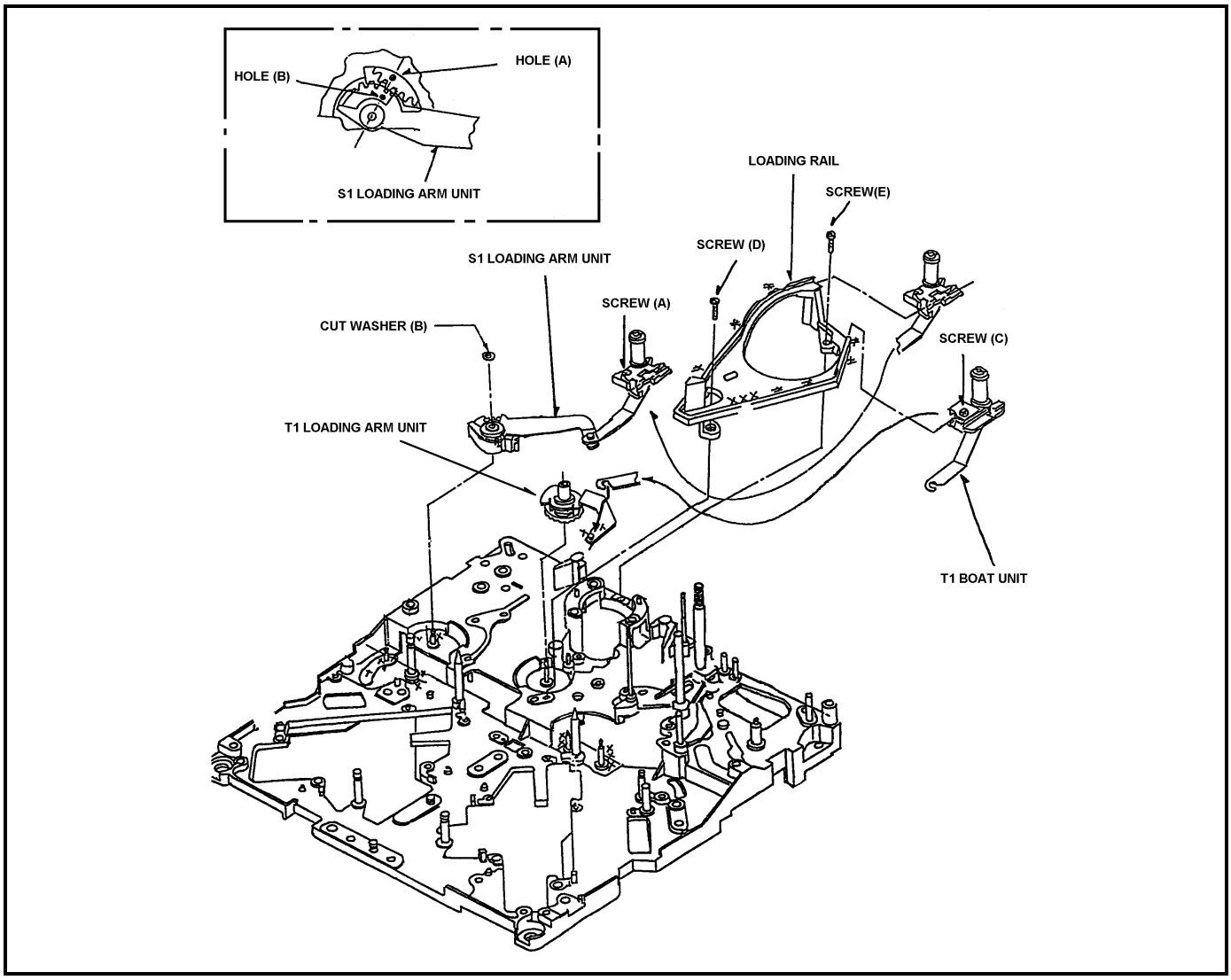

Fig.6-14-1 Removal of S1 Post Loading Arm Unit

6-15. T1 Boat Unit Replacement

(Removal)

1. Remove the Top Panel.
2. Remove the Front Loading Unit.
3. Unscrew the screw (C) and remove the T1 Post from Loading Rail as shown in Figure 6-14-1.
4. Hang off the T1 Boat Unit from T1 Loading Arm Unit as shown in Figure 6-14-1.

(Installation)

1. Install the new T1 Boat Unit follow the removal steps in reverse order.
2. After installation confirm that the T1 Post moving smoothly on the Loading Rail.

Linearity adjustment (Refer to item 5-12 [Tape Pass Adjustment Procedure]) should be performed.

6-16. T1 Loading Arm Unit Replacement and Adjustment

(Removal)

1. Remove the Top Panel.
2. Remove the Front Loading Unit.
3. Remove the cylinder Unit (Refer to item 6-1).
4. Move the T1 Post to loading direction by manual ejecting method until the screw (D) can be removal position as shown in Figure 6-14-1.
5. Unscrew the 2 screws (A) and (C), then remove the S1 and T1 Post from Loading Rail as shown in Figure 6-14-1.
6. Unscrew the 2 screws (D) and (E), then remove the Loading Rail as shown in Figure 6-14-1.
7. Remove the T1 Loading Arm Unit as shown in Figure 6-14-1.

(Installation)

1. Install the T1 Loading Arm Unit follow the removal steps in reverse order, then Phase Adjustment should be performed as follows.

Note: This replacement should be performed simultaneously, replacement of Cylinder Unit. It is convenience for Replacement of T1 Loading Arm Unit.

(Adjustment)

1. When install the T1 Loading Arm Unit, then the hole (A) should be matched hole (B) as shown in Figure 6-16-1.
2. After installation confirm that the S1 and T1 Post moving smoothly on the Loading Rail.
3. Post Height Pre-adjustment (Refer to item 5-3) and Linearity adjustment (Refer to item 5-12 [Tape Pass Adjustment Procedure]) should be performed.

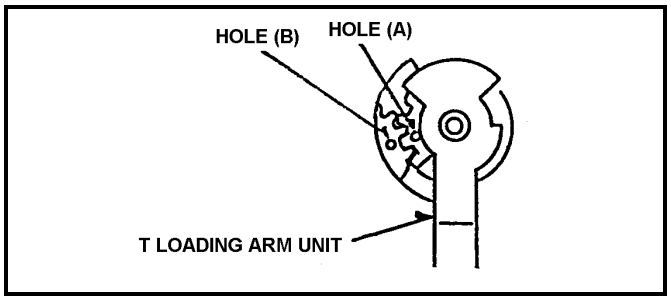

Fig.6-16-1 Phase Adjustment of T1 Lording Arm Unit

6-17. Cleaner Solenoid Replacement and Adjustment

(Removal)

1. Remove the Top Panel.
2. Remove the Front Loading Unit.
3. Disconnect the connector P11 on the Mech I/F P.C.Board.
4. Unscrew the 2 screws (A) and remove the Cleaner Solenoid Unit as shown in Figure 6-17-1.
5. Unscrew the 2 screws (B) and remove the Cleaner Solenoid as shown in Figure 6-17-1.

(Installation)

1. Install the new Cleaner Solenoid follow the removal steps in reverse order.
2. After installation, Cleaner Solenoid Position adjustment should be performed as follows.

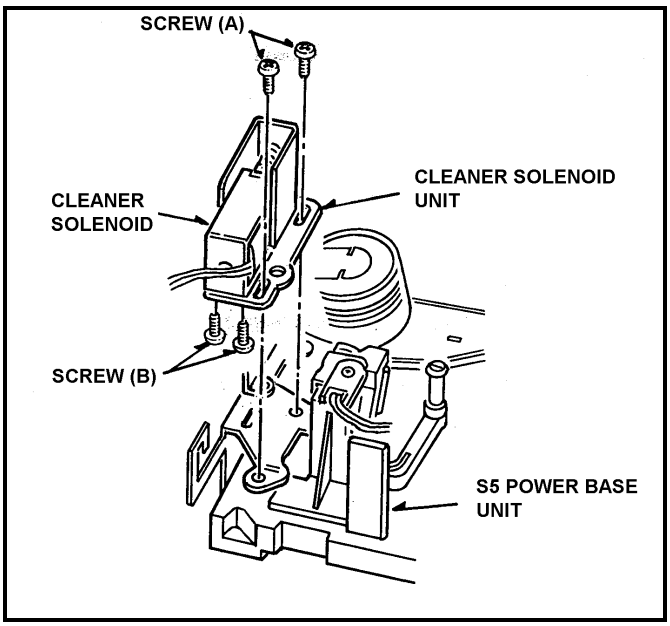

Fig.6-17-1 Removal of Cleaner Solenoid

6-17-1. Cleaner Solenoid Position Adjustment

✶ Tools Required : Eccentric Driver (VFK0357)

1. Press the iron core of Cleaner Solenoid.
2. Observe the clearance (D) between Cleaning Arm Unit and Cleaner Base Plate as shown in Figure 6-15-2. And make sure that it is within 0.5 to 0.7mm.
3. If not, loosen the 2 screws (A) and adjust the position of Cleaner Solenoid Unit by moving arrow direction (C⇔C) using the Eccentric drive so that the clearance (D) is within specification. And tighten the 2 screws.
4. After adjustment, confirm that as follow.
5. Press the iron core of Cleaner Solenoid and released it, then the Cleaning Roller is return to original position.
6. Press the iron core of the Cleaner Solenoid and confirm that the Cleaner Roller is rotated, when the Cylinder is rotated by hand.

Note: If remove the cleaner Base Plate, Cleaner roller Position adjustment should be performed.

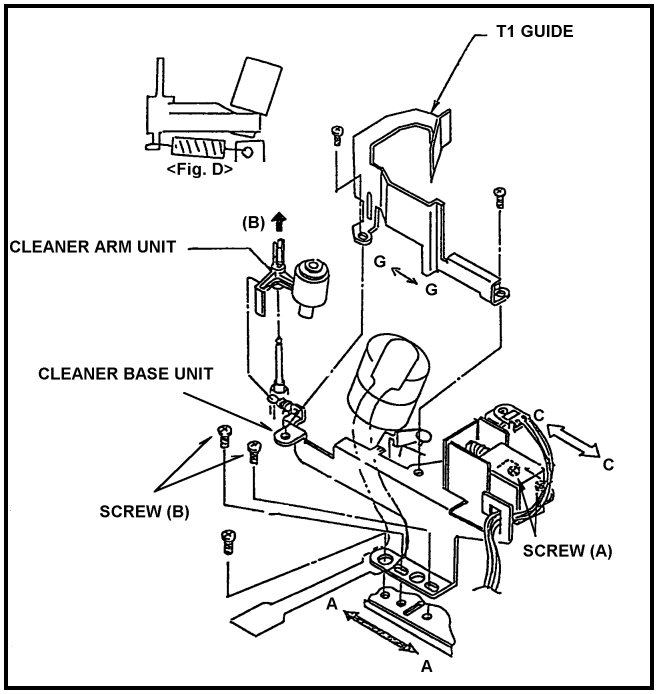

Fig.6-17-2 Cleaner Solenoid Position Adjustment (1)

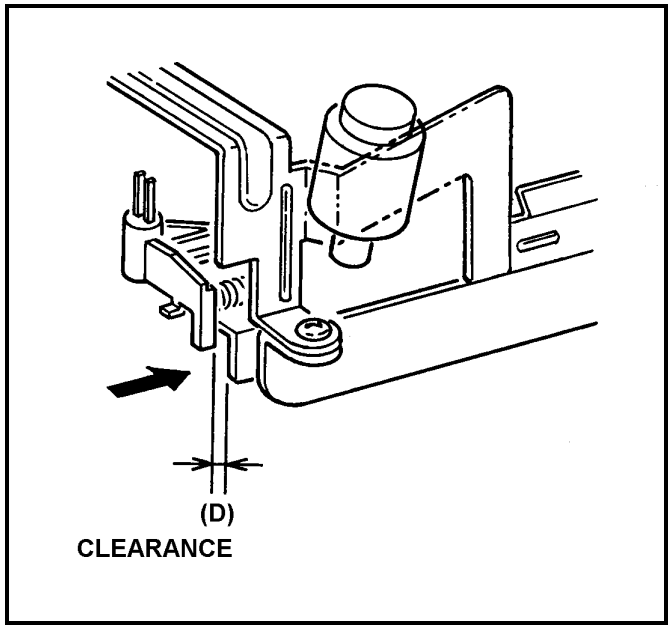

Fig.6-17-3 Cleaner Solenoid Position Adjustment (2)

6-17-2.Cleaner Roller Position Adjustment

✶ Tools Required : Eccentric Driver (VFK0357)

1. Observe the clearance (A) between Cleaner Roller and cylinder Unit as shown in Figure 6-15-3. And make sure that it is within 1.0 to 1.2mm.
2. If not, loosen the 2 screws (B) and adjust the position of Cleaner Base Plate by moving arrow direction (A ⇔ A) using the Eccentric driver so that the clearance (A) is within specification. And tighten the 2 screws (B).

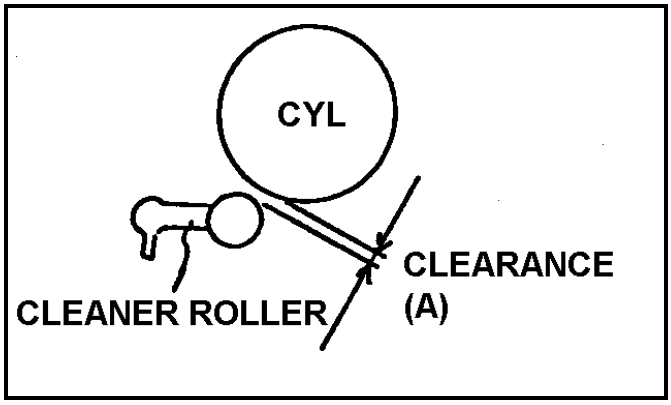

Fig.6-17-4 Cleaner Roller Position Adjustment

6-18. M-Stopper Solenoid Replacement and Adjustment

(Removal)

1. Remove the Top Cover.
2. Remove the Front Loading Unit.
3. Remove the connector P24 on the Mech I/F P.C.Board as shown in Figure 6-3-1..
4. Unscrew the 4 screws (A) and (B) and remove the M-Stopper Solenoid as shown in Figure 6-18-1.

(Installation)

1. Install the new M-Stopper Solenoid follow the removal steps in reverse order.
2. After installation, position adjustment should be performed as follows.

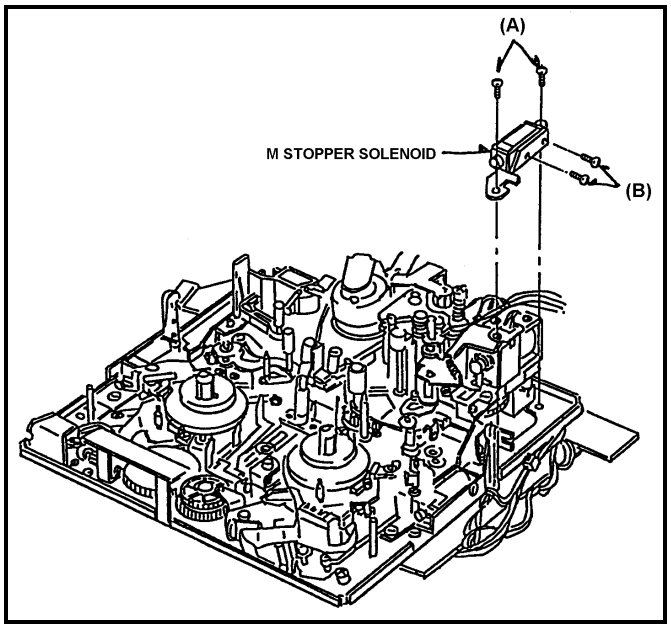

Fig.6-18-1 Removal of M-Stopper Solenoid

(Adjustment)

1. Place the reels in the L size position.
2. Push the iron core of M-Stopper Solenoid by hand.
3. Observe the clearance (A) between Mech Chassis and M-Stopper as shown in Figure 6-18-2. And make sure that it is within 1.1 to 1.3mm.
4. If not, loosen the 2 screws (A), which fixed M-Stopper Solenoid. And adjust the position of M-Stopper Solenoid so that the clearance (A) is within specification. And tighten the 2 screws (A).

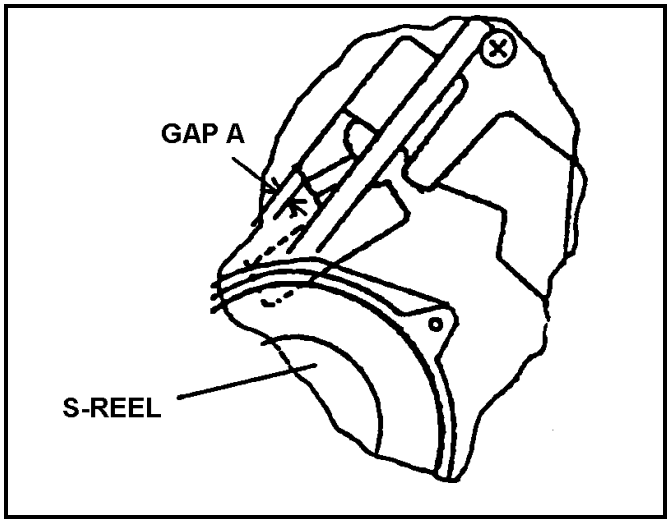

Fig.6-18-2 M-Stopper Solenoid Position Adjustment

6-19. Distinction SW Unit Replacement

(Removal)

1. Remove the Top Case Unit.
2. Remove the Front Loading Unit.
3. Remove the Bottom Case Unit.
4. Open the P.C.Board Unit and remove the Shield Plate.
5. Disconnect the connector P17 on Servo P.C.Board.
6. Unscrew the 3 screws (A) and remove the Distinction SW Unit as shown in Figure 6-19-1.

(Installation)

1. Install the new Distinction Switch Unit follow the removal steps in reverse order.
2. Confirm that the M and L cassettes touch to Distinction Switch Unit correctly.

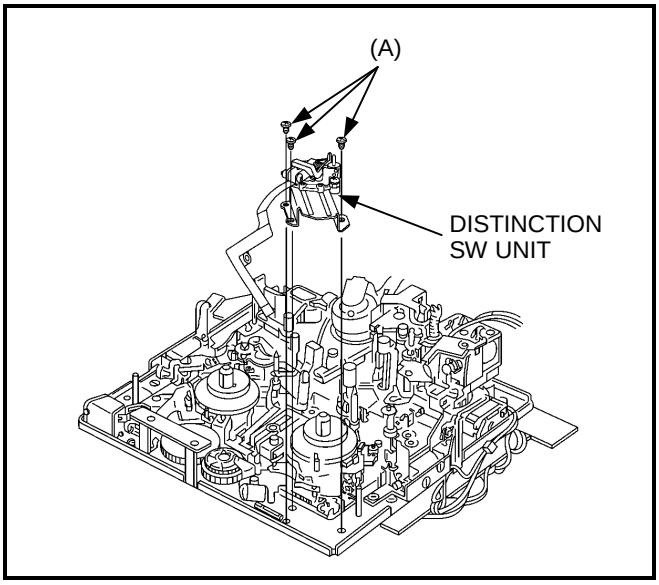

Fig. 6-19-1 Removal of Distinction Switch Uni

6-20. Reel Drive Motor Unit Replacement

(Removal)

1. Remove the Top Cover.
2. Remove the Front Loading Unit.
3. Disconnect the connector P16 on the Mech I/F P.C.Board. as shown in Figure 6-3-1.
4. Unscrew the 2 screws (A) and remove the Reel Drive Sensor P.C.Board as shown in Figure 6-19-1.
5. Unscrew the 2 screws (B) and remove the Reel Drive Motor Unit as shown in Figure 6-20-1.

(Installation)

Install the new Reel Drive Motor Unit follow the removal step in reverse order.

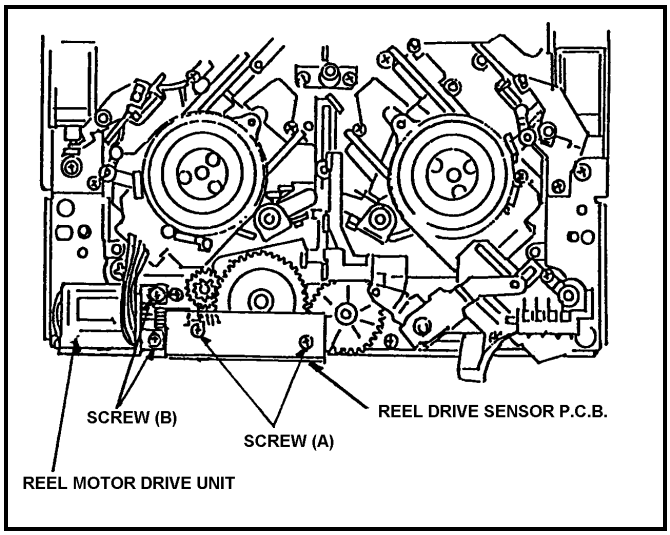

Fig.6-20-1 Removal of Reel Drive Motor Unit

6-21. L-M Release Angle Unit Replacement

(Removal)

1. Remove the Top Panel.
2. Remove the Front Loading Unit.
3. Unscrew the 2 screws (A) and remove the L-M Release Angle Unit as shown in Figure 6-21-1.

(Installation)

1. Install the new L-M Release Angle Unit follow the removal steps reverse order.

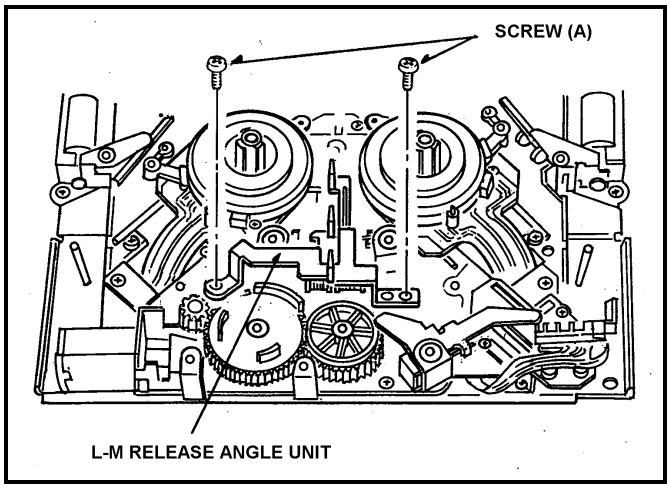

Fig.6-21-1 Removal of L-M Release Angle Unit

6-22.Slide Rod Unit Replacement and Adjustment

(Removal)

1. Remove the Top Panel.
2. Remove the Front Loading Unit.
3. Remove the L-M Release Angle Unit. (Refer to item 6-21).
4. Remove the Reel Drive Sensor P.C.Board (Refer to item 6-20).
5. Remove the Cut Washer (A) and remove the Reel Drive Cam Gear.
6. Remove the Cut Washer (B) and remove the MIC Drive Arm Unit.
7. Remove the Cut Washer (C) and remove the MIC Geneva Gear.
8. Remove the Cut Washer (D) and remove the Reel Drive Arm Unit as shown in Figure 6-22-2.
9. Remove the Supply and Take Up Reel Rotor Unit (Refer to item 6-3).
10. Remove the 2 Cut Washers (E) and remove the Supply and Take Up Base Drive Arm Unit.
11. Remove the 2 Cut Washers (F) and remove the Slide Rod Unit.

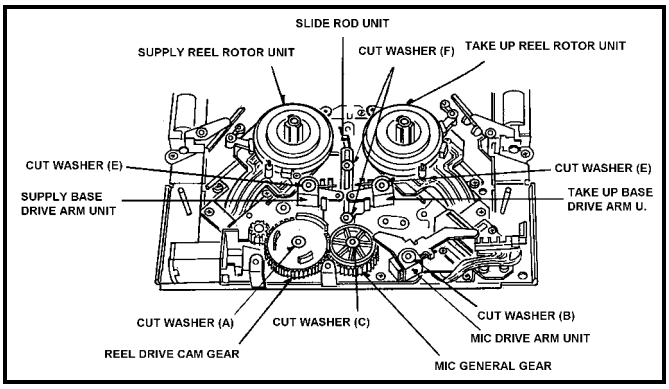

Fig.6-22-1 Removal of Slide Rod Unit

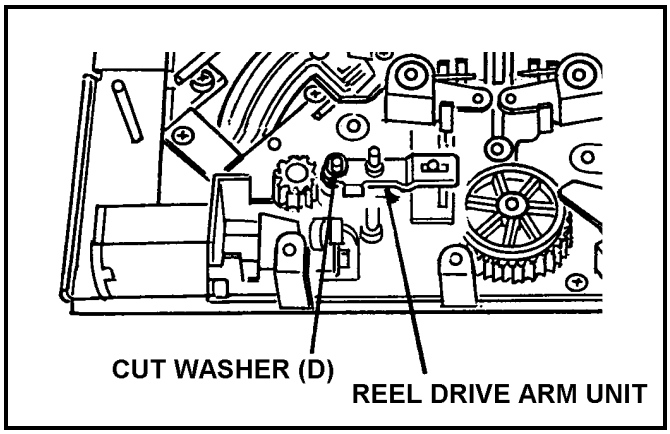

Fig.6-22-2 Removal of Reel Drive Arm Unit

(Installation)

1. Install the new Slide Rod Unit follow the removal steps in reverse order.
2. When install the Reel Drive Cam Gear and MIC Geneva Gear, then phase adjustment should be performed as follows.

(Adjustment)

1. Install the MIC Geneva Gear to the Chassis.
2. Place the Reels in the M-Size position by hand.
3. Install the MIC Drive Arm Unit.
4. Place the REC Inhibit SW in front position on Distinction SW Unit by rotation of MIC Geneva Gear, and then MIC Geneva Gear should be positioned as shown in Figure 6-22-2.

Note: Protrusion of MIC DRIVE Arm Unit is positioned as shown in Figure 6-22-2.

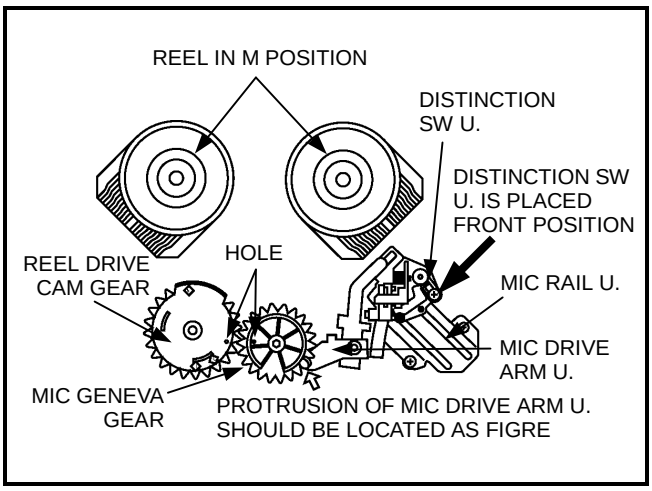

Fig.6-22-3 Gear Phase Adjustment

5. Install the Reel Drive Cam Gear and hole of Reel Drive Cam Gear should be matched with the hole of MIC Geneva Gear as shown in Figure 6-22-3.
6. Install the Cut Washer (A), (B) and (C) as shown in Figure 6-22-1.

✶Point of Adjustment

1) Reel in M-Seze position.
2) Set the REC Inhibit SW in front position of Distinction SW Unit.
3) Portrusion of MIC Drive Arm Unit is positioned as shown in Figure 6-22-3.
4) Holes between Reel Drive Cam Gear and MIC Geneva Gear are matched.

6-23. T4 Post Phase Adjustment

1. Place unit into unloading condition.
2. Confirm that the hole (B) of T4 connection Gear was matched to hole of T4 post as shown in figure 6-23-1.
3. Confirm that the portion (C) of T4 connection Gear and hole (A), which are located as shown in figure 6-23-1.
4. If not, adjust the phase of T4 post follow the above procedure.

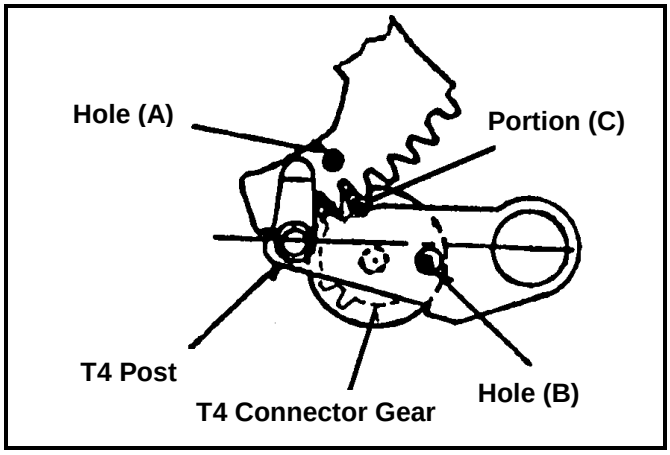

Fig.6-23-1 Phase of T4 Post

6-24. Thrust Adjustment Screw Replacement and Adjustment

1. Remove the Thrust Adjustment Screw.
2. Enforce cleaning of point department of capstan shaft with an applicator.
3. Put the oil (VFK0906) on a new Thrust Adjustment Screw and install the upper end of the Capstan Housing.
4. Turn the Thrust Adjustment Screw slowly to counter-clockwise until the Capstan Rotor just starts turning (separate from the Capstan Rotor).
5. Turn the Trust Adjustment Screw an another angle of 270° from 180° (about 225°) clockwise as shown in Fig. 6-24-2.
6. Put the glue (Ex: Three Bond 1401B) on the Thrust Adjust Screw.
7. Confirm whether the Oil Seal does not come in contact with the Capstan Housing.

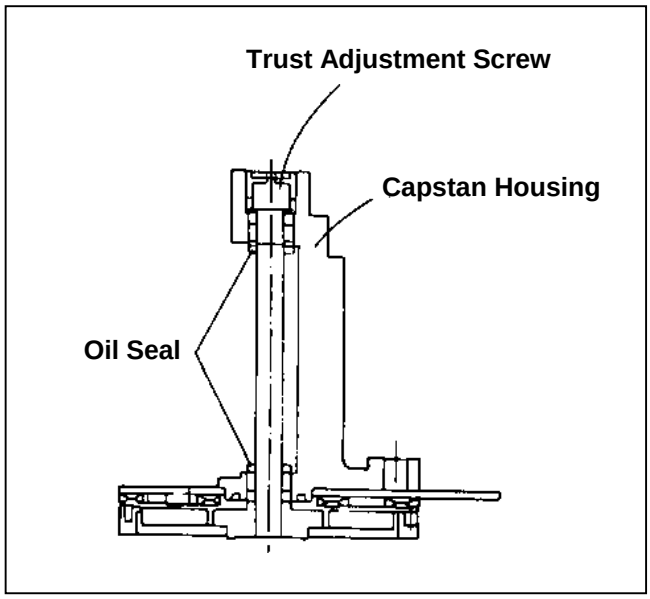

Fig.6-24-1 Removal of Trust Adjustment Screw

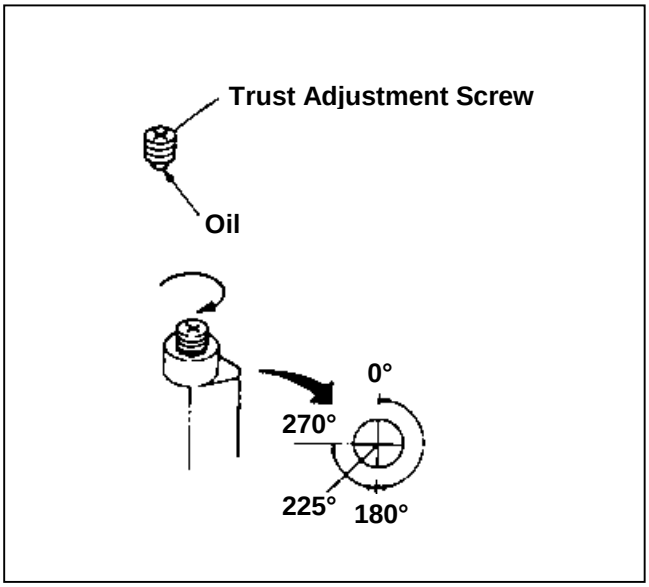

Fig.6-24-2 Adjustment of Thrust Adjustment Screw

SECTION 4

ELECTRICAL ADJUSTMENT

CONTENTS

1. POWER 4-1
    1-1. +5V and +12V Confirmation & Adjustment 4-1
2. SYSTEM CONTROL 4-1
    2-1. Super Impose Position Adjustment 4-1
3. MECH INTERFACE 4-2
    3-1. Photo Sensor Voltage Adjustment 4-2
4. SERVO 4-2
    4-1. Motor Torque Offset Adjustment 4-2
5. EQ and RF Adjustment 4-3
    5-1. AUTO ADJUSTMENT PROCEDURE 4-3
        5-1-1. Preparation and Connection of Auto EQ Adjustment Tool 4-3
        5-1-2. DVCPRO Playback Adjustment 4-8
        5-1-3. DV (Consumer) Playback Adjustment 4-10
        5-1-4. Confirmation of Error Rate (PLAYBACK) 4-11
        5-1-5. DVCPRO Recording Adjustment 4-12
        5-1-6. Confirmation of Error Rate (REC) 4-14
    5-2. MANUAL ADJUSTMENT PROCEDURE 4-18
    5-3. EQ ADJUSTMENT 4-19
        5-3-1. PLL Lock Adjustment (PB) 4-19
        5-3-2. PLL Latch Phase Coarse Adjustment (PB) 4-19
        5-3-3. PLL Slice Level Coarse Adjustment (PB) 4-20
        5-3-4. EQ Adjustment (1) (PB) 4-20
        5-3-5. EQ Adjustment (2) (PB) 4-21
        5-3-6. PLL Latch Phase Fine Adjustment (PB) 4-21
        5-3-7. PLL Slice Level Fine Adjustment (PB) 4-22
        5-3-8. Viterbi A/D Input Level Adjustment 4-22
        5-3-9. PLL Lock Adjustment (R/P) 4-23
        5-3-10. PLL Latch Phase Adjustment (R/P) 4-24
        5-3-11. PLL Slice Level Adjustment (R/P) 4-24
        5-3-12. EQ Adjustment (1) (R/P) 4-24
        5-3-13. EQ Adjustment (2) (R/P) 4-25
        5-3-14. PLL Latch Phase Fine Adjustment (R/P) 4-25
        5-3-15. PLL Slice Level Fine Adjustment (R/P) 4-26
        5-3-16. PLL Lock Confirmation (Consumer DV) 4-26
        5-3-17. PLL Slice Level Coarse Adjustment (Consumer DV) 4-27
        5-3-18. EQ Adjustment (1) (Consumer DV) 4-27
        5-3-19. EQ Adjustment (2) (Consumer DV) 4-28
        5-3-20. PLL Slice Level Fine Adjustment (Consumer DV) 4-28
        5-3-21. Consumer DV Viterbi Confirmation 4-29
        5-3-22. Final Confirmation of Error rate 4-29
    5-4. REC AMP BOARD 4-30

5-4-1. REC Current, Frequency Characteristic Adjustment 4-30
5-4-2. Rotary Erase Current Adjustment 4-31
6. REC PB 4-32
6-1. PLL Lock DC Level Adjustment 4-32
6-2. Audio VCO Center Freq. Adjustment 4-32
7. Video Out P.C. Board (F4) [FOR NTSC ONLY] 4-33
7-1. REF PLL Center Adjustment 4-34
7-2. REF CF Detection Adjustment 4-34
7-3. Ref. H Phase Adjustment 4-35
7-4. Composite Set-up Adjustment 4-35
7-5. Sync Level Adjustment 4-35
7-6. Carrier Balance Adjustment 4-35
7-7. Composite Y Level Adjustment 4-36
7-8. Composite Y Frequency Response Adjustment 4-36
7-9. Vector Adjustment 4-37
7-10. Composite Pb/Pr Timing Adjustment 4-38
7-11. Composite Y/C Timing Adjustment 4-38
7-12. Sub-Carrier Phase Adjustment 4-39
7-13. Burst Adjustment 4-39
7-14. Burst Position Adjustment 4-40
7-15. Confirmation of Vector 4-40
7-16. Component Ref. H & Sub-Carrier Phase Adjustment 4-41
7-17. Component Y Level Adjustment 4-41
7-18. Video Phase Adjustment 4-42
7-19. Component Y Frequency Response Adjustment 4-42
7-20. Component Pb Level Adjustment 4-42
7-21. Component Pr Level Adjustment 4-42
7-22. Component Y/Pb Timing Adjustment 4-43
7-23. Component Y/Pr Timing Adjustment 4-43
7-24. Composite Set up Adjustment (Set up ADD mode) 4-44
7-25. Composite Video Level Adjustment (Set up ADD mode) 4-44
7-26. Vector Adjustment (Set up ADD mode) 4-45
7. Video Out P.C. Board (F4) [FOR PAL ONLY] 4-46
7-1. REF PLL Center Adjustment 4-47
7-2. REF CF Detection Adjustment 4-47
7-3. Ref. H Phase Adjustment 4-48
7-4. Composite Set-up Adjustment 4-48
7-5. Sync Level Adjustment 4-48
7-6. Carrier Balance Adjustment 4-48
7-7. Composite Y Level Adjustment 4-49
7-8. Composite Y Frequency Response Adjustment 4-49
7-9. Vector Adjustment 4-50
7-10. Composite Pb/Pr Timing Adjustment 4-51
7-11. Composite Y/C Timing Adjustment 4-51
7-12. Sub-Carrier Phase Adjustment 4-52
7-13. Burst Adjustment 4-52
7-14. Burst Position Adjustment 4-53
7-15. Confirmation of Vector 4-53
7-16. Component Ref. H & Sub-Carrier Phase Adjustment 4-54
7-17. Component Y Level Adjustment 4-54
7-18. Video Phase Adjustment 4-55
7-19. Component Y Frequency Response Adjustment 4-55

7-20. Component Pb Level Adjustment 4-55
7-21. Component Pr Level Adjustment 4-55
7-22. Component Y/Pb Timing Adjustment 4-56
7-23. Component Y/Pr Timing Adjustment 4-56
8. V IN P.C. Board [FOR NTSC ONLY] 4-57
8-1. Preparation for Video In Adjustment 4-57
8-2. 13.5MHz VCO Adjustment 4-57
8-3. Component Y Timing Adjustment 4-57
8-4. Component Y Level Adjustment 4-58
8-5. Component PB Level Adjustment 4-58
8-6. Component PR Level Adjustment 4-58
8-7. Component Y/C Timing Adjustment 4-58
8-8. Composite Input Level Adjustment 4-59
8-9. Composite Y Level Adjustment 4-59
8-10. Composite Chroma Level Adjustment 4-59
8-11. Composite Color Demodulation Adjustment 4-60
8-12. Composite PB Level Adjustment 4-60
8-13. Composite PR Level Adjustment 4-60
8-14. Composite YC Timing Adjustment 4-61
8-15. Composite SCH Detection Adjustment 4-62
8-16. Composite Vector Adjustment 4-62
8. V IN P.C. Board [FOR PAL ONLY] 4-63
8-1. Preparation for Video In Adjustment 4-63
8-2. 13.5MHz VCO Adjustment 4-63
8-3. Component Y Timing Adjustment 4-63
8-4. Component Y Level Adjustment 4-64
8-5. Component PB Level Adjustment 4-64
8-6. Component PR Level Adjustment 4-64
8-7. Component Y/C Timing Adjustment 4-64
8-8. Composite Input Level Adjustment 4-65
8-9. Composite Y Level Adjustment 4-65
8-10. Composite Chroma Level Adjustment 4-65
8-11. Composite Colour Demodulation Adjustment 4-66
8-12. Composite PB Level Adjustment 4-66
8-13. Composite PR Level Adjustment 4-66
8-14. Composite YC Timing Adjustment 4-67
8-15. Composite SCH Detection Adjustment 4-68
8-16. Composite Vector Adjustment 4-68
9. AUDIO ADDA 4-69
9-1. Initial Setting of Audio Adjustment 4-69
9-2. Output Balance Adjustment 4-69
9-3. Output Level Adjustment 4-70
9-4. Input CMRR Adjustment 4-70
9-5. Input Level Adjustment 4-70
10. CUE 4-71
10-1. Initial Setting of CUE Adjustment 4-71
10-2. CTL Erase Frequency Adjustment 4-71
10-3. CTL Erase/CUE Erase Current Adjustment 4-71
10-4. CUE Bias Current Adjustment 4-72
10-5. CUE PB Level Adjustment 4-72
10-6. CUE Noise Cancel Adjustment 4-72
10-7. CUE REC/PB Level Adjustment 4-72

1. POWER

1-1. +5V and +12V Confirmation & Adjustment

BOARD	POWER 2
SPEC.	5V: 5.1V ± 0.1V 12V: 11.8V ± 0.6V
TEST	TP6 (+5V), TP12 (+12V) (SYSCON BOARD:F2)
ADJUST	VR1 (+5V), VR2 (+12V)
INPUT	----------
MODE	EJECT
M.EQ	Digital Volt Meter

1. After connect the test point on SYSCON Board, turn the power ON.
2. Confirm that the voltage at TP6 and 12 in the specification.
3. If it is not, adjust VR1 and VR2 so that the voltage in the specification.

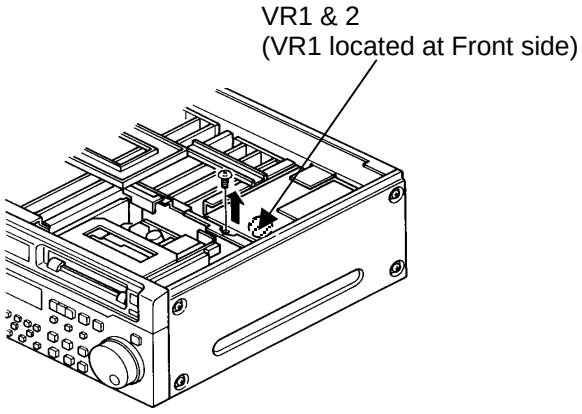

2. SYSTEM CONTROL

2-1. Super Impose Position Adjustment

BOARD	SYSCON (F2)
SPEC.	A = B
TEST	MONITOR
ADJUST	VC1
INPUT	----------
MODE	EJECT
M.EQ	Monitor TV

1. Press the MENU , and displayed the SETUP-MENU.
2. Adjust VC1 so that the width A and B are equal.
3. Press the MENU button, and finished the SETUP-MENU.

NOTE: The display of menu may be different the above figure.

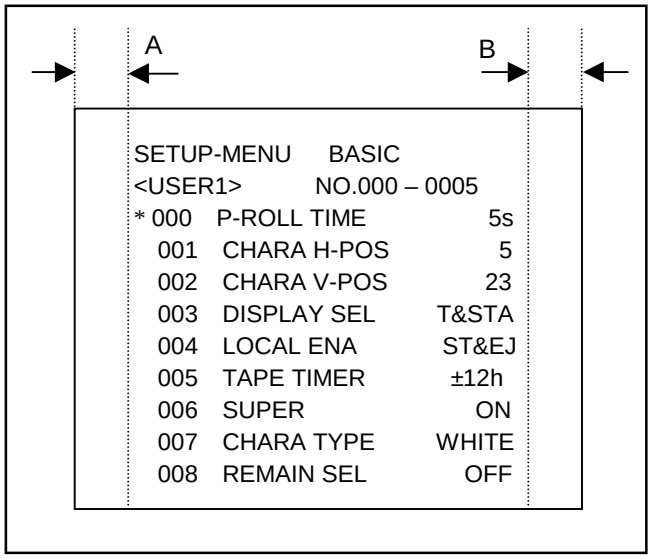

3. MECH INTERFACE

3-1. Photo Sensor Voltage Adjustment

BOARD	MECH INTERFACE
SPEC.	A = 3.0~4.3VDC
TEST	Foil Pattern of TP13 (Supply) Foil Pattern of TP14 (Take Up) (SYSCON BOARD)
ADJUST	DIP SW200 (MECH I/F BOARD)
INPUT	----------
MODE	EJECT
M.EQ	Oscilloscope VFK1423 (Tape Big./End Det. Cassette)

1. Remove the Bottom Panel.
2. Insert the VFK1423 and measure the voltage at TP13 and TP14.
3. Set the Dip SW200 so that the DV voltage “A” in the specification.

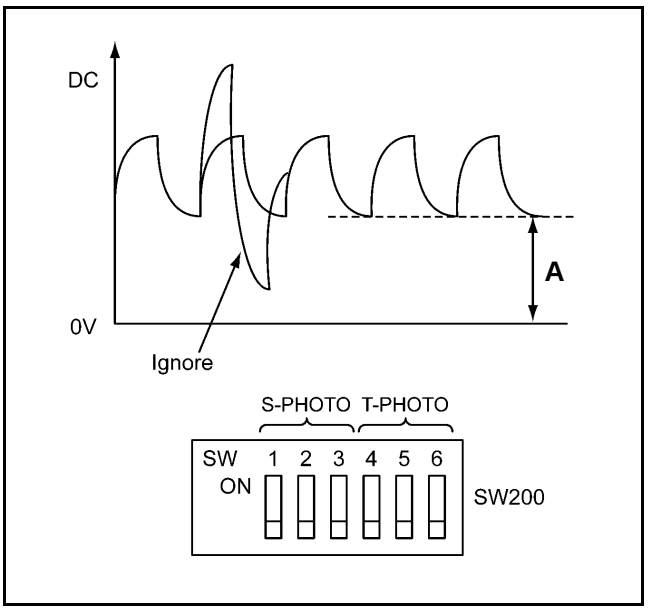

SW1 SW4	SW2 SW4	SW3 SW5	S-PHOTO T-PHOTO	Synthetic Resistance
1	1	1	A Voltage	420Ω
0	1	1	UP	460Ω
1	0	1	↑	660Ω
0	0	1		750Ω
1	1	0		880Ω
0	1	0	↓	1050Ω
1	0	0	A Voltage	3300Ω
0	0	0	DOWN	8200Ω

***:** 1=ON, 0=OFF

4. SERVO

4-1. Motor Torque Offset Adjustment

BOARD	SERVIO (F1)
SPEC.	15 ± 2grcm (5 times average)
TEST	Connect Monitor TV to VIDEO OUT3
ADJUST	A03:T-REEL TRQ A04:S-REEL TEQ (EVR on Service Menu)
INPUT	----------
MODE	EJECT
TAPE	No Tape
M.EQ	VFK1191 (Dial Torque Gauge) VFK1152 (Dial Torque Gauge Adapter)

1. Set the REEL TABLE to M-cassette position.
2. Remove the Front Loading Unit with the connection cable or remove the Top Plate of Front Loading Unit, which is fixed by 6 screws.
3. Open the SERVO ADJUST menu on the Service menu and select the item “ A03:T REEL TRQ “.
4. Set a Dial Torque Gauge to top of Take-up Reel Table.
5. Press the SEARCH button at 5 times and measure the value of Dial Torque Gauge at 5 times, then calculate the average and adjust EVR “T REEL TRQ” so that the average is in the specification.

Note: While press the SEARCH button, the REEL Table is rotated

6. Select the item “ A04:S REEL TRQ ”.
7. Set a Dial Torque Gauge to top of Take-up Reel Table.
8. Press the SEARCH button at 5 times and measure the value of Dial Torque Gauge at 5 times, then calculate the average and adjust EVR “S REEL TRQ” so that the average is in the specification.

5.EQ and RF Adjustment

EQ and RF adjustment can be executed by RF AUTO EQ software and RF AUTO ADJUSTMENT TOOL.
This Service Manual mention of auto adjust procedure and manual adjustment procedure.

5-1. AUTO ADJUSTMENT PROCEDURE

5-1-1. Preparation and Connection of Auto EQ Adjustment Tool

Test Point	TP2:PB HSW, TG1:GND (RF AMP Board:H4) TP17:PB ENV, TG7:GND (RF AMP Board:H4)
Equipment	• RF Auto Adjustment Tool(VFK1163) * This Tool attached 2 kinds of cable • RF Adjustment Software(VFK1160C) • IBM PC Compatible (486/66MHz or greater) • DAQ-12 A/D Card (Quatech): * This Board is install to PC as same as LISTA ADJ. • DC Power Supply (+8.5V to +12V) • RS-232C Cable (type of Cross cable)
Tape	**NTSC:** VFM3580KM(DVCPRO), VFM3010EDS (DV) **PAL:** VFM3680KM(DVCPRO), VFM3110EDS (DV) Self-recording and Playback Tape

1. Supply DC Voltage(+8.5 to +12V) to EQ Tool. RF Adjustment Tool requires DC power supply (+8.5V to +12V). Use DC power supply or AC Adaptor movie like " VW-AMC1 ".
2. Connect the extension board with RF AMP (H4) board and connect the clip of cable from EQ tool to Test Point follow as below table on the RF AMP P.C.Board.

WHITE CLIP	TP2	RED CLIP	TP17
BLACK CLIP	TG1	BLACK CLIP	TG7

3. Connect the 62 pin D-Sub connector of cable from EQ tool to A/D Board of PC.
4. Connect the RS232C cable to between VTR and PC.

Connection

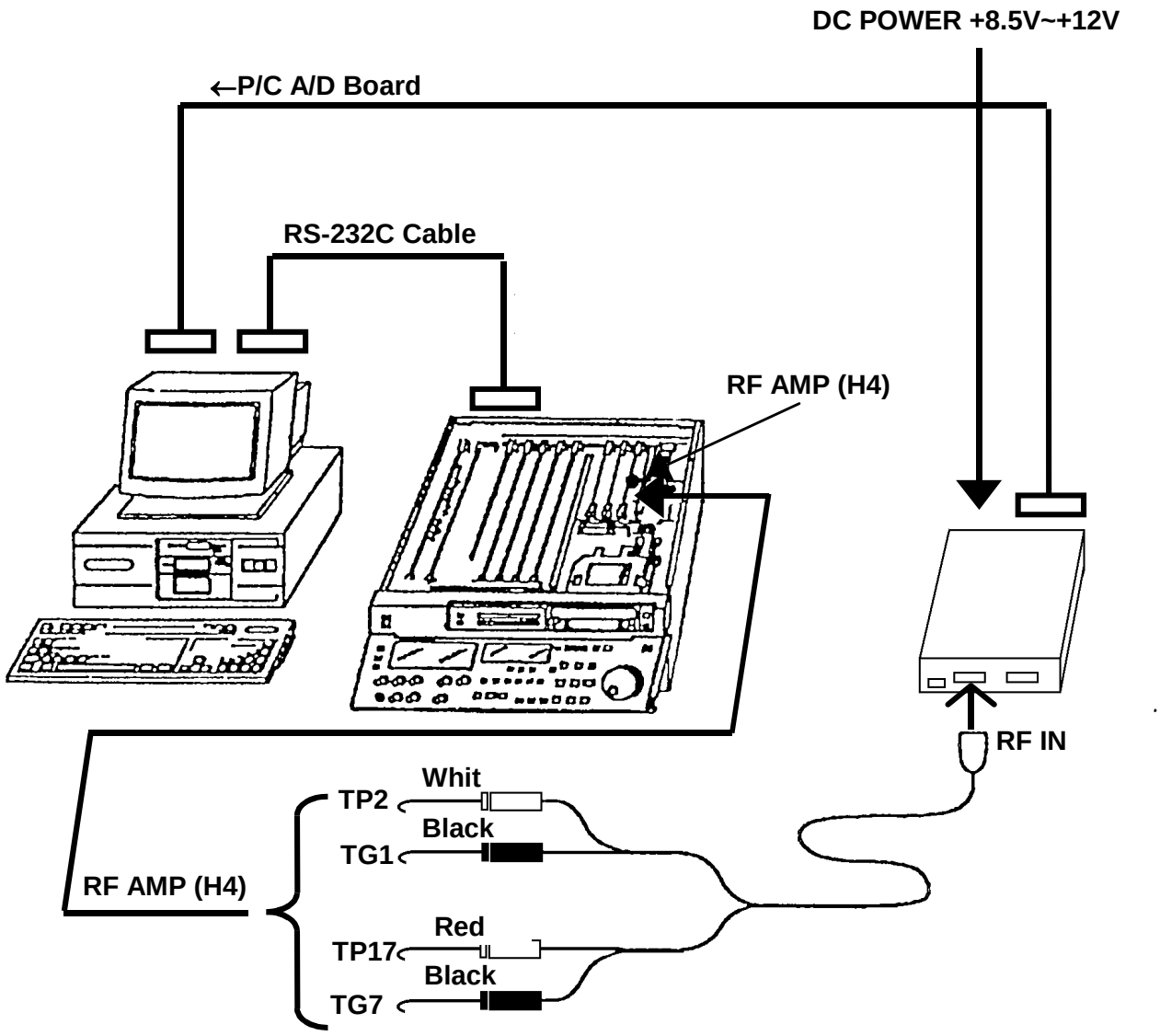
DC POWER +8.5V~+12V
←P/C A/D Board
RS-232C Cable
RF AMP (H4)
RF IN
Whit
TP2
Black
TG1
RF AMP (H4)
Red
TP17
Black
TG7

Initial Setting

< Setting of VTR >

1. Open the Set Up Menu in User mode (do not use Service Mode) and confirm the menu is in <USER1> and set the RS-232C mode as shown below.

204	RS232C SEL	ON
205	BAUD RATE	9600
206	DATA LENGTH	8
207	STOP BIT	1
208	PARITY	NON
209	RETURN ACK	ON

2. Press SET button after setting the above items.
3. Set the LOCAL / REMOTE SW to REMOTE side.
4. Set the service switch (DIP SW 1-1: located at bottom side of front panel) to on position.

During Automatic EQ adjustment, adjustment is done with ALIGNMENT tape, so rewind the necessary amount of adjustment tape (DVCPRO MASTER and DV MASTER tape) before boot up the EQ automatic adjustment software.

NOTE: When the VTR detected tape end position during adjustment, rewind the tape automatically to tape beginning position and continuation of adjustment.

Boot Up the RF Automatic Adjustment Software.

1. Boot Up the EQ Adjustment software after setting and connection.

   ☆ Install and boot up

   Copy the all files in the floppy disk of EQ adjustment software to hard disk (for example as directly “RF ADJ“: C:\RFADJ).

   Executive file is DVCRF, so type “DVCRF” and press Enter, then boot up Auto EQ software.

2. Before boot up software, please confirm the tape does not into VTR and LOCAL/REMOTE switch on the front panel set to REMOTE side.
3. After boot up software, appear the message “DVCPRO MODEL SELECT “ on the screen, then select the model. In case of the AJ-D850, select the item “(1) AJ-D850”.
4. Next select item “(1) Adjusting Program” on the “PROGRAM SELECT “ menu.
5. After item 4 the parameter loading menu is appeared and wait about 20 second. This waiting time can be skipped by pressing ENTER key. Then “RS-232C CONNECTION COMPLETE”, “AD BOARD CONNECTION COMPLETE” messages and Main Menu are appeared.

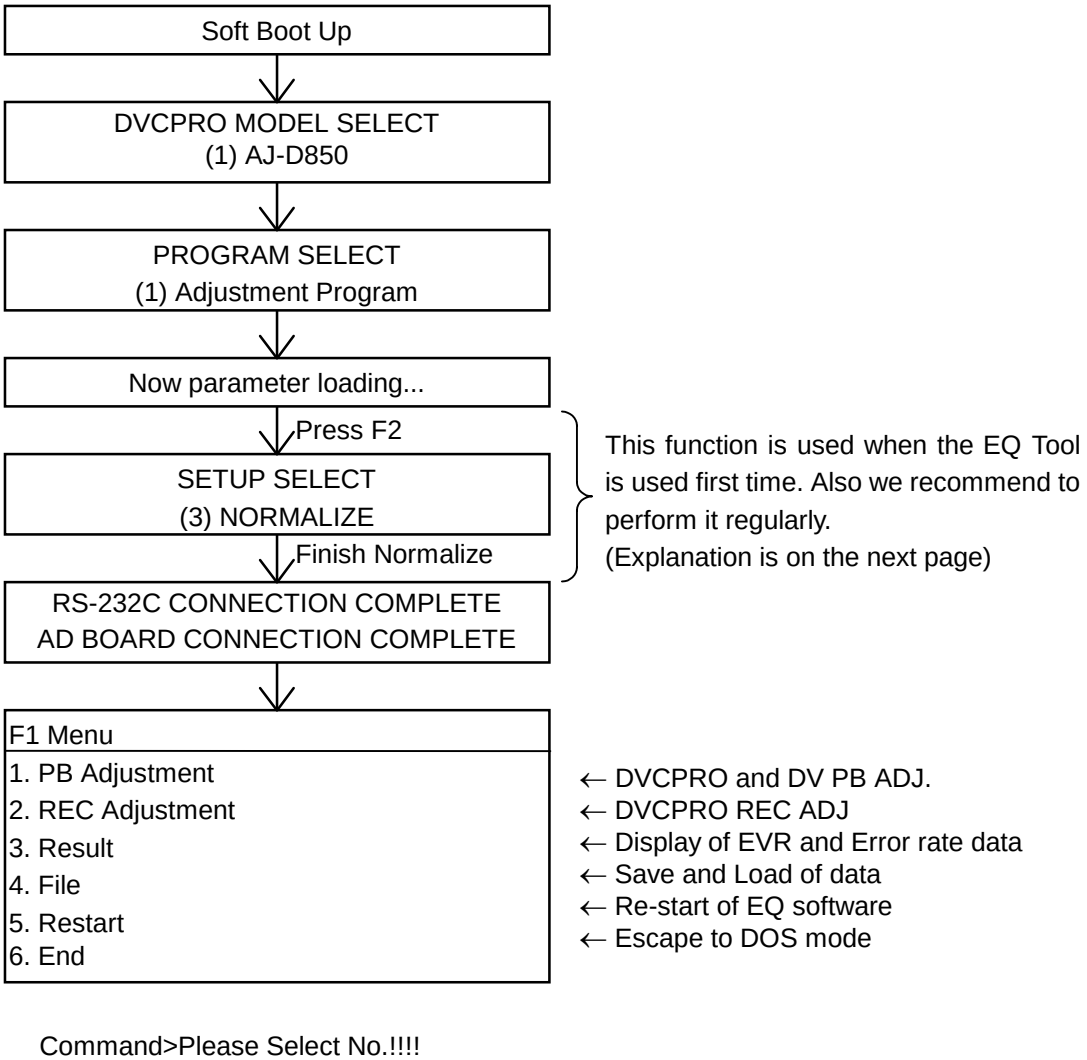

Command>Please Select No.!!!!

☆Normalize of RF AUTO ADJUSTMENT TOOL

Press <F2> enter to SET UP, then appeared display as below.

SETUP SELECT

(1) RS-232C
(2) AD
(3) NORMALIZE
(4) PRGKIND
(5) END

INPUT No!! or Select by cursor Key (U/D) and hit RETURN

Please select the “(3) NORMALIZE”, and press Enter key, then appeared message “Play back the DVCPRO MASTER TAPE, Then PRESS ENTER Key“.

Insert DVCPRO color bar alignment tape and press Enter key, then measurement value appeared as indicated as below.

Tool BOX Normalizing

	5MHz BPF	10MHzBPF	20MHzBPF	APF
USER DATA	0.025028	0.032613	0.030525	0.011855
DEFAULT DATA	0.028084	0.031761	0.030125	0.011872

Normalizing Again? [Y/N]

When you use RF Adjustment Tool first time, please confirm that the value of USER DATA and DEFAULT DATA, which should be difference within +/- 0.01.

When performing this normalization regularly under condition of the same combination of the PC, A/D Board and EQ Tool, the difference of USER DATA and DEFAULT DATA should be with in +/- 0.005.

If USER DATA value is became out of spec, RF Adjustment Tool (VFK1163) have a problem.

In case of the data within spec, please select the “N”, the appear the massage below.

Please Select (U)ser / (D)efault!

Please select “U”, then appeared SETUP SELECT Menu.

Eject the tape and select “(5) END”, then the screen return to parameter loading.

5-1-2. DVCPRO Playback Adjustment

1. Select “1. PB Adjustment” in the Main Menu.
2. Adjustment menu is appeared. “Tape not loading !!” message is appeared, press F8 key (AUTO) for automatic adjustment. The bottom numbers show the Function keys.

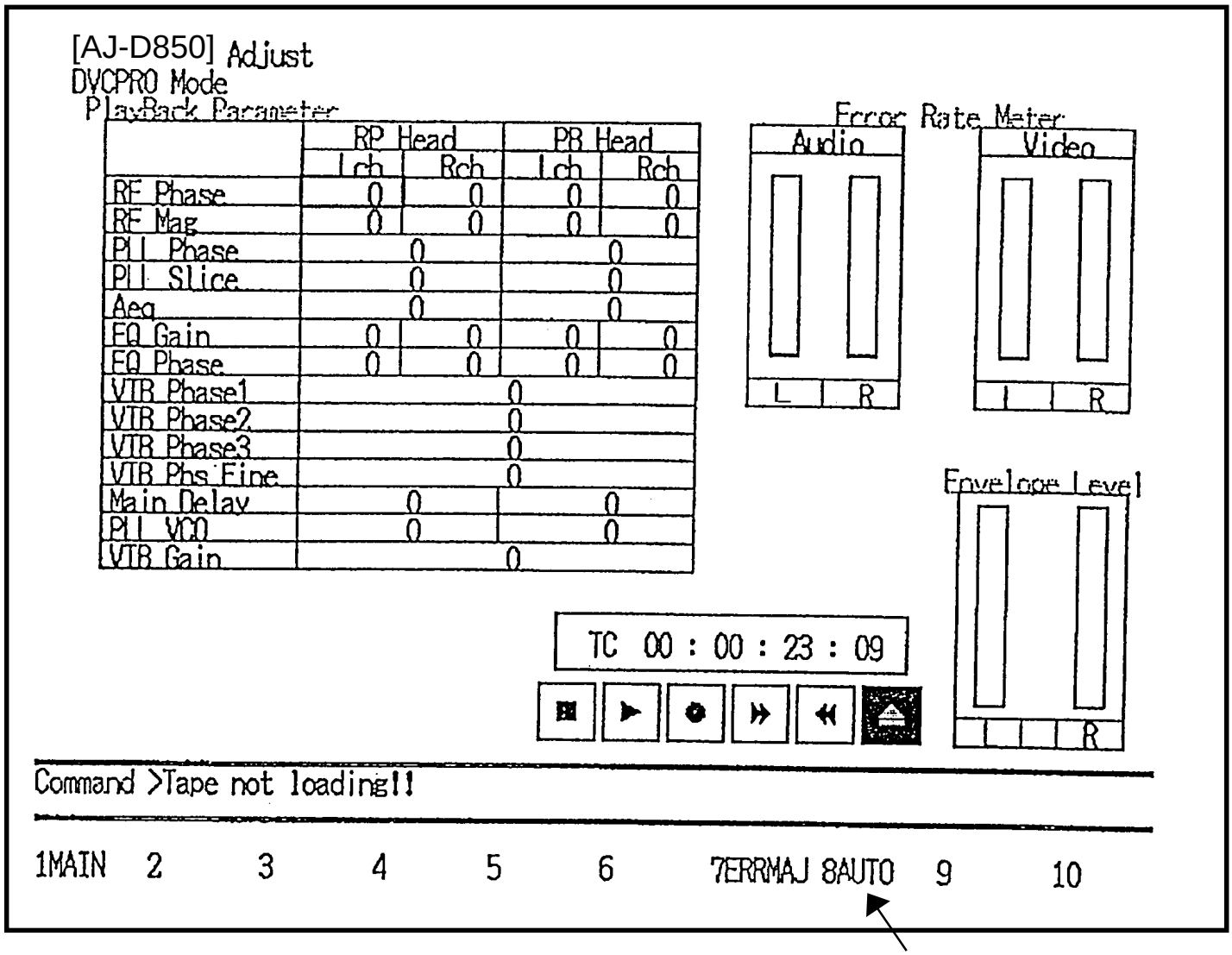

3. In the SELECT MENU, select “1. ALL Adjustment”.
4. Then the message of “PLEASE INSERT DVCPRO MASTER TAPE” is appeared in the former adjustment menu, insert DVCPRO MASTER (VFM3580KM : NTSC) or (VFM3680KM : PAL).

5. The following picture is appeared and automatic adjustment is started. During automatic adjustment, do not touch VTR and PC.
6. Adjustment is completed in 7 or 8 minutes. Then DV Playback adjustment is started. At bottom of the screen, “Please insert DV master Tape” is displayed.

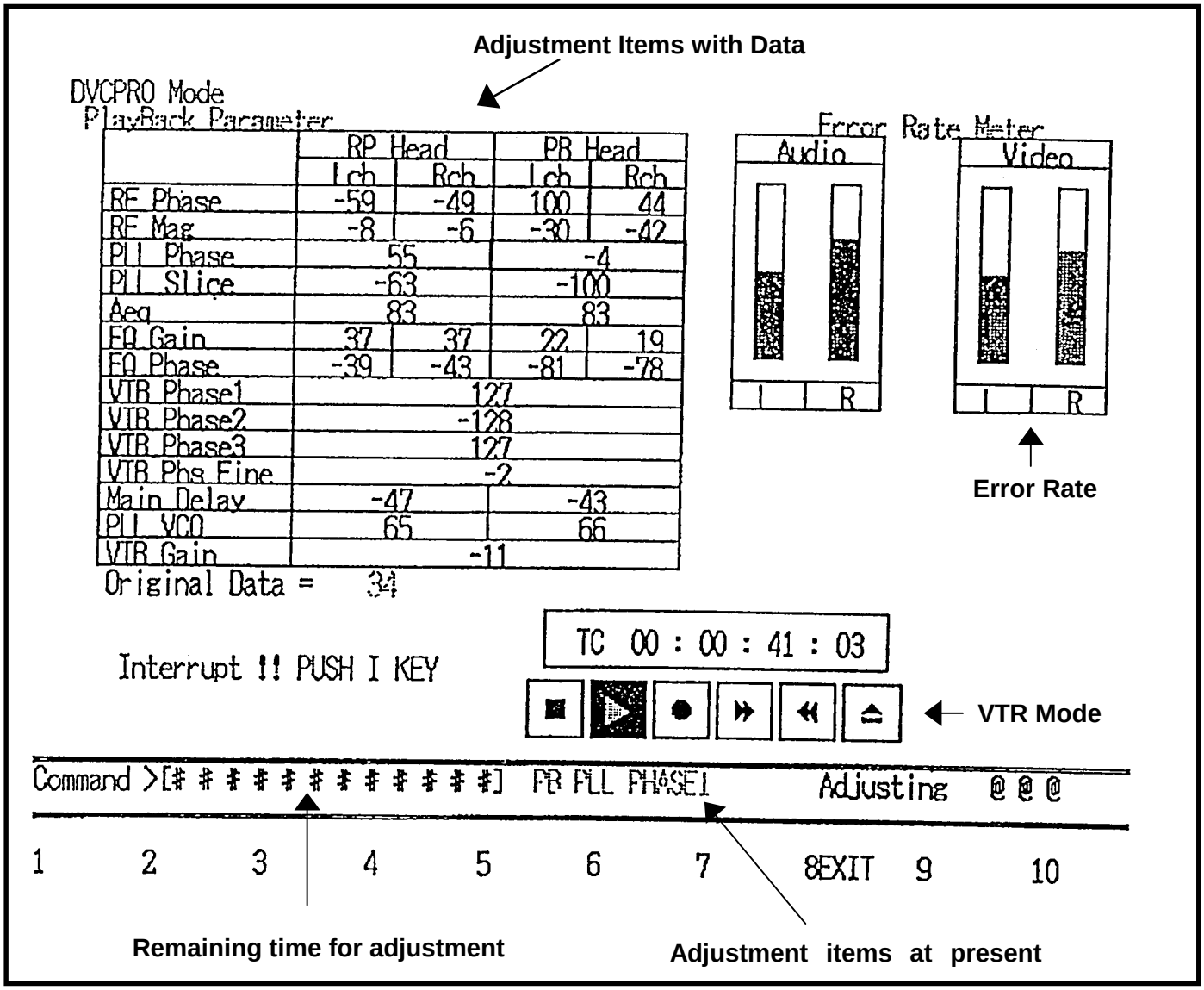

5-1-3. DV (Consumer) Playback Adjustment

This adjustment is done following DVCPRO Playback adjustment.

1. Tape is automatically ejected after DVCPRO Playback Adjustment. Insert DV MASTER Tape when “Please Insert DV MASTER” message is appeared.
2. When “DV Data Initialize?” [(Y)es or (N)o]” message is appeared, select N.
3. DV Playback automatic adjustment is started.
   During automatic adjustment, do not touch VTR and PC.

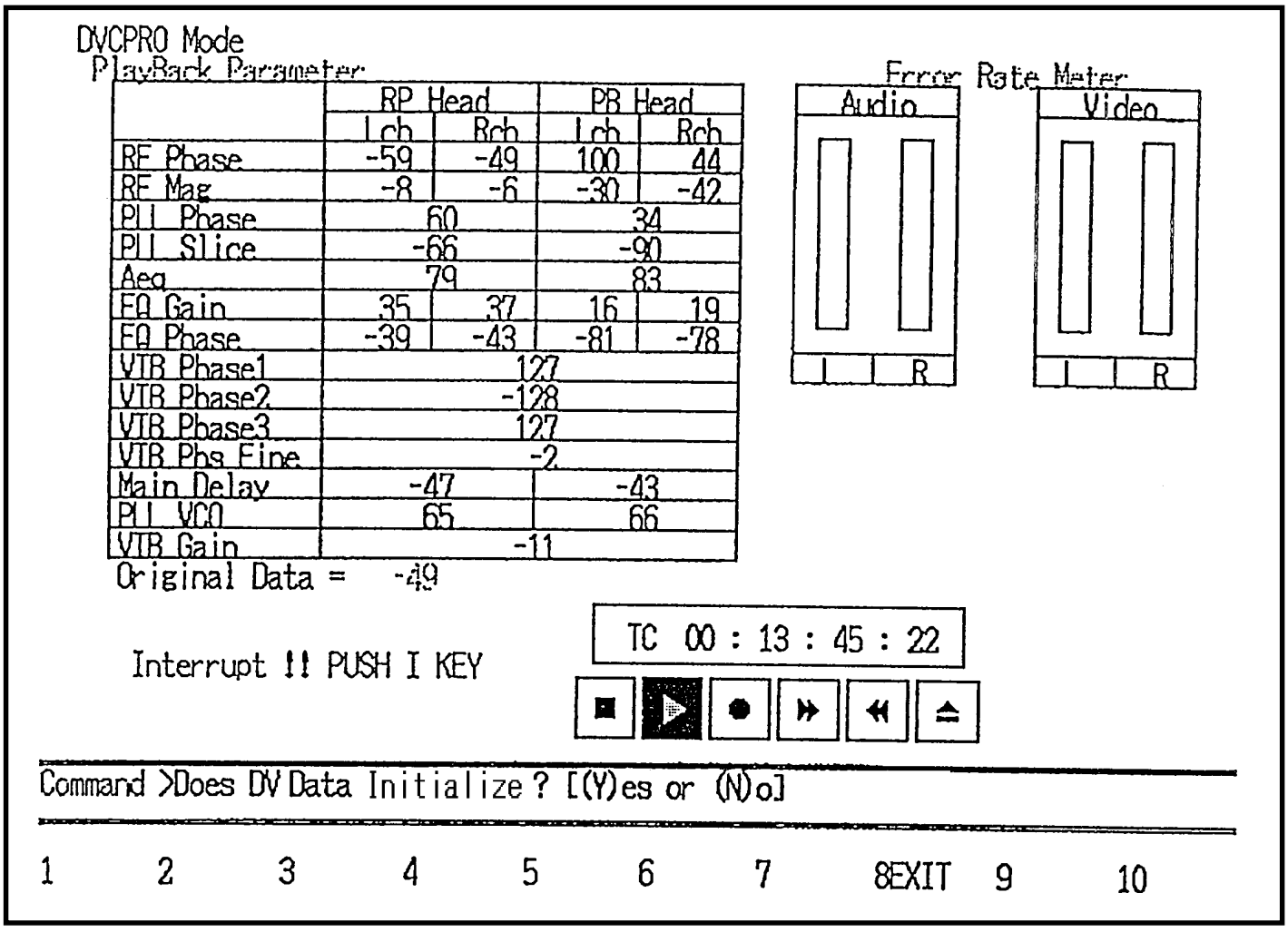

5-1-4. Confirmation of Error Rate (PLAYBACK)

1. After DVCPRO and DV Playback adjustment, measured error rate is automatically displayed as shown below.

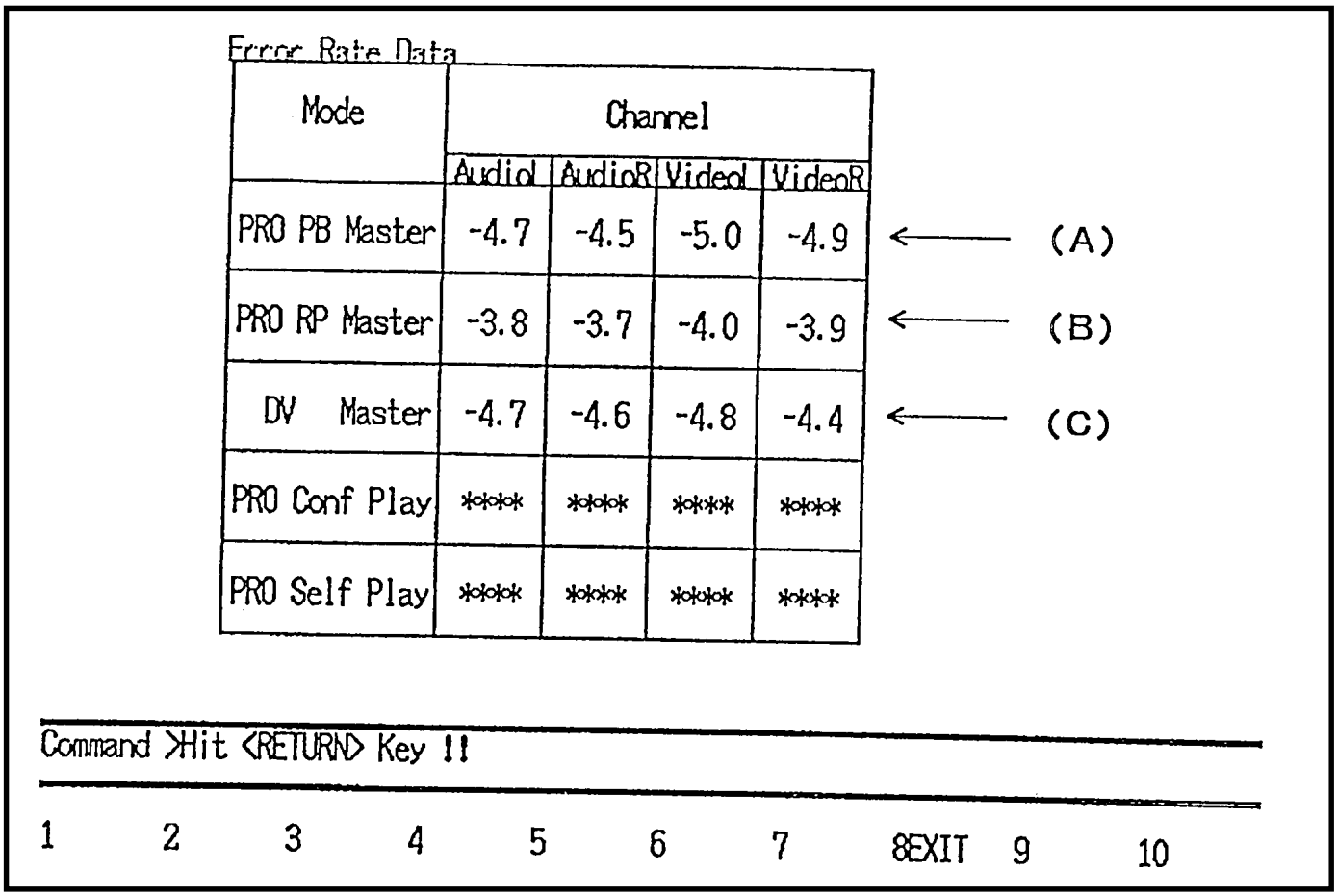

2. Confirm the numbers at (A), (B) and (C) they are displayed in Green.
   If the color is red the error rate is too high.
   Especially the numbers at (A) and (C) must be Green. If part of row of (B) is red, clean the head and the tape transportation and re-adjust the DVCPRO RP Playback adjustment.

<Procedures>

1. If Return key is pressed, Select Menu is displayed and select “3. DVCPRO RP ONLY Adjustment”. Then follow the message on PC and re-adjust RP mode only.
2. After adjustment error rate is automatically displayed.

Confirm the error rate and if they are correct, do the next adjustment.

5-1-5. DVCPRO Recording Adjustment

Start the DVCPRO Recording Adjustment after Playback Adjustment and Error Rate Confirmation.

1. Return to Main Menu. Press Enter key on the Error Rate Display Menu and open the Sub menu.
2. Select “6. Return to manual” and press F1 key (MAIN) and return to Main Menu.
3. Select “2. REC Adjustment” and following “REC Adjustment “ menu is appeared.

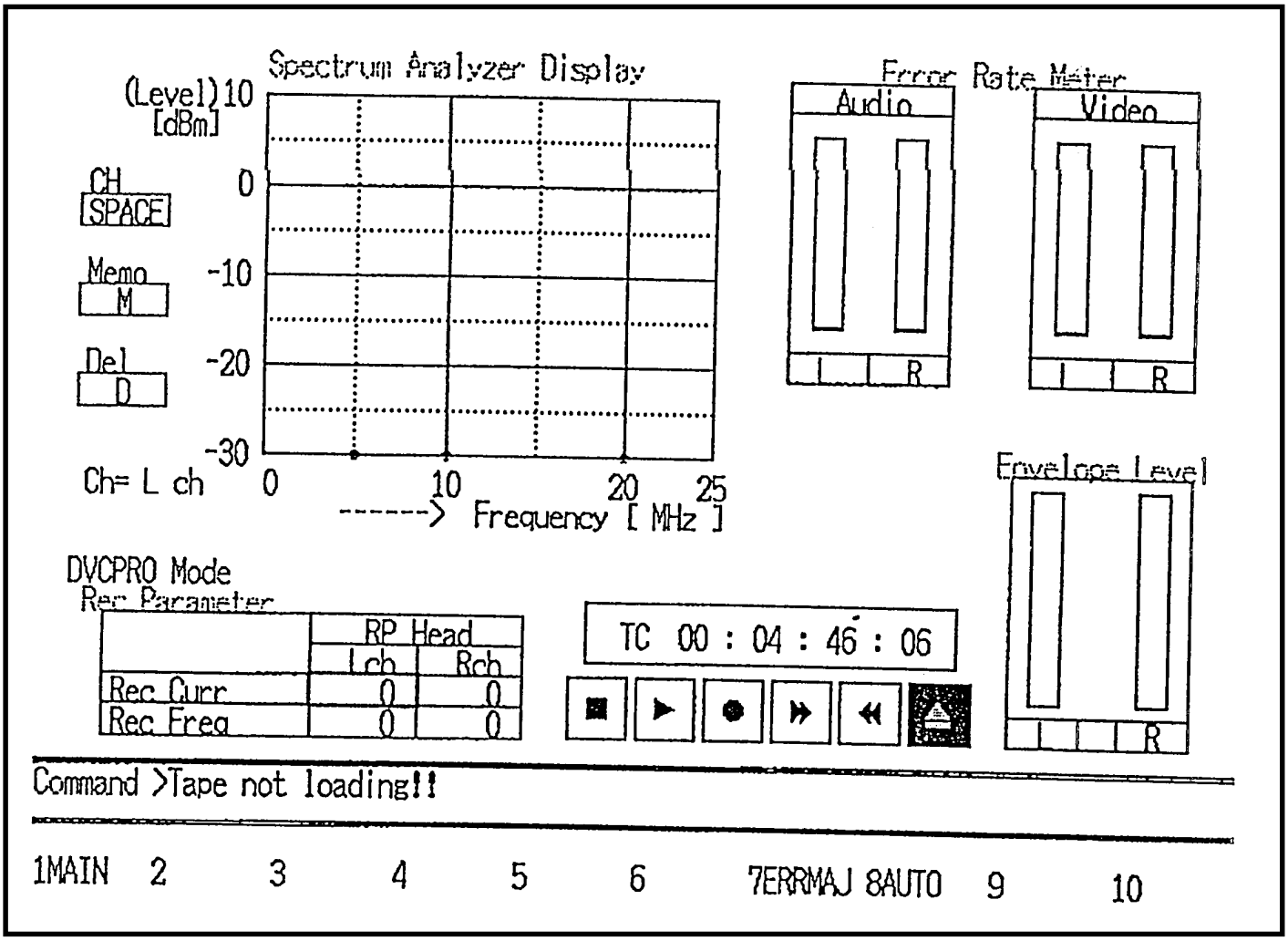

4. Tape not loading message is appeared. For the automatic adjustment press F8 key (AUTO).
5. Select “1. Adjust start” in the Sub Menu.
6. The messaged of “Please Insert DVCPRO MASTER TAPE (COLOR BAR)” is appeared, and insert the DVCPRO color bar master tape. After inserting the master tape, Master level and error rate level are automatically memorized.

7. During data memorizing, following menu is appeared and waveform is appeared in the Spectrum Analyzer Display part.

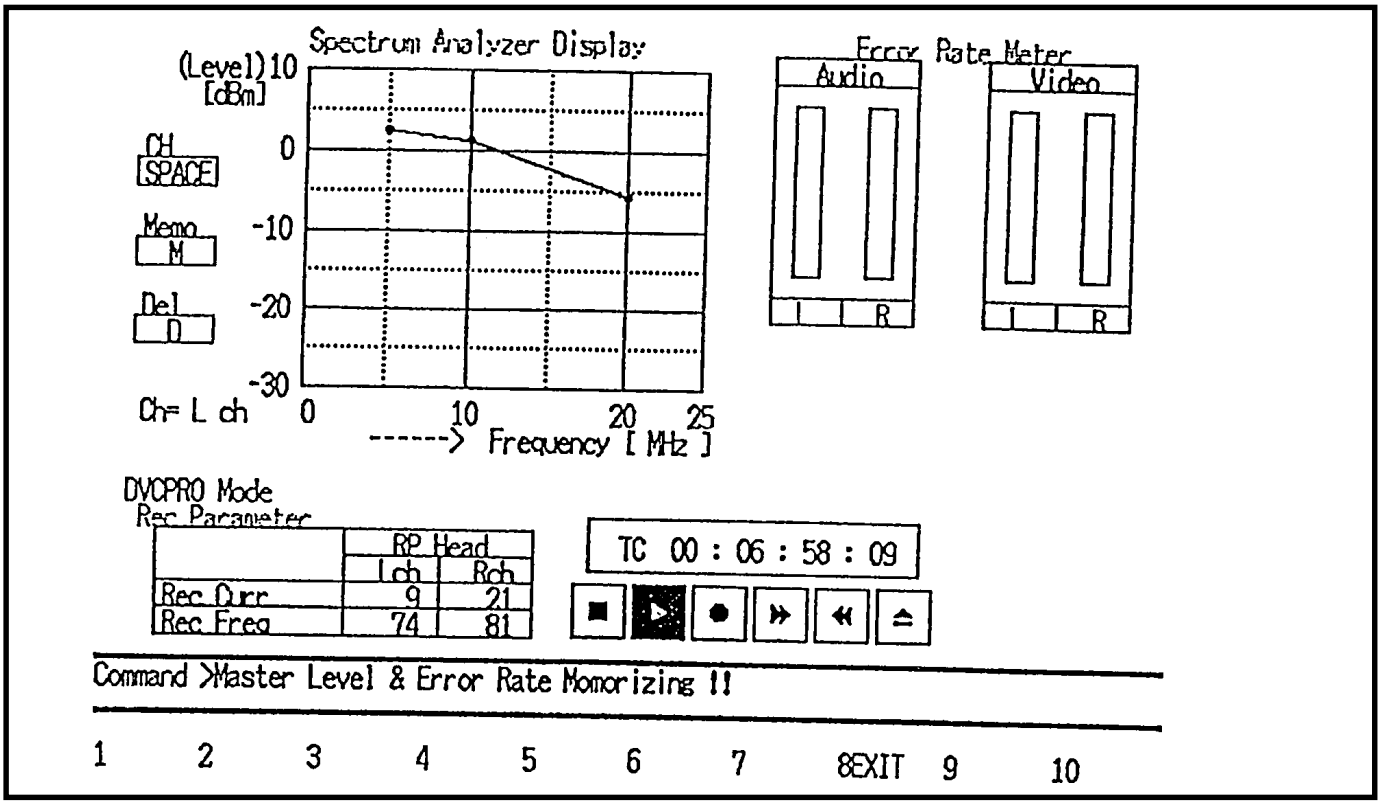

8. Tape is ejected after completion of Master Tape Data Memorizing, and “Please Insert Blank Tape” message is appeared. Then insert self recording and playback tape.
9. Start the Automatic Adjustment.

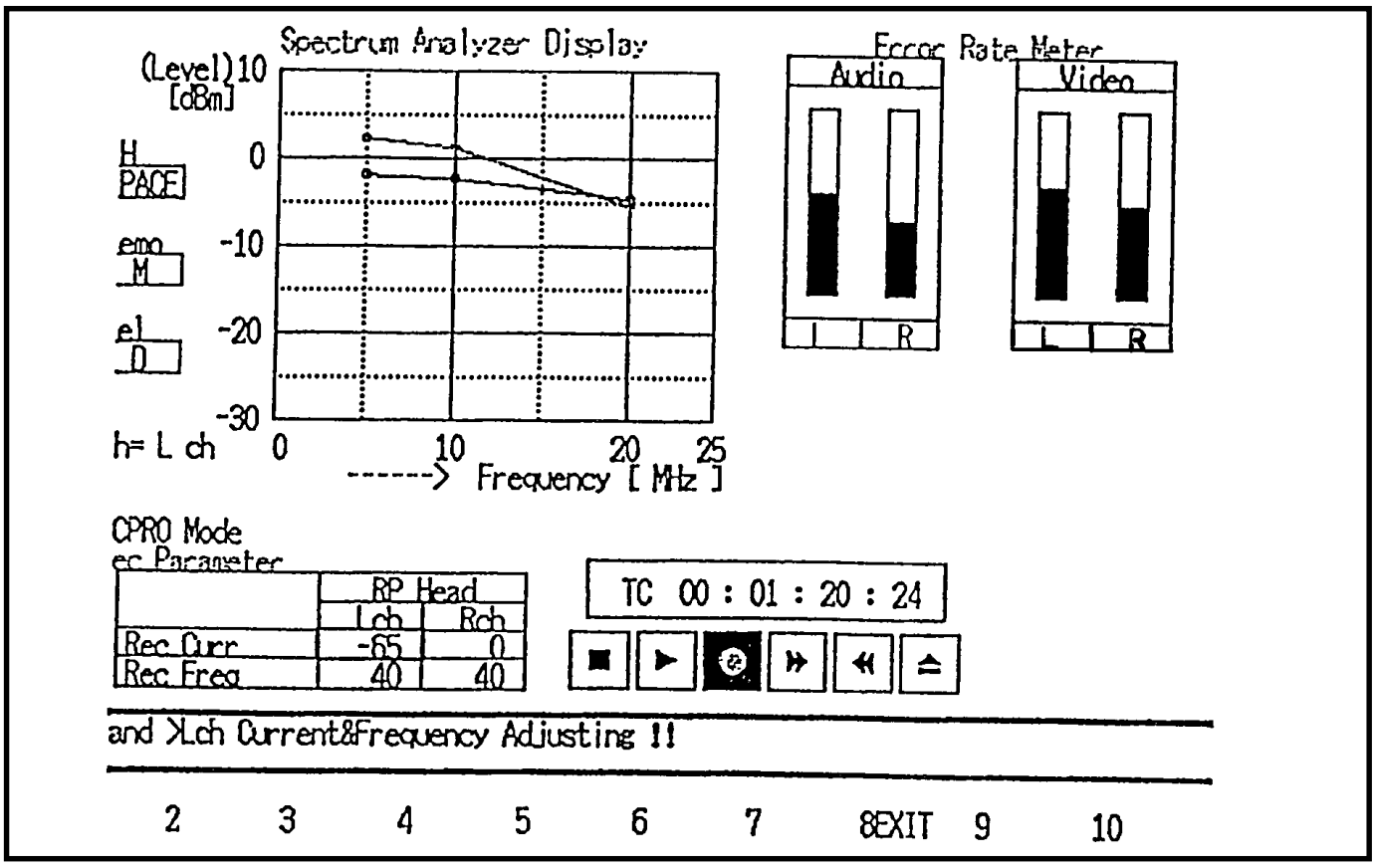

5-1-6.Confirmation of Error Rate (REC)

10. After completion of Automatic Adjustment “<Return> to NEXT STEP” message is appeared, the press Return (ENTER) key.
11. “Please Adjust VC600 and VC601 Trimmer Volume and Minimize Error Rate !!” message is appeared. At this menu, observe the error rate at upper right part of the screen and if the error rate is too high (RED color display), adjust manually VC600 and VC601 on the RF AMP (H4) BOARD. If the error rate display changed to green, press Return (ENTER) key.
12. Automatically goes to Error Rate measurement mode and “Error Rate Checking !!” message is displayed.
13. Error rate is displayed and completion of measurement.

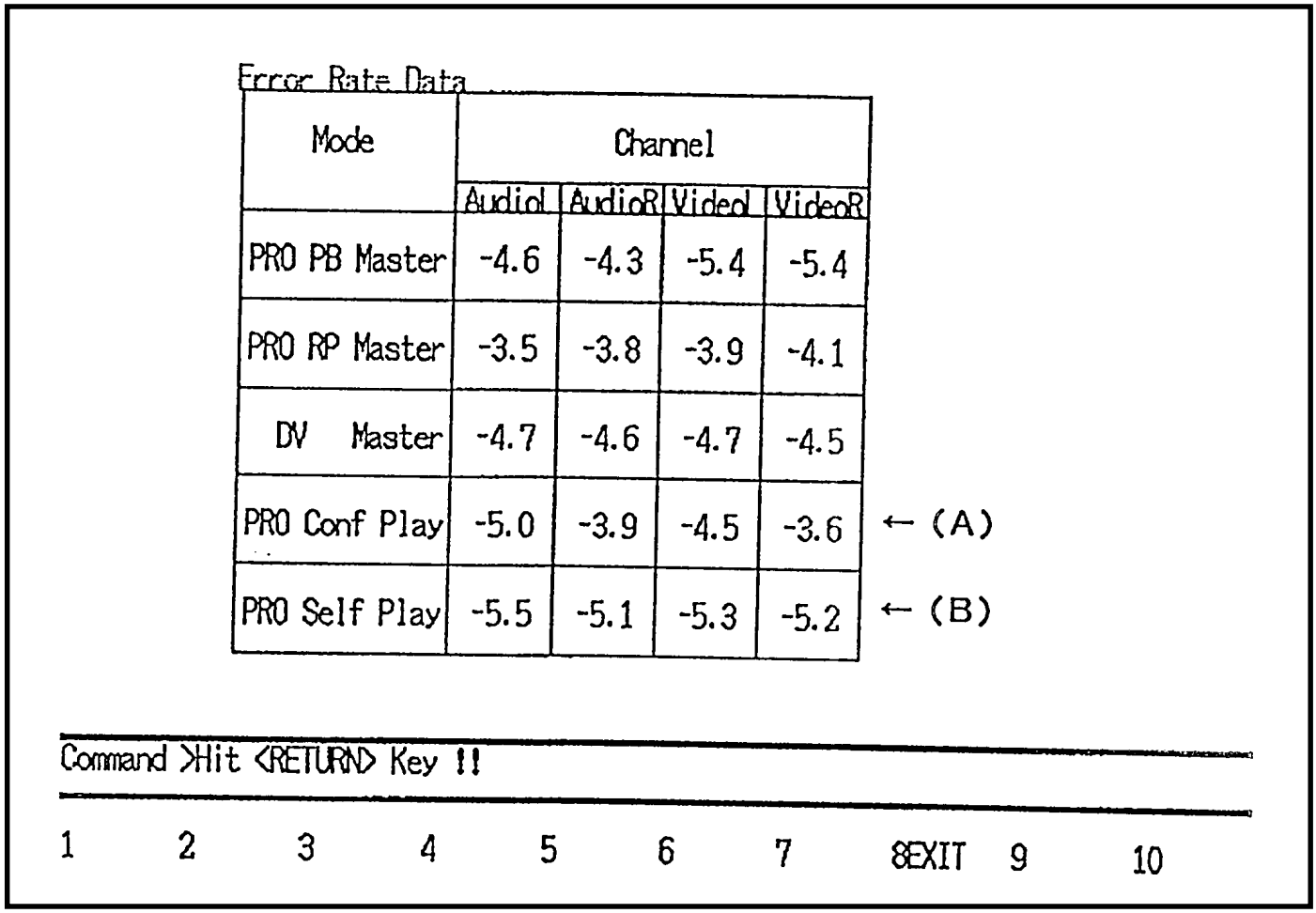

14. The row of (A) shows the error rate for confidence playback, the row of (B) shows the error rate for self recording and playback. Confirm the numbers are displayed in Green color.

Save RF Data and Error Rate Data

RF Adjustment result data and error rate data can be saved.

1. Return to MAIN Menu from Recording Adjustment menu.
2. The procedures are show below.

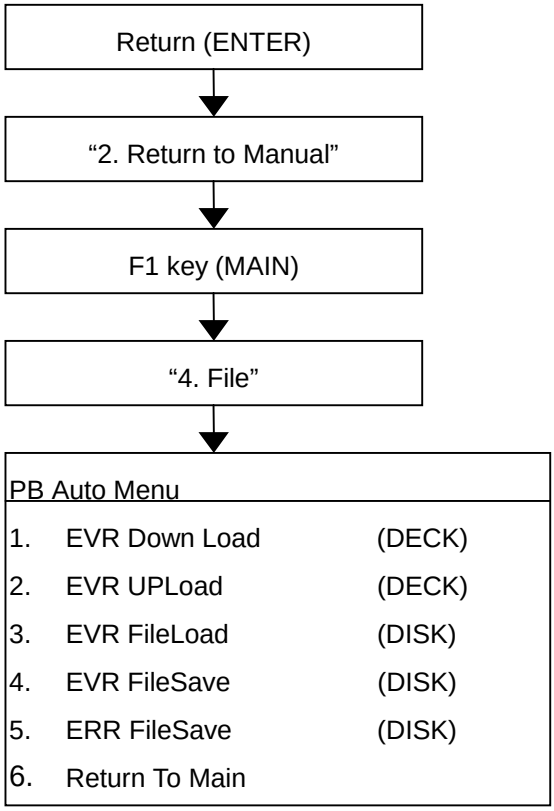

Command>Please Select No!!!!

3. item 3 is EVR data loading, item 4 is EVR data saving and item 5 is Error rate data saving.

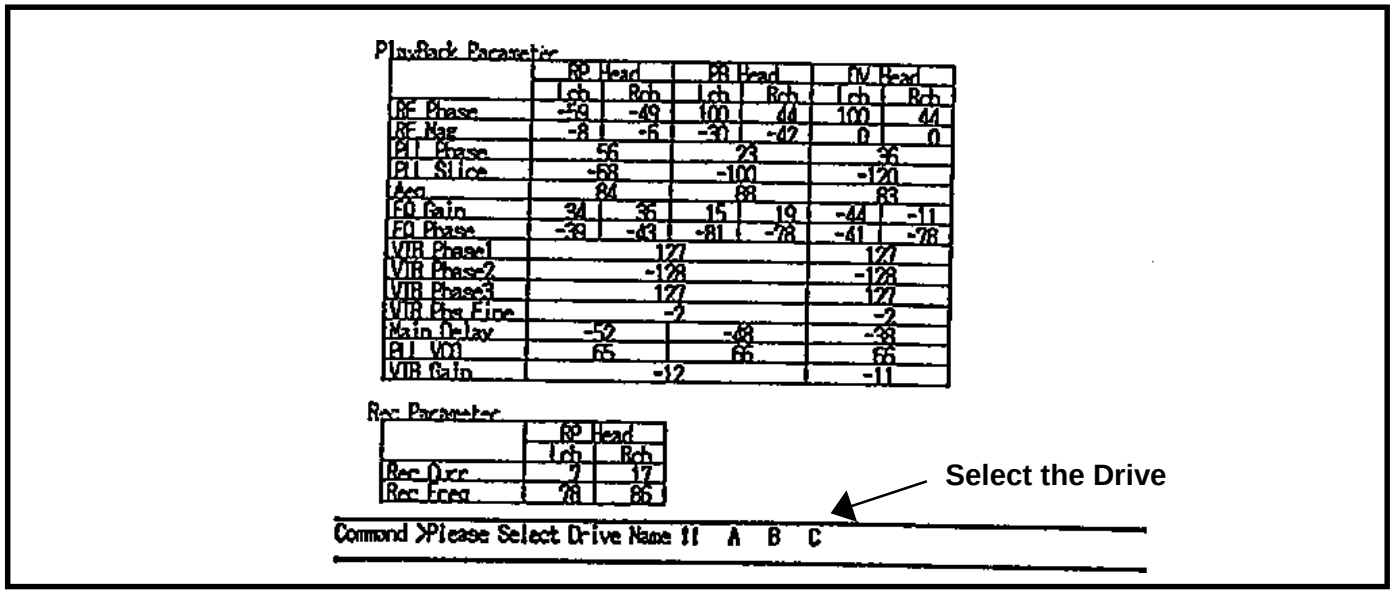

<< EVR File Save >>

1. Select “4. EVR File Save”. All parameters are displayed and select the drive for data saving.
2. Enter the file name and comment after selecting the drive. File name must be in 8 characters, and comment is must be in 20 characters. The adjustment data for VTR can be managed same as linearity data. After enter the File name and comment, Sub-menu is automatically displayed. Then save the EVR data.

<< EVR File Load >>

1. Select “3. EVR File Load (DISK) for reading the EVR data from PC.
2. Select the drive follow the screen message input the saved filename, then EVR data displayed on the screen.
3. When escape from this EVR data display, press “Y” key follow the message “Are You OK“, then return to Sub-menu (File selected menu)

Sub-menu after item 7

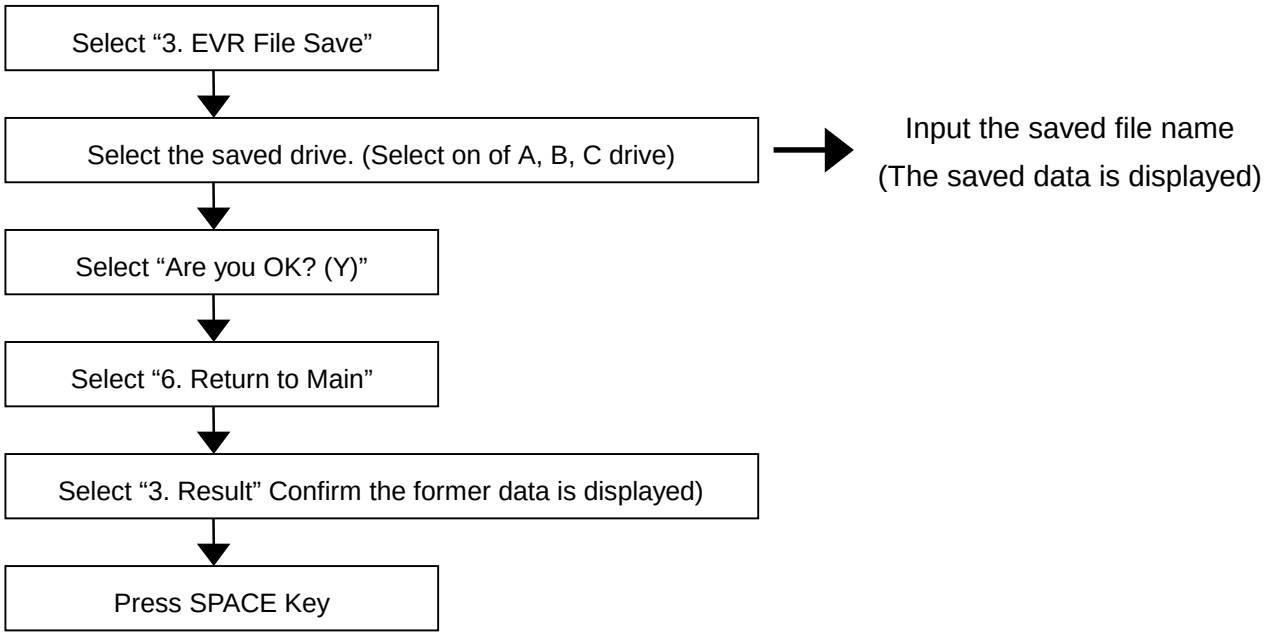

<< Save the Error Data >>

1. Displayed PB Auto Menu as the same as step of introduction <<Save and Reading the EVR Data>>.
2. Select “5. ERR File Save“ on the PB Auto menu.
3. The Error rate data is saved to same directly as AUTO EQ software, which is file “ERRDATA.DAT” Therefore it file can only entry the comment.
4. After input comment, Auto EQ software is executed saving operation and return to PB Auto menu.

<< Load the Error Data >>

1. The saved Error data file read on the Editor after return to Dos mode.
2. The contents of Error data file, which display from left side on the screen “date of saving (month/day/year), comment and error data.”.
3. Order to display of Error data from left side, which display as numerical value of upper left (PRO PB MASTER – Audio L) on the error rate table of Auto EQ software display and next to right numerical value displayed. And next row of numerical value (PRO RP MASTER – Audio L) displayed from left to right direction. Therefore most of right side of numerical value on Editor display, which is numerical value of “PRO Self Play – Video R”.

<< EVR Up Load >>

When EVR file data load to VTR from PC. First EVR file load have to executed follow the procedure on previous page.

1. Select the item “2 EVR UP Load” and press “U” Key follow the message “(D)efault or (U)ser Data Up Load”.
2. After press “U” button appear the message “Up Load Complete!! Are You OK? [(Y)es or (N)o]”, then press (Y) button for up load EVR data to VTR.

<< EVR Down Load >>

Note: The EVR data keep on EQ software until escape DOS mode after Auto EQ adjustment finished. Therefore if you want to save EVR data without execute Auto EQ adjustment, necessary EVR Down Load operation.

1. Select the item "2.EVR Down Load“ and press “U” Key follow the message “(D)efault or (U)ser Down Load”.
2. After press “U” button appear the message “Down Load Complete!! Are You OK? [(Y)es or (N)o]”, then press (Y) button for EVR data down load to PC from VTR.

After finish EVR Down Load, perform “EVR File Save” for file save to disk drive follow the follow the procedure on previous page.

5-2. MANUAL ADJUSTMENT PROCEDURE

NOTE: Setting of Service Menu corresponds to setting of Front switches. (Refer to Error Rate Confirmation Procedure on Section 2.)

RF ADJUSTMENT

5-2-1. Pre EQ Adjustment

BOARD	RF AMP board (H4)
SPEC.	2.5VDC ± 0.2V(DVCPRO) 2.0+0.5V(DV)
TEST	TP20, TP18,TP1 and TP2 (Trigger)
ADJUST	C09:RP MAG L, C10:RP MAG R, C13:PB MAG L, C14:PB MAG R (EVR on RF ADJUST menu)
MODE	PLAY
TAPE	DV Alignment tape (NTSC: VFM3010EDS, PAL: VFM3110EDS) DVCPRO Alignment tape (NTSC: VFM3580KM, PAL: VFM3680KM)
M.EQ	Oscilloscope Monitor TV (Connect to VIDEO 3 OUT)

1. Open the RF ADJUST menu on the Service Menu.
2. Connect the Scope to TP1 for trigger.
3. Connect the Scope to TP20 with 10:1 probe and connect the ground to TG9.
4. Playback a colour bar portion of the DV Alignment Tape.
5. Adjust EVR ”C09:RP MAG L” and “C10:RP MAG R” so that the DC voltage is become 2.0V+0.5V.
6. Playback a colour portion of DVCPRO Alignment Tape.
7. Adjust EVR ”C09:RP MAG L” and “C10:RP MAG R” so that the DC voltage is become 2.5V+0.5V.
8. Connect the scope to TP18 with 10:1 probe and connect the ground to TG9.
9. Connect the scope to TP2 for trigger.
10. Adjust EVR ”C13:PB MAG L” and EVR “C14:PB MAG R” so that the DC voltage is become 2.0V+0.5V.

Note: How to adjust the EVR.

(1) Press the MENU button on the front bottom panel, then “Service Menu“ appeared on the screen.
(2) Select the item “ C00: RF ADJUST “ by JOG Dial and press the SET button on the front bottom panel then open “ RF ADJUST “ menu.
(3) Select the adjustment item by JOG Dial, then move The start mark (*) to the adjusting item.
(4) Adjustment became available by pressing JOG/SHTL button, then rotating JOG Dial.

5-2-2. RF AMP PB Phase Adjustment

BOARD	RF AMP board (H4)
SPEC.	Minimum of Error Rate
TEST	Front Display
ADJUST	C07:RP PHASE L, C08:RP PHASE R C11:PB PHASE L, C12:PB PHASE R (EVR on RF ADJUST menu)
MODE	PLAY
TAPE	DV Alignment tape (NTSC: VFM3010EDS, PAL: VFM3110EDS) DVCPRO Alignment tape (NTSC: VFM3580KM, PAL: VFM3680KM)
M.EQ	Monitor TV (Connect to VIDEO 3 OUT)

1. Set the switches as shown below
   Front Bottom CF:4F
2. Open the RF Adjust menu on the Service menu and set as follows.

C20	ERROR MODE	FAST
C19	PB MODE	RP H
C18	VITERBI MODE	ON
C17	CONCEAL MODE	OFF
C16	ECC MODE	AL OFF

3. Playback the DV colour bar portion of Alignment Tape.
4. Adjust EVR “C07: RP PHASE L” and “C08:RP PHASE R” so that the error rate is minimum.
5. Playback the colour bar portion of DVCPRO Alignment tape.
6. Adjust EVR “C07:RP PHASE L” and “C08:RP PHASE R” so that the error rate is minimum.
7. Set the item “C19:PB MODE” to PB H.
8. Adjust “C11:PB PHASE L” and “C12:PB PHASE R” so that the error rate is minimum.

5-3. EQ ADJUSTMENT

5-3-1. PLL Lock Adjustment (PB)

BOARD	EQ Board (H3)
SPEC.	----------
TEST	TP403, Monitor
ADJUST	VR410, B01:PB PLL PHASE, B02:PB PLL SLICE (EVR on EQ ADJUST menu)
INPUT	----------
MODE	PLAY
TAPE	NTSC: VFM3580KM PAL: VFM3680KM
M.EQ	Monitor TV Oscilloscope

1. Set the Error Rate display mode.
2. Open the EQ ADJUST menu on Service Menu and set as follows.

B28	ERROR MODE	FAST
B27	PB MODE	PB H
B26	VITERBI MODE	OFF
B25	CONCEAL MODE	OFF
B24	ECC MODE	AL OFF

3. Playback the Alignment tape and confirm the picture is appeared on the monitor.
4. If picture is not appeared, adjust following items
   (1) Connect the scope to TP403 and adjust VR410 so that the DC voltage is become 2.1VDC.
   (2) Adjust “B01:PB PLL PHASE” and “B02:PB PLL SLICE” so that the picture appears on the monitor.
5. Repeat STOP to PLAY mode, and confirm the Picture is surely appeared every time.

5-3-2. PLL Latch Phase Coarse Adjustment (PB)

BOARD	EQ Board (H3)
SPEC.	Error Rate Minimum
TEST	Error Rate Level Meter (Front display)
ADJUST	B01:PB PLL PHASE (EVR on EQ ADJUST menu)
INPUT	----------
MODE	PLAY
TAPE	NTSC: VFM3580KM PAL: VFM3680KM
M.EQ	Monitor TV

1. Set the Error Rate display mode.
2. Open the EQ ADJUST menu on Service menu and set as follows.

B28	ERROR MODE	FAST
B27	PB MODE	PB H
B26	VITERBI MODE	OFF
B25	CONCEAL MODE	OFF
B24	ECC MODE	AL OFF

3. Playback the Alignment tape.
4. Adjust “B01:PB PLL PHASE” so that the video error rate becomes minimum.

5-3-3. PLL Slice Level Coarse Adjustment (PB)

BOARD	EQ Board (H3)
SPEC.	Error Rate Minimum
TEST	Error Rate Level Meter (Front display)
ADJUST	B02:PB PLL SLICE (EVR on EQ ADJUST menu)
INPUT	----------
MODE	PLAY
TAPE	NTSC: VFM3580KM PAL: VFM3680KM
M.EQ	Monitor TV

1. Set the Error Rate display mode.
2. Open the EQ ADJUST menu on Service menu and set as follows.

B28	ERROR MODE	FAST
B27	PB MODE	PB H
B26	VITERBI MODE	OFF
B25	CONCEAL MODE	OFF
B24	ECC MODE	AL OFF

3. Playback the Alignment tape.
4. Adjust “B02:PB PLL SLICE” so that the video error rate becomes minimum.

5-3-4. EQ Adjustment (1) (PB)

BOARD	EQ Board (H3)
SPEC.	Error Rate Minimum
TEST	Error Rate Level Meter (Front display)
ADJUST	B19:PB MAIN DL (EVR on EQ ADJUST menu)
INPUT	----------
MODE	PLAY
TAPE	NTSC: VFM3580KM PAL: VFM3680KM
M.EQ	Monitor TV

1. Set the Error Rate display mode.
2. Open the EQ ADJUST menu on Service menu and set as follows.

B28	ERROR MODE	FAST
B27	PB MODE	PB H
B26	VITERBI MODE	OFF
B25	CONCEAL MODE	OFF
B24	ECC MODE	AL OFF

3. Playback the Alignment tape.
4. Adjust “B19:PB MAIN DL” so that the video error rate is minimum.

5-3-5. EQ Adjustment (2) (PB)

BOARD	EQ Board (H3)
SPEC.	Error Rate Minimum
TEST	Error Rate Level Meter (Front display)
ADJUST	B03:PB AEQ, B04:PB GAIN L, B05:PB PHASE L, B06:PB GAIN R, B07:PB PHASE R (EVR on EQ ADJUST menu)
INPUT	----------
MODE	PLAY
TAPE	NTSC: VFM3580KM PAL: VFM3680KM
M.EQ	Monitor TV

1. Set the Error Rate display mode.
2. Open the EQ ADJUST menu on Service menu and set as follows.

B28	ERROR MODE	FAST
B27	PB MODE	PB H
B26	VITERBI MODE	OFF
B25	CONCEAL MODE	OFF
B24	ECC MODE	AL OFF

3. Playback the Alignment tape.
4. Adjust each adjustment item so that the each portions error rate becomes minimum as shown in the table.

Procedures	Adjust VR	Error Rate Portion
1	PB AEQ	VIDEO R & L CH
2	PB GAIN L	VIDEO L CH
3	PB PHASE L	VIDEO L CH
4	PB GAIN R	VIDEO R CH
5	PB PHASE R	VIDEO R CH

5-3-6. PLL Latch Phase Fine Adjustment (PB)

BOARD	EQ Board (H3)
SPEC.	Error Rate Minimum
TEST	Error Rate Level Meter (Front display)
ADJUST	B01:PB PLL PHASE (EVR on EQ ADJUST menu)
INPUT	----------
MODE	PLAY
TAPE	NTSC: VFM3580KM PAL: VFM3680KM
M.EQ	Monitor TV

1. Set the Error Rate display mode.
2. Open the EQ ADJUST menu on Service menu and set as follows.

B28	ERROR MODE	FAST
B27	PB MODE	PB H
B26	VITERBI MODE	OFF
B25	CONCEAL MODE	OFF
B24	ECC MODE	AL OFF

3. Playback the Alignment tape.
4. Adjust “B01:PB PLL PHASE” so that the video error rate becomes minimum.

5-3-7. PLL Slice Level Fine Adjustment (PB)

BOARD	EQ Board (H3)
SPEC.	Error Rate Minimum
TEST	Error Rate Level Meter (Front display)
ADJUST	B02:PB PLL SLICE (EVR on EQ ADJUST menu)
INPUT	----------
MODE	PLAY
TAPE	NTSC: VFM3580KM PAL: VFM3680KM
M.EQ	Monitor TV

1. Set the Error Rate display mode.
2. Open the EQ ADJUST menu on Service menu and set as follows.

B28	ERROR MODE	FAST
B27	PB MODE	PB H
B26	VITERBI MODE	OFF
B25	CONCEAL MODE	OFF
B24	ECC MODE	AL OFF

3. Playback the Alignment tape.
4. Adjust “B02:PB PLL SLICE” so that the video error rate becomes minimum.

5-3-8. Viterbi A/D Input Level Adjustment

BOARD	EQ Board (H3)
SPEC.	Error Rate Minimum
TEST	Center of VR409 pattern Error Rate Level Meter (Front display)
ADJUST	B23:VITABI GAIN, VR801, (EVR on EQ ADJUST menu)
INPUT	----------
MODE	PLAY
TAPE	NTSC: VFM3580KM PAL: VFM3680KM
M.EQ	Monitor TV

1. Set the Error Rate display mode.
2. Open the EQ ADJUST menu on Service menu and set as follows.

B28	ERROR MODE	FAST
B27	PB MODE	PB H
B26	VITERBI MODE	ON
B25	CONCEAL MODE	OFF
B24	ECC MODE	AL OFF

3. Playback the Alignment tape.
4. Adjust “B23:VTB GAIN” so that the video error rate becomes minimum.
5. Connect the Electric Volt Meter to “ Center of VR409 Pattern “ as shown as below figure and confirm the DC voltage is 2.1V DC to 2.4VDC. If it is not, adjust VR801.

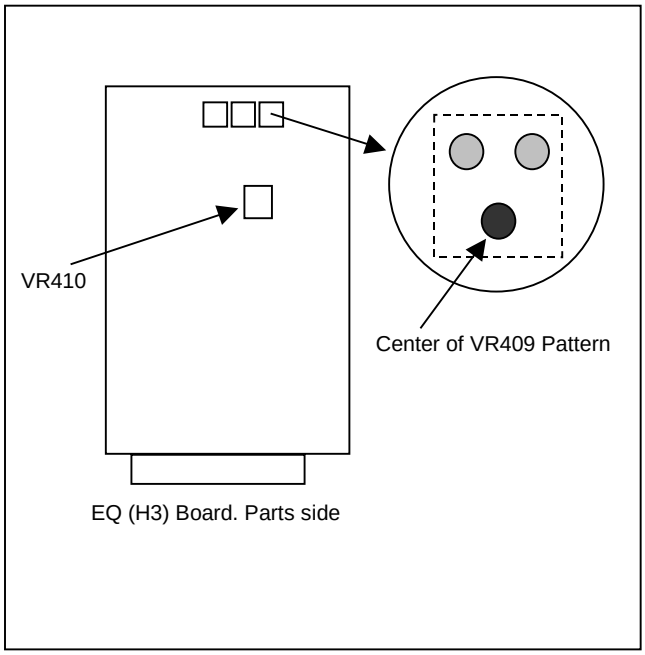

5-3-9. PLL Lock Adjustment (R/P)

BOARD	EQ Board (H3)
SPEC.	----------
TEST	TP203, Monitor TV
ADJUST	VR210, B08:RP PLL PHASE, B09:RP PLL SLICE (EVR on EQ ADJUST menu)
INPUT	----------
MODE	PLAY
TAPE	NTSC: VFM3580KM PAL: VFM3680KM
M.EQ	Monitor TV

1. Set the Error Rate display mode.
2. Open the EQ ADJUST menu on Service menu and set as follows.

B28	ERROR MODE	FAST
B27	PB MODE	RP H
B26	VITERBI MODE	OFF
B25	CONCEAL MODE	OFF
B24	ECC MODE	AL OFF

3. Playback the Alignment tape and confirm the picture appears on the monitor.
4. If the picture is not appeared adjust following items.
   (1) Connect the Electric Volt Meter to TP203 and adjust VR210 so that the DC voltage is 2.1VDC.
   (2) Adjust “B08:RP PLL PHASE” and “B09:RP PLL SLICE so that the picture appears on the monitor.
5. Repeat STOP to PLAY and confirm the picture is surely appeared.

5-3-10. PLL Latch Phase Adjustment (R/P)

BOARD	EQ Board (H3)
SPEC.	Error Rate minimum
TEST	Error Rate Level Meter (Front display)
ADJUST	B08:RP PLL PHASE (EVR on EQ ADJUST menu)
INPUT	----------
MODE	PLAY
TAPE	NTSC: VFM3580KM PAL: VFM3680KM
M.EQ	Monitor TV

1. Set the Error Rate display mode.
2. Open the EQ ADJUST menu on Service menu and set as follows.

B28	ERROR MODE	FAST
B27	PB MODE	RP H
B26	VITERBI MODE	OFF
B25	CONCEAL MODE	OFF
B24	ECC MODE	AL OFF

3. Playback the Alignment tape.
4. Adjust “B08:RP PLL PHASE” so that the video error rare is minimum.

5-3-11. PLL Slice Level Adjustment (R/P)

BOARD	EQ Board (H3)
SPEC.	Error Rate minimum
TEST	Error Rate Level Meter (Front display)
ADJUST	B09:RP PLL SLICE (EVR on EQ ADJUST menu)
INPUT	----------
MODE	PLAY
TAPE	NTSC: VFM3580KM PAL: VFM3680KM
M.EQ	Monitor TV

1. Set the Error Rate display mode.
2. Open the EQ ADJUST menu on Service menu and set as follows.

B28	ERROR MODE	FAST
B27	PB MODE	RP H
B26	VITERBI MODE	OFF
B25	CONCEAL MODE	OFF
B24	ECC MODE	AL OFF

3. Playback the Alignment tape.
4. Adjust “B09:RP PLL SLICE” so that the video error rare is minimum.

5-3-12. EQ Adjustment (1) (R/P)

BOARD	EQ Board (H3)
SPEC.	Error Rate minimum
TEST	Error Rate Level Meter (Front display)
ADJUST	B20:RP MAIN DL (EVR on EQ ADJUST menu)
INPUT	----------
MODE	PLAY
TAPE	NTSC: VFM3580KM PAL: VFM3680KM
M.EQ	Monitor TV

1. Set the Error Rate display mode.
2. Open the EQ ADJUST menu on Service menu and set as follows.

B28	ERROR MODE	FAST
B27	PB MODE	RP H
B26	VITERBI MODE	OFF
B25	CONCEAL MODE	OFF
B24	ECC MODE	AL OFF

3. Playback the Alignment tape.
4. Adjust “B20:RP MAIN DL” so that the video error rare is minimum.

5-3-13. EQ Adjustment (2) (R/P)

BOARD	EQ Board (H3)
SPEC.	Error Rate minimum
TEST	Error Rate Level Meter (Front display)
ADJUST	B10:RP AEQ, B11:RP GAIN L, B12:RP PHASE L, B13:RP GAIN R B14:RP PHASE R (EVR on EQ ADJUST menu)
INPUT	----------
MODE	PLAY
TAPE	NTSC: VFM3580KM PAL: VFM3680KM
M.EQ	Monitor TV

1. Set the Error Rate display mode on VTR.
2. Open the EQ ADJUST menu on Service menu and set as follows.

B28	ERROR MODE	FAST
B27	PB MODE	RP H
B26	VITERBI MODE	OFF
B25	CONCEAL MODE	OFF
B24	ECC MODE	AL OFF

3. Playback the Alignment tape.
4. Adjust the each EVR so that the error rate is minimum.

Procedures	Adjust VR	**Correspond of Error Rate Portion**
1	RP AEQ	VIDEO R & L CH
2	RP GAIN L	VIDEO L CH
3	RP PHASE L	VIDEO L CH
4	RP GAIN R	VIDEO R CH
5	RP PHASE R	VIDEO R CH

5-3-14.PLL Latch Phase Fine Adjustment (R/P)

BOARD	EQ Board (H3)
SPEC.	Error Rate minimum
TEST	Error Rate Level Meter (Front display)
ADJUST	B08:RP PLL PHASE (EVR on EQ ADJUST menu)
INPUT	----------
MODE	PLAY
TAPE	NTSC: VFM3580KM PAL: VFM3680KM
M.EQ	Monitor TV

1. Set the Error Rate display mode on VTR.
2. Open the EQ ADJUST menu on Service menu and set as follows.

B28	ERROR MODE	FAST
B27	PB MODE	RP H
B26	VITERBI MODE	OFF
B25	CONCEAL MODE	OFF
B24	ECC MODE	AL OFF

3. Playback the Alignment tape.
4. Adjust RP PLL PHASE so that the error rate is minimum.

5-3-15. PLL Slice Level Fine Adjustment (R/P)

BOARD	EQ Board (H3)
SPEC.	Error Rate minimum
TEST	Error Rate Level Meter (Front display)
ADJUST	B09:RP PLL SLICE (EVR on EQ ADJUST menu)
INPUT	----------
MODE	PLAY
TAPE	NTSC: VFM3580KM PAL: VFM3680KM
M.EQ	Monitor TV

1. Set the Error Rate display mode on VTR.
2. Open the EQ ADJUST menu on Service menu and set as follows.

B28	ERROR MODE	FAST
B27	PB MODE	RP H
B26	VITERBI MODE	OFF
B25	CONCEAL MODE	OFF
B24	ECC MODE	AL OFF

3. Playback the Alignment tape.
4. Adjust “B09:RP PLL SLICE” so that the error rate is minimum.

5-3-16. PLL Lock Confirmation (Consumer DV)

BOARD	EQ Board (H3)
SPEC.	----------
TEST	Monitor TV
ADJUST	B02:PB PLL SLICE (EVR on EQ ADJUST menu)
INPUT	----------
MODE	PLAY
TAPE	(Consumer DV Alignment Tape) NTSC:VFM3010EDS, PAL:VFM3110EDS
M.EQ	Monitor TV

1. Set the Error Rate display mode on VTR.
2. Open the EQ ADJUST menu on Service menu and set as follows.

B28	ERROR MODE	FAST
B27	PB MODE	RP H
B26	VITERBI MODE	OFF
B25	CONCEAL MODE	OFF
B24	ECC MODE	AL OFF

3. Playback the Alignment tape and confirm the picture appears on the monitor.
   If picture is not appeared adjust “B02:PB PLL SLICE.” so that the picture appears on the monitor.
4. Repeat STOP to PLAY and confirm the picture is surely appeared.

5-3-17. PLL Slice Level Coarse Adjustment (Consumer DV)

BOARD	EQ Board (H3)
SPEC.	Error Rate Minimum
TEST	Error Rate Level Meter (Front display)
ADJUST	B02:PB PLL SLICE (EVR on EQ ADJUST menu)
INPUT	----------
MODE	PLAY
TAPE	(Consumer DV Alignment Tape) NTSC:VFM3010EDS, PAL:VFM3110EDS
M.EQ	Monitor TV

1. Set the Error Rate display mode.
2. Open the EQ ADJUST menu on Service menu and set as follows.

B28	ERROR MODE	FAST
B27	PB MODE	RP H
B26	VITERBI MODE	OFF
B25	CONCEAL MODE	OFF
B24	ECC MODE	AL OFF

3. Playback the Alignment tape.
4. Adjust “B02:PB PLL SLICE”, so that the video error rate is minimum.

5-3-18. EQ Adjustment (1) (Consumer DV)

BOARD	EQ (H3)
SPEC.	Error Rate Minimum
TEST	Error Rate Level Meter (Front display)
ADJUST	B19:PB MAIN DL (EVR on EQ ADJUST menu)
INPUT	----------
MODE	PLAY
TAPE	(Consumer DV Alignment Tape) NTSC:VFM3010EDS, PAL:VFM3110EDS
M.EQ	Monitor TV

1. Set the Error Rate display mode.
2. Open the EQ ADJUST menu on Service menu and set as follows.

B28	ERROR MODE	FAST
B27	PB MODE	RP H
B26	VITERBI MODE	OFF
B25	CONCEAL MODE	OFF
B24	ECC MODE	AL OFF

3. Playback the Alignment tape.
4. Adjust “B19:PB MAIN DL” so that the video error rate is minimum.

5-3-19. EQ Adjustment (2) (Consumer DV)

BOARD	EQ Board (H3)
SPEC.	Error Rate Minimum
TEST	Error Rate Level Meter (Front display)
ADJUST	B03:PB AEQ, B04:PB GAIN L, B05:PB PHASE L, B06:PB GAIN R, B07:PB PHASE R (EVR on EQ ADJUST menu)
INPUT	----------
MODE	PLAY
TAPE	(Consumer DV Alignment Tape) NTSC:VFM3010EDS, PAL:VFM3110EDS
M.EQ	Monitor TV

1. Set the Error Rate display mode.
2. Open the EQ ADJUST menu on Service menu and set as follows.

B28	ERROR MODE	FAST
B27	PB MODE	RP H
B26	VITERBI MODE	OFF
B25	CONCEAL MODE	OFF
B24	ECC MODE	AL OFF

3. Playback the Alignment tape.
4. Adjust each EVR so that the error rate is minimum.

Procedures	Adjust VR	Correspond of Error Rate Portion
1	PB AEQ	VIDEO R & L CH
2	PB GAIN L	VIDEO L CH
3	PB PHASE L	VIDEO L CH
4	PB GAIN R	VIDEO R CH
5	PB PHASE R	VIDEO R CH

5-3-20. PLL Slice Level Fine Adjustment (Consumer DV)

BOARD	EQ Board (H3)
SPEC.	Error Rate Minimum
TEST	Error Rate Level Meter (Front display)
ADJUST	B08:PB PLL PHASE (EVR on EQ ADJUST menu)
INPUT	----------
MODE	PLAY
TAPE	(Consumer DV Alignment Tape) NTSC:VFM3010EDS, PAL:VFM3110EDS
M.EQ	Monitor TV

1. Set the Error Rate display mode.
2. Open the EQ ADJUST menu on Service menu and set as follows.

B28	ERROR MODE	FAST
B27	PB MODE	RP H
B26	VITERBI MODE	OFF
B25	CONCEAL MODE	OFF
B24	ECC MODE	AL OFF

3. Playback the Alignment tape.
4. Adjust “B08:PB PLL SLICE” so that the video error rate becomes minimum.

5-3-21. Consumer DV Viterbi Confirmation

BOARD	EQ Board (H3)
SPEC.	Error Rate Minimum
TEST	Error Rate Level Meter (Front display)
ADJUST	B23:VTB GAIN, B01:PB PLL PHASE (EVR on EQ ADJUST menu)
INPUT	----------
MODE	PLAY
TAPE	(Consumer DV Alignment Tape) NTSC:VFM3010EDS, PAL:VFM3110EDS
M.EQ	Monitor TV

1. Set the Error Rate display mode.
2. Open the EQ ADJUST menu on Service menu and set as follows.

B28	ERROR MODE	FAST
B27	PB MODE	PB H
B26	VITERBI MODE	OFF
B25	CONCEAL MODE	OFF
B24	ECC MODE	AL OFF

3. Playback the Alignment tape.
4. Confirm the error rate is improved by Viterbi on. The improvement can be confirmed by the error rate meter decrease 5 scale on the front audio meter.
5. If the error rate is not improved so much, adjust "B23:VTB GAIN" and "B01:PB PLL PHASE".

5-3-22.Final confirmation of Error Rate.

BOARD	EQ Board (H3)
SPEC.	DVCPRO (PB mode) : under the A DVCPRO (Confi mode) :under the C DV (PB mode) : under the B
TEST	Error Rate Level Meter (Front display)
MODE	PLAY, REC
TAPE	(DVCPRO Alignment Tape) NTSC: VFM3580KM, PAL: VFM3680KM (Consumer DV Alignment Tape) NTSC:VFM3110EDS, PAL:VFM3110EDS Blank Tape
M.EQ	Monitor TV

1. Set the Error Rate display mode
2. Open the EQ ADJUST menu on Service menu and set as follows.

ITEM of the MENU	DVCPRO	DV
B28: ERROR MODE	FAST	FAST
B27: PB MODE	PB H	RP H
B26: VITERBI MODE	ON	ON
B25: CONCEAL MODE	ON	ON
B24: ECC MODE	AL OFF	AL OFF

Confirm that the Error rate in specification, on DVCPRO playback, REC(confi) and DV playback mode.

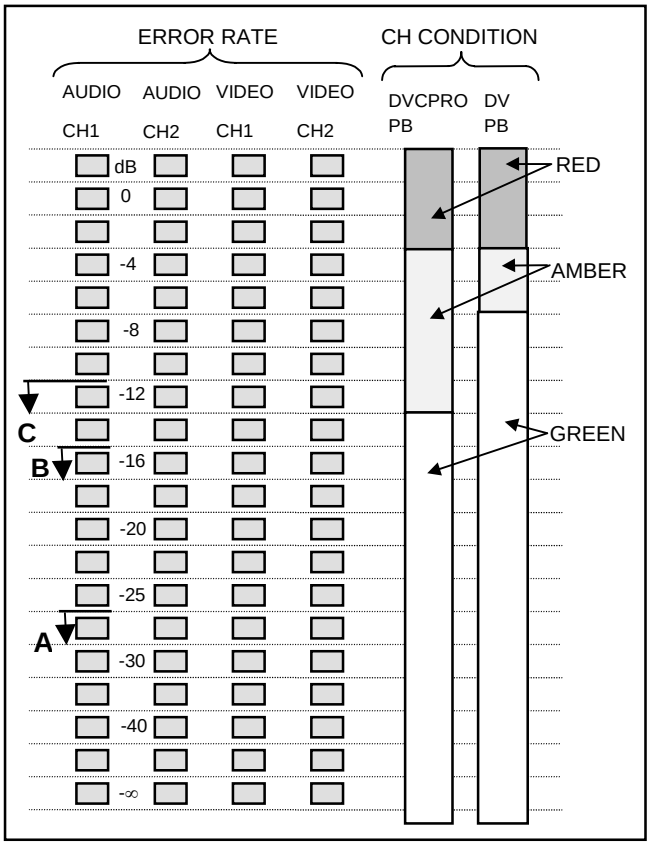

5-4. REC AMP Board

5-4-1. REC Current, Frequency Characteristic Adjustment

BOARD	RF AMP (H4)
SPEC.	----------
TEST	TP17,TG7 (GND), TP2 (TRIG)
ADJUST	C01:REC CURR L, C03:REC CUR R C02:REC FREQ L, C04:REC FREQ R (EVR on RF ADJUST menu) VC600,VC601
INPUT	100% Colour bar
MODE	PLAY, REC / PLAY
TAPE	NTSC: VFM3580KM, PAL: VFM3680KM Blank Tape
M.EQ	Spectrum Analyzer / Monitor TV (Connect to VIDEO 3 OUT)

1. Connect the trigger of spectrum Analyzer at TP2 and connect the Spectrum Analyzer in at TP17 with 50ohm coaxial cable (Use GND at TG7).
2. Set the Error Rate display mode.
3. Open the RF ADJUST menu on Service menu and set as follows.

C20	ERROR MODE	FAST
C19	PB MODE	PB H
C18	VITERBI MODE	ON
C17	CONCEAL MODE	OFF
C16	ECC MODE	AL OFF

4. Playback the Alignment tape and Store the wave-form on the spectrum Analyzer in TRACE-A.
5. Eject the Alignment tape and insert a Blank tape and record a colour bar 100% signal.

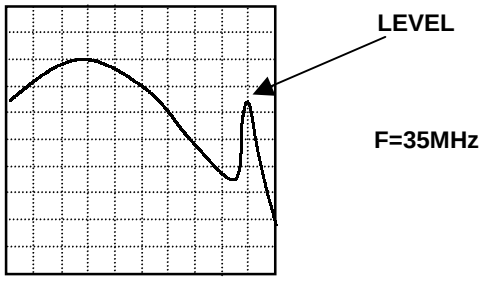

6. Set the TRACE-B mode on Spectrum Analyzer and Adjust VC600 and VC601 so that the peak level of 35MHz portion is minimum.
7. Adjust “C01:REC CUR L” and “C03:REC CUR R” so that the level of 5MHz portion is become –4dB±0.5dB per the waveform of TRACE-A.
8. Adjust “C02:REC FREQ L” and “C04:REC FREQ R” so that the level at 20MHz portion is become maximum.

POINT: Set the confidence playback level is lower less than level of TRACE-A and increase the gain gradually by Search Dial so that the level is maximum.
Please set the adjustment value in the first place the level is become maximum.

9. Confirm that the error rate is less than –12dB digit on the level meter.(Refer to item 5-3-22)
10. If the level of TRACE-B is not same as TRACE-A, confirm that the level of TRACE-B is within 0 to –2dB against TRASE-A (spec: 0 to –2dB).
11. Record for one minute keeping the above condition. Then playback the just recorded potion and confirm the error rate is same or better than DVCPRO play-back (Refer to item 5-3-22 : equivalent level of DVCPRO Alignment tape playback).

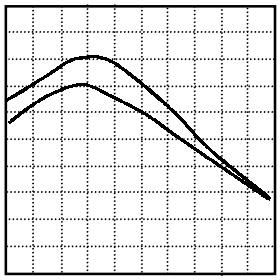

■ ITEM PARAMETER

REF. LEVEL	-25dB
ATT	10dB
DIV	5dB/DIV
START FREQUENCY	0KHz
STOP FREQUENCY	40MHz
RES VW	1MHz
VBW	3KHz
SWEEP	300msec
TRIGGER	EXT (HEAD SW)

5-4-2. Rotary Erase Current Adjustment

BOARD	RF AMP (H4)
SPEC.	1.0 ± 0.12V
TEST	TP11, TP12
ADJUST	VR13, VR14
INPUT	100% Colour Bar
MODE	REC / PLAY
TAPE	Blank Tape
M.EQ	Oscilloscope

1. Insert a REC/PLAY tape auto record a 100% colour bar signal.
2. Connect a scope to TP11 with 10:1 probe and adjust VR 13 (RE A) so that the DC level is in the specification (1.0V ± 0.12V).
3. Then connect the scope to TP12 and adjust VR14 (RE B) so that the DC level is in the specification (1.0V ± 0.12V).

6. REC PB

6-1. PLL Lock DC Level Adjustment

P.C.B.	REC PB (F5)
SPEC.	0.0V ± 0.2V
TEST	TP170
ADJ.	VC170
INPUT	----------
MODE	EE
TAPE	----------
M.EQ	Oscilloscope, Monitor TV

1. Adjust VC170 so that the DC level is in specification.

Note:
Confirm that the colour bar picture has no noise by watching the monitor TV.

6-2. Audio VCO Center Freq. Adjustment

P.C.B.	REC PB (F5)
SPEC.	48kHz Mode : 48.00kHz ± 0.1kHz 44kHz Mode : 44.10kHz ± 0.1kHz 32kHz Mode : 32.00kHz ± 0.1kHz
TEST	TP460
ADJ.	VR460 (48kHz), VR461 (44kHz), VR462 (32kHz)
INPUT	----------
MODE	EE
TAPE	----------
M.EQ	Oscilloscope, Frequency Counter, Monitor TV

1. Open the “E00:AUDIO ADJUST” menu on the Service Menu.
2. Select the item “E06:A VCO ADJ” and it setting follow the adjustment frequency as indicated as below procedure..

E06	: A VCO ADJ	48kHz
E06	: A VCO ADJ	44kHz
E06	: A VCO ADJ	32kHz

3. Set the item “ E06:A VCO ADJ” to 48kHz and adjust VR460 so that the frequency is 48.00kHz ± 0.1kHz.
4. Set the item “ E06:A VCO ADJ” to 44kHz and adjust VR461 so that the frequency is 44.10kHz ± 0.1kHz.
5. Set the item “ E06:A VCO ADJ” to 32kHz and adjust VR462 so that the frequency is 32.00kHz ± 0.1kHz.
6. Finally, close the Service Menu.

7. Video Out P. C. Board (F4) [FOR NTSC ONLY]

Please warm up the VTR about 10 minute before adjustment.

CONNECTION

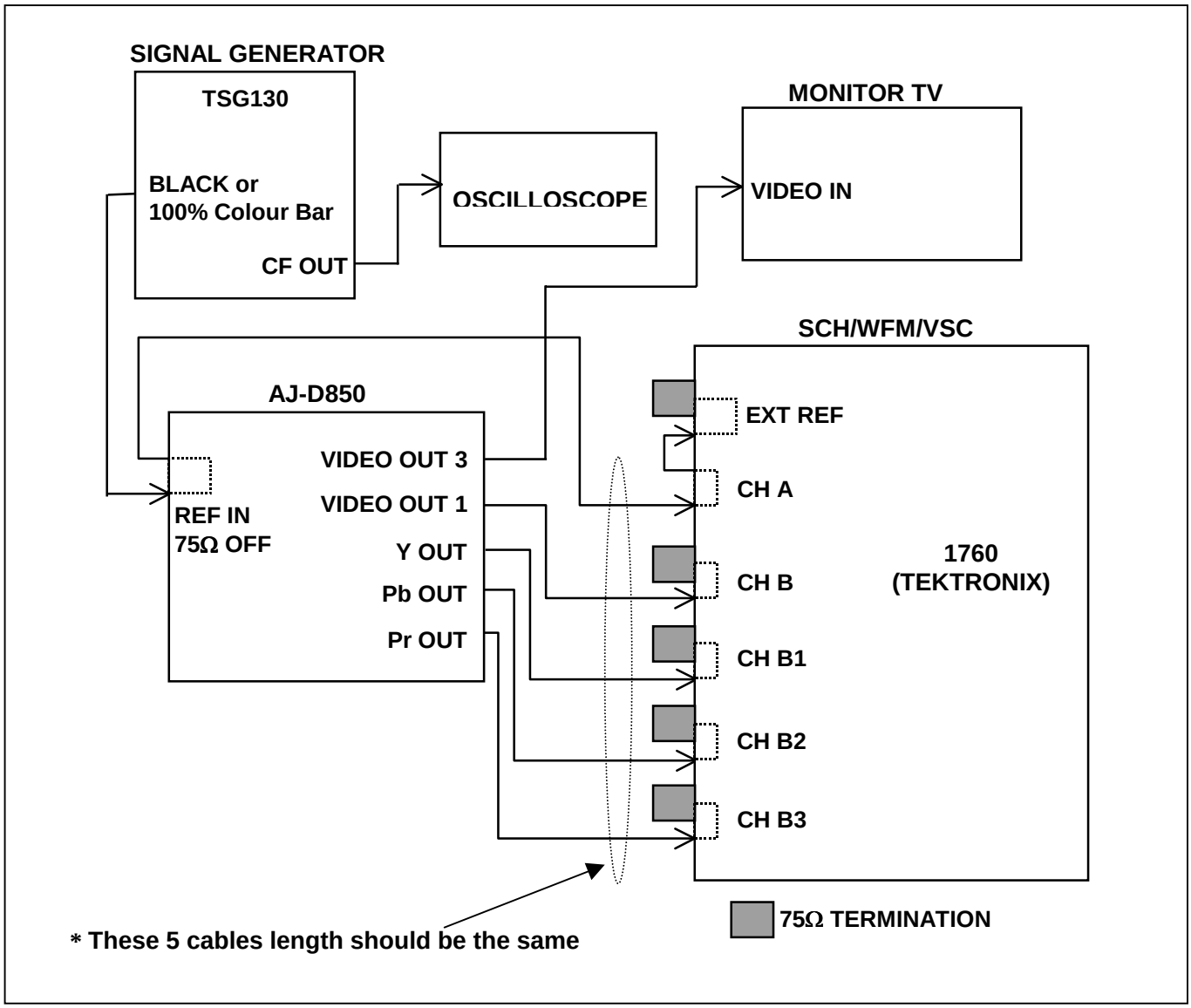

7-1. REF PLL Center Adjustment

P.C.B.	V_OUT (F4)
SPEC.	0V ± 0.1VDC
TEST	TP70 (D-1)
ADJ.	VC70 (D-1)
INPUT	EXT REF IN: Composite 75% Color Bar
MODE	EE
TAPE	----------
M.EQ	Oscilloscope

1. Adjust VC70 so that the voltage is 0V ± 0.1VDC.

7-2. REF CF Detection Adjustment

P.C.B.	V_OUT (F4)
SPEC.	See Figure, A = B ± 5%
TEST	TP105 (E-4), CF Out of Signal SG TP100 (E-1), TP101 (E-1)
ADJ.	VR100 (C-1)
INPUT	EXT REF IN: Composite 75% Color Bar
MODE	EE
TAPE	----------
M.EQ	Oscilloscope

1. Connect the oscilloscope CH1 to the CF output of composite signal generator and CH2 to TP105.
2. Adjust VR100 so that the phase is synchronized between CF pulses and TP105 as shown in figure.

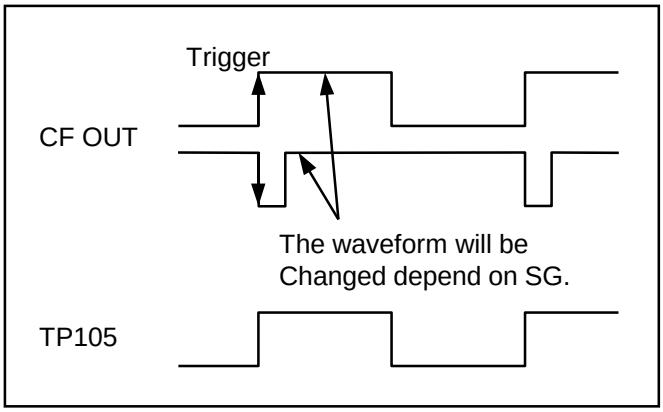

3. Connect the oscilloscope CH1 to TP101 and CH2 to TP100.
4. Expand (delay) the rising edge of TP100.
5. Slowly and slightly rotate VR100 so that the rising edge of TP101 is positioned at the center of cross point between A and B of waveform at TP100.

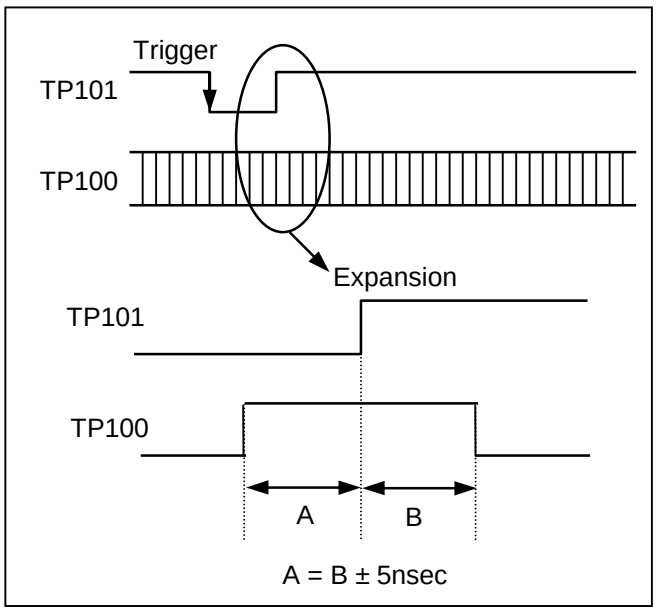

7-3. Ref. H Phase Adjustment

P.C.B.	V_OUT (F4)
SPEC.	T = 5.3 ± 0.1us
TEST	TP102 (E-1), TP651 (F-2)
ADJ.	VR101 (C-1)
INPUT	EXT REF IN: Composite 75% Color Bar
MODE	EE
TAPE	----------
M.EQ	Oscilloscope

1. Connect the oscilloscope CH1 to TP102 and CH2 to TP651.
2. Adjust VR101 so that the timing of the pulses at TP651 and TP102 is as shown in below.

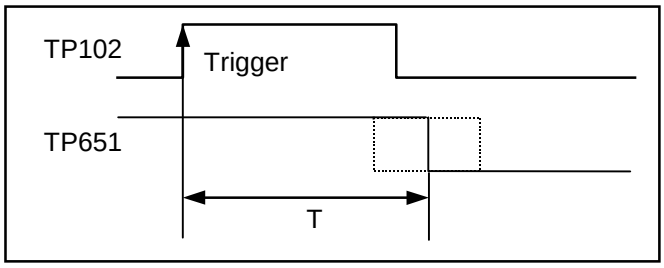

7-4. Composite Set-up Adjustment

P.C.B.	V_OUT (F4)
SPEC.	Set-up Level = Pedestal Level ± 1RE
TEST	VIDEO OUT 1
ADJ.	VR902 (G-1)
INPUT	----------
MODE	PLAY
TAPE	VFM3580KM (75% Color Bar portion)
M.EQ	Waveform Monitor

1. Open the VIDEO ADJUST menu on Service Menu and set item “D08: V SETUP” to ON.
2. Set the item “613:V IN SETUP” and “614:V OUT SETUP” to “THRU” on SET UP menu.
3. Adjust VR902 so that the set-up level is the same level as the pedestal level.

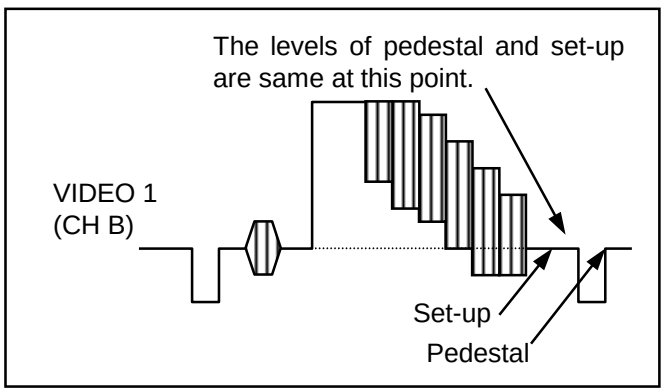

7-5. Sync Level Adjustment

P.C.B.	V_OUT (F4)
SPEC.	40IRE ± 1%
TEST	VIDEO OUT 1
ADJ.	VR950 (F-1)
INPUT	----------
MODE	PLAY
TAPE	VFM3580KM (75% Color Bar portion)
M.EQ	Waveform Monitor

1. Adjust VR950 so that the Sync Level is 40IRE ± 1%.

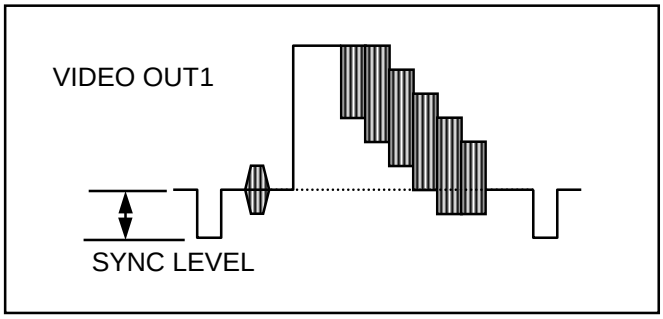

7-6. Carrier Balance Adjustment

P.C.B.	V_OUT (F4)
SPEC.	Cross point “A” at the center of scope.
TEST	REF IN (CH A), VIDEO OUT 1(CH B)
ADJ.	VR806 (H-1), VR807 (H-1)
INPUT	EXT REF IN
MODE	PLAY
TAPE	VFM3580KM (75% Color Bar portion)
M.EQ	Vector Scope

1. Adjust VR806 (PB BAL) and VR807 (PR BAL) so that the cross point “A” is positioned at the center of the vector scope.

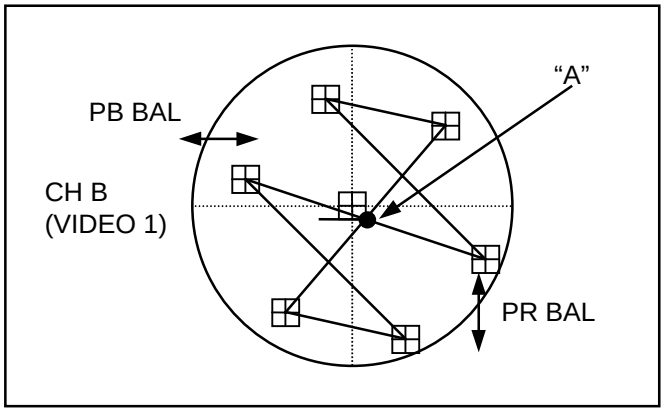

7-7. Composite Y Level Adjustment

P.C.B.	V_OUT (F4)
SPEC.	100IRE ± 1%
TEST	VIDEO OUT 1
ADJ.	VR900 (G-1)
INPUT	----------
MODE	PLAY
TAPE	VFM3580KM (75% Color Bar portion)
M.EQ	Waveform Monitor

1. Adjust VR900 so that the Y level is 100IRE ± 1%.

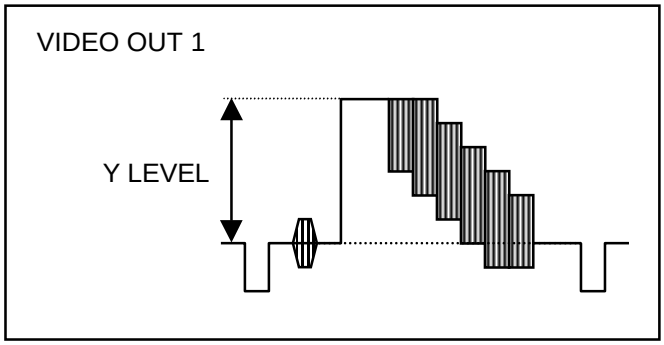

7-8. Composite Y Frequency Response Adjustment

P.C.B.	V_OUT (F4)
SPEC.	5.5MHz = Less than –0.5dB
TEST	Y OUT
ADJ.	VR901 (G-1)
INPUT	----------
MODE	PLAY
TAPE	VFM3580KM (H-Sweep portion)
M.EQ	Waveform Monitor

1. Adjust VR901 so that the frequency response becomes flat.
   a) The level of 5.5MHz portion is less than –0.5dB.
   b) The middle frequency is flat.

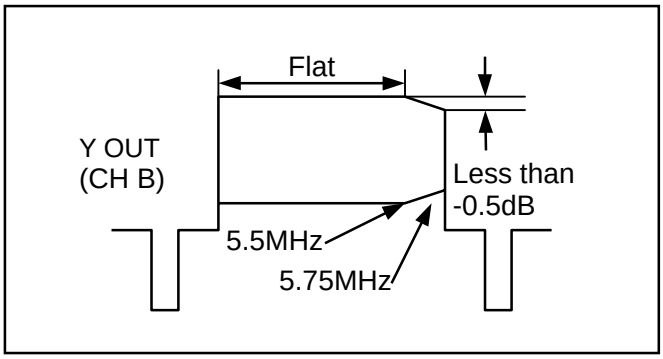

7-9. Vector Adjustment

P.C.B.	V_OUT (F4)
SPEC.	All vectors are in the Inner Boxes
TEST	VIDEO OUT 1
ADJ.	VR801 (H-1), VR802 (I-1) VR803 (H-1), VR804 (I-1)
INPUT	----------
MODE	PLAY
TAPE	VFM3580KM (75% Color Bar portion)
M.EQ	Vector Scope

1. Set the burst position on the Vector Scope at correct position.
2. Adjust the following VR's so that the color bar's each vector points are in the square mark on the vector scope.
   - VR804 : Quad Phase
   - VR801 : Hue Phase
   - VR803 : Encode PB Level
   - VR802 : Encode PR Level

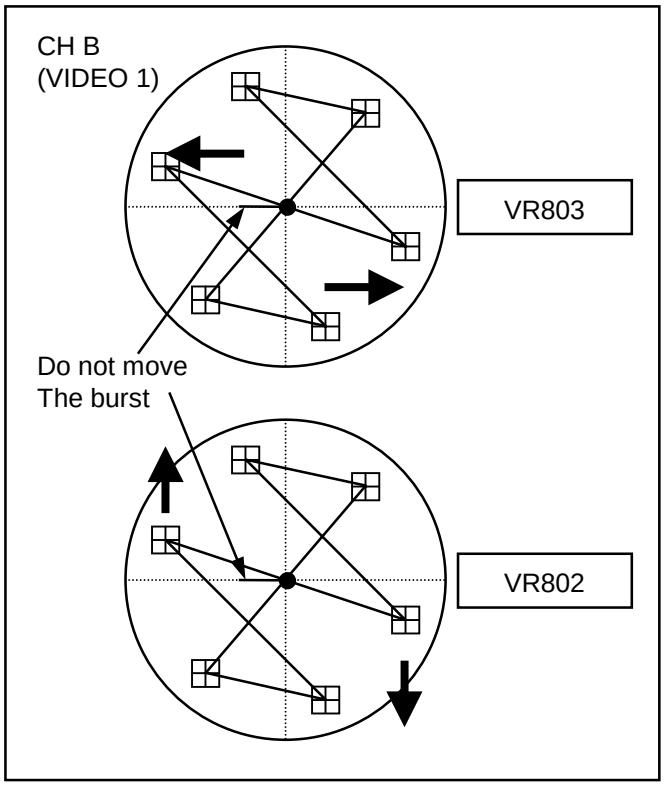

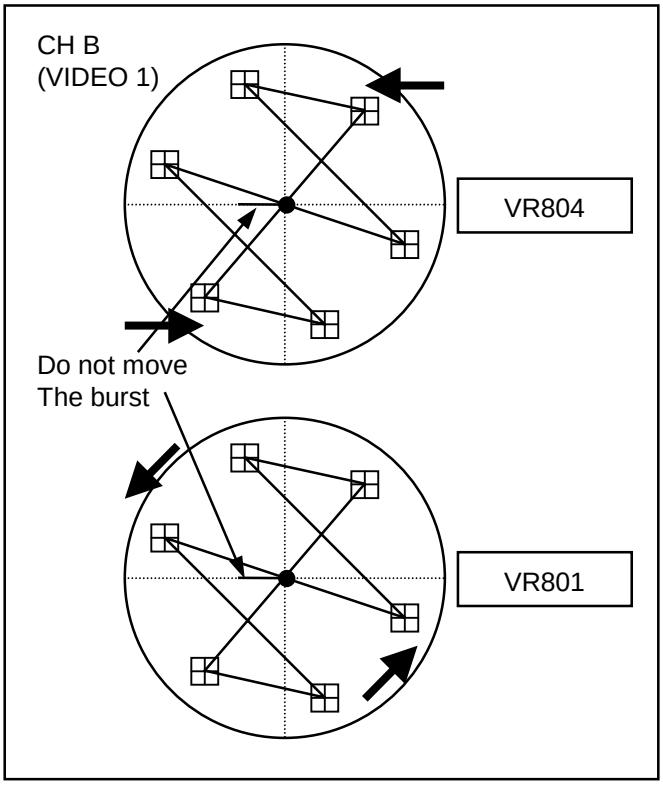

7-10. Composite Pb/Pr Timing Adjustment

P.C.B.	V_OUT (F4)
SPEC.	0 ± 10nsec
TEST	VIDEO OUT 1
ADJ.	VR703 (H-3)
INPUT	----------
MODE	PLAY
TAPE	VFM3580KM (Bowtie portion)
M.EQ	Vector Scope

1. Adjust VR703 so that the signal on the vector scope becomes 1 straight lines (X) as shown in figure.

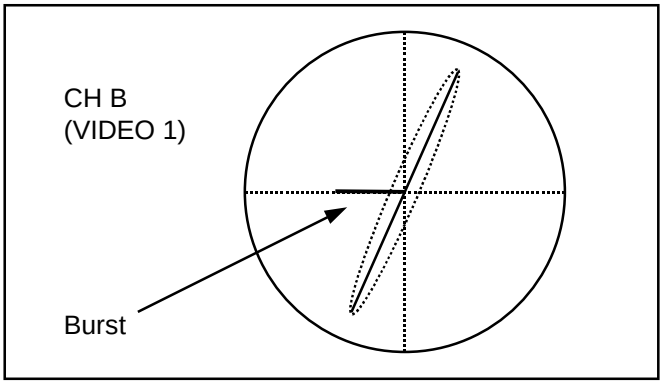

7-11. Composite Y/C Timing Adjustment

P.C.B.	V_OUT (F4)
SPEC.	0 ± 10nsec (C = less than 1%)
TEST	VIDEO OUT 1
ADJ.	VR903 (G-1)
INPUT	----------
MODE	PLAY
TAPE	VFM3580KM (Pulse Bar portion)
M.EQ	Waveform Monitor

1. Adjust VR903 so that the portion A and B are become symmetric left and right and level of portion C less than 1% against level of waveform 100% as shown in figure.
2. When performing this adjustment, the level of waveform may be changed. Therefore, level of waveform is adjusted by Chroma VR on the front panel during this adjustment.
3. After finish this adjustment set the Chroma VR to preset position.
4. After completion of this adjustment, “6-12. Sub-Carrier Phase Adjustment” should be performed.

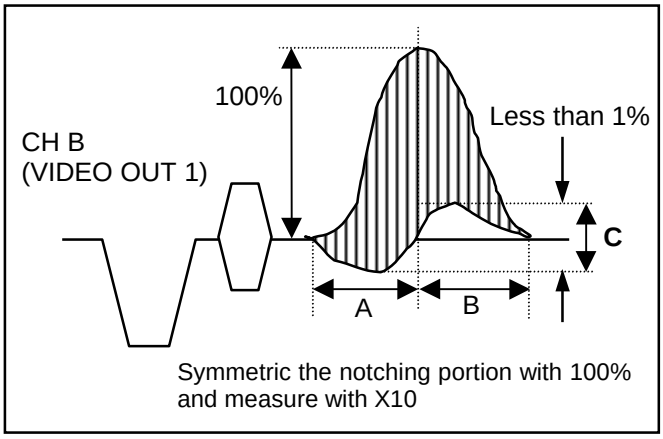

7-12. Sub-Carrier Phase Adjustment

P.C.B.	V_OUT (F4)
SPEC.	0 ± 1degree
TEST	VIDEO OUT 1, REF IN
ADJ.	VR160 (C-1)
INPUT	REF IN: Composite 75% Color Bar
MODE	PLAY
TAPE	VFM3580KM (75% Color Bar portion)
M.EQ	SCH Meter

1. Adjust VR160 so that the SCH of VIDEO OUT is same as EXT-REF-IN, then SCH phase should be become 0 ± 1 degree.

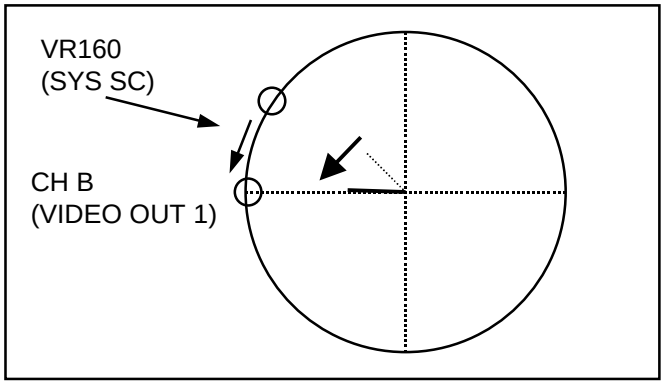

7-13. Burst Adjustment

P.C.B.	V_OUT (F4)
SPEC.	PHASE: 0 ± 1degree LEVEL: 40 ± 0.4IRE
TEST	VIDEO OUT 1
ADJ.	VR280 (C-1), VR805 (I-1)
INPUT	REF IN: Composite 75% Color Bar
MODE	PLAY
TAPE	VFM3580KM (75% Color Bar portion)
M.EQ	SCH Meter

1. Adjust VR280 while changing the channels A and B of the SCH meter alternately so that the SCH is 0 degree.
2. Adjust VR805 while changing the channels A and B of the SCH meter alternately so that the burst level and burst phase are become same between VIDEO 1 OUT(CHB) and REF(CHA),then burst level is should be become 40 ± 0.4IRE.

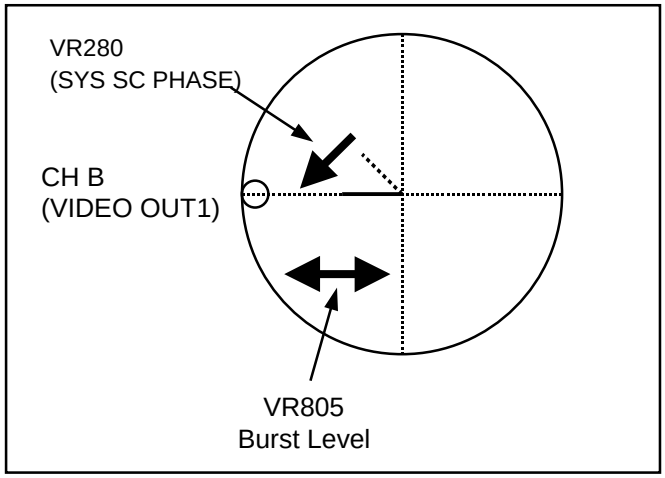

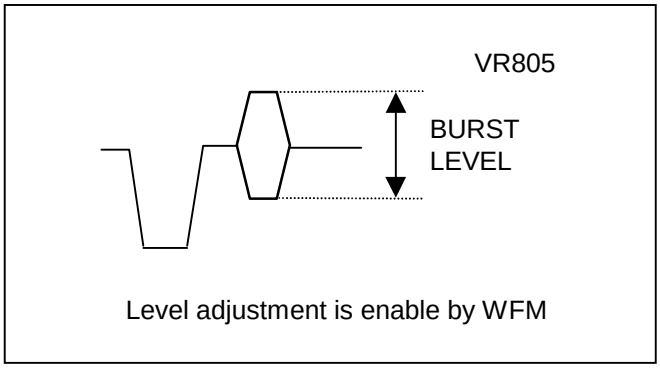

7-14. Burst Position Adjustment

P.C.B.	V_OUT (F4)
SPEC.	A = B ± 5%
TEST	VIDEO OUT 1, REF IN
ADJ.	VR201 (A-1)
INPUT	REF IN: Composite 75% Color Bar
MODE	PLAY
TAPE	VFM3580KM (75% Color Bar portion)
M.EQ	Waveform Monitor

1. Adjust VR201 while changing the channels A and B of the vector scope alternately so that the center of the burst of the reference and VIDEO OUT 1 are phase synchronized and level difference between A and B portion in specification.

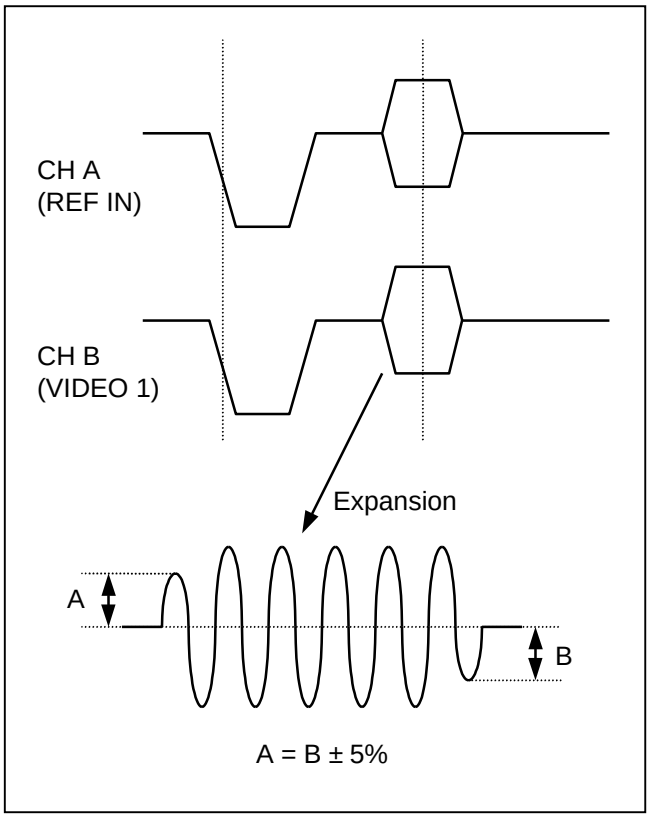

7-15. Confirmation of Vector

P.C.B.	V_OUT (F4)
SPEC.	All vectors are in the Inner Boxes
TEST	VIDEO OUT 1
ADJ.	VR801 (H-1), VR803 (H-1) VR802 (I-1), VR800 (H-1)
INPUT	----------
MODE	PLAY
TAPE	VFM3580KM (75% Color Bar portion)
M.EQ	Vector Scope

1. Set the burst position on the Vector Scope at correct position.
2. Confirm that the color bar's each vector points are in the square mark on the vector scope.
3. If out of specification, adjust the following VR's so that the color bar's each vector points are in the square mark on the vector scope.(Refer to item 7-9. Vector Adjustment).
   - VR804 : Quad Phase
   - VR801 : Hue Phase
   - VR803 : Encode PB Level
   - VR802 : Encode PR Level

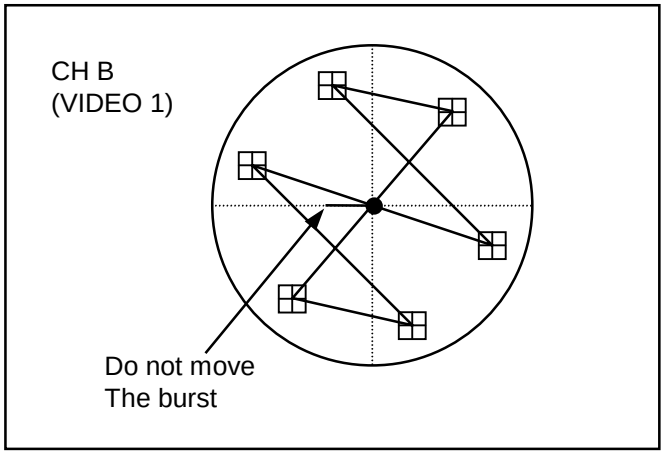

7-16. Component Ref. H & Sub-Carrier Phase Adjustment

P.C.B.	V_OUT (F4)
SPEC.	T = 5.3 ± 0.1usec 0 ± 10nsec
TEST	TP102, TP651 VIDEO OUT 1 , EXT REF IN
ADJ.	VR102 (C-1)
INPUT	REF IN : 75% Color Bar (without burst: Component Y)
MODE	EE
TAPE	VFM3580KM (75% Color Bar portion)
M.EQ	Oscilloscope, Waveform Monitor

1. Connect the oscilloscope CH1 to TP102 and CH2 to TP651.
2. Adjust VR102 so that the timing of the phase at TP102 and TP651 are as shown in below.

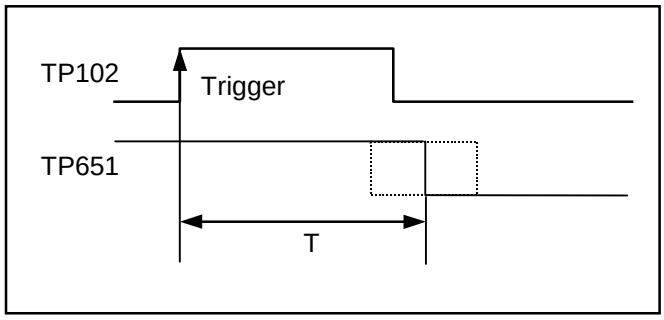

3. Playback the color bar portion of Alignment tape.
4. Adjust VR102 so that the phase synchronized within 0 ± 10 nsec between REF IN (CHA) and Video 1 Out (CHB) as shown in figure.

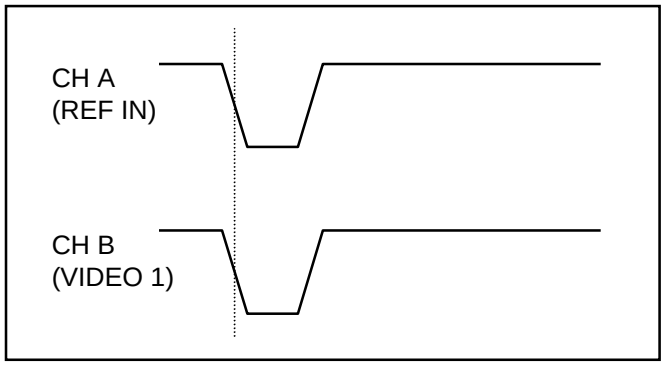

7-17. Component Y Level Adjustment

P.C.B.	V_OUT (F4)
SPEC.	V = 700mV ± 7mV
TEST	COMPONENT Y OUT
ADJ.	VR700 (I-1)
INPUT	----------
MODE	PLAY
TAPE	VFM3580KM (75% Color Bar portion)
M.EQ	Waveform Monitor

1. Set the SW950 to M II side on V OUT P.C.Board..
2. Adjust VR700 so that the V level is 700mV ± 7mV.

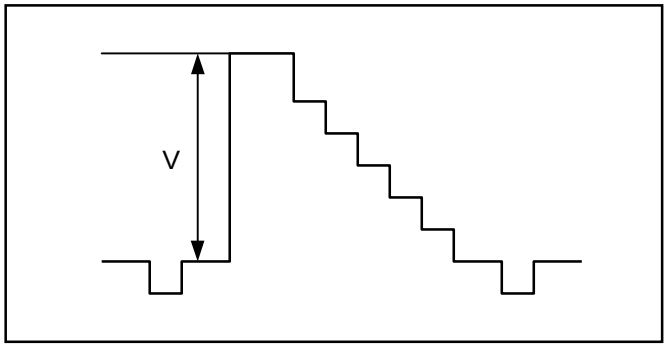

7-18. Video Phase Adjustment

P.C.B.	V_OUT (F4)
SPEC.	T = 1.26 ± 0.02usec
TEST	Y OUT
ADJ.	VR260 (A-1)
INPUT	----------
MODE	PLAY
TAPE	VFM3580KM (Area Marker portion)
M.EQ	Waveform Monitor

1. Open the Video Adjust menu on Service menu and set item "D01:VIDEO BLANK" to OFF position.
2. Adjust VR260 so that the timing T is within specification.
3. After finish this adjustment, set to ON position of item "D01:VIDEO BLANK".

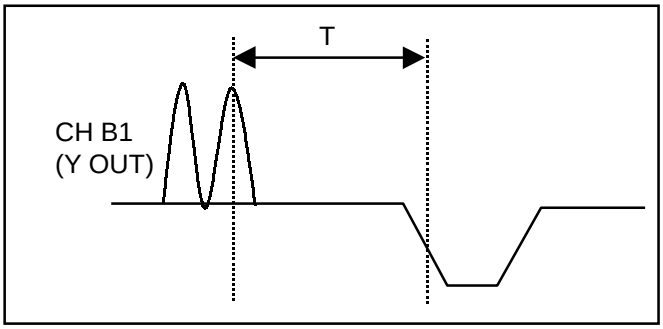

7-19. Component Y Frequency Response Adjustment

P.C.B.	V_OUT (F4)
SPEC.	5.5MHz = Less than –0.5dB
TEST	COMPONENT Y OUT
ADJ.	VR701 (I-2)
INPUT	----------
MODE	PLAY
TAPE	VFM3580KM (H Sweep portion)
M.EQ	Waveform Monitor

1. Adjust VR701 so that the frequency response becomes flat.

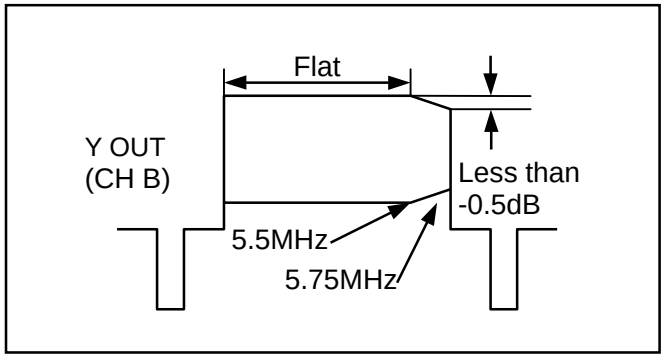

7-20. Component Pb Level Adjustment

P.C.B.	V_OUT (F4)
SPEC.	525mV ± 5mV
TEST	COMPONENT PB OUT
ADJ.	VR706 (J-1)
INPUT	----------
MODE	PLAY
TAPE	VFM3580KM (75% Color Bar portion)
M.EQ	Waveform Monitor

1. Set the SW950 to M II side on V OUT P.C.Board..
2. Adjust VR706 so that the Pb level of component out is within specification.

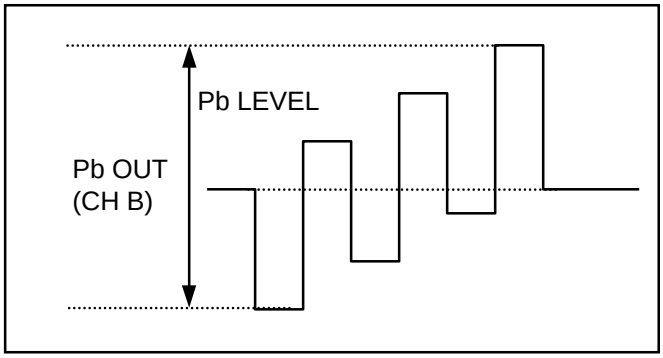

7-21. Component Pr Level Adjustment

P.C.B.	V_OUT (F4)
SPEC.	525mV ± 5mV
TEST	COMPONENT Pr OUT
ADJ.	VR704 (H-2)
INPUT	----------
MODE	PLAY
TAPE	VFM3580KM (75% Color Bar portion)
M.EQ	Waveform Monitor

1. Set the SW950 to M II side on V OUT P.C.Board..
2. Adjust VR704 so that the Pr level of component out is within specification.

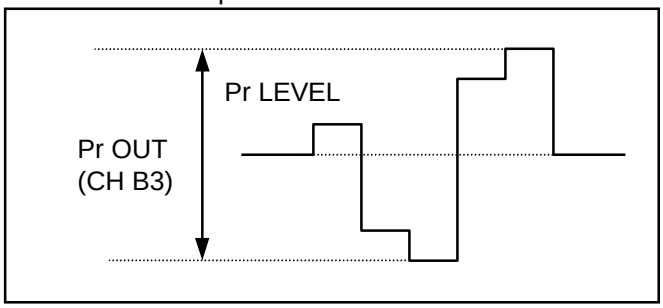

7-22. Component Y/Pb Timing Adjustment

P.C.B.	V_OUT (F4)
SPEC.	0 ± 10nsec
TEST	COMPONENT Y OUT, PB OUT
ADJ.	VR705 (J-2)
INPUT	----------
MODE	PLAY
TAPE	VFM3580KM (Bowtie portion)
M.EQ	Waveform Monitor

1. Set the waveform monitor in the YC timing measuring mode (CH B1 + CH B2).
2. Adjust VR705 so that the cross point of the envelope is at the center.

Note: Incase of WFM monitor does not have Y-Pb timing adjustment mode, if the oscilloscope have “ADD” and “INVERT” switch, please use those switch for make below waveform.

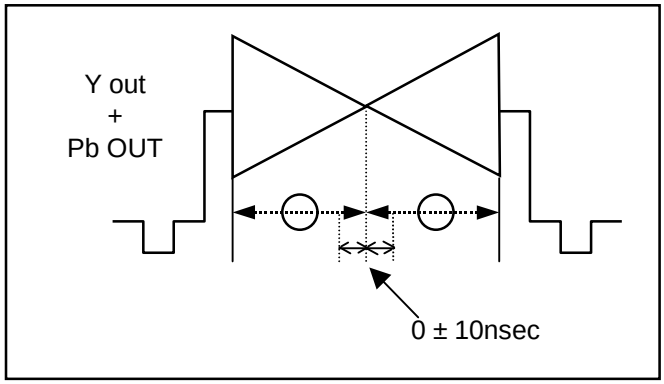

7-23. Component Y/Pr Timing Adjustment

P.C.B.	V_OUT (F4)
SPEC.	0 ± 10nsec
TEST	COMPONENT Y OUT, Pr OUT
ADJ.	VR702 (H-2)
INPUT	----------
MODE	PLAY
TAPE	VFM3580KM (Bowtie portion)
M.EQ	Waveform Monitor

1. Set the waveform monitor in the YC timing measuring mode (CH B1 + CH B2).
2. Adjust VR702 so that the cross point of the envelope is at the center.

Note: Incase of WFM monitor does not have Y-Pb timing adjustment mode, if the oscilloscope have “ADD” and “INVERT” switch, please use those switch for make below waveform.

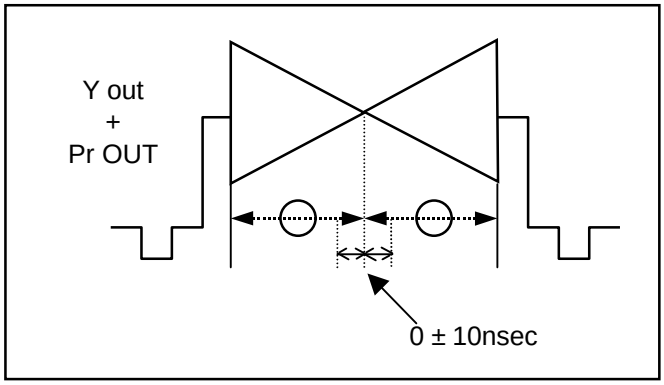

7-24. Composite Set up Adjustment (Set up ADD mode)

P.C.B.	V_OUT (F4)
SPEC.	Set up level = 7.5 ± 0.5IRE
TEST	VIDEO 1 OUT
ADJ.	VR905 (G-1)
INPUT	----------
MODE	PLAY
TAPE	VFM3580KM (75% Color Bar portion)
M.EQ	Waveform Monitor

1. Set the item “614: VOUT SET UP” to “ADD” on Set-up menu.
2. Adjust VR905 so that the Set-up level is 7.5 ± 0.5IRE.

NOTE: Signal have carrier leak and noise, therefore set Y-filter mode on WFM monitor.

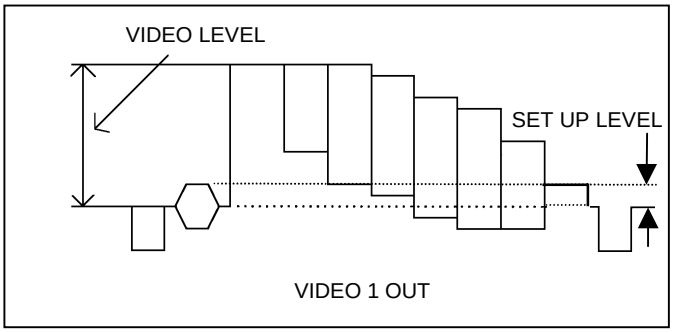

7-25. Composite Video Level Adj. (Set up ADD mode)

P.C.B.	V_OUT (F4)
SPEC.	Video level = 100 ± 1 IRE
TEST	VIDEO 1 OUT
ADJ.	VR904 (G-1)
INPUT	----------
MODE	PLAY
TAPE	VFM3580KM (75% Color Bar portion)
M.EQ	Waveform Monitor

1. Set the item “614: VOUT SET UP” to “ADD” on Set-up menu.
2. Adjust VR904 so that the Video level is 100 ± 1 IRE.

NOTE: Signal have carrier leak and noise, therefore set Y-filter mode on WFM monitor.

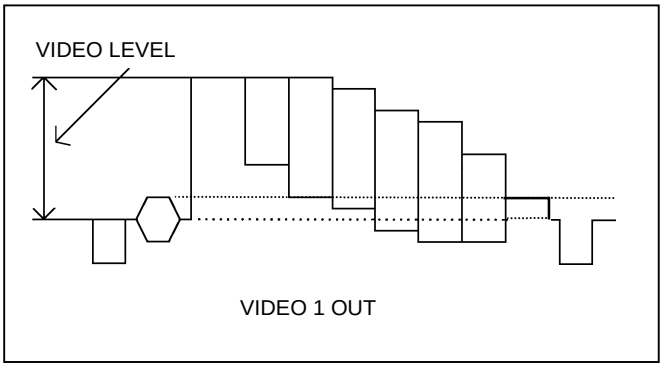

7-26. Vector Adjustment
(Set up ADD mode)

P.C.B.	V_OUT (F4)
SPEC.	All vectors are in the Inner Boxes
TEST	VIDEO 1 OUT
ADJ.	VR809 (I-1),VR810 (I-1)
INPUT	----------
MODE	PLAY
TAPE	VFM3580KM (75% Color Bar portion)
M.EQ	Vector Scope

1. Set the item “614: VOUT SET UP” to “ADD” on Set-up menu.
2. Adjust VR809(PR) and VR810(PB) so that the each vector points are in the square mark on the vector scope.

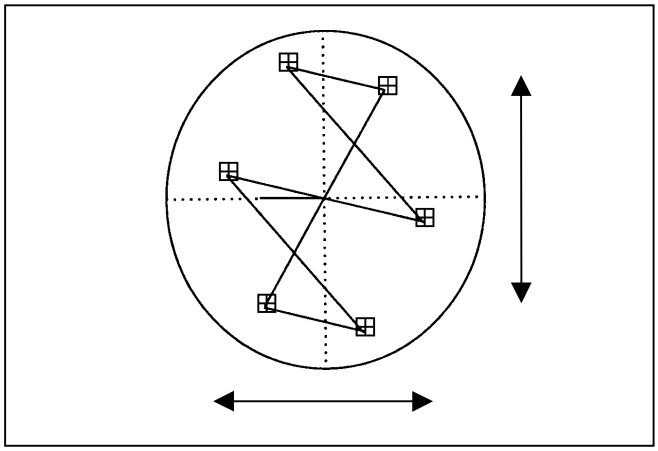

7. Video Out P. C. Board (F4) [FOR PAL ONLY]

Please warm up the VTR about 10 minute before adjustment.

CONNECTION

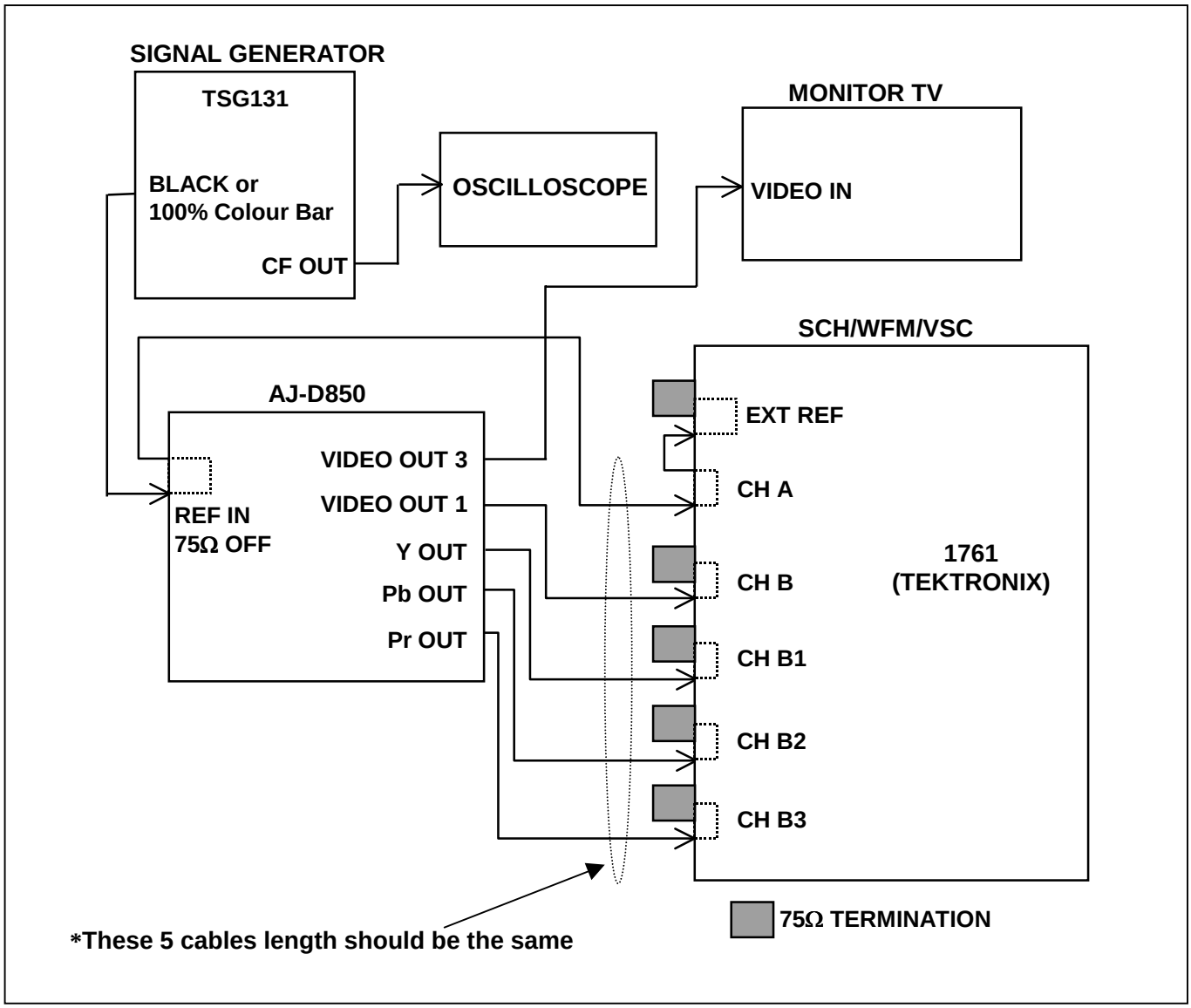

7-1. REF PLL Center Adjustment

P.C.B.	V_OUT (F4)
SPEC.	0V ± 0.1VDC
TEST	TP70 (D-1), TP102
ADJ.	VC70 (D-1)
INPUT	EXT REF IN: Composite 100% Colour Bar
MODE	EE
TAPE	----------
M.EQ	Oscilloscope

1. Adjust VC70 so that the voltage is 0V ± 0.1VDC.

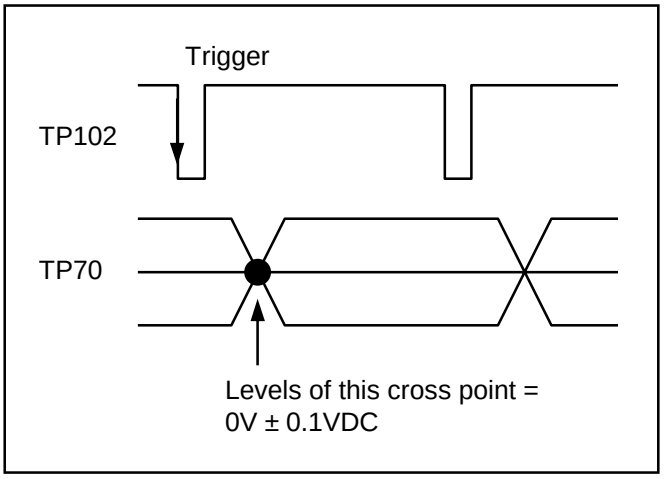

7-2. REF CF Detection Adjustment

P.C.B.	V_OUT (F4)
SPEC.	See Figure, A = B ± 5%
TEST	TP105 (E-4), CF Out of Signal SG TP100 (E-1), TP101 (E-1)
ADJ.	VC100 (C-1)
INPUT	EXT REF IN: Composite 100% Colour Bar
MODE	EE
TAPE	----------
M.EQ	Oscilloscope

1. Connect the oscilloscope CH1 to the CF output of composite signal generator and CH2 to TP105.
2. Adjust VR100 so that the phase is synchronized between CF pulses and TP105 as shown in figure.

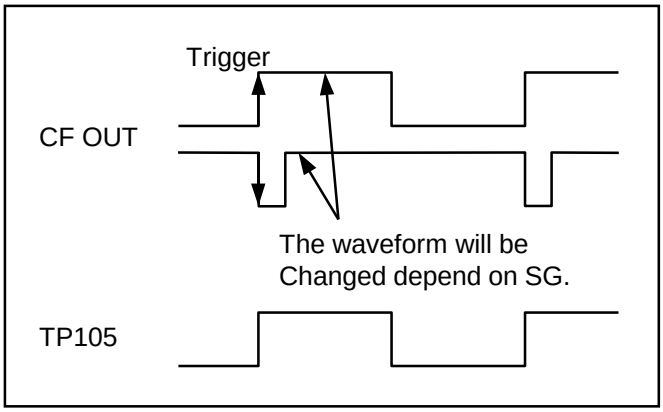

3. Connect the oscilloscope CH1 to TP101 and CH2 to TP100.
4. Expand (delay) the rising edge of TP100.
5. Slowly and slightly rotate VR100 so that the high period of TP100 is positioned at the center of the stable waveform at TP101.

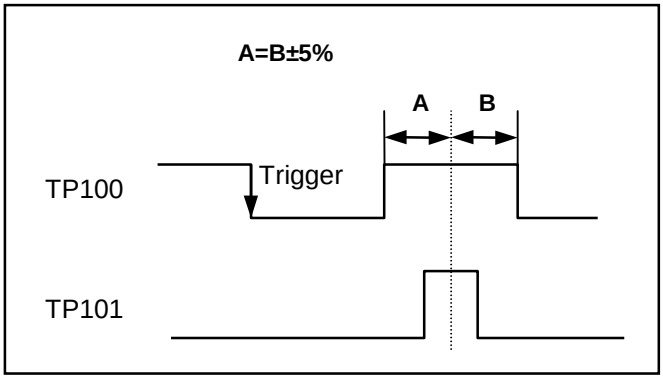

7-3. Ref. H Phase Adjustment

P.C.B.	V_OUT (F4)
SPEC.	T = 3.3 ± 0.1us
TEST	TP102 (E-1), TP651 (F-2)
ADJ.	VR101 (C-1)
INPUT	EXT REF IN: Composite 100% Colour Bar
MODE	EE
TAPE	----------
M.EQ	Oscilloscope

1. Connect the oscilloscope CH1 to TP102 and CH2 to TP651.
2. Adjust VR101 so that the timing of the pulses at TP651 and TP102 is as shown in below.

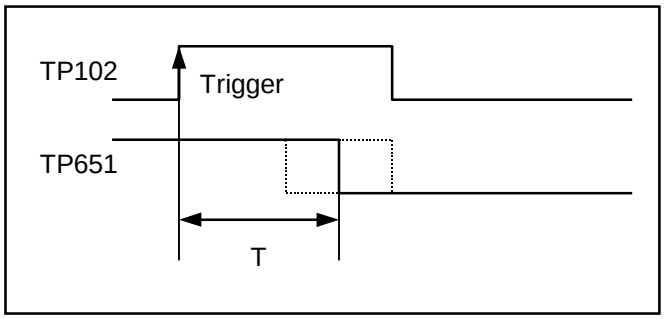

7-4. Composite Set-up Adjustment

P.C.B.	V_OUT (F4)
SPEC.	Set-up Level = Pedestal Level ± 5mV
TEST	VIDEO 1
ADJ.	VR902 (G-1)
INPUT	----------
MODE	PLAY
TAPE	VFM3680KM (100% Colour Bar portion)
M.EQ	Waveform Monitor

1. Adjust VR902 so that the set-up level is the same level as the pedestal level.

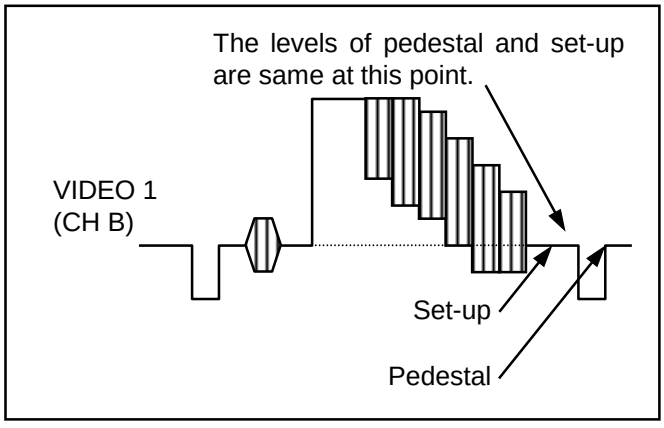

7-5. Sync Level Adjustment

P.C.B.	V_OUT (F4)
SPEC.	300mV ± 3mV
TEST	VIDEO OUT 1
ADJ.	VR950 (F-1)
INPUT	----------
MODE	PLAY
TAPE	VFM3680KM (100% Colour Bar portion)
M.EQ	Waveform Monitor

1. Adjust VR950 so that the Sync Level is 300mV ± 3mV.

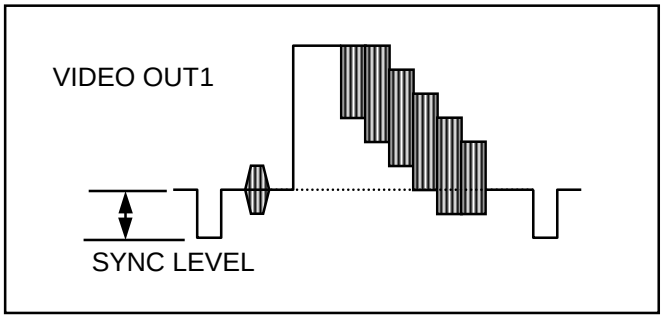

7-6. Carrier Balance Adjustment

P.C.B.	V_OUT (F4)
SPEC.	Cross point “A” at the center of scope.
TEST	REF IN (CH A), VIDEO OUT 1(CH B)
ADJ.	VR806 (H-1), VR807 (H-1)
INPUT	EXT REF IN
MODE	PLAY
TAPE	VFM3680KM (100% Colour Bar portion)
M.EQ	Vector Scope

1. Set the vector scope in the without set-up mode.
2. Adjust VR806 (PB BAL) and VR807 (PR BAL) so that the cross point “A” is positioned at the center of the vector scope.

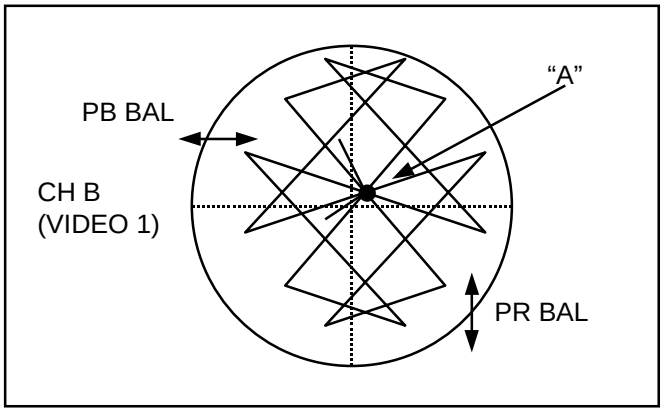

7-7. Composite Y Level Adjustment

P.C.B.	V_OUT (F4)
SPEC.	700mV ± 7mV
TEST	VIDEO 1
ADJ.	VR900 (G-1)
INPUT	----------
MODE	PLAY
TAPE	VFM3680KM (100% Colour Bar portion)
M.EQ	Waveform Monitor

1. Adjust VR900 so that the Y level is 700mV ± 7mV.

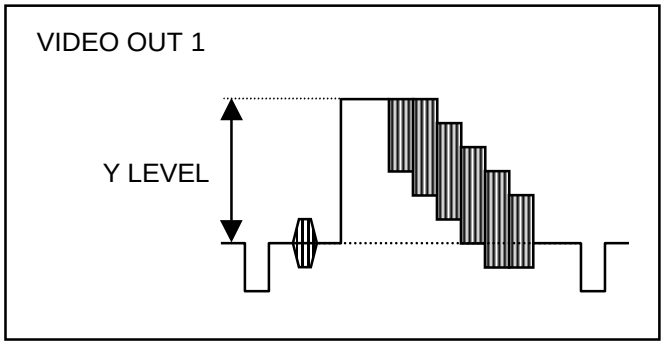

7-8. Composite Y Frequency Response Adjustment

P.C.B.	V_OUT (F4)
SPEC.	5.5MHz = Less than –0.5dB
TEST	Y OUT
ADJ.	VR901 (G-1)
INPUT	----------
MODE	PLAY
TAPE	VFM3680KM (H-Sweep portion)
M.EQ	Waveform Monitor

1. Adjust VR901 so that the frequency response becomes flat.
   a) The level of 5.5MHz portion is less than –0.5dB.
   b) The middle frequency is flat.

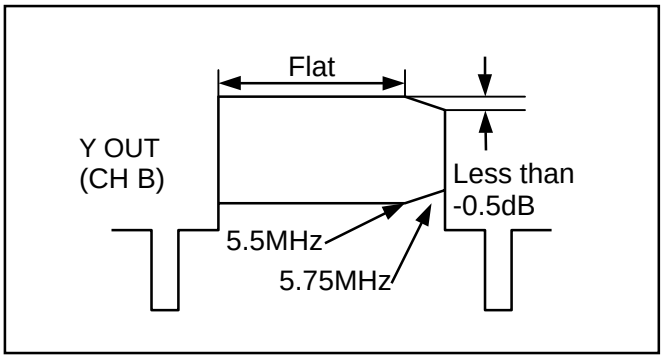

7-9. Vector Adjustment

P.C.B.	V_OUT (F4)
SPEC.	All vectors are in the Inner Boxes
TEST	VIDEO OUT 1
ADJ.	VR804 (I-1), VR801 (H-1), VR803 (H-1) VR802 (I-1), VR800 (H-1)
INPUT	----------
MODE	PLAY
TAPE	VFM3680KM (100% Colour Bar portion)
M.EQ	Vector Scope

1. Set the burst position on the Vector Scope at correct position.
2. Adjust the following VR's so that the colour bar's each vector points are in the square mark on the vector scope.
   - VR804 : Quad Phase
   - VR801 : Hue Phase
   - VR803 : Encode PB Level
   - VR802 : Encode PR Level
   - VR800 : PAL Phase

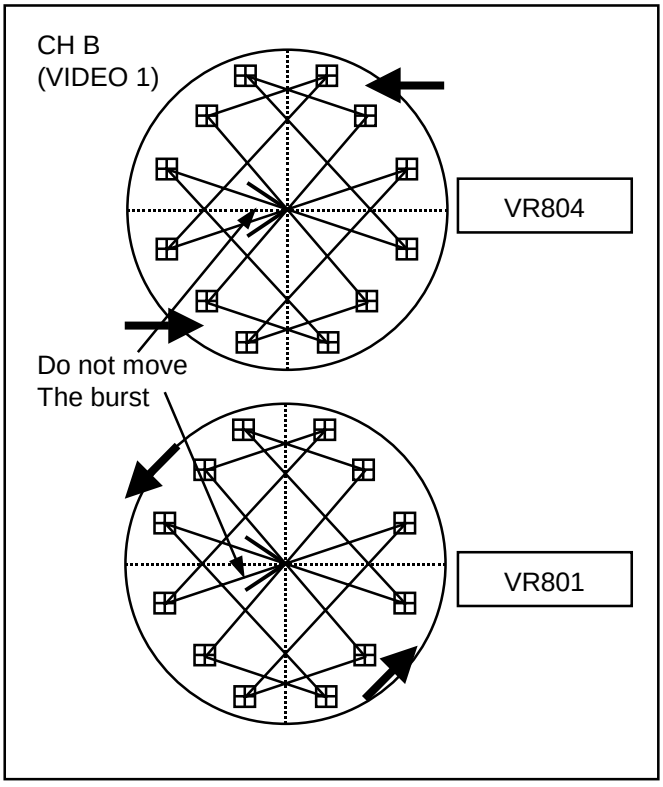

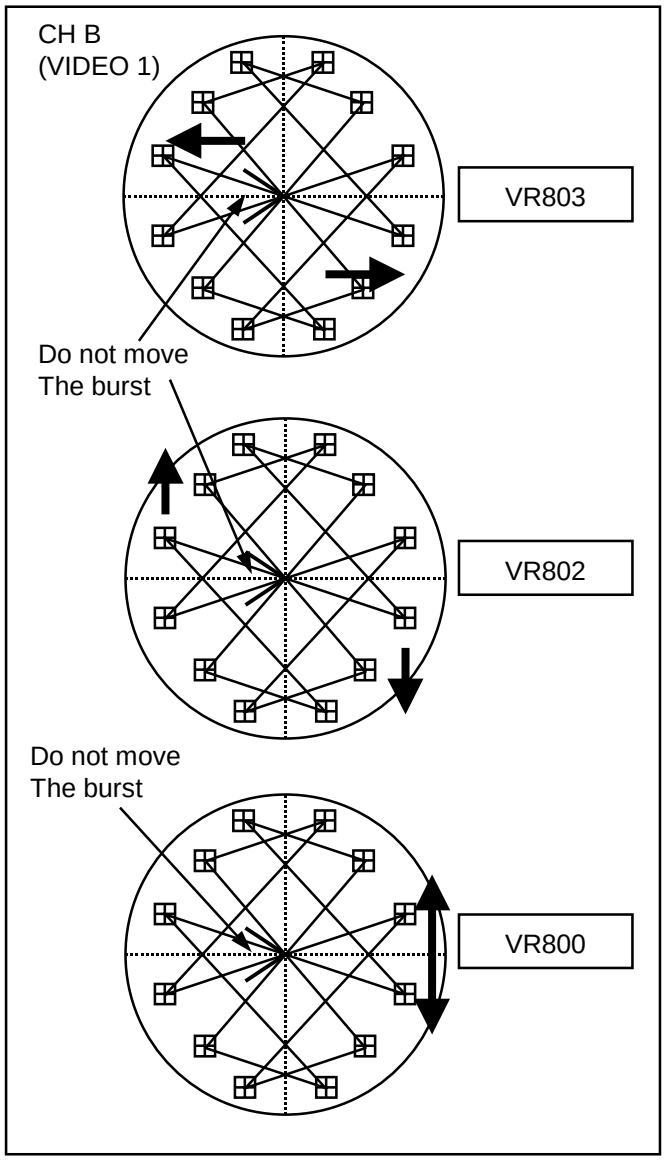

7-10. Composite Pb/Pr Timing Adjustment

P.C.B.	V_OUT (F4)
SPEC.	0 ± 10nsec
TEST	VIDEO OUT 1
ADJ.	VR703 (H-3)
INPUT	----------
MODE	PLAY
TAPE	VFM3680KM (Bowtie portion)
M.EQ	Vector Scope

1. Adjust VR703 so that the signal on the vector scope becomes 2 straight lines (X) as shown in figure.

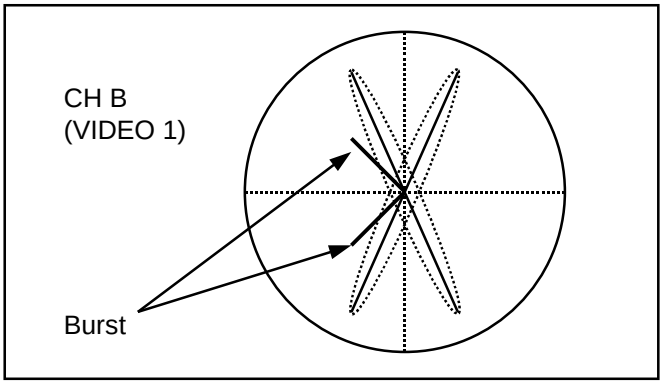

7-11. Composite Y/C Timing Adjustment

P.C.B.	V_OUT (F4)
SPEC.	0 ± 10nsec (C = less than 1%)
TEST	VIDEO OUT 1
ADJ.	VR903 (G-1)
INPUT	----------
MODE	PLAY
TAPE	VFM3680KM (Pulse Bar portion)
M.EQ	Waveform Monitor

1. Adjust VR903 so that the portion A and B are become symmetric left and right and level of portion C less than 1% against level of waveform 100% as shown in figure.
2. When performing this adjustment, the level of waveform may be changed. Therefore, level of waveform is adjusted by Chroma VR on the front panel during this adjustment.
3. After finish this adjustment set the Chroma VR to preset position.
4. After completion of this adjustment, “6-12. Sub-Carrier Phase Adjustment” should be performed.

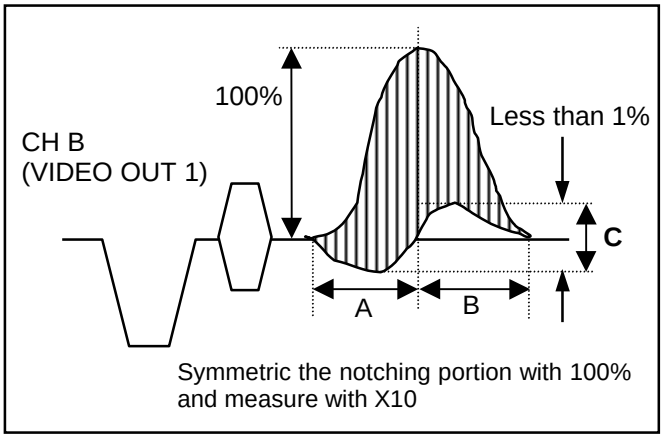

7-12. Sub-Carrier Phase Adjustment

P.C.B.	V_OUT (F4)
SPEC.	0 ± 1degree
TEST	VIDEO OUT 1, REF IN
ADJ.	VR160 (C-1)
INPUT	REF IN: Composite 100% Colour Bar
MODE	PLAY
TAPE	VFM3680KM (100% Colour Bar portion)
M.EQ	SCH Meter

1. Adjust VR160 so that the SCH of VIDEO OUT is same as EXT-REF-IN.

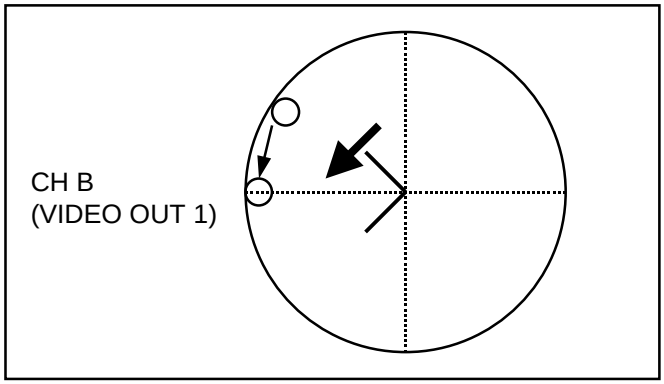

7-13. Burst Adjustment

P.C.B.	V_OUT (F4)
SPEC.	0 ± 1degree
TEST	VIDEO OUT 1
ADJ.	VR280 (C-1), VR805 (I-1), VR808 (I-1)
INPUT	REF IN: Composite 100% Colour Ba
MODE	PLAY
TAPE	VFM3680KM (100% Colour Bar portion)
M.EQ	SCH Meter

1. Adjust VR280 while changing the channels A and B of the SCH meter alternately so that the SCH is 0 degree.
2. Adjust VR805 and VR808 while changing the channels A and B of the SCH meter alternately so that the burst level and burst phase are become same between VIDEO 1 OUT(CHB) and REF(CHA).

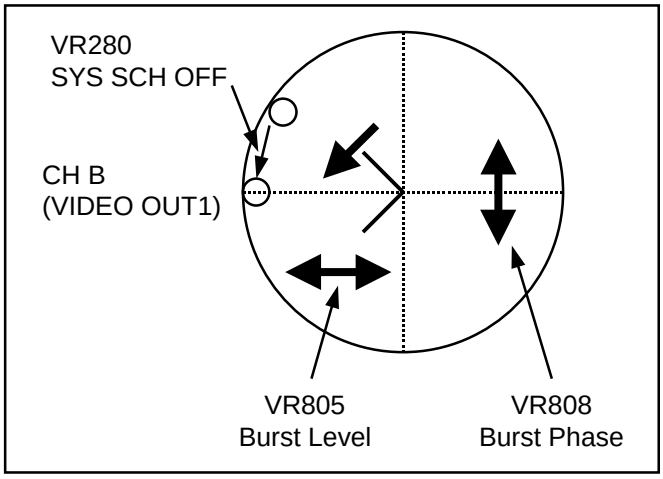

7-14. Burst Position Adjustment

P.C.B.	V_OUT (F4)
SPEC.	A = B ± 5%
TEST	VIDEO OUT 1, REF IN
ADJ.	VR201 (A-1)
INPUT	REF IN: Composite 100% Colour Bar
MODE	PLAY
TAPE	VFM3680KM (100% Colour Bar portion)
M.EQ	Waveform Monitor

1. Adjust VR201 while changing the channels A and B of the vector scope alternately so that the center of the burst of the reference and VIDEO OUT 1 are phase syncronized.

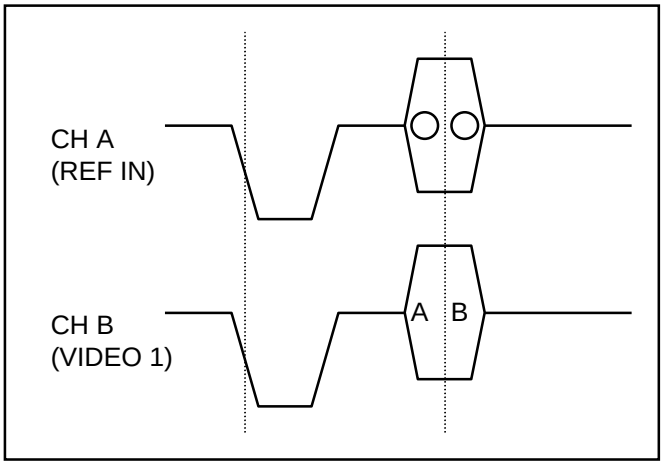

7-15. Confirmation of Vector

P.C.B.	V_OUT (F4)
SPEC.	All vectors are in the Inner Boxes
TEST	VIDEO OUT 1
ADJ.	VR804 (I-1), VR801 (H-1), VR803 (H-1) VR802 (I-1), VR800 (H-1)
INPUT	----------
MODE	PLAY
TAPE	VFM3680KM (100% Colour Bar portion)
M.EQ	Vector Scope

1. Set the burst position on the Vector Scope at correct position.
2. Confirm that the colour bar's each vector points are in the square mark on the vector scope.
3. If out of specification, adjust the following VR's so that the colour bar's each vector points are in the square mark on the vector scope.(Refer to item 6-9. Vector Adjustment).
   - VR804 : Quad Phase
   - VR801 : Hue Phase
   - VR803 : Encode PB Level
   - VR802 : Encode PR Level
   - VR800 : PAL Phase

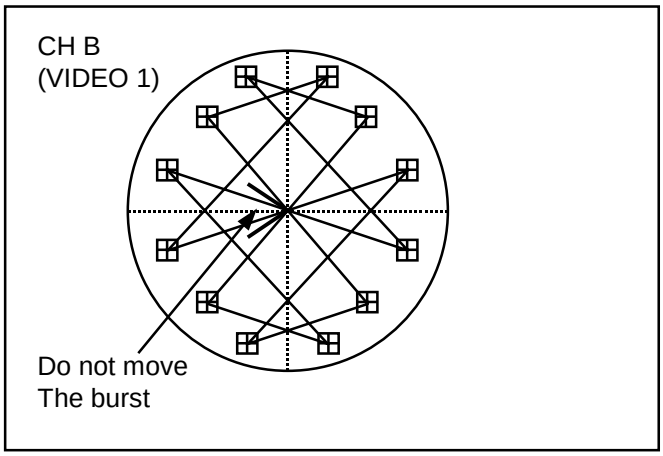

7-16. Component Ref. H & Sub-Carrier Phase Adjustment

P.C.B.	V_OUT (F4)
SPEC.	T = 3.3 ± 0.1usec 0 ± 10nsec
TEST	TP102, TP651 VIDEO OUT 1, EXT REF IN
ADJ.	VR102 (C-1)
INPUT	REF IN : 100% colour bar (without burst: Component Y)
MODE	EE
TAPE	----------
M.EQ	Oscilloscope, Waveform Monitor

1. Connect the oscilloscope CH1 to TP102 and CH2 to TP651.
2. Adjust VR102 so that the timing of the phase at TP102 and TP651 are as shown in below.

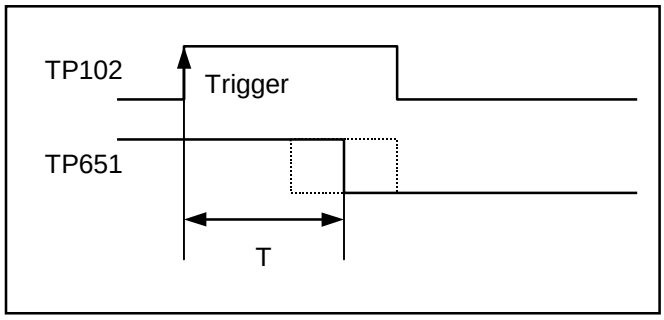

3. Set the waveform monitor in the EXT-REF mode.
4. Adjust VR102 so that the phase synchronized between REF IN (CHA) and Video 1 Out (CHB) as shown in figure.

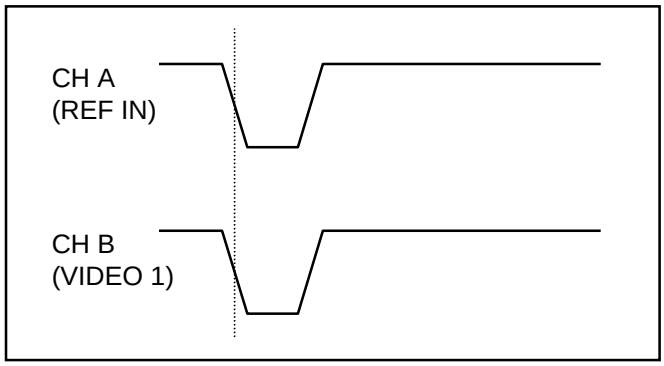

7-17. Component Y Level Adjustment

P.C.B.	V_OUT (F4)
SPEC.	V = 700mV ± 7mV
TEST	COMPONENT Y OUT
ADJ.	VR700 (I-1)
INPUT	----------
MODE	PLAY
TAPE	VFM3680KM (100% Colour Bar portion)
M.EQ	Waveform Monitor

1. Adjust VR700 so that the V level is 700mV ± 7mV.

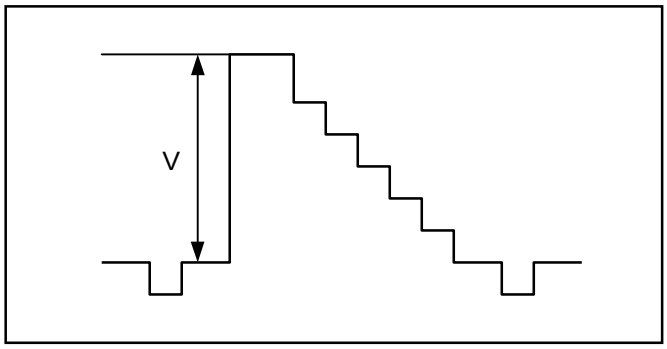

7-18. Video Phase Adjustment

P.C.B.	V_OUT (F4)
SPEC.	T = 0.96 ± 0.02usec
TEST	Y OUT
ADJ.	VR260 (A-1)
INPUT	----------
MODE	PLAY
TAPE	VFM3680KM (Area Marker portion)
M.EQ	Waveform Monitor

1. Open the Video Adjust menu on Service menu and set item “D01:VIDEO BLANK” to OFF position.
2. Adjust VR260 so that the timing T is within specification.
3. After finish this adjustment, set to ON position of item “D01:VIDEO BLANK”.

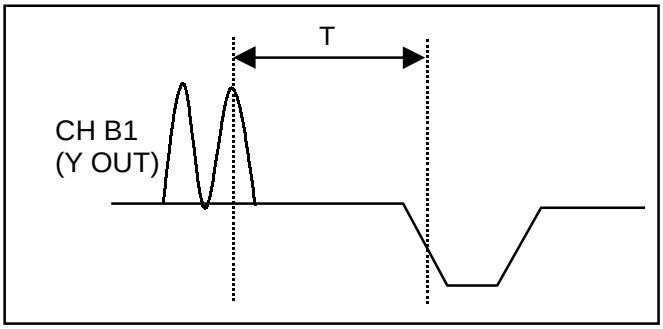

7-19. Component Y Frequency Response Adjustment

P.C.B.	V_OUT (F4)
SPEC.	5.5MHz = Less than –0.5dB
TEST	COMPONENT PB OUT
ADJ.	VR701 (I-2)
INPUT	----------
MODE	PLAY
TAPE	VFM3680KM (H Sweep portion)
M.EQ	Waveform Monitor

1. Adjust VR701 so that the frequency response becomes flat.

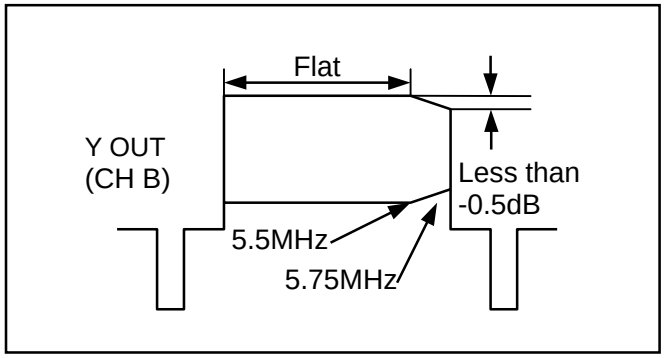

7-20. Component Pb Level Adjustment

P.C.B.	V_OUT (F4)
SPEC.	700mV ± 7mV
TEST	COMPONENT PB OUT
ADJ.	VR706 (J-1)
INPUT	----------
MODE	PLAY
TAPE	VFM3680KM (100% Colour Bar portion)
M.EQ	Waveform Monitor

1. Adjust VR706 so that the Pb level of component out is within specification.

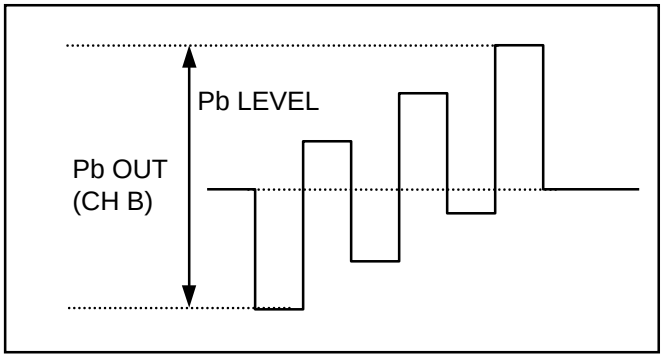

7-21. Component Pr Level Adjustment

P.C.B.	V_OUT (F4)
SPEC.	700mV ± 7mV
TEST	COMPONENT Pr OUT
ADJ.	VR704 (H-2)
INPUT	----------
MODE	PLAY
TAPE	VFM3680KM (100% Colour Bar portion)
M.EQ	Waveform Monitor

1. Adjust VR704 so that the Pr level of component out is within specification.

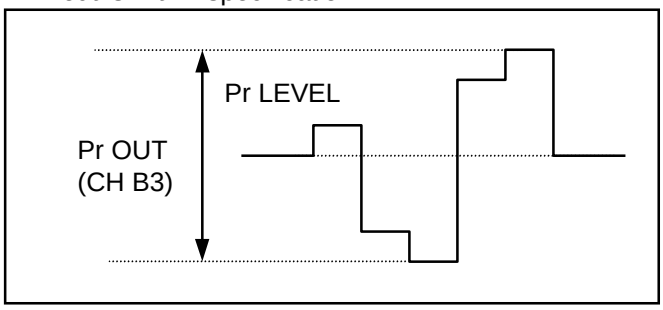

7-22. Component Y/Pb Timing Adjustment

P.C.B.	V_OUT (F4)
SPEC.	0 ± 10nsec
TEST	COMPONENT Y OUT, PB OUT
ADJ.	VR705 (J-2)
INPUT	----------
MODE	PLAY
TAPE	VFM3680KM (Bowtie portion)
M.EQ	Waveform Monitor

1. Set the waveform monitor in the YC timing measuring mode (CH B1 + CH B2).
2. Adjust VR705 so that the cross point of the envelope is at the center.

Note: Incase of WFM monitor does not have Y-Pb timing adjustment mode, if the oscilloscope have "ADD" and "INVERT" switch, please use those switch for make below waveform.

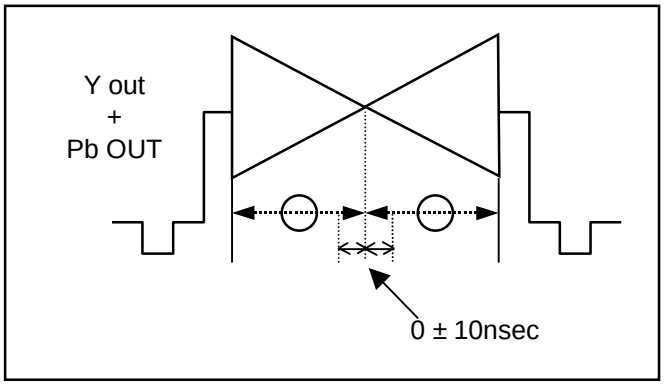

7-23. Component Y/Pr Timing Adjustment

P.C.B.	V_OUT (F4)
SPEC.	0 ± 10nsec
TEST	COMPONENT Y OUT, Pr OUT
ADJ.	VR702 (H-2)
INPUT	----------
MODE	PLAY
TAPE	VFM3680KM (Bowtie portion)
M.EQ	Waveform Monitor

1. Set the waveform monitor in the YC timing measuring mode (CH B1 + CH B2).
2. Adjust VR702 so that the cross point of the envelope is at the center.

Note: Incase of WFM monitor does not have Y-Pb timing adjustment mode, if the oscilloscope have "ADD" and "INVERT" switch, please use those switch for make below waveform.

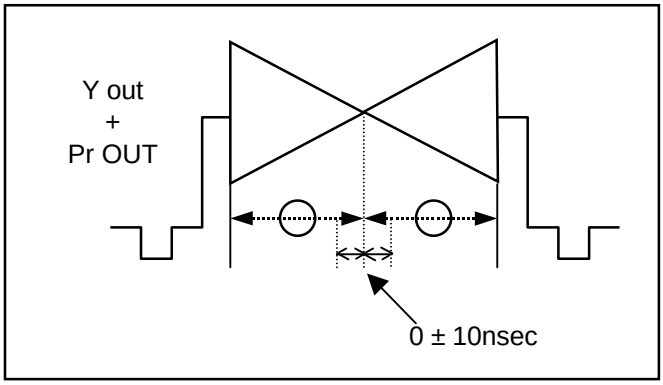

8. V IN P. C. Board [FOR NTSC ONLY]

8-1. Preparation for Video In Adjustment

1. Connect the equipment as shown in the figure.
2. V IN P.C.Board adjustment should be performed after the V OUT P.C.Board adjustment.
3. Set the menu and SW as follows.
   SET UP MENU 613: V IN SETUP → THOU
   614: V OUT SETUP → THOU
   600: PB PR IN LV → M II
   • SW950 → M II (V OUT P.C.Board.)

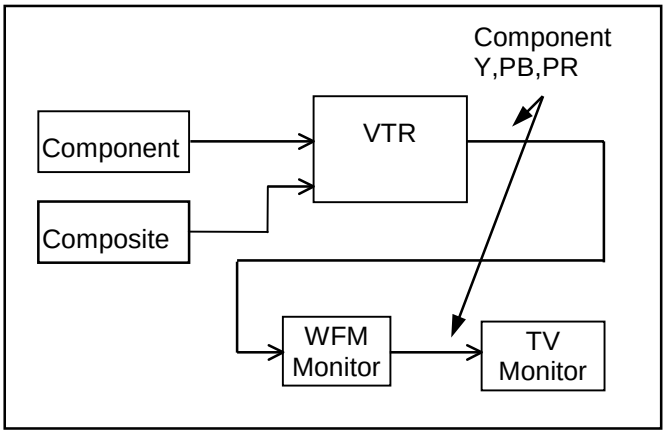

8-2. 13.5MHz VCO Adjustment

P.C.B.	V_IN (F6)
SPEC.	0V ± 0.1V
TEST	TP601
ADJ.	VL601, VR602
INPUT	Component 100% Color Bar
MODE	EE
TAPE	----------
M.EQ	Oscilloscope

1. Set VR602 below figure indicated position.
2. Adjust VL601 so that the DC Voltage is 0V ± 0.1V.

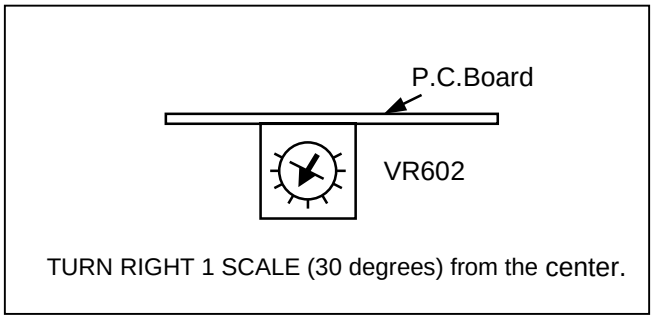

8-3. Component Y Timing Adjustment

P.C.B.	V_IN (F6)
SPEC.	Phase synchronized between REF IN and VIDEO OUT 1.
TEST	REF IN, VIDEO OUT 1
ADJ.	VR601
INPUT	Composite 100% Color Bar
MODE	EE
TAPE	----------
M.EQ	WFM Monitor

1. Connect the cables as indicated as below.

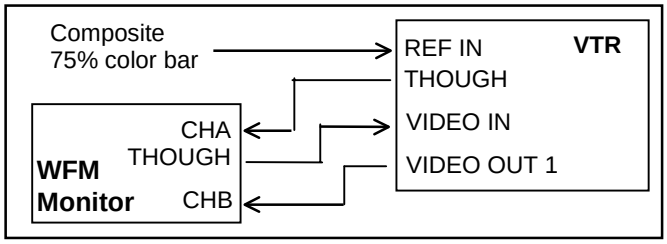

2. Expand the GREEN portion of color bar signal.
3. Adjust VR601 while change the CHA and CHB of WFM monitor so that the phase synchronized between CHA (REF IN) and CHB (VIDEO OUT).

NOTE: This adjustment should be performed after V OUT P.C.Board adjustment.

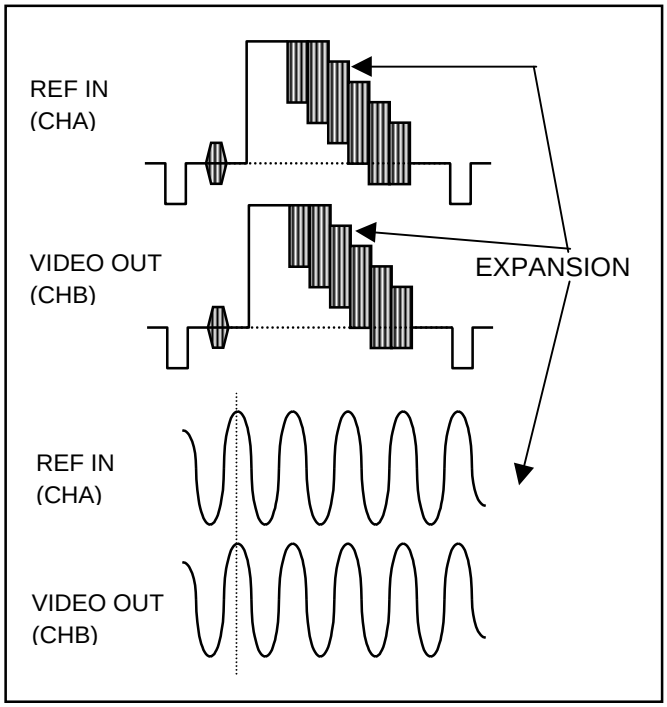

8-4. Component Y Level Adjustment

P.C.B.	V_IN (F6)
SPEC.	V1 = 0V ± 7mV, V2 = 700mV ± 7mV
TEST	Y OUT
ADJ.	VR702, VR701
INPUT	Component 100% Color Bar
MODE	EE
TAPE	----------
M.EQ	Waveform Monitor

1. Adjust VR702 so that the V1 is 0V ± 7mV.
2. Adjust VR701 so that the V2 is 700mV ± 7mV.

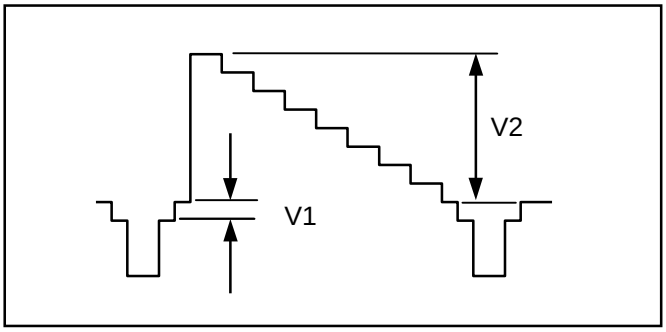

8-5. Component PB Level Adjustment

P.C.B.	V_IN (F6)
SPEC.	V1 = 0V ± 7mV, V2 = 700mV ± 7mV
TEST	PB OUT
ADJ.	VR752, VR753
INPUT	Component 100% Color Bar
MODE	EE
TAPE	----------
M.EQ	Waveform Monitor

1. Adjust VR752 so that the V1 is 0 ± 7mV.
2. Adjust VR753 so that the V2 is 700m ± 7mV.

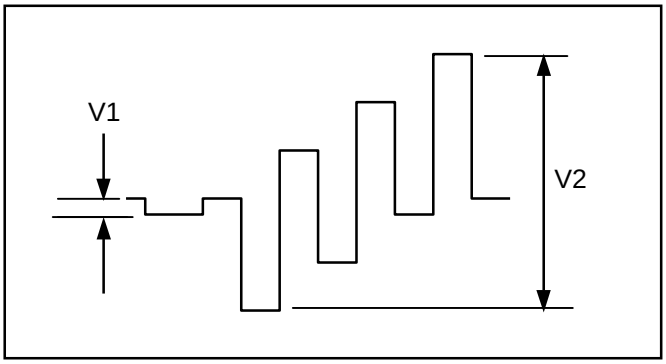

8-6. Component PR Level Adjustment

P.C.B.	V_IN (F6)
SPEC.	V1 = 0V ± 7mV, V2 = 700mV ± 7mV
TEST	PR OUT
ADJ.	VR802, VR803
INPUT	Component 100% Color Bar
MODE	EE
TAPE	----------
M.EQ	Waveform Monitor

1. Adjust VR802 so that the V1 is 0V ± 7mV.
2. Adjust VR803 so that the V2 is 700mV ± 7mV.

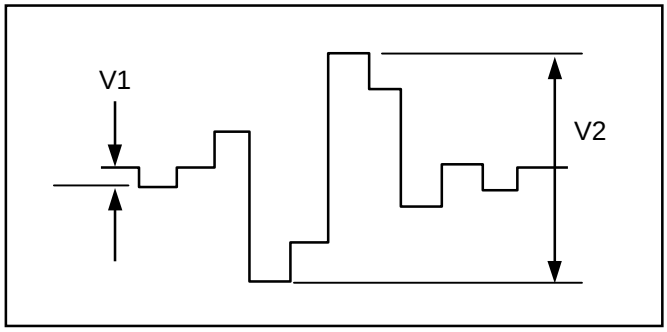

8-7. Component Y/C Timing Adjustment

P.C.B.	V_IN (F6)
SPEC.	0 ± 10nsec
TEST	Y, PB, PR OUT
ADJ.	VR751 (PB), VR801 (PR)
INPUT	Component IN : BOWTIE
MODE	EE
TAPE	----------
M.EQ	Waveform Monitor

1. Adjust VR751 so that the minimum level of the Y/PB timing signal is 0 ± 10nsec against the center scale.

   Adjust VR801 so that the minimum level of the Y/PB timing signal is 0 ± 10nsec against the center scale.

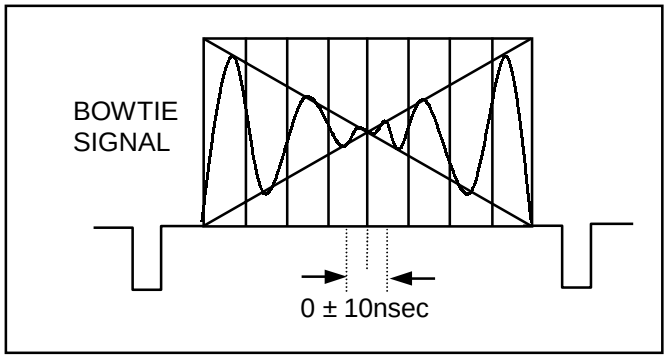

8-8. Composite Input Level Adjustment

P.C.B.	V_IN (F6)
SPEC.	V1 = 1.6V ± 0.02V
TEST	TP1(SUB P.C.B.), TP351
ADJ.	VR351, VR301
INPUT	COMPOSITE 75% Color Bar (Set up 7.5%)
MODE	EE
TAPE	----------
M.EQ	Oscilloscope

1. Observe TP1 and adjust VR351 at the point where the sync tip just begin to saturate.
2. Adjust VR301 so that the voltage at TP351 is 1.6V ± 0.02V.

   NOTE: Oscilloscope trigger should be connect to Connector P2-16a

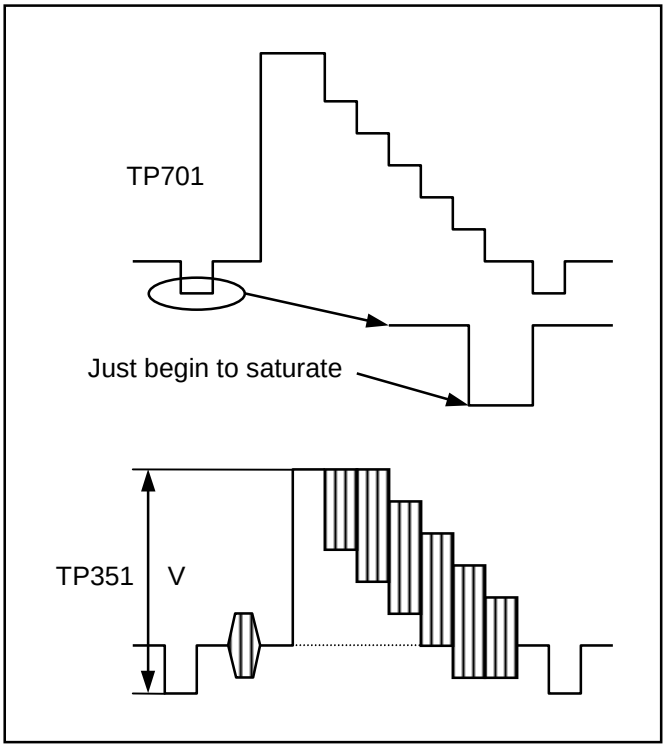

8-9. Composite Y Level Adjustment

P.C.B.	V_IN (F6)
SPEC.	V = 700mV ± 7mV
TEST	Y OUT
ADJ.	VR352
INPUT	COMPOSITE 75% Color Bar (Set up 7.5%)
MODE	EE
TAPE	----------
M.EQ	Waveform Monitor

1. Adjust VR455 so that the V is 700mV ± 7mV.

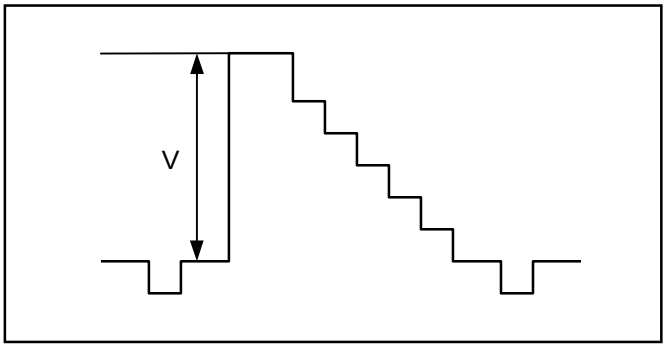

8-10.Composite Chroma Level Adj.

P.C.B.	V_IN (F6)
SPEC.	V = 400mV ± 20mV
TEST	TP503, GND:TG4
ADJ.	VR451
INPUT	COMPOSITE 75% Color Bar (Set up 7.5%)
MODE	EE
TAPE	----------
M.EQ	Waveform Monitor

1. Adjust VR451 so that the V is 400mV ± 20mV.

   NOTE: Oscilloscope trigger should be connect to Connector P2-16a.

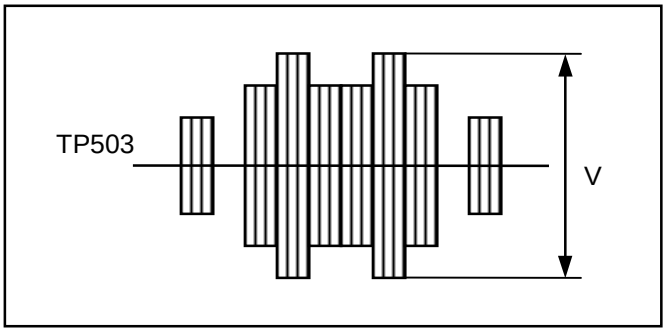

8-11. Composite Color Demodulation Adjustment

P.C.B.	V_IN (F6)
SPEC.	See figure
TEST	TP501, GND:TG4
ADJ.	VR501, VR512
INPUT	COMPOSITE 75% Color Bar (Set up 7.5%)
MODE	EE
TAPE	----------
M.EQ	Oscilloscope

1. Turn VR512 to fully counter-clockwise.
2. Adjust VR501 so that the noise portion is positioned on the top of A portion as shown in figure.
3. Adjust VR512 so that the level V is become 0Vp-p.

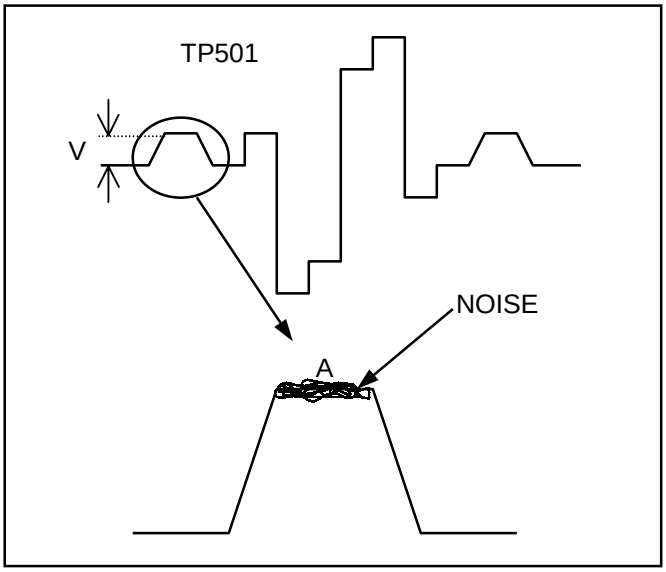

8-12. Composite PB Level Adjustment

P.C.B.	V_IN (F6)
SPEC.	V = 486mV ± 7mV
TEST	PB OUT
ADJ.	VR505
INPUT	COMPOSITE 75% Color Bar (Set up 7.5%)
MODE	EE
TAPE	----------
M.EQ	Waveform Monitor

1. Adjust VR505 so that the V is 486mV ± 7mV

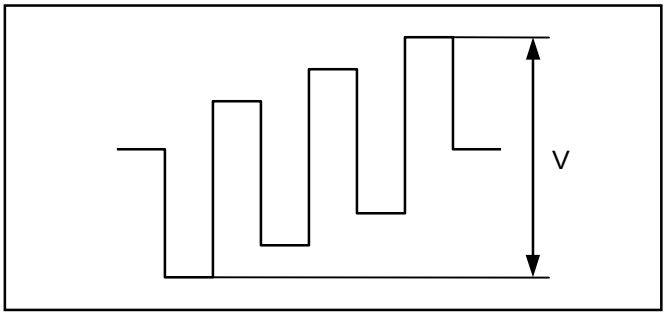

8-13. Composite PR Level Adjustment

P.C.B.	V_IN (F6)
SPEC.	V = 486mV ± 7mV
TEST	PR OUT
ADJ.	VR511
INPUT	COMPOSITE 75% Color Bar (Set up 7.5%)
MODE	EE
TAPE	----------
M.EQ	Waveform Monitor

1. Adjust VR511 so that the V is 486mV ± 7mV

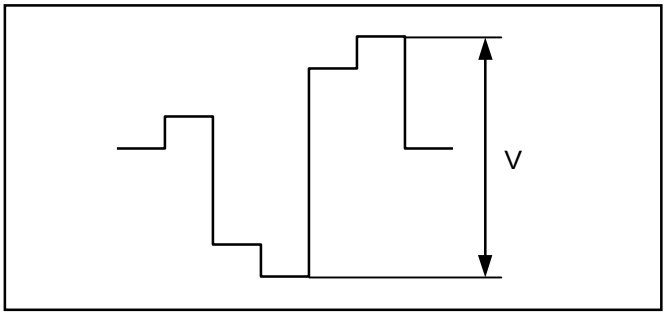

8-14. Composite YC Timing Adjustment

P.C.B.	V_IN (F6)
SPEC.	T = 0 ± 10nsec
TEST	Y PR PB OUT
ADJ.	VR510 (PB), VR507 (PR)
INPUT	Composite IN : 12.5T Pulse & Bar
MODE	EE
TAPE	----------
M.EQ	Waveform Monitor

1. Confirm that the 12.5T Pulse & Bar signal appeared correctly on the scope with Component Y OUT as shown in figure.
2. Confirm that the 12.5T Pulse portion appeared correctly on the scope with Component PB and PR OUT as shown in figure.
3. Set WFM monitor to DIFF mode. In case of set the DIFF mode, waveform of Y, PB and PR signals are integrated as shown in figure.
4. Expand the 12.5 pulse portion (an ellipse dotted portion as indicated as figure) and set the cursor to 0 cross point as shown in figure.
5. Sine-wave is appeared on the scope by expansion as shown in figure.
6. Adjust VR510(PB) and VR507(PR) so that the phase synchronized between Y and PB, PR signals.

NOTE: Please use type of WFM Monitor attached DIFF mode

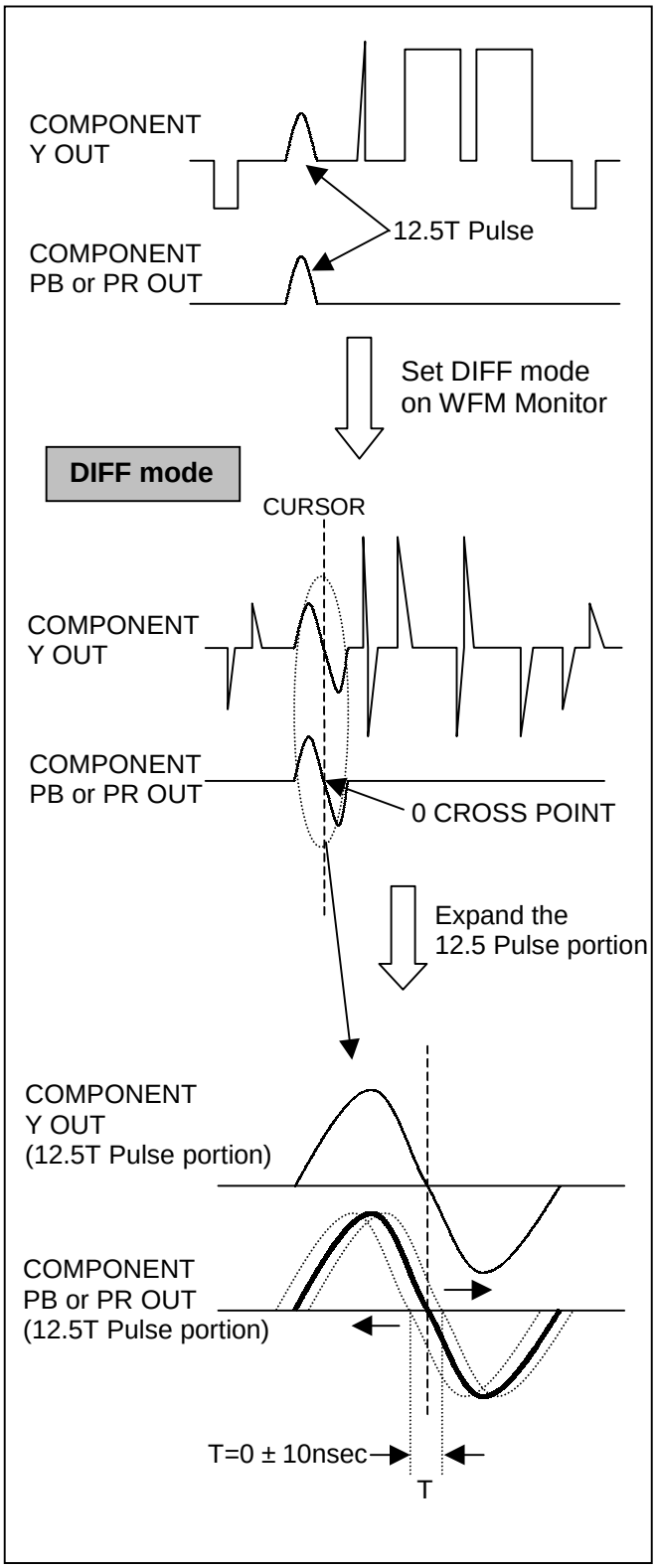

8-15. Composite SCH Detection Adjustment

P.C.B.	V_IN (F6)
SPEC.	T = 70 ± 10nsec
TEST	CF OUT (TEST SIG GEN) Connector P2-8C (INCOME CF0 pulse) Pin 3 of IC508
ADJ.	VR502
INPUT	COMPOSITE 75% Color Bar (Set up 7.5%)
MODE	EE
TAPE	----------
M.EQ	Oscilloscope

1. Set VR502 fully CCW.
2. If Income CF0 pulse does not negative pulse, slowly turn VR502 CW and set the position where the Income CF0 pulse just changes from the positive to negative phase as shown in below figure.
3. Set the VR502 so that the phase of Income CF0 pulse just changes from the negative to positive position as shown in below figure.
4. Slowly turn VR502 CW so that the rising edge A delayed 70usec ± 10nsec as shown in below figure.

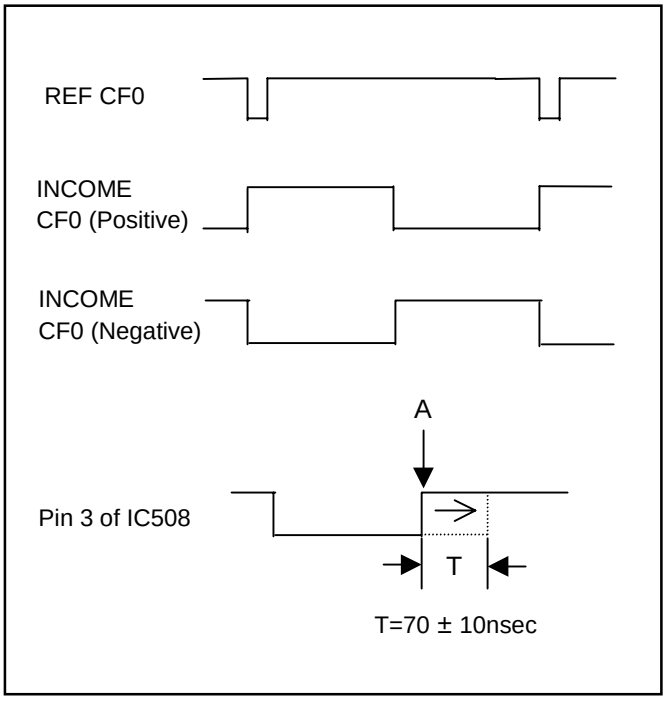

8-16. Composite Vector Adjustment

P.C.B.	V_IN (F6)
SPEC.	All vector dots are In Inner Boxes
TEST	COMPOSITE OUT
ADJ.	VR512
INPUT	COMPOSITE 75% Color Bar (Set up 7.5%)
MODE	EE
TAPE	----------
M.EQ	Vector Scope

1. Adjust VR512 so that the all vector dots are in the inner boxes.

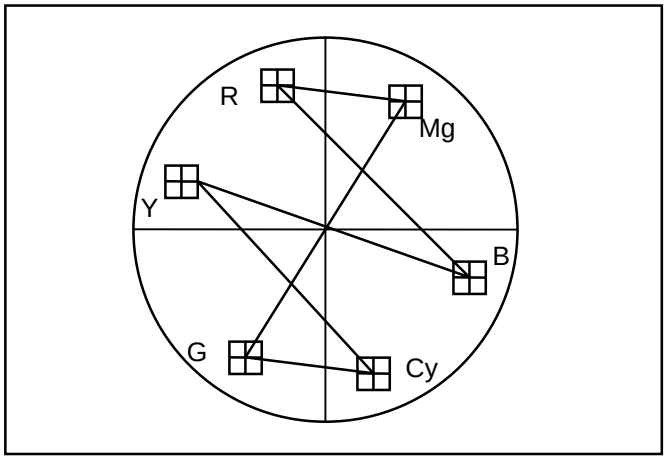

8. V IN P. C. Board [FOR PAL ONLY]

8-1. Preparation for Video In Adjustment

1. Connect the equipment as shown in the figure.
2. V IN P.C.Board adjustment should be performed after the V OUT P.C.Board adjustment.

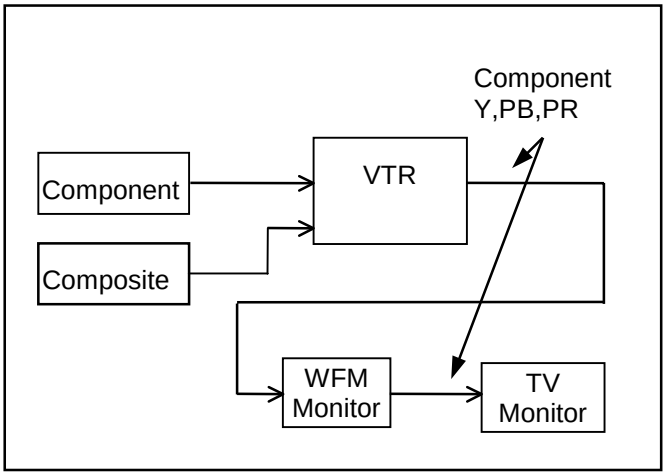

8-2. 13.5MHz VCO Adjustment

P.C.B.	V_IN (F6)
SPEC.	0V ± 0.1V
TEST	TP553, GND:TG6
ADJ.	VL551, VR552
INPUT	Component 100% Colour Bar
MODE	EE
TAPE	----------
M.EQ	Oscilloscope

1. Set VR552 to the center.
2. Adjust VL551 so that the DC Voltage is 0V ± 0.1V.

8-3. Component Y Timing Adjustment

P.C.B.	V_IN (F6)
SPEC.	V = ± 0.5 degree
TEST	VIDEO OUT 1
ADJ.	VR551
INPUT	Composite 100% Colour Bar
MODE	EE
TAPE	----------
M.EQ	Vector Scope

1. Connect the vector scope to composite out terminal.
2. Expand the Vector Alignment Locus, where the blue point position on vector scale(X point as shown in below figure) and set the Vector Alignment Locus on the u-pivot by adjust gain and phase VR on the vector scope.
3. Expand the Vector Alignment Locus 10% as compare with 100% as shown in below figure.
4. Adjust VR551 so that the vector adjustment locus is become straight, it should be in specification.

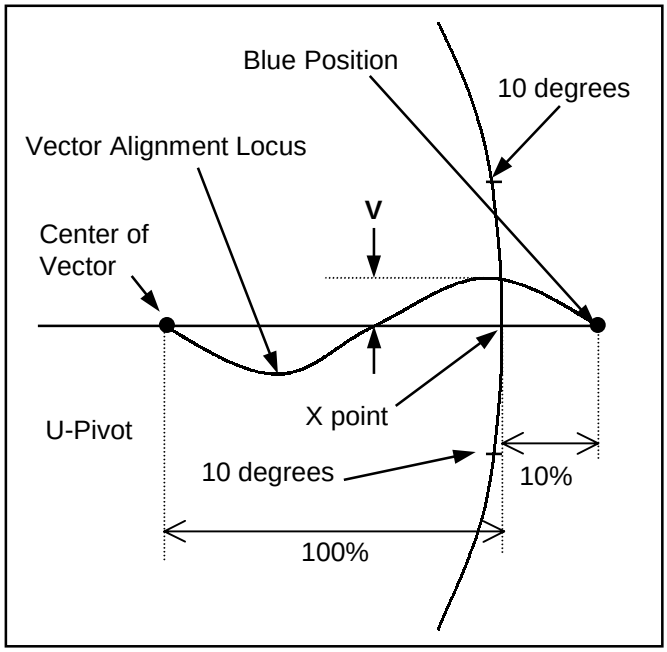

NOTE: In case of use VM700A.

1. Set the blue point position to tip of U-Pivot.
2. Set the Average is ON of VM700A
3. Adjust VR551 so that the vector adjustment locus is match to X point, and it should be in specification.

8-4. Component Y Level Adjustment

P.C.B.	V_IN (F6)
SPEC.	V1 = 0V ± 7mV, V2 = 700mV ± 7mV
TEST	Y OUT
ADJ.	VR652, VR651
INPUT	Component 100% Colour Bar
MODE	EE
TAPE	----------
M.EQ	Waveform Monitor

1. Adjust VR652 so that the V1 is 0V ± 7mV.
3. Adjust VR651 so that the V2 is 700mV ± 7mV.

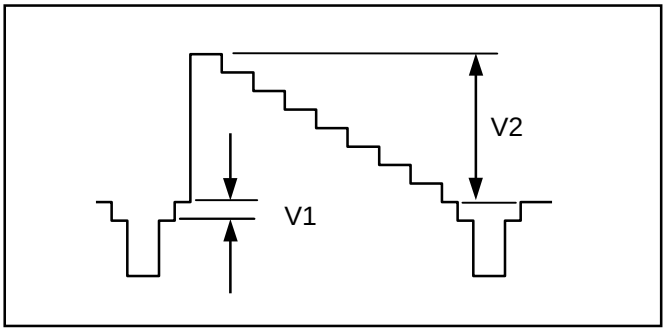

8-5. Component PB Level Adjustment

P.C.B.	V_IN (F6)
SPEC.	V1 = 0V ± 7mV, V2 = 700mV ± 7mV
TEST	PB OUT
ADJ.	VR703, VR702
INPUT	Component 100% Colour Bar
MODE	EE
TAPE	----------
M.EQ	Waveform Monitor

1. Adjust VR703 so that the V1 is 0 ± 7mV.
2. Adjust VR702 so that the V2 is 700m ± 7mV.

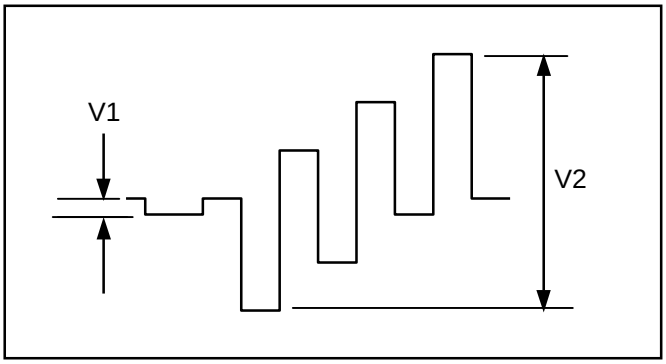

8-6. Component PR Level Adjustment

P.C.B.	V_IN (F6)
SPEC.	V1 = 0V ± 7mV, V2 = 700mV ± 7mV
TEST	PR OUT
ADJ.	VR753, VR752
INPUT	Component 100% Colour Bar
MODE	EE
TAPE	----------
M.EQ	Waveform Monitor

1. Adjust VR753 so that the V1 is 0V ± 7mV.
2. Adjust VR752 so that the V2 is 700mV ± 7mV.

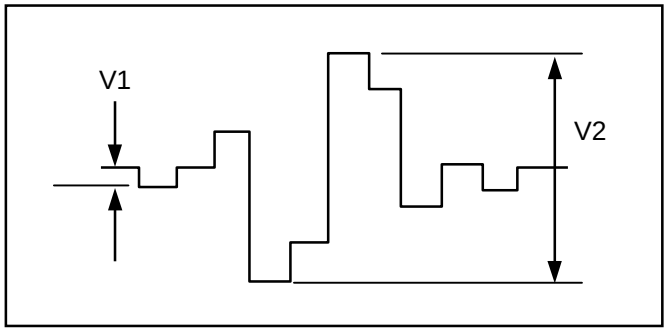

8-7. Component Y/C Timing Adjustment

P.C.B.	V_IN (F6)
SPEC.	0 ± 10nsec
TEST	Y, PB, PR OUT
ADJ.	VR701 (PB), VR751 (PR)
INPUT	Component IN : BOWTIE
MODE	EE
TAPE	----------
M.EQ	Waveform Monitor

1. Adjust VR701 so that the minimum level of the Y/PB timing signal is 0 ± 10nsec against the center scale.

   Adjust VR751 so that the minimum level of the Y/PB timing signal is 0 ± 10nsec against the center scale.

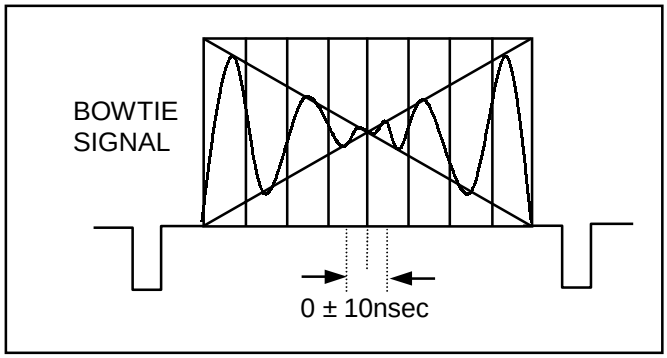

8-8. Composite Input Level Adjustment

P.C.B.	V_IN (F6)
SPEC.	V1 = 1.6V ± 0.02V
TEST	TP651, TP301, GND:TG6
ADJ.	VR301, VR251
INPUT	COMPOSITE 100% Colour Bar
MODE	EE
TAPE	----------
M.EQ	Oscilloscope

1. Observe TP651 and adjust VR301 at the point where the sync tip just begin to saturate.
2. Adjust VR251 so that the voltage at TP301 is 1.6V ± 0.02V.
   NOTE: Oscilloscope trigger should be connect to Connector P2-16a

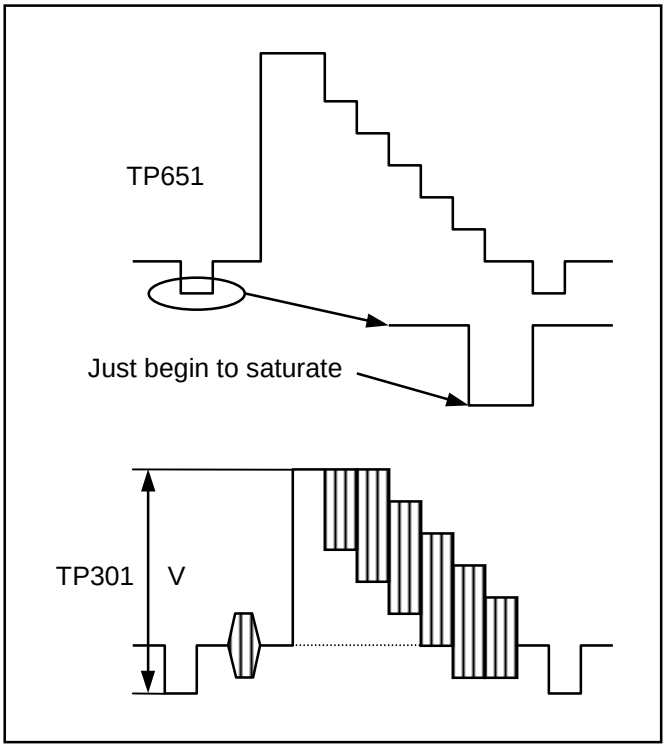

8-9. Composite Y Level Adjustment

P.C.B.	V_IN (F6)
SPEC.	V = 700mV ± 7mV
TEST	Y OUT
ADJ.	VR352
INPUT	COMPOSITE 100% Colour Bar
MODE	EE
TAPE	----------
M.EQ	Waveform Monitor

1. Adjust VR352 so that the V is 700mV ± 7mV.

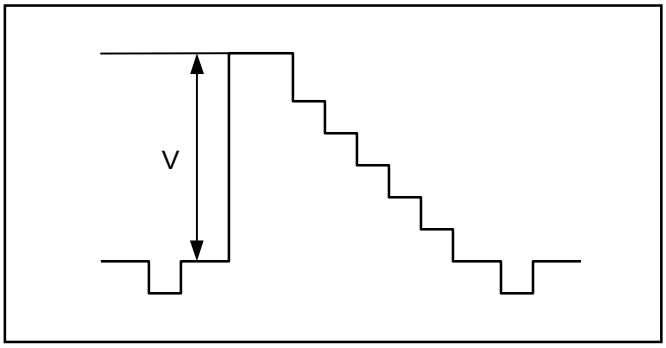

8-10.Composite Chroma Level Adj.

P.C.B.	V_IN (F6)
SPEC.	V = 500mV ± 20mV
TEST	TP451, GND:TG6
ADJ.	VR351
INPUT	COMPOSITE 100% Colour Bar
MODE	EE
TAPE	----------
M.EQ	Waveform Monitor

1. Adjust VR351 so that the V is 500mV ± 20mV.
   NOTE: Oscilloscope trigger should be connect to Connector P2-16a.

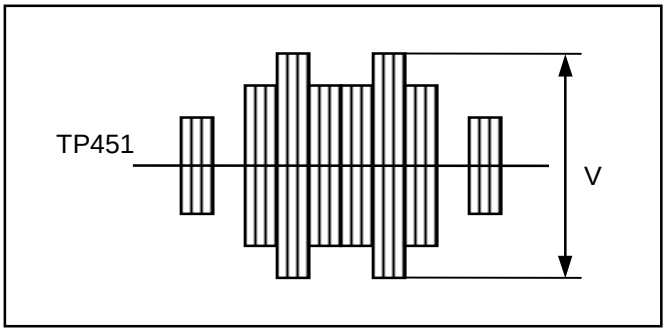

8-11. Composite Colour Demodulation Adjustment

P.C.B.	V_IN (F6)
SPEC.	See figure
TEST	TP401, GND:TG6
ADJ.	VR408, VR409
INPUT	COMPOSITE 100% Colour Bar
MODE	EE
TAPE	----------
M.EQ	Oscilloscope

1. Adjust VR409 so that the waveform is as shown in figure (no double image).
2. Adjust VR408 so that the noise portion is positioned on the top of A portion as shown in figure.

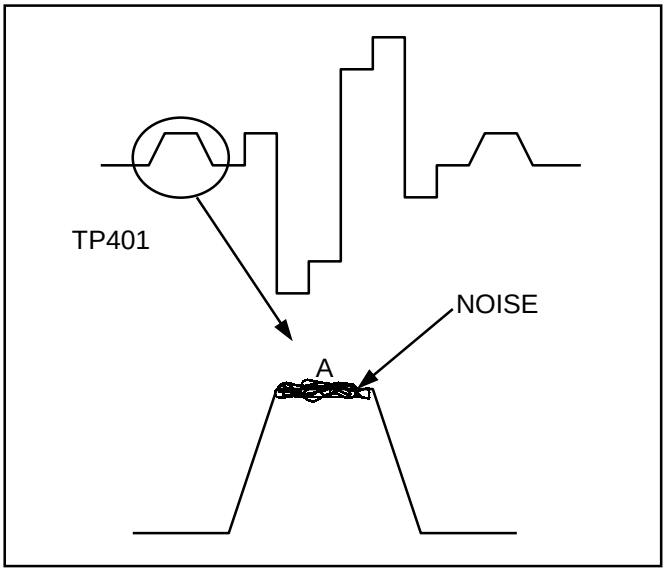

8-12. Composite PB Level Adjustment

P.C.B.	V_IN (F6)
SPEC.	V = 700mV ± 7mV
TEST	PB OUT
ADJ.	VR460
INPUT	COMPOSITE 100% Colour Bar
MODE	EE
TAPE	----------
M.EQ	Waveform Monitor

1. Adjust VR460 so that the V is 700mV ± 7mV

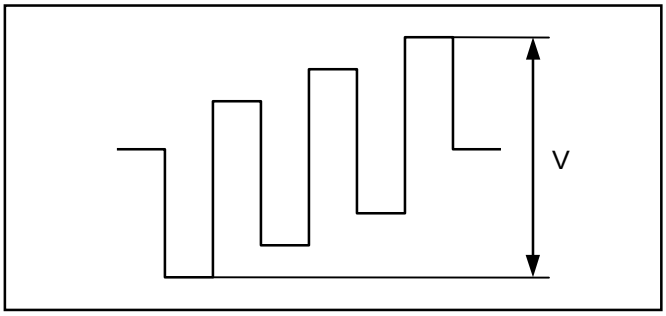

8-13. Composite PR Level Adjustment

P.C.B.	V_IN (F6)
SPEC.	V = 700mV ± 7mV
TEST	PR OUT
ADJ.	VR464
INPUT	COMPOSITE 100% Colour Bar
MODE	EE
TAPE	----------
M.EQ	Waveform Monitor

1. Adjust VR464 so that the V is 700mV ± 7mV

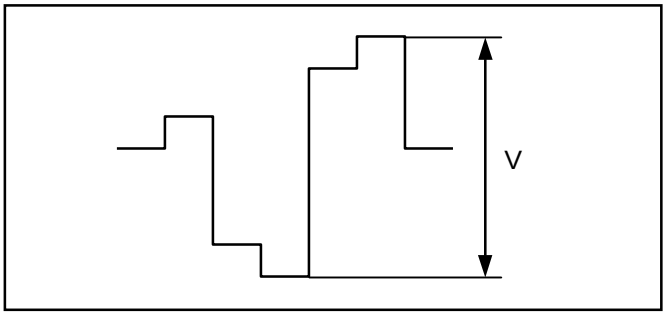

8-14. Composite YC Timing Adjustment

P.C.B.	V_IN (F6)
SPEC.	T = 0 ± 10nsec
TEST	Y PR PB OUT
ADJ.	VR459 (PB), VR463 (PR)
INPUT	Composite IN : 12.5T Pulse & Bar
MODE	EE
TAPE	----------
M.EQ	Waveform Monitor

1. Confirm that the 12.5T Pulse & Bar signal appeared correctly on the scope with Component Y OUT as shown in figure.
2. Confirm that the 12.5T Pulse portion appeared correctly on the scope with Component PB and PR OUT as shown in figure.
3. Set WFM monitor to DIFF mode. In case of set the DIFF mode, waveform of Y, PB and PR signals are integrated as shown in figure.
4. Expand the 12.5 pulse portion (an ellipse dotted portion as indicated as figure) and set the cursor to 0 cross point as shown in figure.
5. Sine-wave is appeared on the scope by expansion as shown in figure.
6. Adjust VR459 (PB) and VR463 (PR) so that the phase synchronized between Y and PB, PR signals.

NOTE: Please use type of WFM Monitor attached DIFF mode

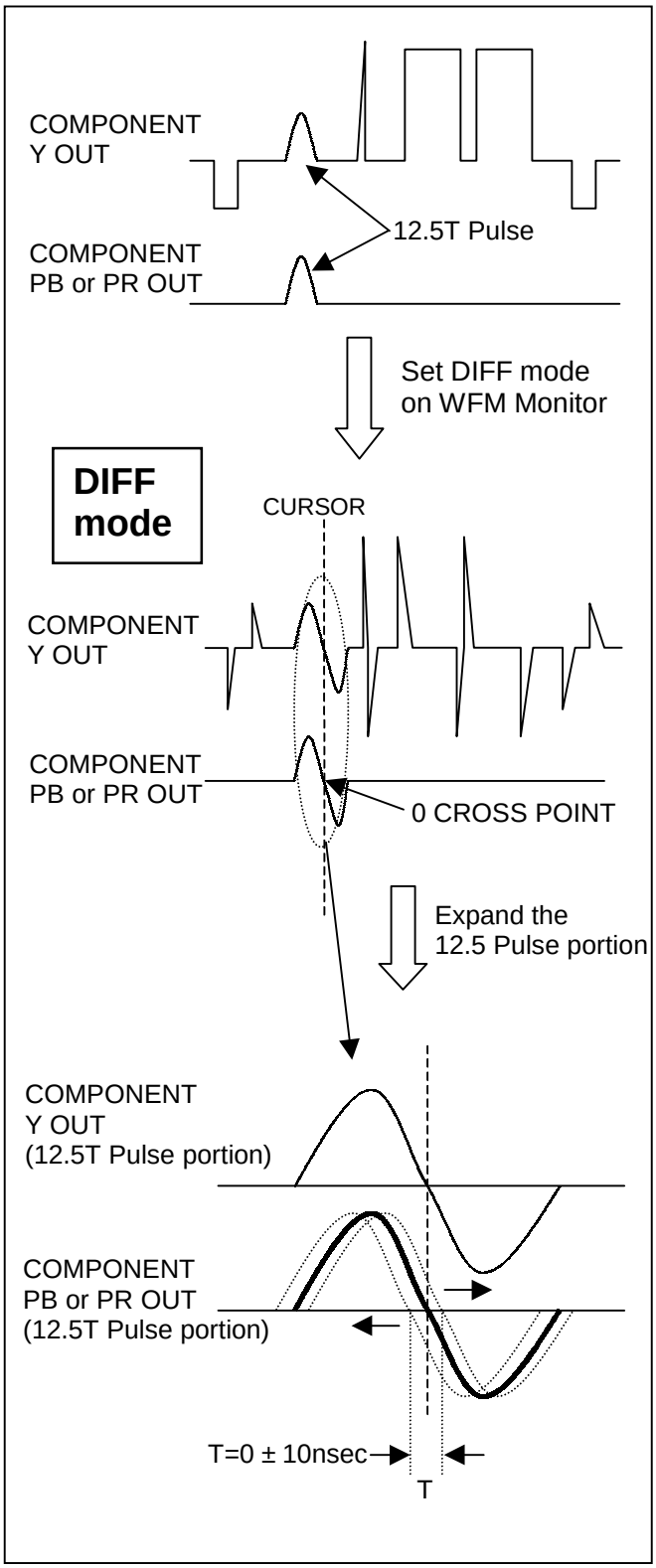

8-15. Composite SCH Detection Adjustment

P.C.B.	V_IN (F6)
SPEC.	T1 = T2 : ± 0.5msec
TEST	CF OUT (TEST SIG GEN) Connector P2-8C (INCOME CF0 pulse) TP403, TP405
ADJ.	VR407
INPUT	COMPOSITE 100% Colour Bar
MODE	EE
TAPE	----------
M.EQ	Oscilloscope

1. Set VR407 fully CCW.
2. If Income CF0 pulse does not negative pulse, slowly turn VR407 CW and set the position where the Income CF0 pulse just changes from the positive to negative phase as shown in below figure.
3. Set the VR407 so that the phase of Income CF0 pulse just changes from the negative to positive position as shown in below figure.
4. Slowly turn VR407 CW so that T1 and T2 portion in specification.

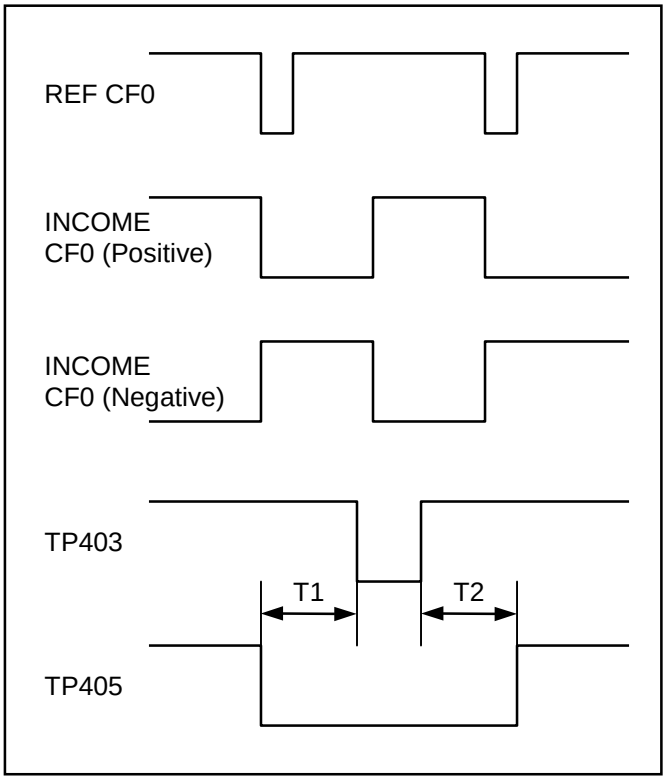

8-16. Composite Vector Adjustment

P.C.B.	V_IN (F6)
SPEC.	All vector dots are in Inner Boxes
TEST	COMPOSITE OUT
ADJ.	VR409
INPUT	COMPOSITE 100% Colour Bar
MODE	EE
TAPE	----------
M.EQ	Vector Scope

1. Adjust VR409 so that the all vector dots are in the inner boxes.

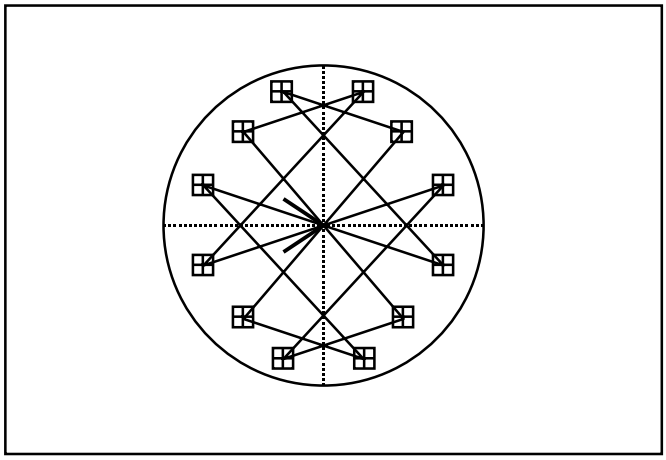

9. AUDIO ADDA

9-1. Initial Setting of Audio Adjustment

< Switch Setting >

1. Set the audio impedance switches as shown below.

SW1	HIGH
SW41	HIGH

< Measurement Equipment Setting >

1. In case of use Audio Precision, please set switches as shown below.

GENERATOR

OUTPUT	A & B	BAL
	50 ohm	FLOAT

ANALYZER

CHANNEL-A	INPUT	100 kΩ
CHANNEL-B	INPUT	100 kΩ

< Service Menu Setting >

1. Set the DIP SW 1-1 to ON at the reverse side of the front panel.
2. Open the Audio Adjust menu on the Service Menu.
3. Set the items as shown below.

E01	METER REF.	Fs - 20
E05	REF. LEVEL2	0 dB
E07	MIC IN LV	ENA

4. Set the DIP SW 1-1 to OFF.

< User Menu Setting >

1. Open the AUDIO item (No. 700 series) of the SETUP-MENU and set the items as shown below.

700	CH1 IN LV	0 dB
701	CH2 IN LV	0 dB
703	CH1 OUT LV	0 dB
704	CH2 OUT LV	0 dB
706	MONI L OUT LV	0 dB
707	MONI R OUT LV	0 dB
708	MONI OUT	VAR
709	EMPHASIS	OFF
714	REC CH1	CH1
715	REC CH2	CH2
722	INT SG	OFF

9-2. Output Balance Adjustment

P.C.B.	A ADDA (F8)
SPEC.	Minimum
TEST	AUDIO OUT : CH1, CH2 MONIOUT : LCH, RCH
ADJ.	VR402 (CH1), VR477 (CH2) VR751 (LCH), VR831 (RCH)
INPUT	INT Signal
MODE	EE
TAPE	----------
M.EQ	Oscilloscope, Monitor TV

1. Set the items on SET UP menu as shown below.

708	MONI OUT	**UNITY**
722	INT SG	**ON**

2. Connect to the oscilloscope as shown below.

Oscilloscope	Output (VTR)
CH1	HOT (AUDIO OUT, MONI OUT)
CH2	COLD (AUDIO OUT, MONI OUT)

3. Set the oscilloscope's mode to ADD, and adjust VR402 so that the CH1 waveform level is minimum.
4. Repeat above adjustment in the same way about the other channels.

9-3. Output Level Adjustment

P.C.B.	A ADDA (F8)
SPEC.	0dBu ± 0.2dBu
TEST	AUDIO OUT : CH1, CH2 MONIOUT : LCH, RCH
ADJ.	VR401 (CH1), VR476 (CH2) VR702 (LCH), VR701 (RCH)
INPUT	INT Signal
MODE	EE
TAPE	----------
M.EQ	Oscilloscope, Audio Analyzer VTVM (Audio Precision)

1. Set the AUDIO item as shown below.

708	MONI OUT	**UNITY**
722	INT SG	**ON**

2. Adjust VR401 so that the CH1 level is in the specification.
3. Repeat above adjustment in the same way about the other channels.
4. Confirm all channels that the sine-wave output is normal.

9-4. Input CMRR Adjustment

P.C.B.	A ADDA (F8)
SPEC.	Less than –60dBu
TEST	TP201 (CH1), TP202 (CH2)
ADJ.	VR1 (CH1), VR41 (CH2)
INPUT	LINE IN (CH1,CH2) 1kHz,0dBu Sine-wave (CMTST)
MODE	EE
TAPE	----------
M.EQ	Oscilloscope, VTVM (Audio Precision), Monitor TV

1. Connect the oscilloscope to TP201.
2. Input the sine-wave signal to HOT and COLD terminal of CH1.
3. Adjust VR1 so that the CH1 output level is minimum and in the specification.
4. Repeat adjustment in the same way about CH2.

NOTE: In case of use Audio Precision, Change the GENERATOR OUTPUT mode to CMTS from BAL.. And after adjustment, return to BAL.

9-5. Input Level Adjustment

P.C.B.	A ADDA (F8)
SPEC.	0dBu ± 0.2dBu
TEST	AUDIO OUT (CH1, CH2)
ADJ.	VR2 (CH1), VR42 (CH2)
INPUT	LINE IN (CH1,CH2) 1kHz 0dBu Sine-wave (BAL)
MODE	EE
TAPE	----------
M.EQ	Oscilloscope, VTVM (Audio Precision), Monitor TV

1. Adjust VR2 so that the CH1 level is in the specification.
2. Repeat adjustment in the same way about CH2.

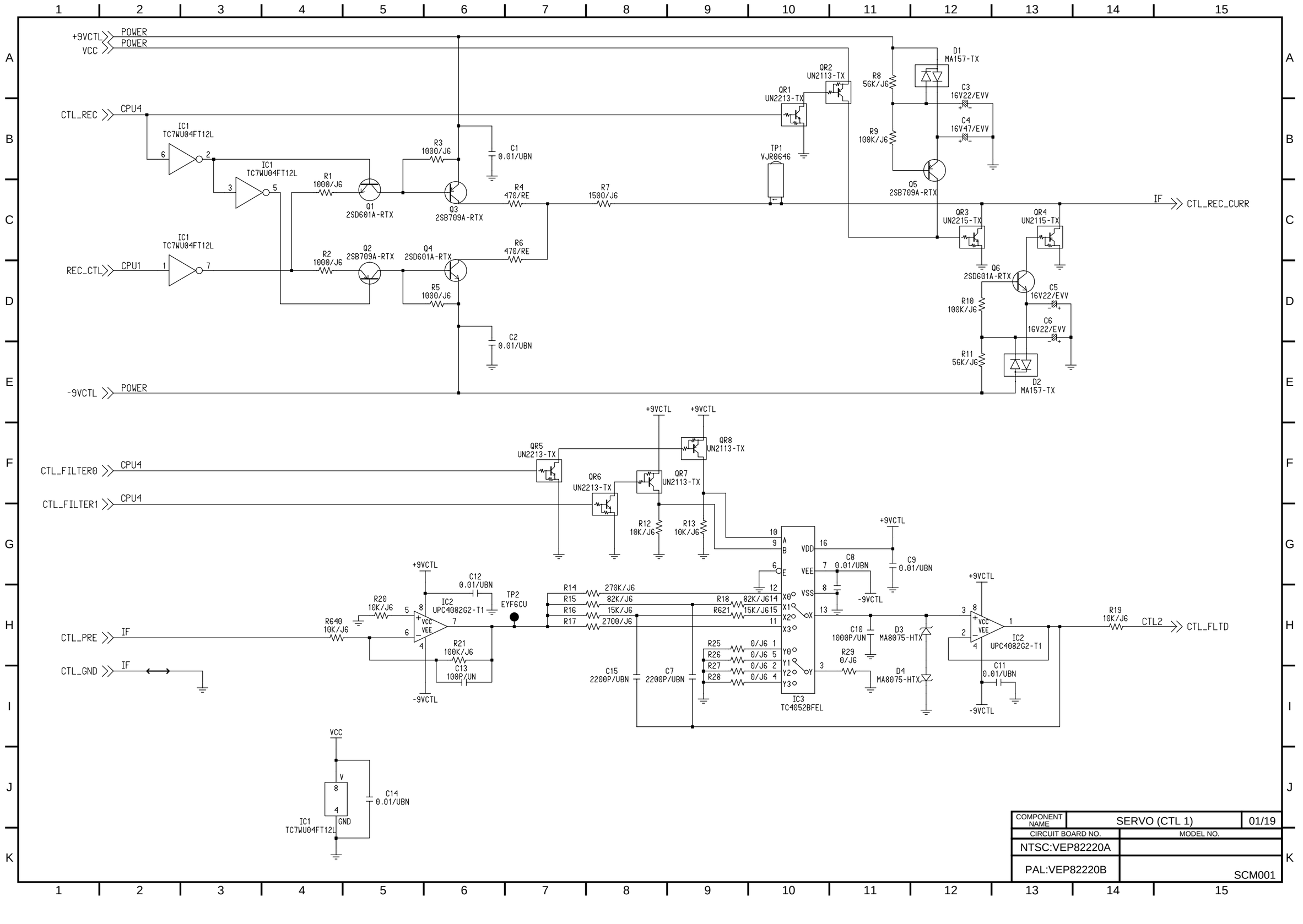

COMPONENT NAME	SERVO (CTL 1)	01/19
CIRCUIT BOARD NO.	MODEL NO.	
NTSC:VEP82220A		
PAL:VEP82220B	SCM001	

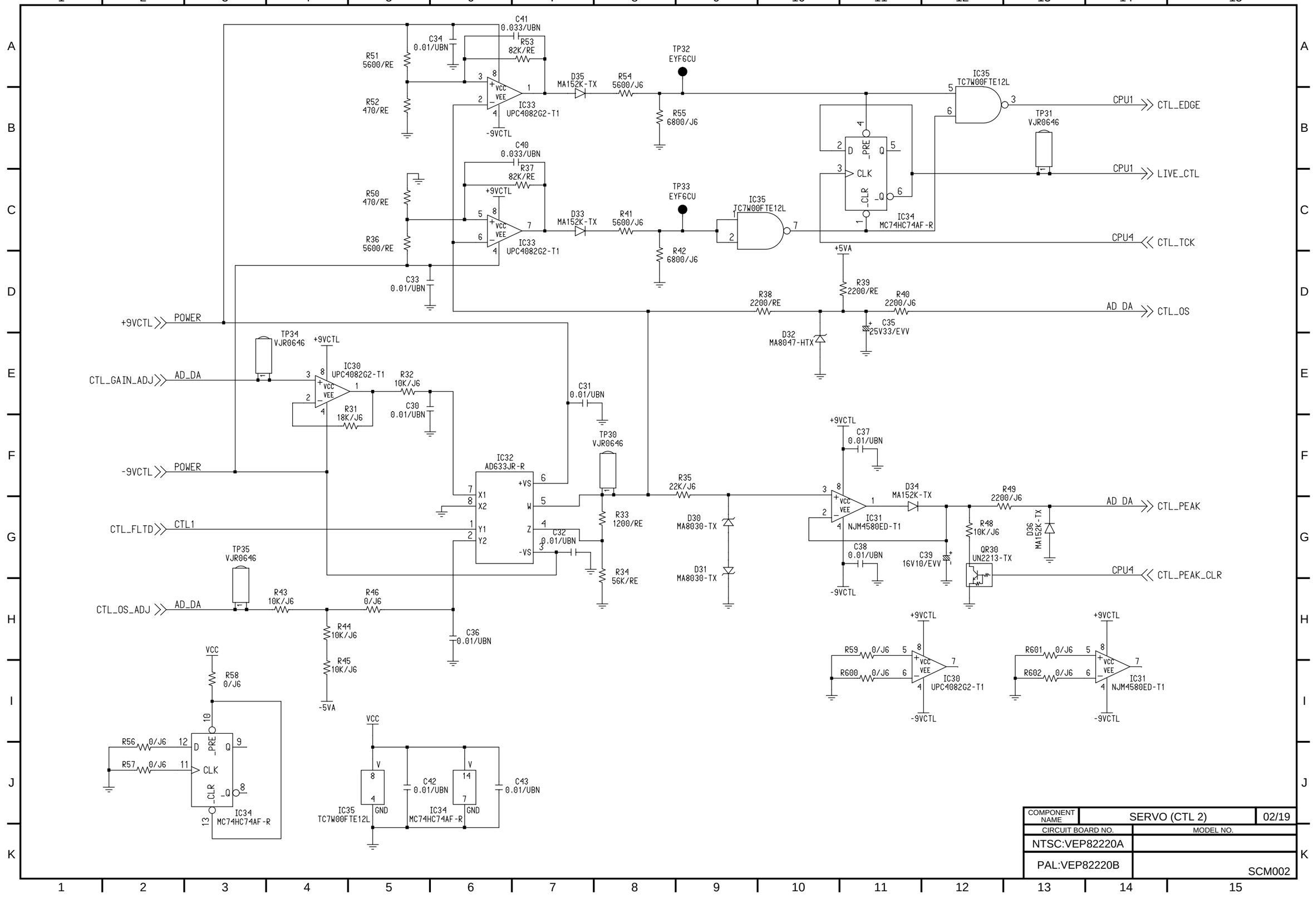

COMPONENT NAME	SERVO (CTL 2)	02/19
CIRCUIT BOARD NO.	MODEL NO.	
NTSC:VEP82220A		
PAL:VEP82220B		SCM002

1.56M_CK >> CPU3 — CP918
CTL_PULSE >> CPU1
TAPE_REV_H >> CPU4
N_P >> CPU4 — CP919
FRM_RS >> CPU4 — CP920

IC63 MC74HC74AF-R
IC60 MC74HC08AF-R
IC69 MC74HC32AF-R
IC61 MC74HC08AF-R
IC73 MC74HC11F-R
IC66 MC74HC74AF-R
IC70 MC74HC86AFR
IC71 MC74HC04AF-R
IC74 MC74HC27F-R
IC68 T74HC191AFT1
IC67 MC74HC157AFR
R60 100/J6
IC64 MC74HC74AF-R
IC65 MC74HC74AF-R
IC72 MC74HC74AF-R
VCC
R629 0/J6
TP60 VJR0646
IF >> FR_PULSE

R61 0/J6
R62 0/J6
R63 0/J6
R64 0/J6
R65 0/J6
R66 0/J6
R67 0/J6
R68 0/J6
R69 0/J6
R70 0/J6
R71 0/J6
R72 0/J6
R73 0/J6
R74 0/J6
R75 0/J6
R76 0/J6
R77 0/J6

C60 0.01/UBN
C61 0.01/UBN
C63 0.01/UBN
C64 0.01/UBN
C65 0.01/UBN
C66 0.01/UBN
C67 0.01/UBN
C68 0.01/UBN
C69 0.01/UBN
C70 0.01/UBN
C71 0.01/UBN
C72 0.01/UBN
C73 0.01/UBN
C74 0.01/UBN

COMPONENT NAME	SERVO (CTL 3)	03/19
CIRCUIT BOARD NO.		
NTSC:VEP82220A		
PAL:VEP82220B		SCM003

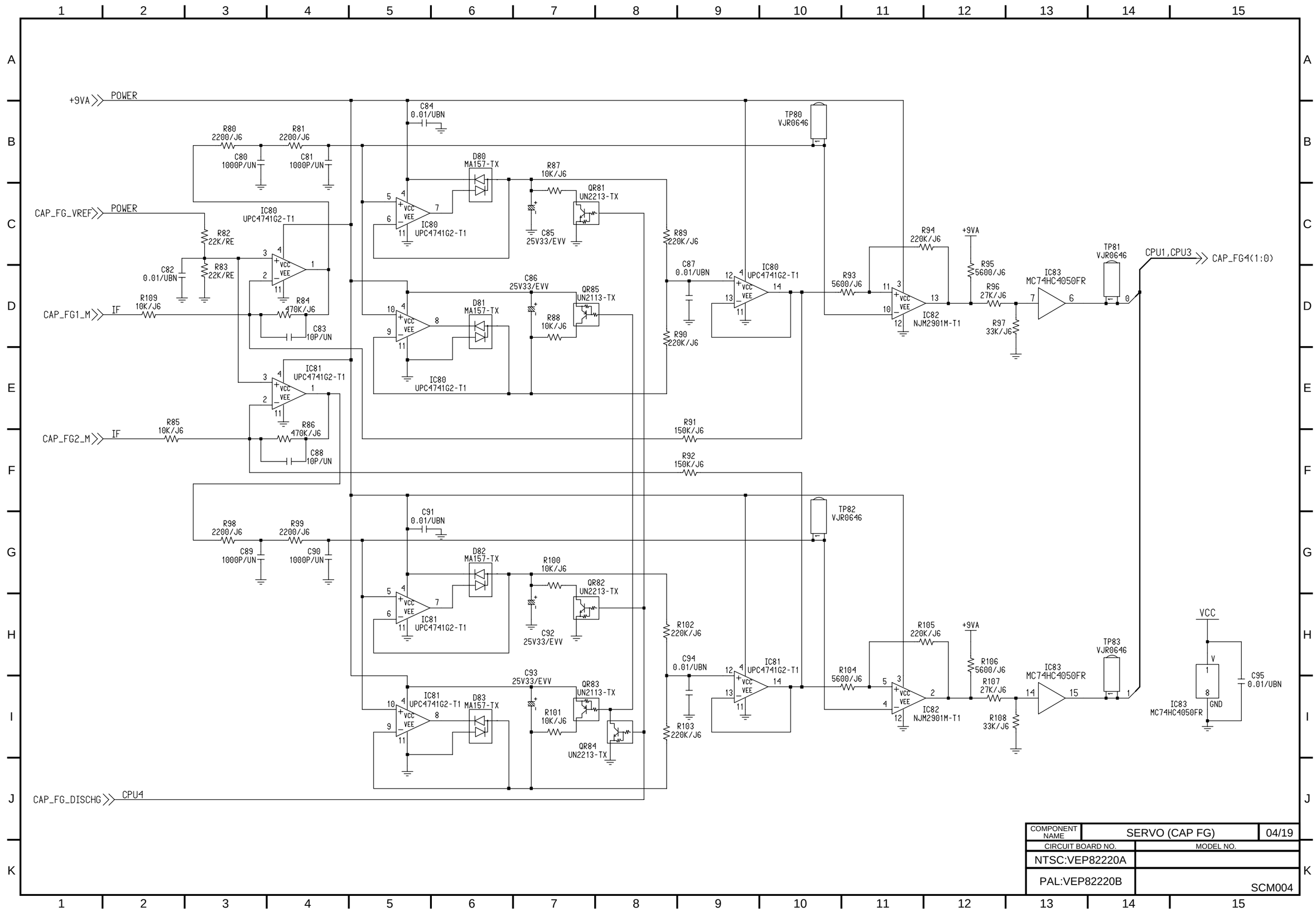

COMPONENT NAME	SERVO (CAP FG)	04/19
CIRCUIT BOARD NO.	MODEL NO.	
NTSC:VEP82220A		
PAL:VEP82220B		SCM004

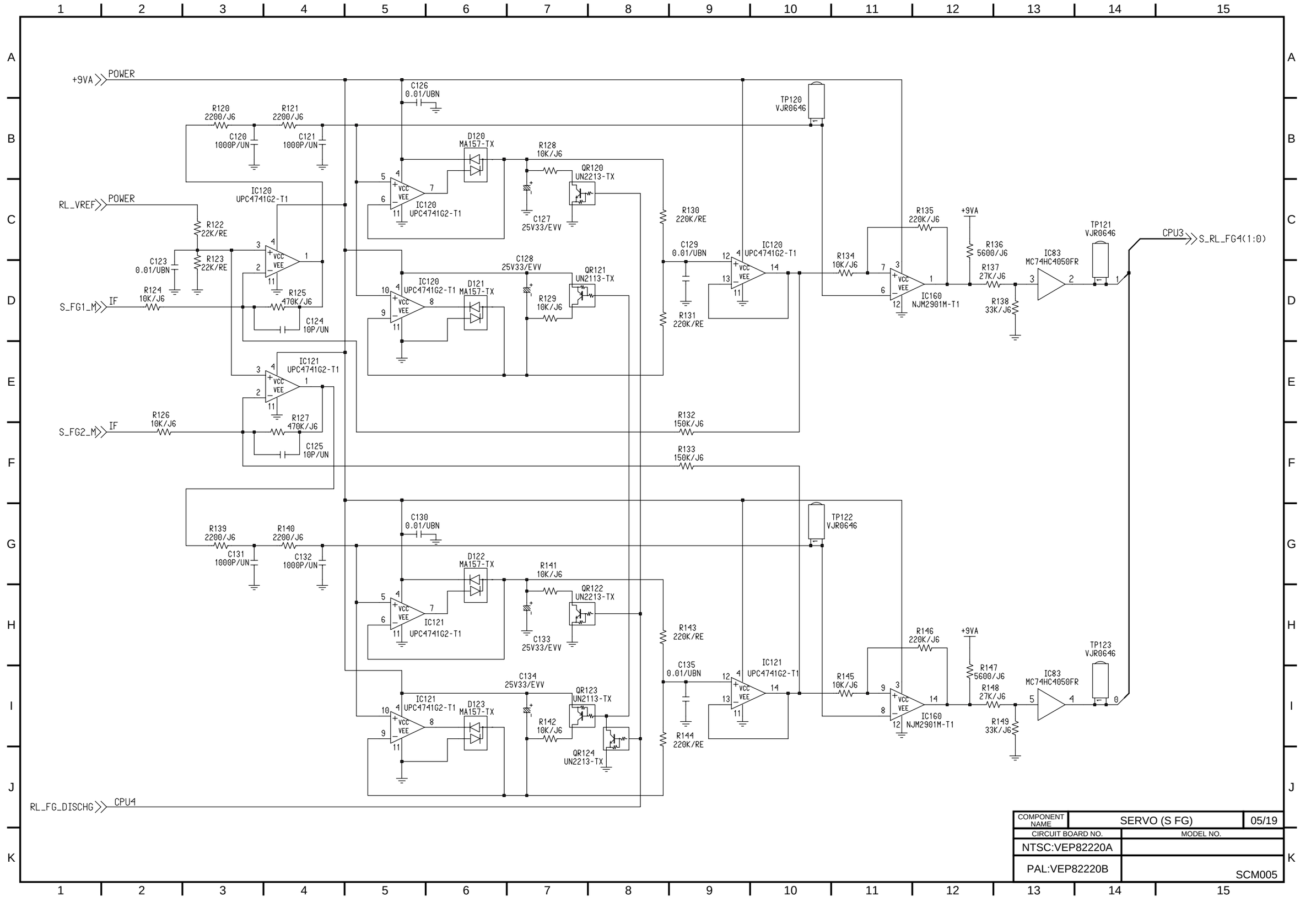
+9VA
POWER
R120 2200/J6
R121 2200/J6
C120 1000P/UN
C121 1000P/UN
C126 0.01/UBN
TP120 VJR0646
D120 MA157-TX
R128 10K/J6
QR120 UN2213-TX
C127 25V33/EVV
IC120 UPC4741G2-T1
RL_VREF
POWER
R122 22K/RE
C123 0.01/UBN
R123 22K/RE
S_FG1_M
IF
R124 10K/J6
R125 470K/J6
C124 10P/UN
R130 220K/RE
C129 0.01/UBN
R131 220K/RE
IC120 UPC4741G2-T1
C128 25V33/EVV
D121 MA157-TX
QR121 UN2113-TX
R129 10K/J6
IC121 UPC4741G2-T1
S_FG2_M
IF
R126 10K/J6
R127 470K/J6
C125 10P/UN
R132 150K/J6
R133 150K/J6
R135 220K/J6
R134 10K/J6
IC160 NJM2901M-T1
R136 5600/J6
R137 27K/J6
R138 33K/J6
IC83 MC74HC4050FR
TP121 VJR0646
CPU3
S_RL_FG4(1:0)
R139 2200/J6
R140 2200/J6
C131 1000P/UN
C132 1000P/UN
C130 0.01/UBN
TP122 VJR0646
D122 MA157-TX
R141 10K/J6
QR122 UN2213-TX
C133 25V33/EVV
R143 220K/RE
R144 220K/RE
C135 0.01/UBN
C134 25V33/EVV
D123 MA157-TX
R142 10K/J6
QR123 UN2113-TX
QR124 UN2213-TX
R146 220K/J6
R145 10K/J6
R147 5600/J6
R148 27K/J6
R149 33K/J6
TP123 VJR0646
RL_FG_DISCHG
CPU4
COMPONENT NAME
SERVO (S FG)
05/19
CIRCUIT BOARD NO.
MODEL NO.
NTSC:VEP82220A
PAL:VEP82220B
SCM005

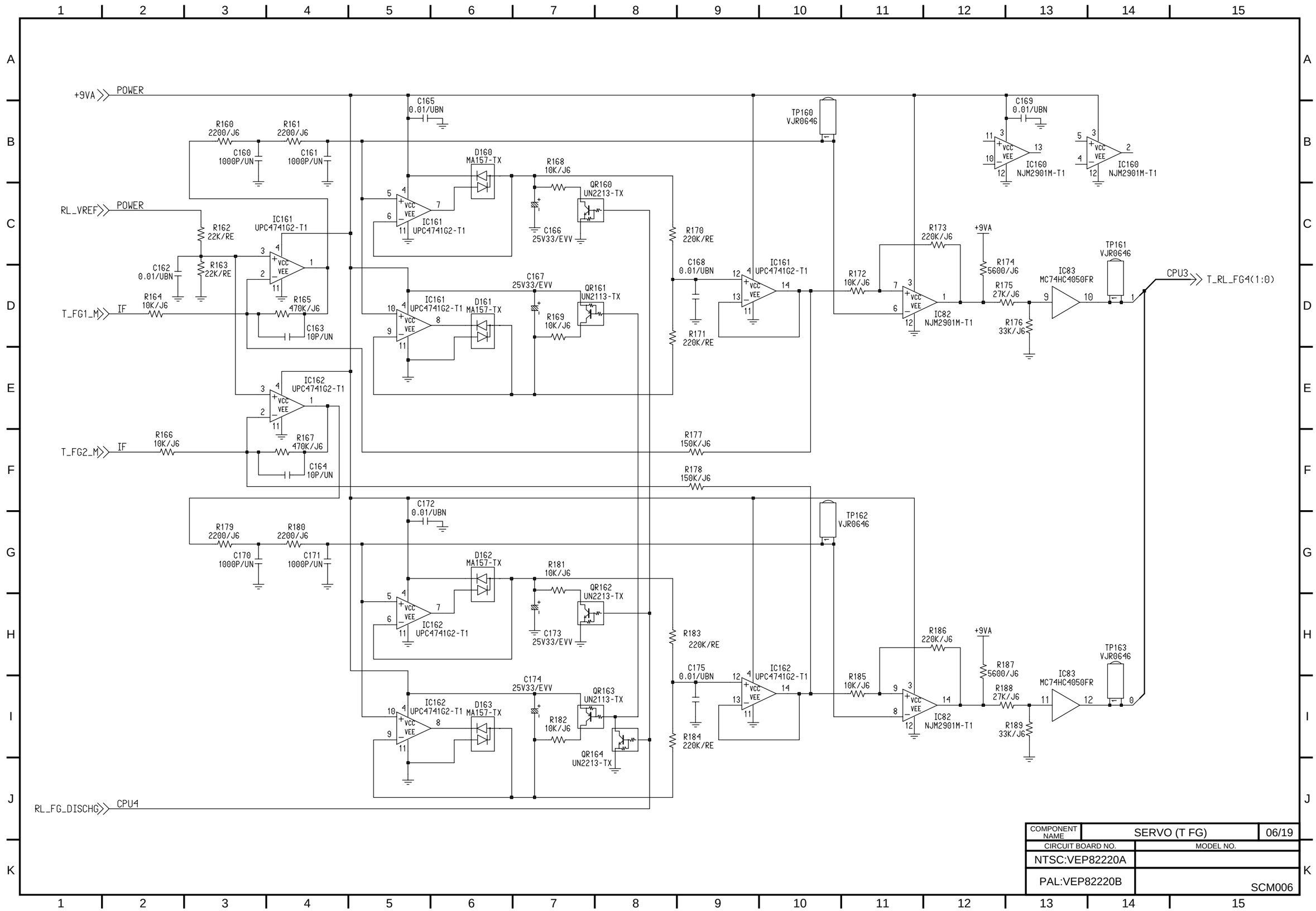

COMPONENT NAME	SERVO (T FG)	06/19
CIRCUIT BOARD NO.	MODEL NO.	
NTSC:VEP82220A		
PAL:VEP82220B		SCM006

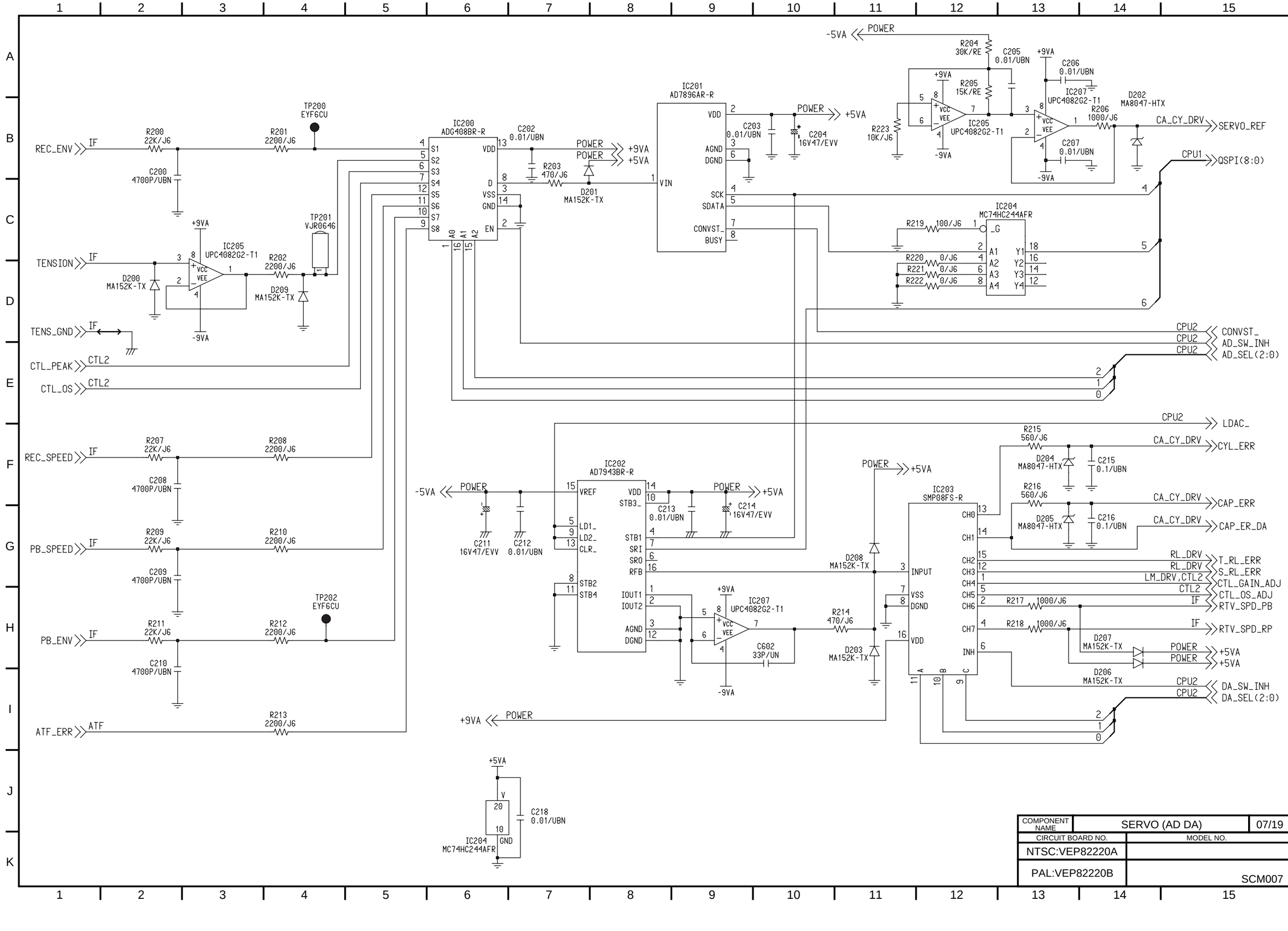
REC_ENV
IF
R200 22K/J6
C200 4700P/UBN
R201 2200/J6
TP200 EYF6CU
TENSION
D200 MA152K-TX
IC205 UPC4082G2-T1
R202 2200/J6
D209 MA152K-TX
TP201 VJR0646
+9VA
-9VA
TENS_GND
CTL_PEAK
CTL2
CTL_OS
REC_SPEED
R207 22K/J6
C208 4700P/UBN
R208 2200/J6
PB_SPEED
R209 22K/J6
C209 4700P/UBN
R210 2200/J6
TP202 EYF6CU
PB_ENV
R211 22K/J6
C210 4700P/UBN
R212 2200/J6
ATF_ERR
ATF
R213 2200/J6
IC200 ADG408BR-R
S1
S2
S3
S4
S5
S6
S7
S8
A0
A1
A2
EN
VDD
VSS
GND
C202 0.01/UBN
R203 470/J6
D201 MA152K-TX
POWER
+9VA
+5VA
IC201 AD7896AR-R
VIN
VDD
AGND
DGND
SCK
SDATA
CONVST_
BUSY
C203 0.01/UBN
C204 16V47/EVV
-5VA
R204 30K/RE
R205 15K/RE
C205 0.01/UBN
C206 0.01/UBN
IC207 UPC4082G2-T1
R206 1000/J6
D202 MA8047-HTX
CA_CY_DRV
SERVO_REF
R223 10K/J6
C207 0.01/UBN
CPU1
QSPI(8:0)
IC204 MC74HC244AFR
R219 100/J6
R220 0/J6
R221 0/J6
R222 0/J6
_G
A1
A2
A3
A4
Y1
Y2
Y3
Y4
CPU2
CONVST_
AD_SW_INH
AD_SEL(2:0)
LDAC_
IC202 AD7943BR-R
VREF
LD1_
LD2_
CLR_
STB1
STB2
STB3_
STB4
SRI
SRO
RFB
IOUT1
IOUT2
C211 16V47/EVV
C212 0.01/UBN
C213 0.01/UBN
C214 16V47/EVV
IC207 UPC4082G2-T1
C602 33P/UN
R214 470/J6
D208 MA152K-TX
D203 MA152K-TX
IC203 SMP08FS-R
INPUT
VSS
DGND
VDD
INH
CH0
CH1
CH2
CH3
CH4
CH5
CH6
CH7
R215 560/J6
D204 MA8047-HTX
C215 0.1/UBN
R216 560/J6
D205 MA8047-HTX
C216 0.1/UBN
CA_CY_DRV
CYL_ERR
CAP_ERR
CAP_ER_DA
RL_DRV
T_RL_ERR
S_RL_ERR
LM_DRV,CTL2
CTL_GAIN_ADJ
CTL2
CTL_OS_ADJ
IF
RTV_SPD_PB
R217 1000/J6
R218 1000/J6
RTV_SPD_RP
D207 MA152K-TX
D206 MA152K-TX
DA_SW_INH
DA_SEL(2:0)
+5VA
V
20
10
GND
C218 0.01/UBN
COMPONENT NAME
SERVO (AD DA)
07/19
CIRCUIT BOARD NO.
MODEL NO.
NTSC:VEP82220A
PAL:VEP82220B
SCM007

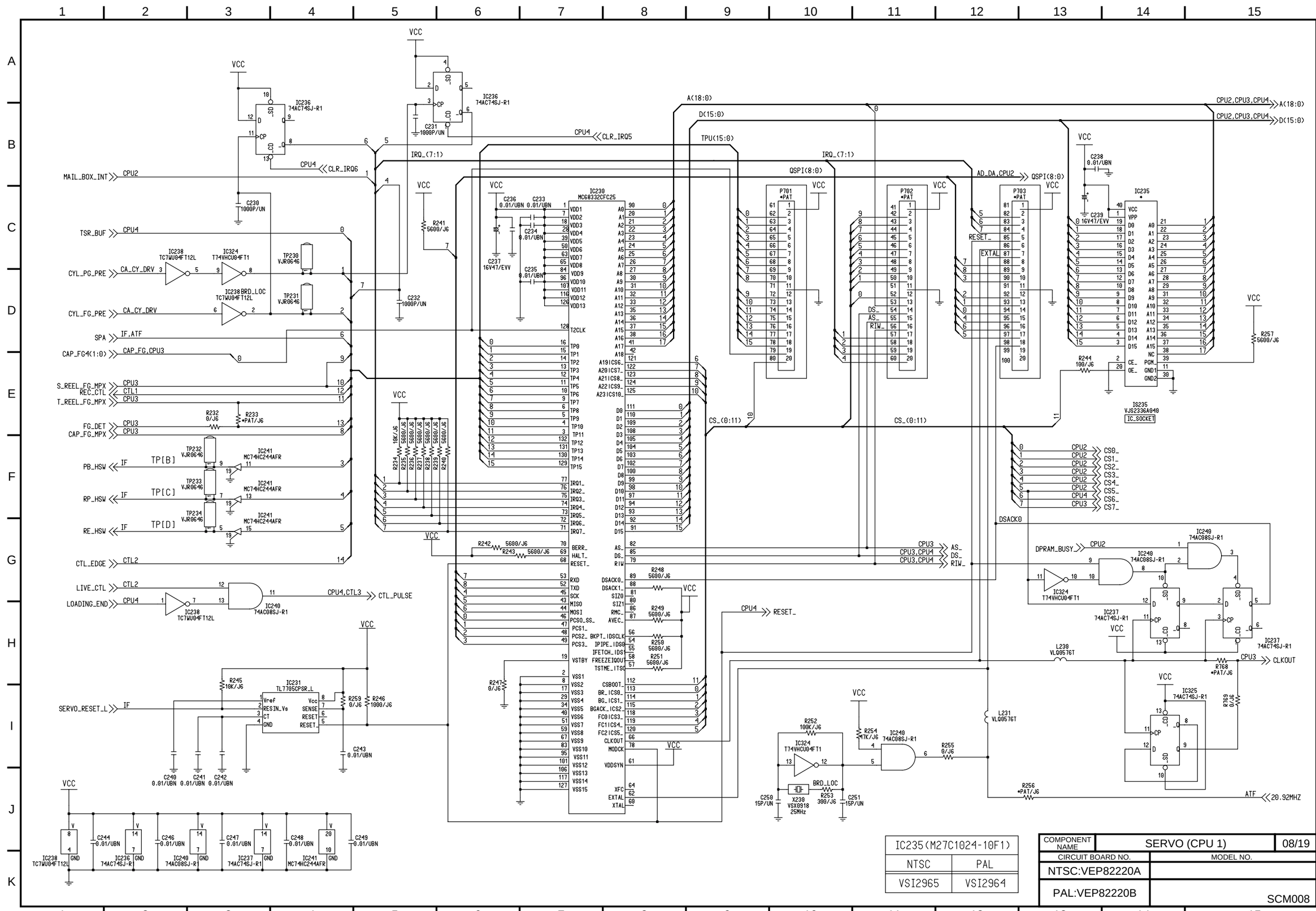
IC235(M27C1024-10F1)
NTSC
PAL
VSI2965
VSI2964
COMPONENT NAME
SERVO (CPU 1)
08/19
CIRCUIT BOARD NO.
MODEL NO.
NTSC:VEP82220A
PAL:VEP82220B
SCM008

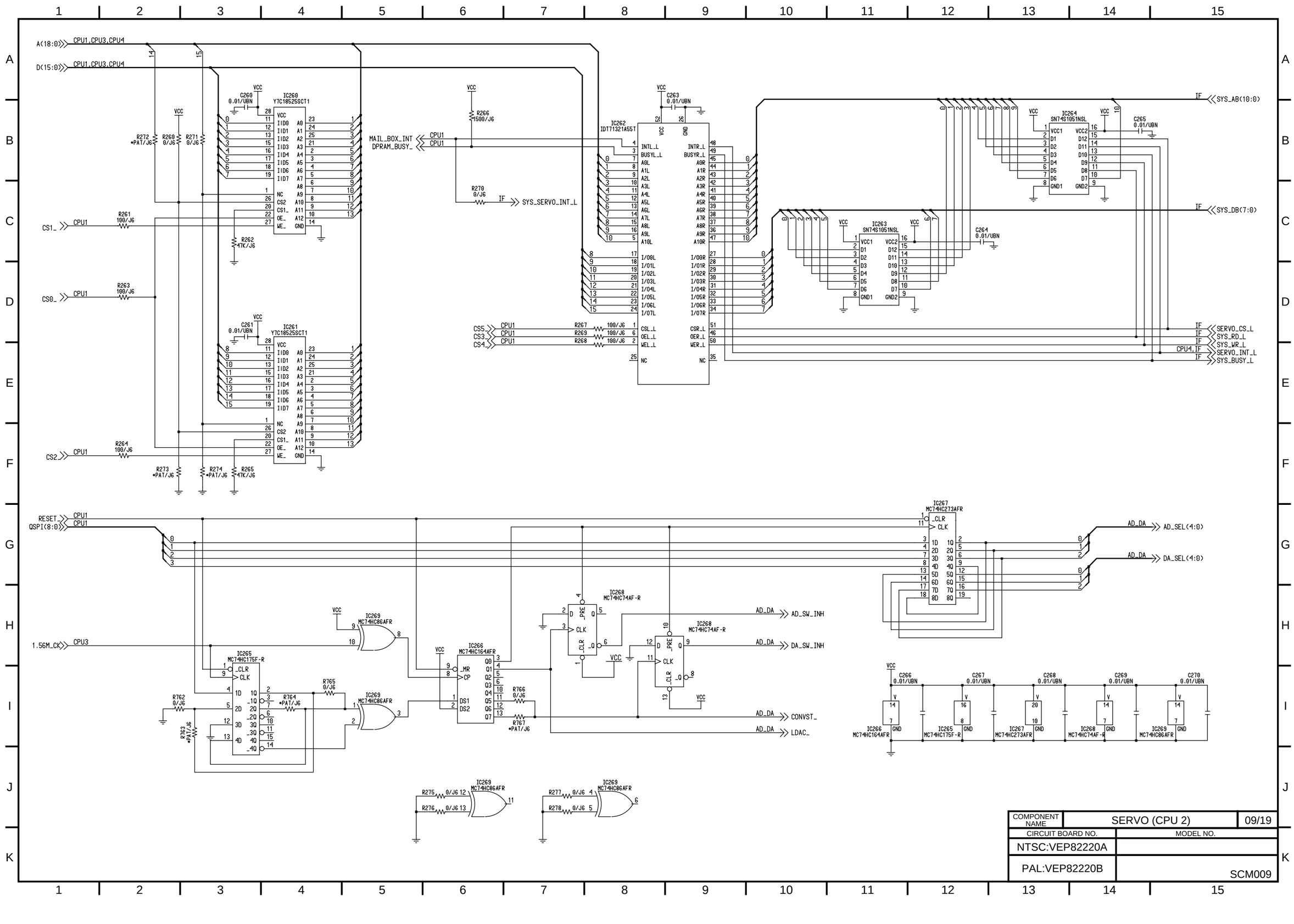
A(18:0) CPU1,CPU3,CPU4
D(15:0) CPU1,CPU3,CPU4
IC260 Y7C1852SSCT1
IC261 Y7C1852SSCT1
IC262 ID71321A55T
IC263 SN74S1051NSL
IC264 SN74S1051NSL
C260 0.01/UBN
C261 0.01/UBN
C263 0.01/UBN
C264 0.01/UBN
C265 0.01/UBN
R266 1500/J6
R270 0/J6
R272 *PAT/J6
R260 0/J6
R271 0/J6
R261 100/J6
R262 47K/J6
R263 100/J6
R264 100/J6
R273 *PAT/J6
R274 *PAT/J6
R265 47K/J6
MAIL_BOX_INT CPU1
DPRAM_BUSY_ CPU1
CS1_ CPU1
CS0_ CPU1
CS2_ CPU1
CS5_ CPU1
CS3_ CPU1
CS4 CPU1
R267 100/J6
R269 100/J6
R268 100/J6
IF SYS_SERVO_INT_L
IF SYS_AB(10:0)
IF SYS_DB(7:0)
IF SERVO_CS_L
IF SYS_RD_L
IF SYS_WR_L
CPU4,IF SERVO_INT_L
IF SYS_BUSY_L
RESET CPU1
QSPI(8:0) CPU1
1.56M_CK CPU3
IC265 MC74HC175F-R
IC266 MC74HC164AFR
IC267 MC74HC273AFR
IC268 MC74HC74AF-R
IC269 MC74HC86AFR
R762 0/J6
R763 *PAT/J6
R764 *PAT/J6
R765 0/J6
R766 0/J6
R767 *PAT/J6
R275 0/J6
R276 0/J6
R277 0/J6
R278 0/J6
AD_DA AD_SEL(4:0)
AD_DA DA_SEL(4:0)
AD_DA AD_SW_INH
AD_DA DA_SW_INH
AD_DA CONVST_
AD_DA LDAC_
C266 0.01/UBN
C267 0.01/UBN
C268 0.01/UBN
C269 0.01/UBN
C270 0.01/UBN
COMPONENT NAME
SERVO (CPU 2)
09/19
CIRCUIT BOARD NO.
MODEL NO.
NTSC:VEP82220A
PAL:VEP82220B
SCM009

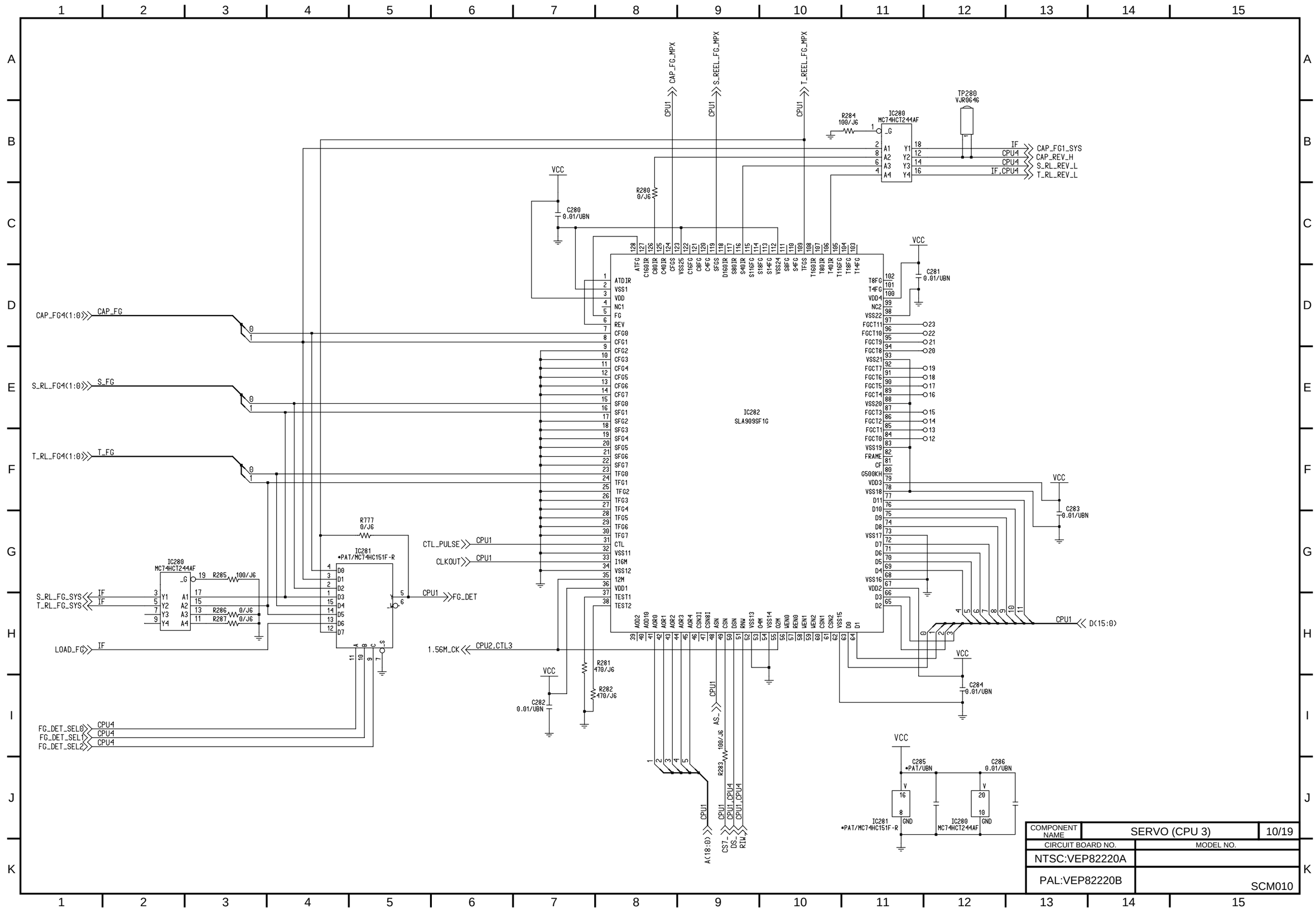
CAP_FG4(1:0)
S_RL_FG4(1:0)
T_RL_FG4(1:0)
LOAD_FG
FG_DET_SEL0
FG_DET_SEL1
FG_DET_SEL2
CTL_PULSE
CLKOUT
1.56M_CK
FG_DET
IC282
SLA9095F1G
IC280
MC74HCT244AF
IC281
*PAT/MC74HC151F-R
R284 100/J6
R280 0/J6
R777 0/J6
R285 100/J6
R286 0/J6
R287 0/J6
R281 470/J6
R282 470/J6
R283 100/J6
C280 0.01/UBN
C281 0.01/UBN
C282 0.01/UBN
C283 0.01/UBN
C284 0.01/UBN
C285 *PAT/UBN
C286 0.01/UBN
TP280 VJR0646
CAP_FG1_SYS
CAP_REV_H
S_RL_REV_L
T_RL_REV_L
D(15:0)
A(18:0)
COMPONENT NAME
SERVO (CPU 3)
10/19
CIRCUIT BOARD NO.
MODEL NO.
NTSC:VEP82220A
PAL:VEP82220B
SCM010

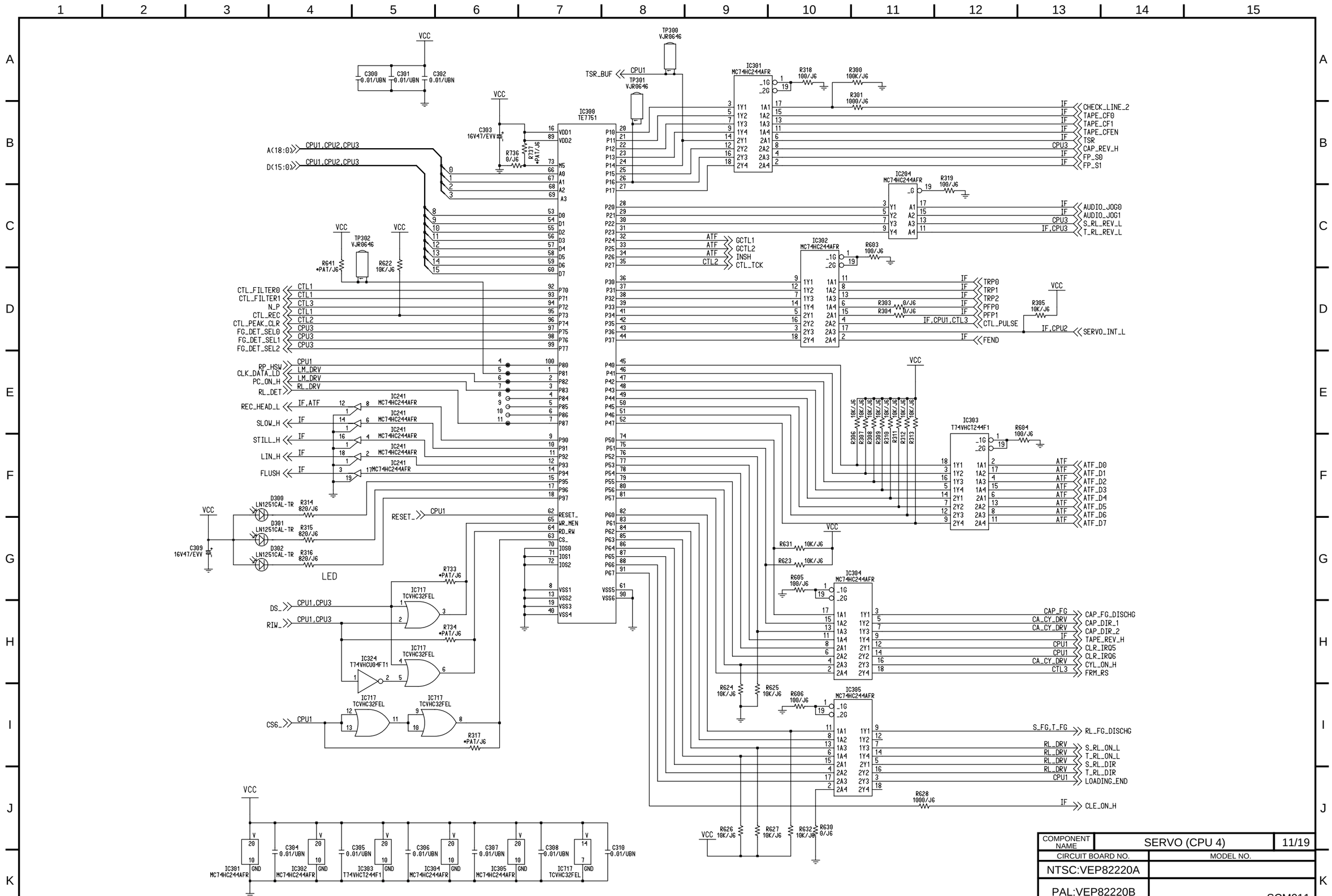

COMPONENT NAME	SERVO (CPU 4) 11/19
CIRCUIT BOARD NO.	MODEL NO.
NTSC:VEP82220A	
PAL:VEP82220B	SCM011

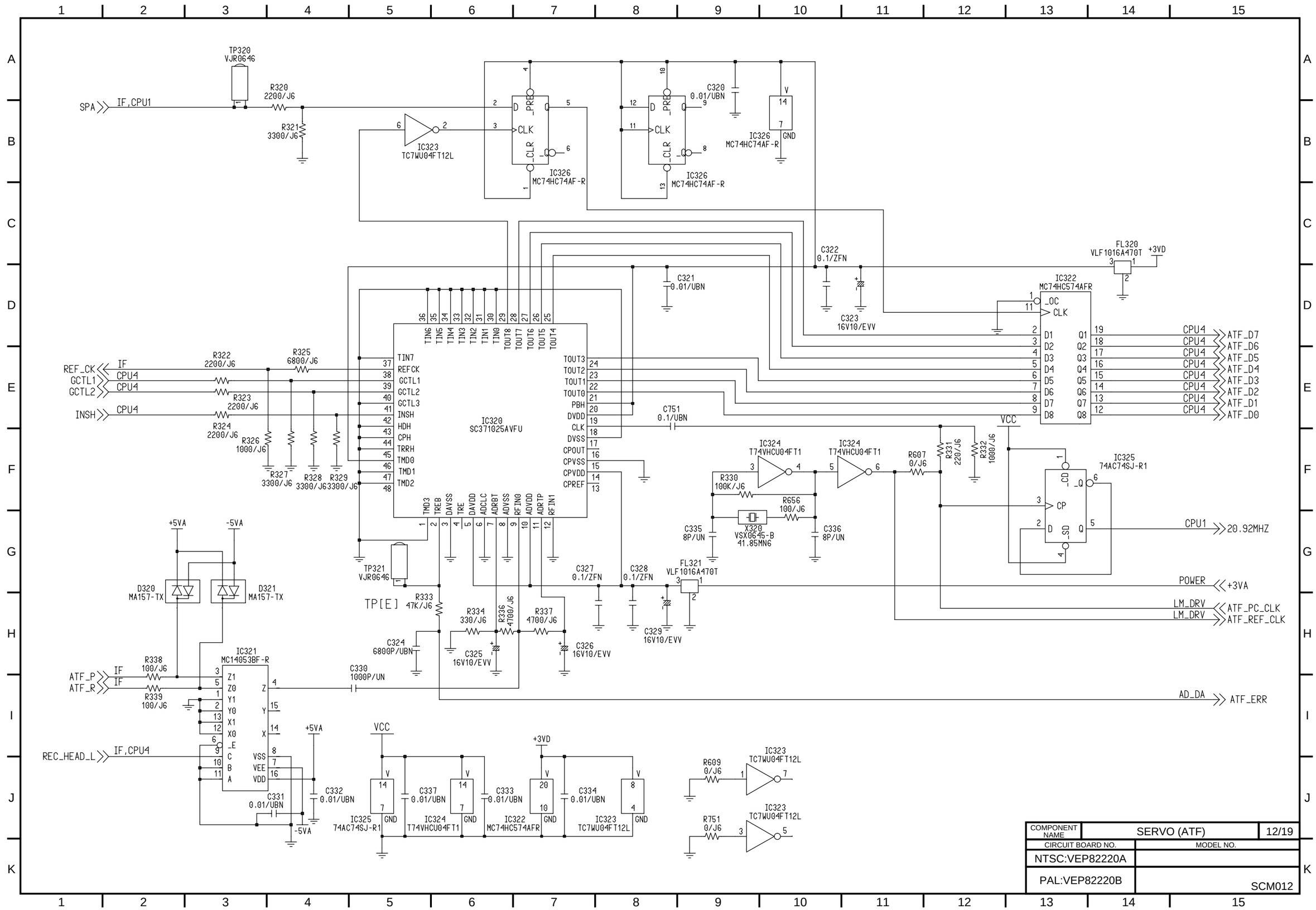

COMPONENT NAME	SERVO (ATF)	12/19
CIRCUIT BOARD NO.	MODEL NO.	
NTSC:VEP82220A		
PAL:VEP82220B		SCM012

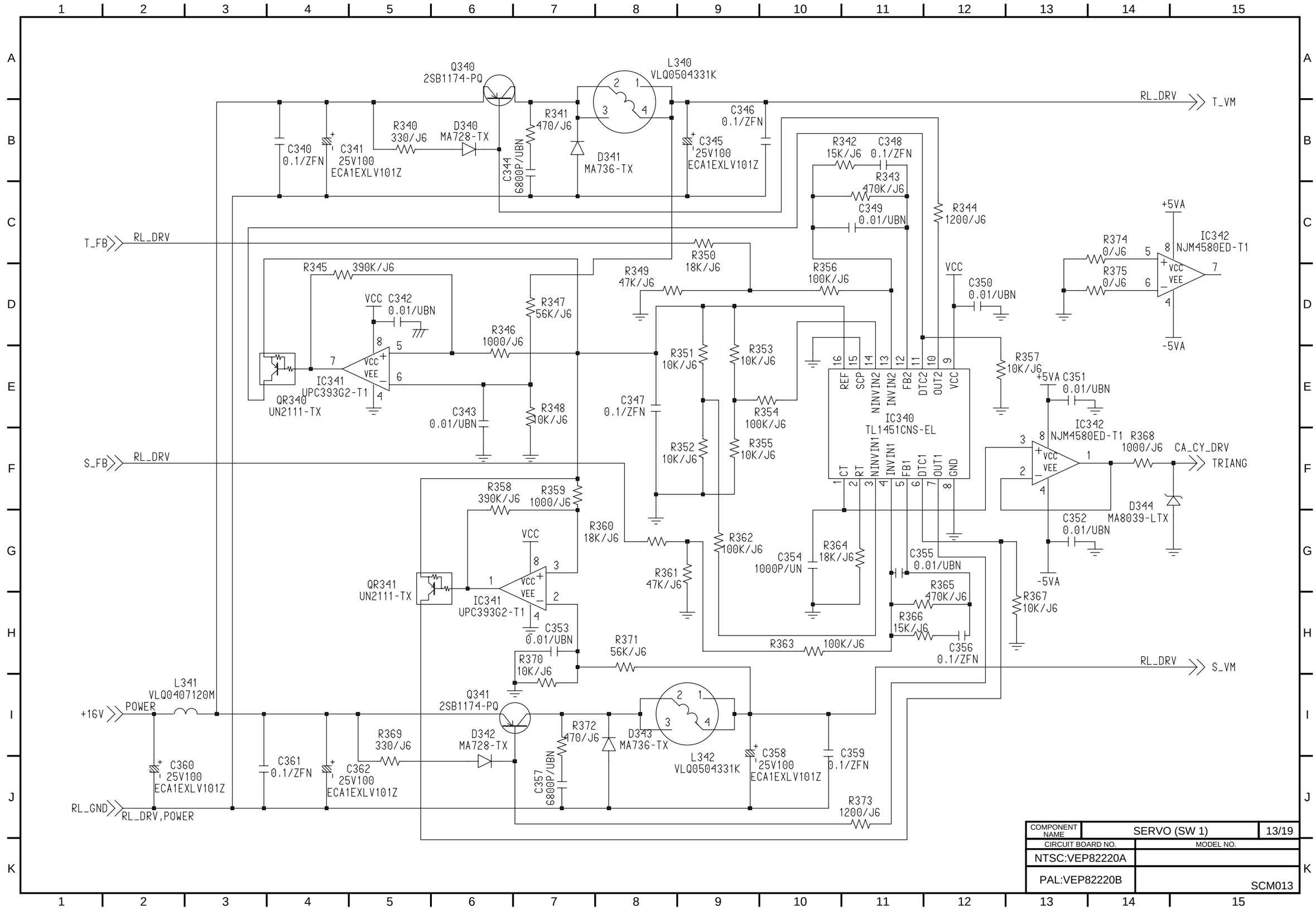
Q340
2SB1174-PQ
L340
VLQ0504331K
RL_DRV
T_VM
C340
0.1/ZFN
C341
25V100
ECA1EXLV101Z
R340
330/J6
D340
MA728-TX
C344
6800P/UBN
R341
470/J6
D341
MA736-TX
C345
25V100
ECA1EXLV101Z
C346
0.1/ZFN
R342
15K/J6
C348
0.1/ZFN
R343
470K/J6
C349
0.01/UBN
R344
1200/J6
T_FB
RL_DRV
R350
18K/J6
R345
390K/J6
R349
47K/J6
R356
100K/J6
VCC
C350
0.01/UBN
+5VA
IC342
NJM4580ED-T1
R374
0/J6
R375
0/J6
-5VA
VCC C342
0.01/UBN
R347
56K/J6
R346
1000/J6
QR340
UN2111-TX
IC341
UPC393G2-T1
C343
0.01/UBN
R348
10K/J6
R351
10K/J6
R353
10K/J6
C347
0.1/ZFN
R354
100K/J6
R352
10K/J6
R355
10K/J6
IC340
TL1451CNS-EL
REF
SCP
NINVIN2
INVIN2
FB2
DTC2
OUT2
VCC
CT
RT
NINVIN1
INVIN1
FB1
DTC1
OUT1
GND
R357
10K/J6
+5VA
C351
0.01/UBN
IC342
NJM4580ED-T1
R368
1000/J6
CA_CY_DRV
TRIANG
D344
MA8039-LTX
C352
0.01/UBN
-5VA
S_FB
RL_DRV
R358
390K/J6
R359
1000/J6
R360
18K/J6
R362
100K/J6
C354
1000P/UN
R364
18K/J6
C355
0.01/UBN
R365
470K/J6
R366
15K/J6
C356
0.1/ZFN
R367
10K/J6
R361
47K/J6
R363
100K/J6
VCC
QR341
UN2111-TX
IC341
UPC393G2-T1
C353
0.01/UBN
R370
10K/J6
R371
56K/J6
RL_DRV
S_VM
L341
VLQ0407120M
+16V
POWER
Q341
2SB1174-PQ
D342
MA728-TX
R369
330/J6
R372
470/J6
D343
MA736-TX
L342
VLQ0504331K
C358
25V100
ECA1EXLV101Z
C359
0.1/ZFN
C360
25V100
ECA1EXLV101Z
C361
0.1/ZFN
C362
25V100
ECA1EXLV101Z
C357
6800P/UBN
R373
1200/J6
RL_GND
RL_DRV,POWER
COMPONENT NAME
SERVO (SW 1)
13/19
CIRCUIT BOARD NO.
MODEL NO.
NTSC:VEP82220A
PAL:VEP82220B
SCM013

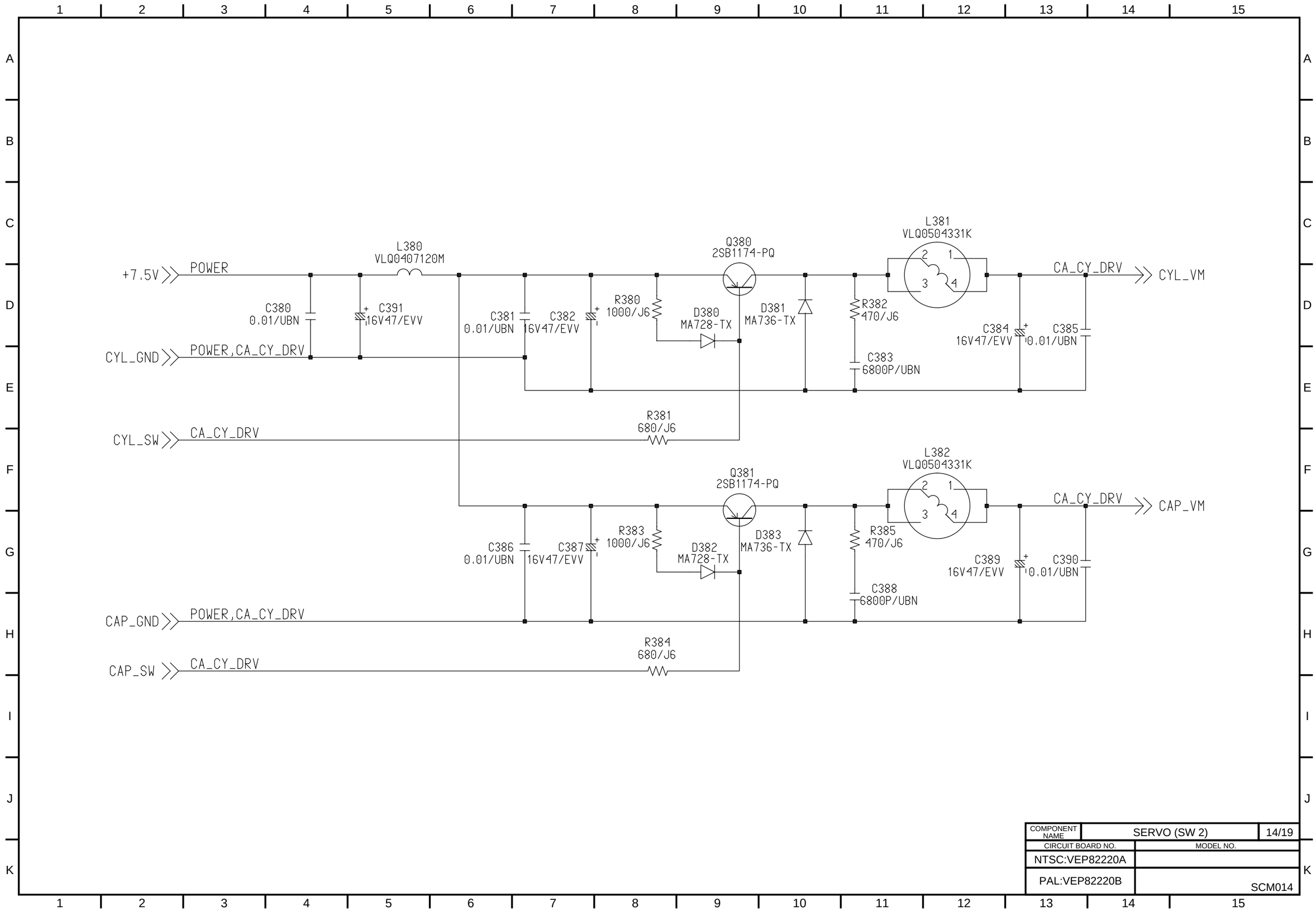

COMPONENT NAME	SERVO (SW 2)	14/19
CIRCUIT BOARD NO.	MODEL NO.	
NTSC:VEP82220A		
PAL:VEP82220B		SCM014

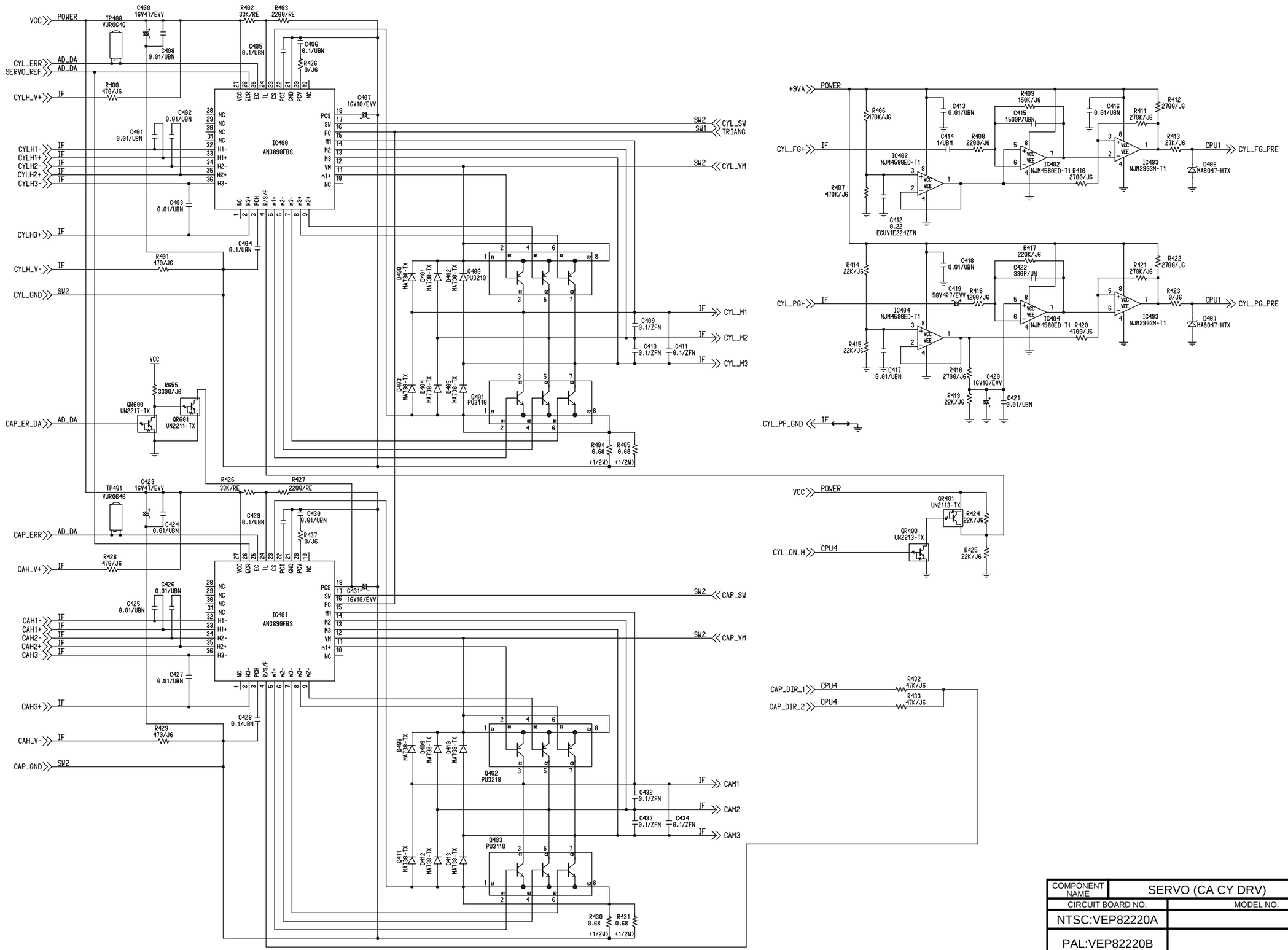

COMPONENT NAME	SERVO (CA CY DRV)
	15/19
CIRCUIT BOARD NO.	MODEL NO.
NTSC:VEP82220A	
PAL:VEP82220B	SCM015

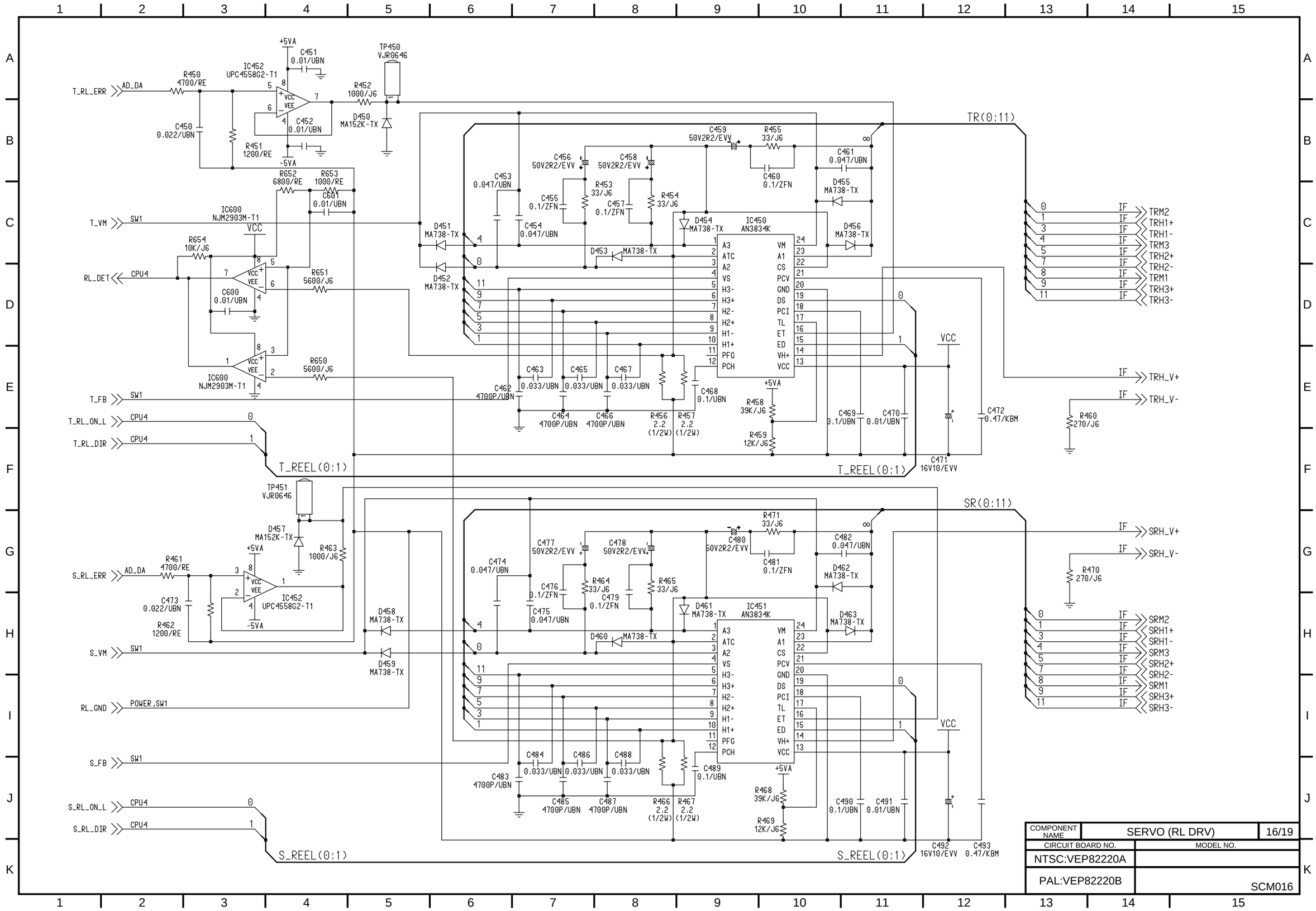

COMPONENT NAME	SERVO (RL DRV)	16/19
CIRCUIT BOARD NO.	MODEL NO.	
NTSC:VEP82220A		
PAL:VEP82220B		SCM016

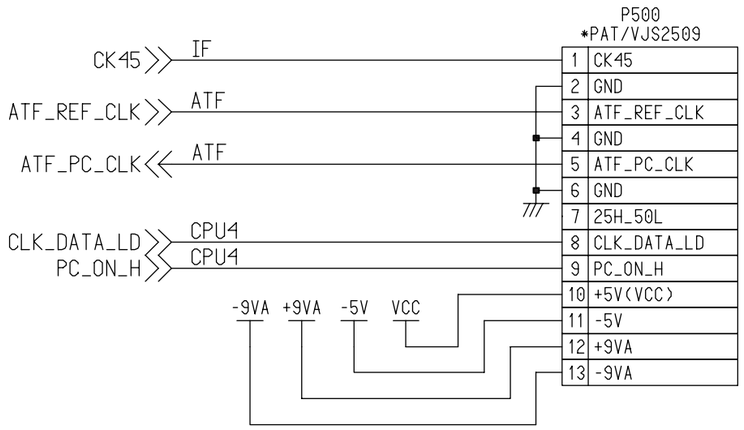

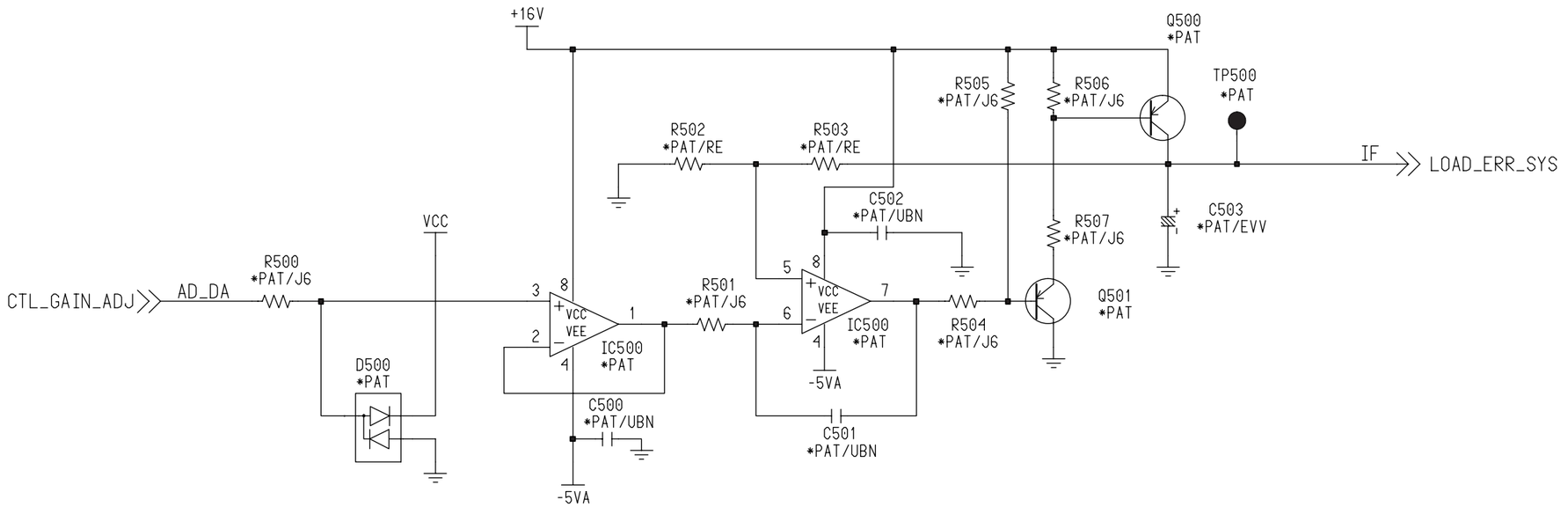

COMPONENT NAME	SERVO (LM DRV)	17/19
CIRCUIT BOARD NO.	MODEL NO.	
NTSC:VEP82220A		
PAL:VEP82220B		SCM017

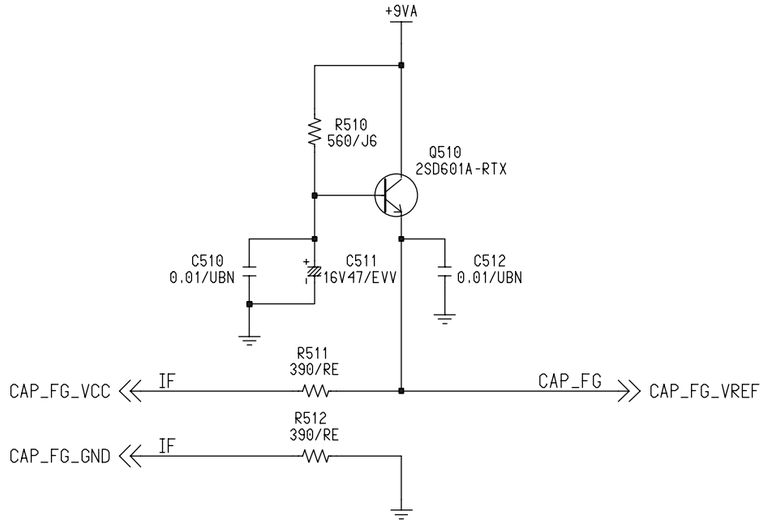

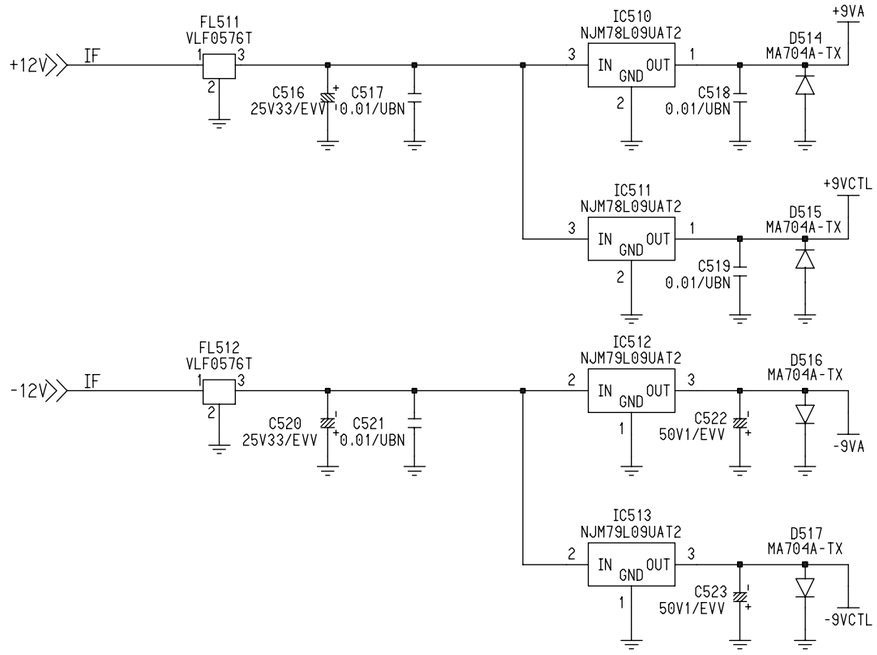

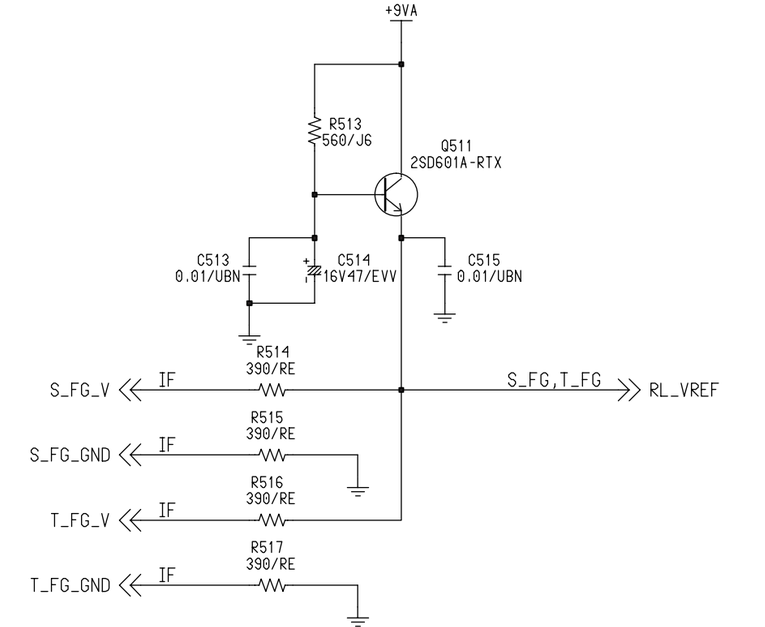

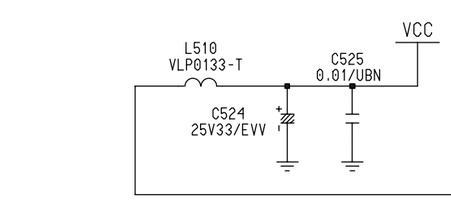

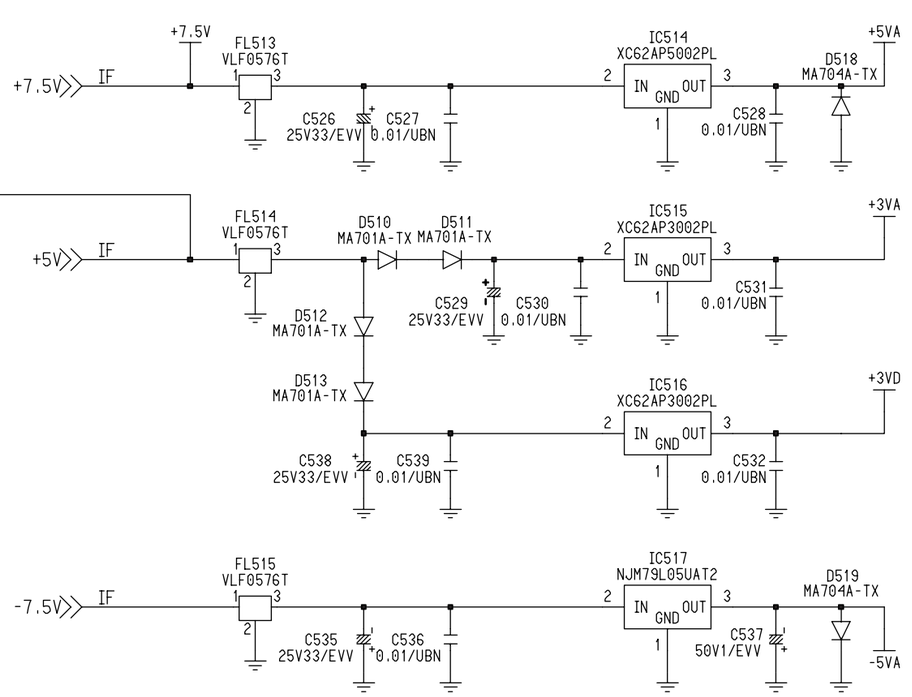

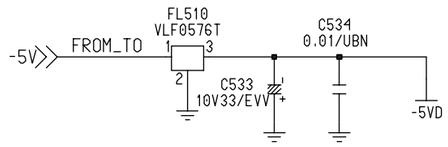

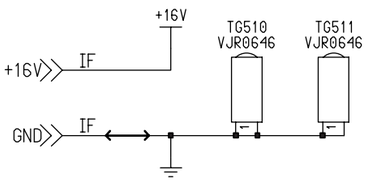

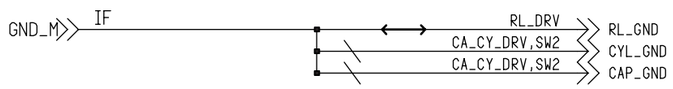

COMPONENT NAME	SERVO (POWER)	18/19
CIRCUIT BOARD NO.	MODEL NO.	
NTSC:VEP82220A		
PAL:VEP82220B	SCM018	

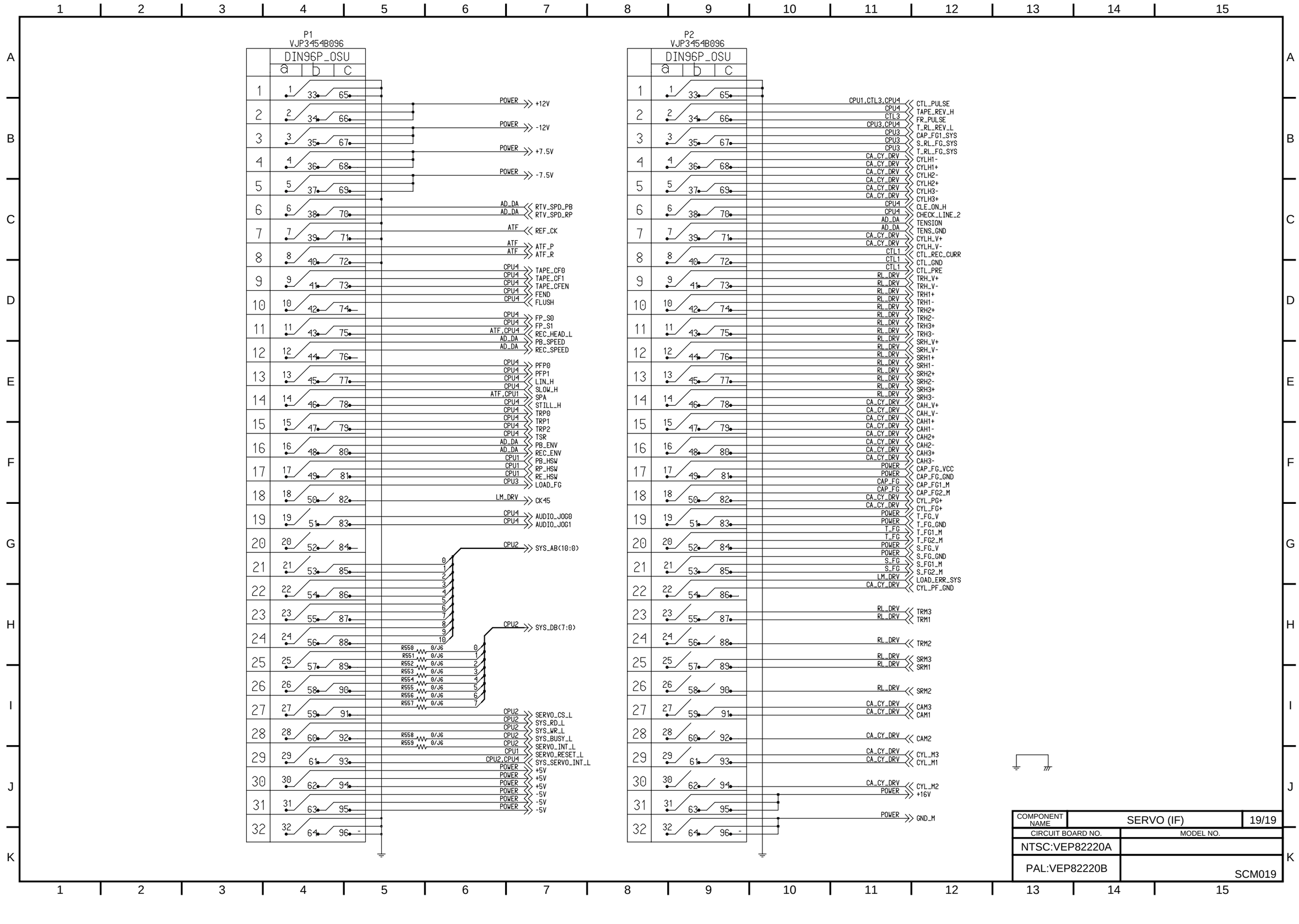
P1
VJP3454B096
DIN96P_OSU
a b c
POWER +12V
POWER -12V
POWER +7.5V
POWER -7.5V
AD_DA RTV_SPD_PB
AD_DA RTV_SPD_RP
ATF REF_CK
ATF ATF_P
ATF ATF_R
CPU4 TAPE_CF0
CPU4 TAPE_CF1
CPU4 TAPE_CFEN
CPU4 FEND
CPU4 FLUSH
CPU4 FP_S0
CPU4 FP_S1
ATF_CPU4 REC_HEAD_L
AD_DA PB_SPEED
AD_DA REC_SPEED
CPU4 PFP0
CPU4 PFP1
CPU4 LIN_H
CPU4 SLOW_H
ATF,CPU1 SPA
CPU4 STILL_H
CPU4 TRP0
CPU4 TRP1
CPU4 TRP2
CPU4 TSR
AD_DA PB_ENV
AD_DA REC_ENV
CPU1 PB_HSW
CPU1 RP_HSW
CPU1 RE_HSW
CPU3 LOAD_FG
LM_DRV CK45
CPU4 AUDIO_JOG0
CPU4 AUDIO_JOG1
CPU2 SYS_AB(10:0)
CPU2 SYS_DB(7:0)
R550 0/J6
R551 0/J6
R552 0/J6
R553 0/J6
R554 0/J6
R555 0/J6
R556 0/J6
R557 0/J6
CPU2 SERVO_CS_L
CPU2 SYS_RD_L
CPU2 SYS_WR_L
R558 0/J6
R559 0/J6
CPU2 SYS_BUSY_L
CPU2 SERVO_INT_L
CPU1 SERVO_RESET_L
CPU2,CPU4 SYS_SERVO_INT_L
POWER +5V
POWER +5V
POWER +5V
POWER -5V
POWER -5V
POWER -5V
P2
VJP3454B096
DIN96P_OSU
a b c
CPU1,CTL3,CPU4 CTL_PULSE
CPU4 TAPE_REV_H
CTL3 FR_PULSE
CPU3,CPU4 T_RL_REV_L
CPU3 CAP_FG1_SYS
CPU3 S_RL_FG_SYS
CPU3 T_RL_FG_SYS
CA_CY_DRV CYLH1-
CA_CY_DRV CYLH1+
CA_CY_DRV CYLH2-
CA_CY_DRV CYLH2+
CA_CY_DRV CYLH3-
CA_CY_DRV CYLH3+
CPU4 CLE_ON_H
CPU4 CHECK_LINE_2
AD_DA TENSION
AD_DA TENS_GND
CA_CY_DRV CYLH_V+
CA_CY_DRV CYLH_V-
CTL1 CTL_REC_CURR
CTL1 CTL_GND
CTL1 CTL_PRE
RL_DRV TRH_V+
RL_DRV TRH_V-
RL_DRV TRH1+
RL_DRV TRH1-
RL_DRV TRH2+
RL_DRV TRH2-
RL_DRV TRH3+
RL_DRV TRH3-
RL_DRV SRH_V+
RL_DRV SRH_V-
RL_DRV SRH1+
RL_DRV SRH1-
RL_DRV SRH2+
RL_DRV SRH2-
RL_DRV SRH3+
RL_DRV SRH3-
CA_CY_DRV CAH_V+
CA_CY_DRV CAH_V-
CA_CY_DRV CAH1+
CA_CY_DRV CAH1-
CA_CY_DRV CAH2+
CA_CY_DRV CAH2-
CA_CY_DRV CAH3+
CA_CY_DRV CAH3-
POWER CAP_FG_VCC
POWER CAP_FG_GND
CAP_FG CAP_FG1_M
CAP_FG CAP_FG2_M
CA_CY_DRV CYL_PG+
CA_CY_DRV CYL_FG+
POWER T_FG_V
POWER T_FG_GND
T_FG T_FG1_M
T_FG T_FG2_M
POWER S_FG_V
POWER S_FG_GND
S_FG S_FG1_M
S_FG S_FG2_M
LM_DRV LOAD_ERR_SYS
CA_CY_DRV CYL_PF_GND
RL_DRV TRM3
RL_DRV TRM1
RL_DRV TRM2
RL_DRV SRM3
RL_DRV SRM1
RL_DRV SRM2
CA_CY_DRV CAM3
CA_CY_DRV CAM1
CA_CY_DRV CAM2
CA_CY_DRV CYL_M3
CA_CY_DRV CYL_M1
CA_CY_DRV CYL_M2
POWER +16V
POWER GND_M
COMPONENT NAME
SERVO (IF)
19/19
CIRCUIT BOARD NO.
MODEL NO.
NTSC:VEP82220A
PAL:VEP82220B
SCM019

GENERAL

Power supply:	AC 120 V, 50 – 60 Hz
Power consumption:	210 W

Operating ambient temperature: 41°F to 104°F (5°C to 40°C)
Operating ambient humidity: 10% to 90% (no condensation)
Weight: 36.96 lbs (16.8 kg)
Dimensions (W × H × D): 16-3/4 × 6-15/16 × 16-3/8 inches
Recording format: DVCPRO format
Recording tracks: Digital video
Time code; Recorded in sub-code area
Digital audio; 2 channels
Cue Signal; 1 track
Control (CTL); 1 track
Tape speed: 33.820 mm/sec
Recording time: 184 minutes (with AJ-5P92LP)
66 minutes (with AJ-P66MP)
Tape: 1/4-inch thin magnetic layer metal tape
FF/REW time: Less than 3 minutes (with AJ-5P92LP)
Less than 2 minutes (with AJ-P66MP)
Editing accuracy: ±0 frame (using time code)
Tape timer accuracy: ±1 frame (using continuous CTL signal)
Servo lock time: Less than 0.5 sec.
(color framing/ standby ON)

VIDEO

(Digital video)

Sampling frequencies: Y; 13.5 MHz/P_B, P_R; 3.375 MHz
Quantizing: 8 bits
Error correction: Reed-Solomon product code

(Digital IN/analog component OUT)

Video bandwidth: Y; 30 Hz to 5.5 MHz (±0.5 dB)
5.75 MHz (–2 dB)
P_B, P_R; 30 Hz to 1.3 MHz (±1 dB)
1.5 MHz (–5 dB) typ.
S/N ratio: Better than 60 dB
K factor: Less than 1%

(Analog component IN/component OUT)

Video bandwidth: Y; 30 Hz to 5.5 MHz (±1 dB)
5.75 MHz (–3 dB)
P_B, P_R; 30 Hz to 1.3 MHz (±1 dB)
1.5 MHz (–6 dB) typ.
S/N ratio: Better than 55 dB
K factor: Less than 1%

(Analog composite IN/composite OUT)

Video bandwidth: Y; 30 Hz to 4.5 MHz (±1 dB)
DG: Less than 4%
DP: Less than 3°
Y/C delay: Better than 20 nsec
K factor: Less than 2%

(Video input connector)

Analog component input: BNC×3 (Y, P_B, P_R)
Y; 1.0 Vp-p, 75Ω
P_B, P_R; 0.486/0.7 Vp-p switchable, 75Ω
(75% color bar, 7.5% setup)
Analog composite input: BNC×2, loop-through, 75Ω on/off
Reference input: Analog composite
BNC×2, loop-through, 75Ω on/off
Serial digital component input (option): Complies with SMPTE 259M-C standard, BNC×2, active through

(Video output connector)

Analog component output: BNC×3 (Y, P_B, P_R)
Y; 1.0 Vp-p, 75Ω
P_B, P_R; 0.486/0.7 Vp-p switchable, 75Ω
(75% color bar, 7.5% setup)
Analog composite output: BNC×3
Video1/video2/video3 (superimpose on/off)
Serial digital component output (option): Complies with SMPTE 259M-C standard, BNC×3

(Video signals adjustment)

Composite video input signal: ±3 dB
Video output gain: ±3 dB
Video output chroma gain: ±3 dB
Video output hue: ±30°
Video output setup: ±15 IRE
Video output sync phase: ±15 µsec
Video output SC phase: ±180°
Video output Y/C delay: ±300 nsec

AUDIO

(Digital audio)

Sampling frequencies: 48 kHz
Quantizing: 16 bits
Frequency response: 20 Hz to 20 kHz ±1 dB
Dynamic range: Better than 90 dB (1 kHz, emphasis OFF, "A" weighted)
Distortion: Less than 0.05% (1 kHz, emphasis OFF, standard level)
Crosstalk: Less than –80 dB (1 kHz, between 2 channels)
Wow & flutter: Below measurable limit
Headroom: 20 dB
Emphasis: T1=50 µsec/T2=15 µsec (on/off selectable)

(Cue track)

Frequency response: 300 Hz to 6 kHz ±3 dB

(Audio input connector)

Analog input (CH1/CH2): XLR×2, 600Ω/high impedance selectable, +4/0/–20 dBu
Digital input (CH1/CH2): XLR×1, AES/EBU format
Serial digital input (option): Complies with SMPTE 259M-C, 272M standard (BNC, 75Ω)
Cue track input: XLR×1, 600Ω/high impedance selectable, +4/0/–20/–60 dBu

(Audio output connector)

Analog output (CH1/CH2): XLR×2, low impedance, +4/0/–20 dBu
Digital output (CH1/CH2): XLR×1, AES/EBU format
Serial digital output (option): Complies with SMPTE 259M-C, 272M standard (BNC, 75Ω)
Cue track output: XLR×1, low impedance, +4/0/–20 dBu
Monitor output: XLR×2, low impedance, +4/0/–20 dBu
Headphones: Variable level, mini-jack, 8Ω

Other input/output connector

Time code input: XLR×1, 0.5 to 8 Vp-p
Time code output: XLR×1, 2.0 Vp-p
RS-422A input/output: D-sub 9-pin, RS-422A interface
RS-422A output: D-sub 9-pin, RS-422A interface
RS-232C: D-sub 25-pin, RS-232C interface
Parallel input/output: D-sub 25-pin
Encoder remote: D-sub 15-pin

Weight and dimensions shown are approximately.
Specifications are subject to change without notice.

IMPORTANT
"Unauthorized recording of copyrighted television programs, video tapes and other materials may infringe the right of copyright owners and be contrary to copyright laws."

The lightning flash with arrowhead symbol, within an equilateral triangle, is intended to alert the user to the presence of uninsulated "dangerous voltage" within the product's enclosure that may be of sufficient magnitude to constitute a risk of electric shock to persons.

The exclamation point within an equilateral triangle is intended to alert the user to the presence of important operating and maintenance (servicing) instructions in the literature accompanying the appliance.

CAUTION:
To reduce the risk of fire or shock hazard and annoying interference, use the recommended accessories only.

WARNING:
To reduce the risk of fire or shock hazard, do not expose this equipment to rain or moisture.

CAUTION:
TO REDUCE THE RISK OF FIRE OR SHOCK HAZARD, REFER MOUNTING OF THE OPTIONAL INTERFACE BOARD TO AUTHORIZED SERVICE PERSONNEL.

FCC Note:
This device complies with Part 15 of the FCC Rules. To assure continued compliance follow the attached installation instructions and do not make any unauthorized modifications.

This equipment has been tested and found to comply with the limits for a Class A digital device, pursuant to Part 15 of the FCC Rules. These limits are designed to provide reasonable protection against harmful interference when the equipment is operated in a commercial environment. This equipment generates, uses, and can radiate radio frequency energy and, if not installed and used in accordance with the instruction manual, may cause harmful interference to radio communications. Operation of this equipment in a residential area is likely to cause harmful interference in which case the user will be required to correct the interference at his own expense.

☐ is the safety information.

- Do not insert fingers or any objects into the video casette holder.
- Avoid operating or leaving the unit near strong magnetic fields. Be especially careful of large audio speakers.
- Avoid operating or storing the unit in an excessively hot, cold, or damp environment as this may result in damage both to the recorder and to the tape.
- Do not spray any cleaner or wax directly on the unit.
- If the unit is not going to be used for a length of time, protect it from dirt and dust.
- Do not leave a cassette in the recorder when not in use.
- Do not block the ventilation slots of the unit.
- Use this unit horizontally and do not place anything on the top panel.
- Cassette tape can be used only for one-side, one direction recording. Two-way or two-track recordings cannot be made.
- Cassette tape can be used for either Color or Black & White recording.
- Do not attempt to disassemble the recorder. There are no user serviceable parts inside.
- If any liquid spills inside the recorder, have the recorder examined for possible damage.
- Refer any needed servicing to authorized service personnel.

GENERAL

Power supply:	AC 220 – 240 V, 50 – 60 Hz
Power consumption:	210 W

Operating ambient temperature: 5°C to 40°C (41°F to 104°F)
Operating ambient humidity: 10% to 90% (no condensation)
Weight: 16.8 kg
Dimensions (W × H × D): 424 × 175 × 415 mm
Recording format: DVCPRO format
Recording tracks: Digital video
Time code; Recorded in sub-code area
Digital audio; 2 channels
Cue signal; 1 track
Control (CTL); 1 track
Tape speed: 33.854 mm/sec
Tape: 1/4-inch thin magnetic layer metal tape
Editing accuracy: ±0 frame (using time code)
Tape timer accuracy: ±1 frame (using continuous CTL signal)
Servo lock time: Less than 0.5 sec. (colour framing/standby ON)

VIDEO

(Digital video)

Sampling frequencies: Y; 13.5 MHz/P_B, P_R; 3.375 MHz
Quantizing: 8 bits
Error correction: Reed-Solomon product code

(Digital IN/analogue component OUT)

Video bandwidth: Y; 25 Hz to 5.5 MHz (±0.5 dB)
5.75 MHz (–2 dB)
P_B, P_R; 25 Hz to 1.3 MHz (±1 dB)
1.5 MHz (–5 dB) typ.
S/N ratio: Better than 60 dB
K factor: Less than 1%

(Analogue component IN/component OUT)

Video bandwidth: Y; 25 Hz to 5.5 MHz (±1 dB)
5.75 MHz (–3 dB)
P_B, P_R; 25 Hz to 1.3 MHz (±1 dB)
1.5 MHz (–6 dB) typ.
S/N ratio: Better than 55 dB
K factor: Less than 1%

(Analogue composite IN/composite OUT)

Video bandwidth: Y; 25 Hz to 5.5 MHz (±1 dB) typ.
DG: Less than 4%
DP: Less than 3°
Y/C delay: Better than 20 nsec
K factor: Less than 2.5%

(Video input connector)

Analogue component input: BNC×3 (Y, P_B, P_R)
Y; 1.0 Vp-p, 75Ω
P_B, P_R; 0.7 Vp-p, 75Ω
(100% colour bar)
Analogue composite input: BNC×2, loop-through, 75Ω on/off
Reference input: Analogue composite
BNC×2, loop-through, 75Ω on/off
Serial digital component input (option): Complies with EBU Tech. 3267-E standard, BNC×2, active through

(Video output connector)

Analogue component output: BNC×3 (Y, P_B, P_R)
Y; 1.0 Vp-p, 75Ω
P_B, P_R; 0.7 Vp-p, 75Ω
(100% colour bar)
Analogue composite output: BNC×3
Video1/video2/video3 (superimpose on/off)
Serial digital component output (option): Complies with EBU Tech. 3267-E standard, BNC×3

(Video signals adjustment)

Composite video input signal: ±3 dB
Video output gain: ±3 dB
Video output chroma gain: ±3 dB
Video output chroma phase: ±30°
Video output black level: ±100 mV
Video output sync phase: ±15 µsec
Video output SC phase: ±180°
Video output Y/C delay: ±300 nsec

AUDIO

(Digital audio)

Sampling frequencies: 48 kHz
Quantizing: 16 bits
Frequency response: 20 Hz to 20 kHz ±1 dB
Dynamic range: Better than 90 dB (1 kHz, emphasis OFF, "A" weighted)
Distortion: Less than 0.05% (1 kHz, emphasis OFF, standard level)
Crosstalk: Less than –80 dB (1 kHz, between 2 channels)
Wow & flutter: Below measurable limit
Headroom: 18 dB
Emphasis: T1=50 µsec/T2=15 µsec (on/off selectable)

(Cue track)

Frequency response: 300 Hz to 6 kHz ±3 dB

(Audio input connector)

Analogue input (CH1/CH2): XLR×2, 600Ω/high impedance selectable, +4/0/–20 dBu
Digital input (CH1/CH2): XLR×1, AES/EBU format
Serial digital input (option): Complies with EBU Tech. 3267-E standard (BNC, 75Ω)
Cue track input: XLR×1, 600Ω/high impedance selectable, +4/0/–20/–60 dBu

(Audio output connector)

Analogue output (CH1/CH2): XLR×2, low impedance, +4/0/–20 dBu
Digital output (CH1/CH2): XLR×1, AES/EBU format
Serial digital output (option): Complies with EBU Tech. 3267-E standard (BNC, 75Ω)
Cue track output: XLR×1, low impedance, +4/0/–20 dBu
Monitor output: XLR×2, low impedance, +4/0/–20 dBu
Headphones: Variable level, mini-jack, 8Ω

Other input/output connector

Time code input: XLR×1, 0.5 to 8 Vp-p
Time code output: XLR×1, 2.0 Vp-p
RS-422A input/output: D-sub 9-pin, RS-422A interface
RS-422A output: D-sub 9-pin, RS-422A interface
RS-232C: D-sub 25-pin, RS-232C interface
Parallel input/output: D-sub 25-pin
Encoder remote: D-sub 15-pin

Weight and dimensions shown are approximately.
Specifications are subject to change without notice.

IMPORTANT

"Unauthorized recording of copyrighted television programmes, video tapes and other materials may infringe the right of copyright owners and be contrary to copyright laws."

ENGLISH

■ **THIS APPARATUS MUST BE EARTHED**

To ensure safe operation the three-pin plug must be inserted only into a standard three-pin power point which is effectively earthed through the normal house-hold wiring.

Extension cords used with the equipment must be three-core and be correctly wired to provide connection to earth. Wrongly wired extension cords are a major cause of fatalities.

The fact that the equipment operates satisfactorily does not imply that the power point is earthed and that the installation is completely safe. For your safety, if in any doubt about the effective earthing of the power point, consult a qualified electrician.

■ **DO NOT REMOVE PANEL COVER BY UNSCREWING**

To reduce the risk of electric shock, do not remove cover. No user serviceable parts inside. And do not insert fingers or any other objects into the video cassette holder.

CAUTION:

Do not install or place this unit in a bookcase, built in cabinet or in another confined space in order to keep well ventilated condition. Ensure that curtains and any other materials do not obstruct the ventilation condition to prevent risk of electric shock or fire hazard due to overheating.

WARNING:

TO REDUCE THE RISK OF FIRE OR SHOCK HAZARD, DO NOT EXPOSE THIS EQUIPMENT TO RAIN OR MOISTURE.

CAUTION:

TO REDUCE THE RISK OF FIRE OR SHOCK HAZARD, AND ANNOYING INTERFERENCE, USE THE RECOMMENDED ACCESSOIRES ONLY.

CAUTION:

To reduce the risk of fire or shock hazard, refer change of switch setting inside the unit to qualified service personnel.

Operating precaution

Operation near any appliance which generates strong magnetic fields may give rise to noise in the video and audio singals. If this should be the case, deal with the situation by, for instance, moving the source of the magnetic fields away from the unit before operation.

☐ is the safety information.

Attention/Attentie

- This apparatus contains a lithium battery for memory back-up.
- For the removal of the battery at the moment of the disposal at the end of the service life please consult your dealer.
- Do not throw away the battery. Instead, hand it in as hazardous waste.

- Dit apparaat bevat een lithiumbatterij voor memory back-up.
- Raadpleeg uw leverancier over de verwijdering van de batterij op het moment dat u het apparaat bij einde levensduur afdankt.
- Gooi de batterij niet weg, maar lever hem in als KCA.

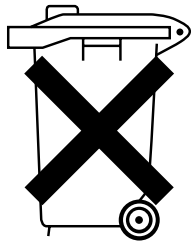

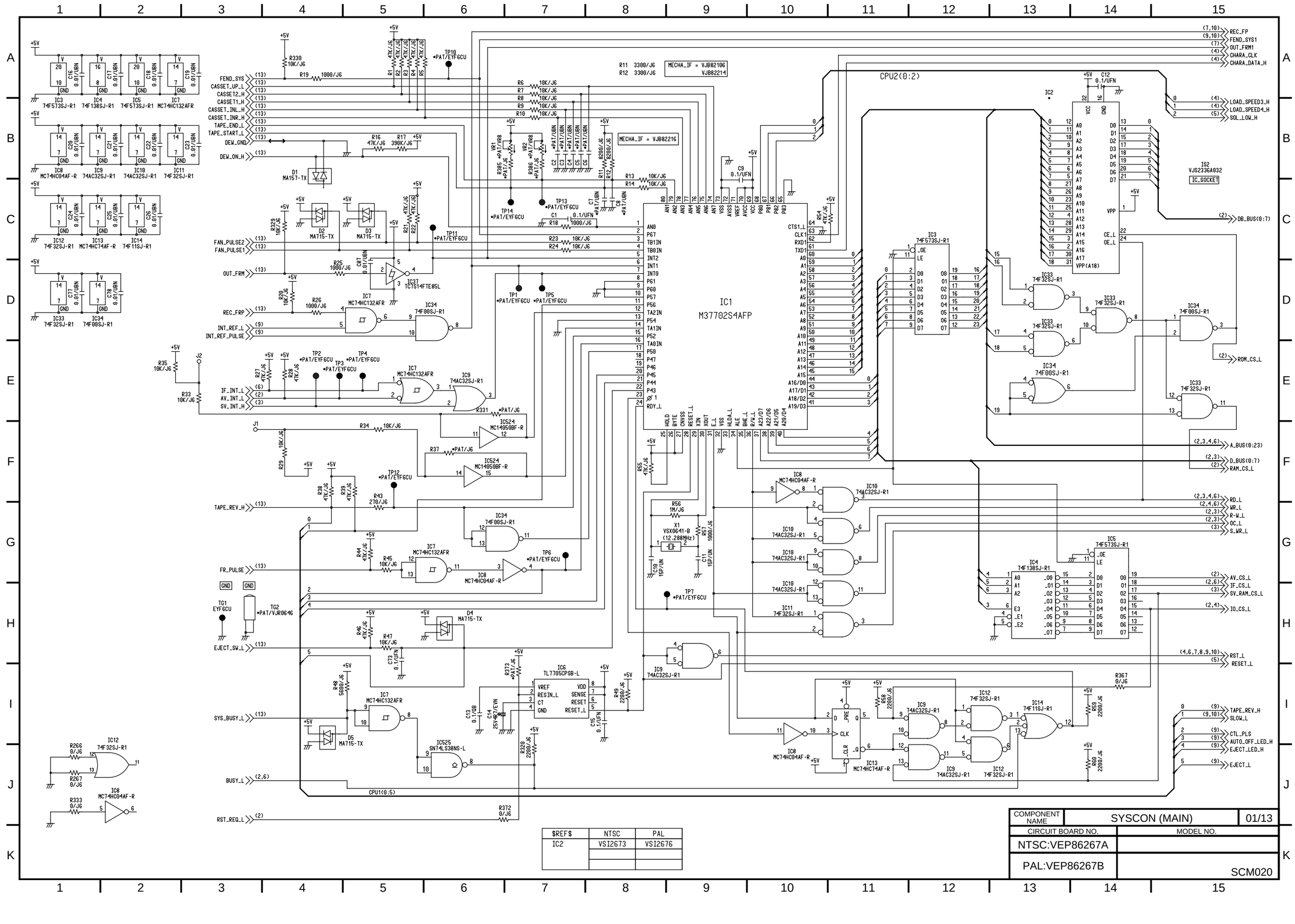

REF	NTSC	PAL
IC2	VSI2673	VSI2676

COMPONENT NAME	SYSCON (MAIN)	01/13
CIRCUIT BOARD NO.		MODEL NO.
NTSC:VEP86267A		
PAL:VEP86267B		SCM020

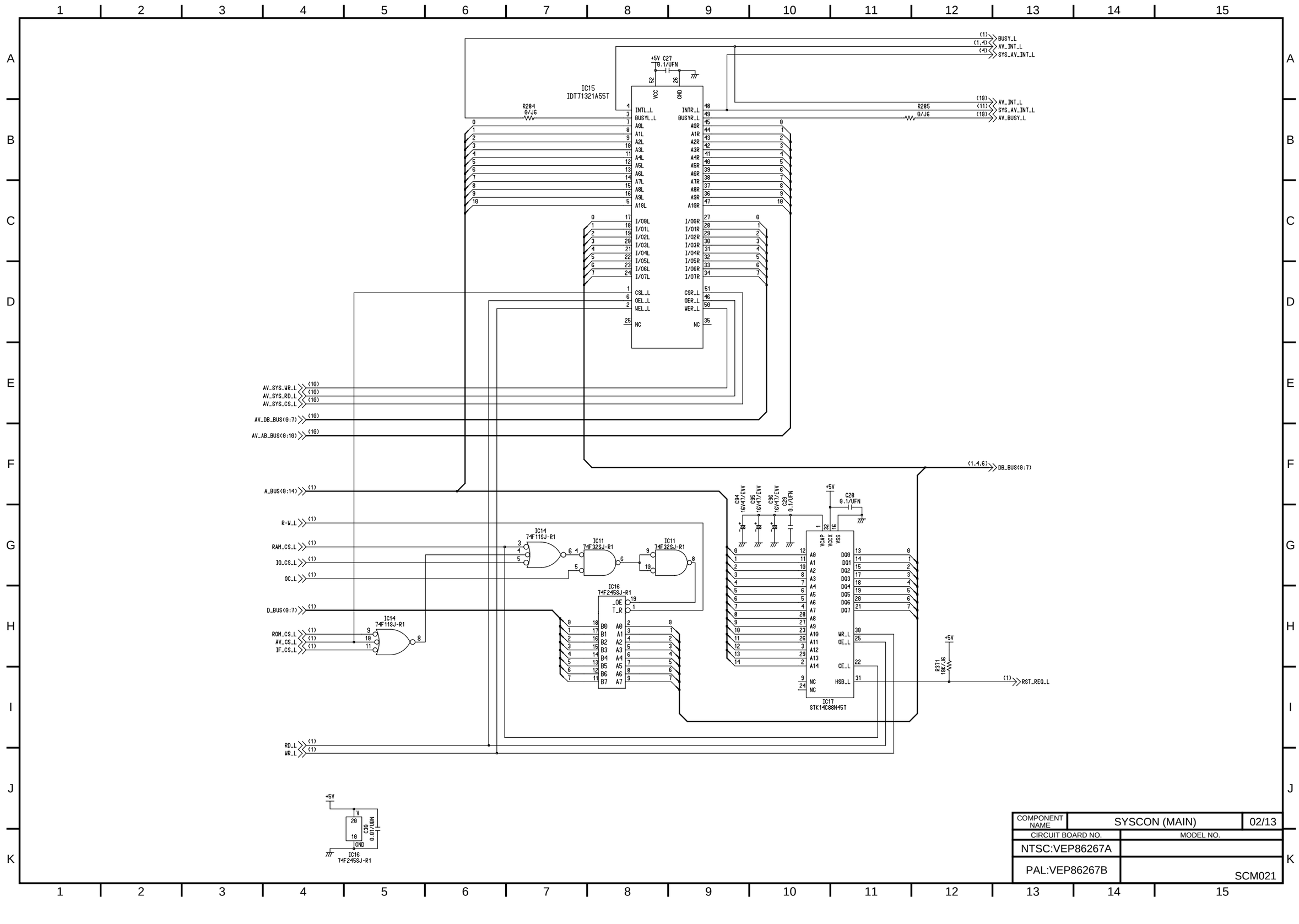

COMPONENT NAME	SYSCON (MAIN)	02/13
CIRCUIT BOARD NO.	MODEL NO.	
NTSC:VEP86267A		
PAL:VEP86267B		SCM021

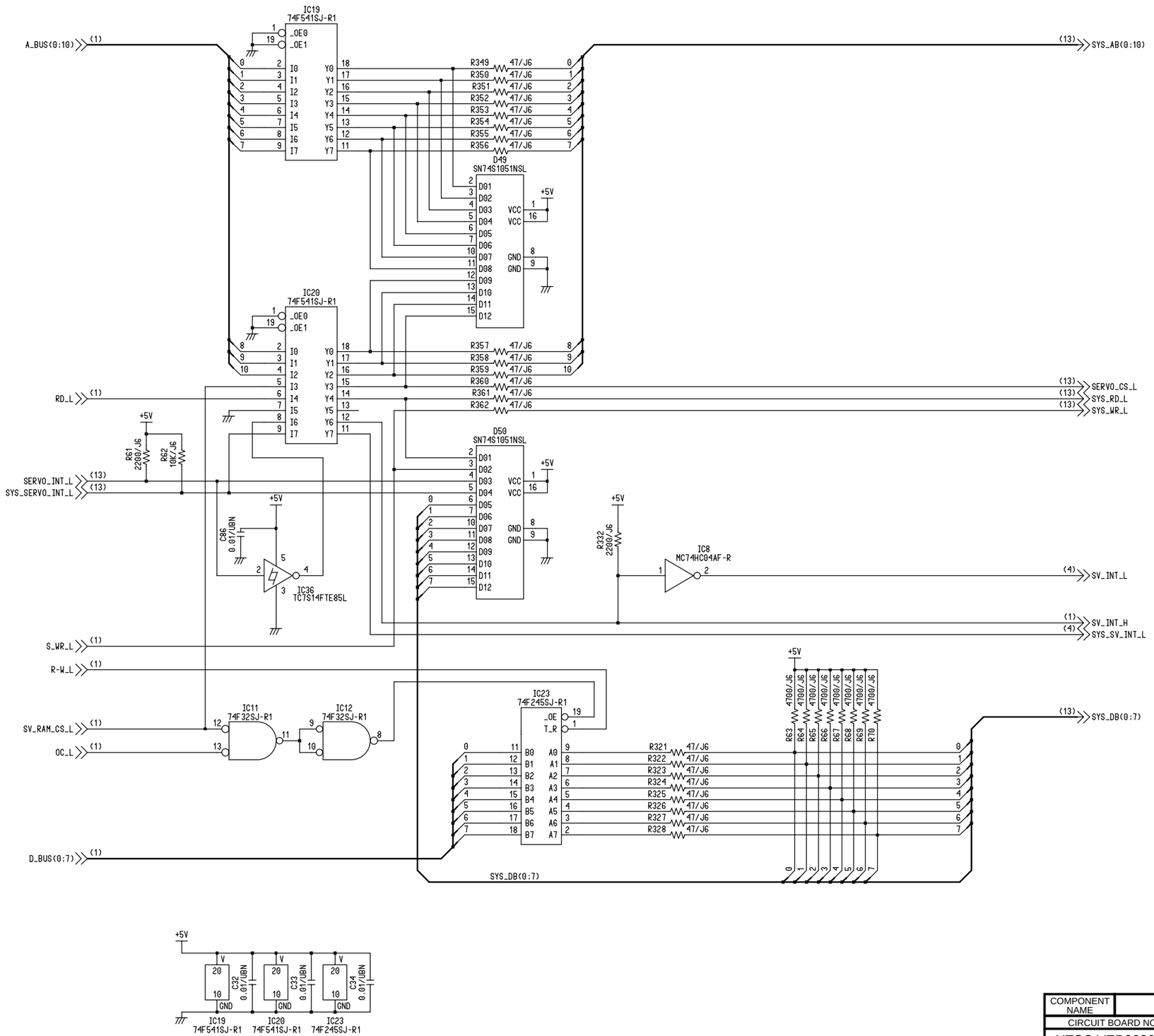

COMPONENT NAME	SYSCON (MAIN)	03/13
CIRCUIT BOARD NO.	MODEL NO.	
NTSC:VEP86267A		
PAL:VEP86267B		SCM022

COMPONENT NAME	SYSCON (MAIN)	04/13
CIRCUIT BOARD NO.		MODEL NO.
NTSC:VEP86267A		
PAL:VEP86267B		SCM023

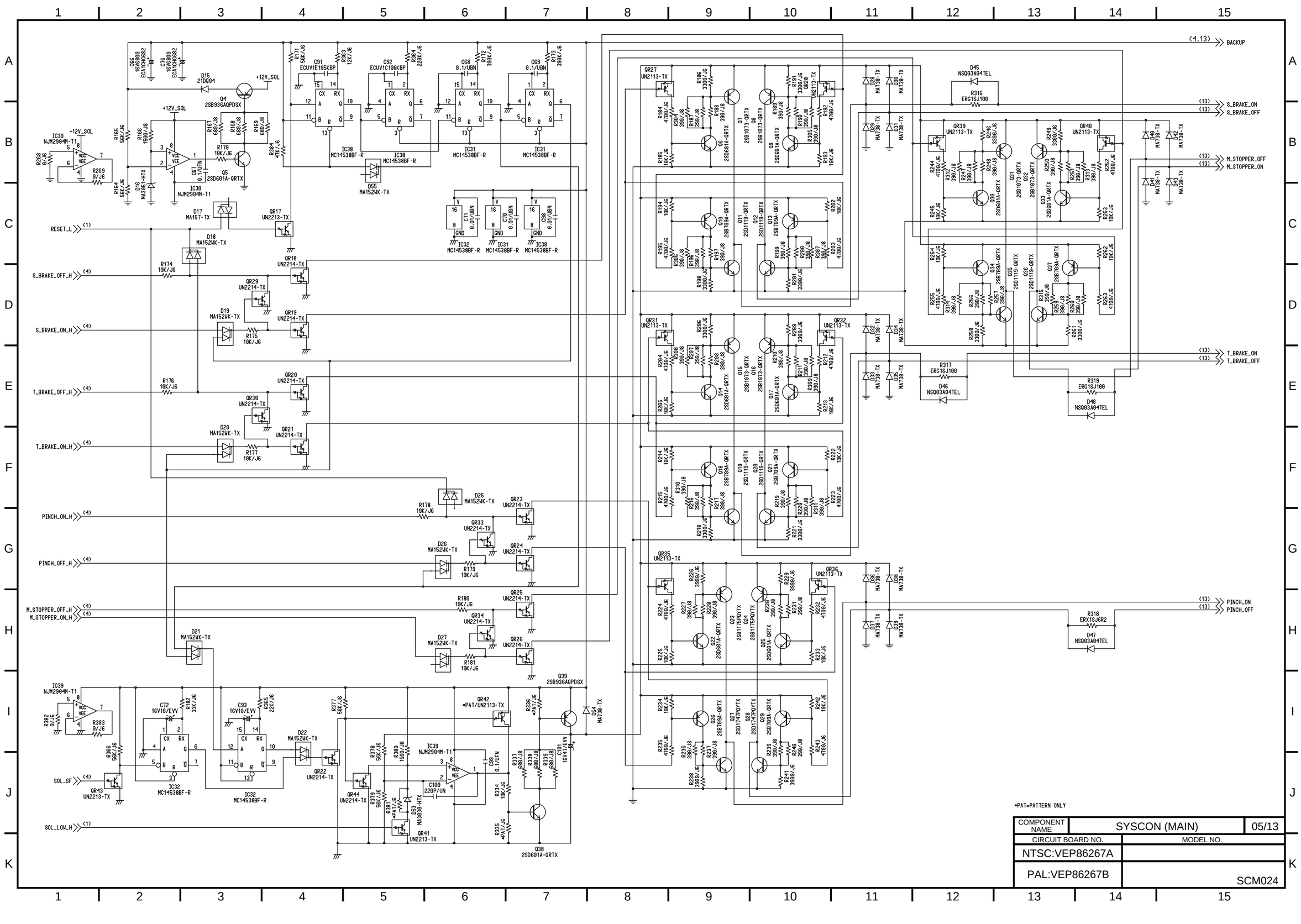
(4,13) BACKUP
(13) S_BRAKE_ON
(13) S_BRAKE_OFF
(13) M_STOPPER_OFF
(13) M_STOPPER_ON
(13) T_BRAKE_ON
(13) T_BRAKE_OFF
(13) PINCH_ON
(13) PINCH_OFF
RESET_L (1)
S_BRAKE_OFF_H (4)
S_BRAKE_ON_H (4)
T_BRAKE_OFF_H (4)
T_BRAKE_ON_H (4)
PINCH_ON_H (4)
PINCH_OFF_H (4)
M_STOPPER_OFF_H (4)
M_STOPPER_ON_H (4)
SOL_SF (4)
SOL_LOW_H (1)
+12V_SOL
IC39 NJM2904M-T1
IC30 NJM2904M-T1
IC38 MC14538BF-R
IC31 MC14538BF-R
IC32 MC14538BF-R
D55 MA152WK-TX
Q4 2SB936AQPDSX
Q5 2SD601A-QRTX
Q38 2SD601A-QRTX
Q39 2SB936AQPDSX
D15 MA3051-HTX
D52 MA3039-HTX
D54 MA738-TX
D45 NSQ03A04TEL
D46 NSQ03A04TEL
D47 NSQ03A04TEL
D48 NSQ03A04TEL
R316 ERG1SJ100
R317 ERG1SJ100
R318 ERX1SJ6R2
R319 ERG1SJ100
•PAT=PATTERN ONLY
COMPONENT NAME
SYSCON (MAIN)
05/13
CIRCUIT BOARD NO.
MODEL NO.
NTSC:VEP86267A
PAL:VEP86267B
SCM024

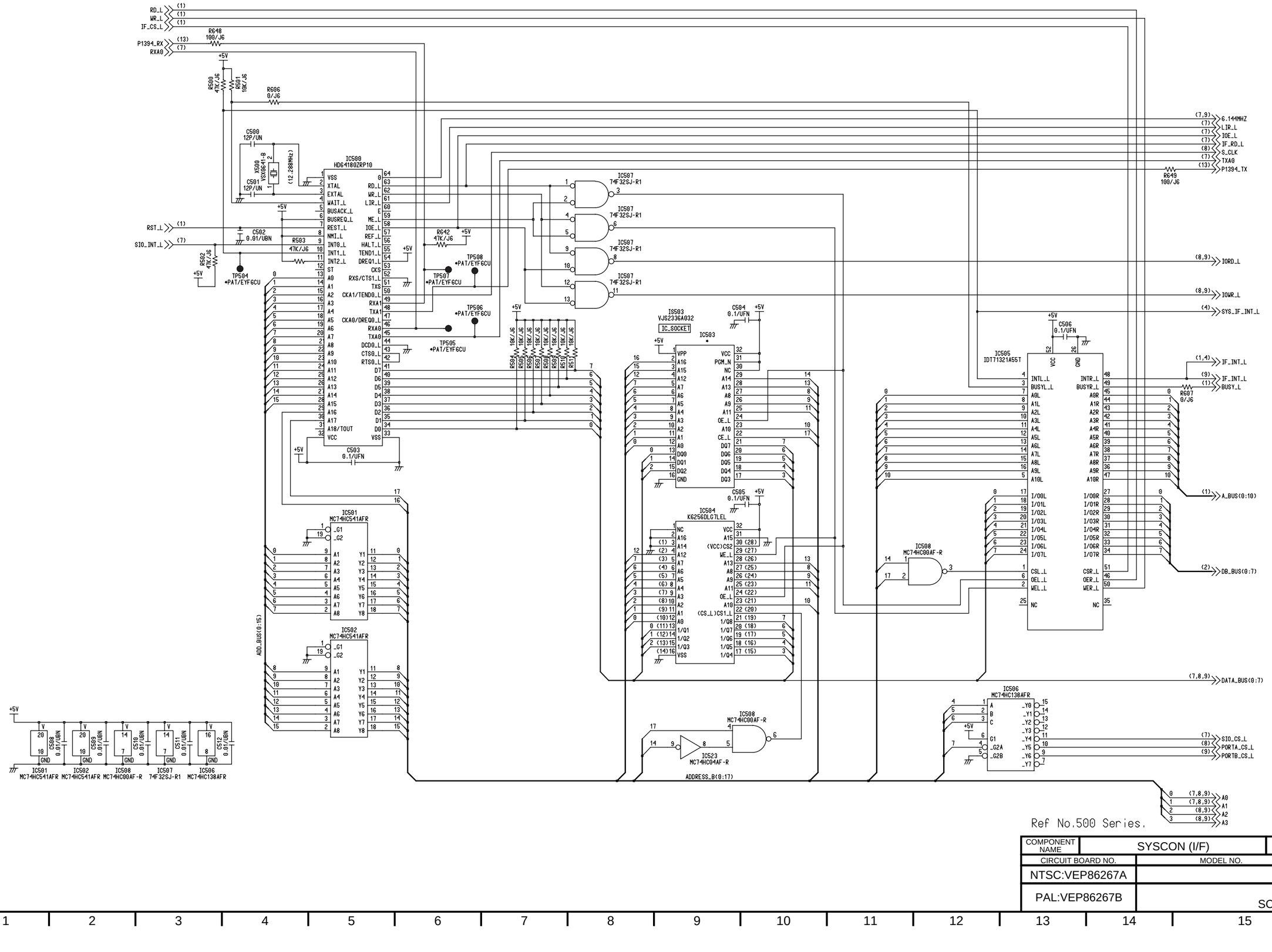

Ref No.500 Series.

COMPONENT NAME	SYSCON (I/F)	06/13
CIRCUIT BOARD NO.	MODEL NO.	
NTSC:VEP86267A		
PAL:VEP86267B	SCM025	

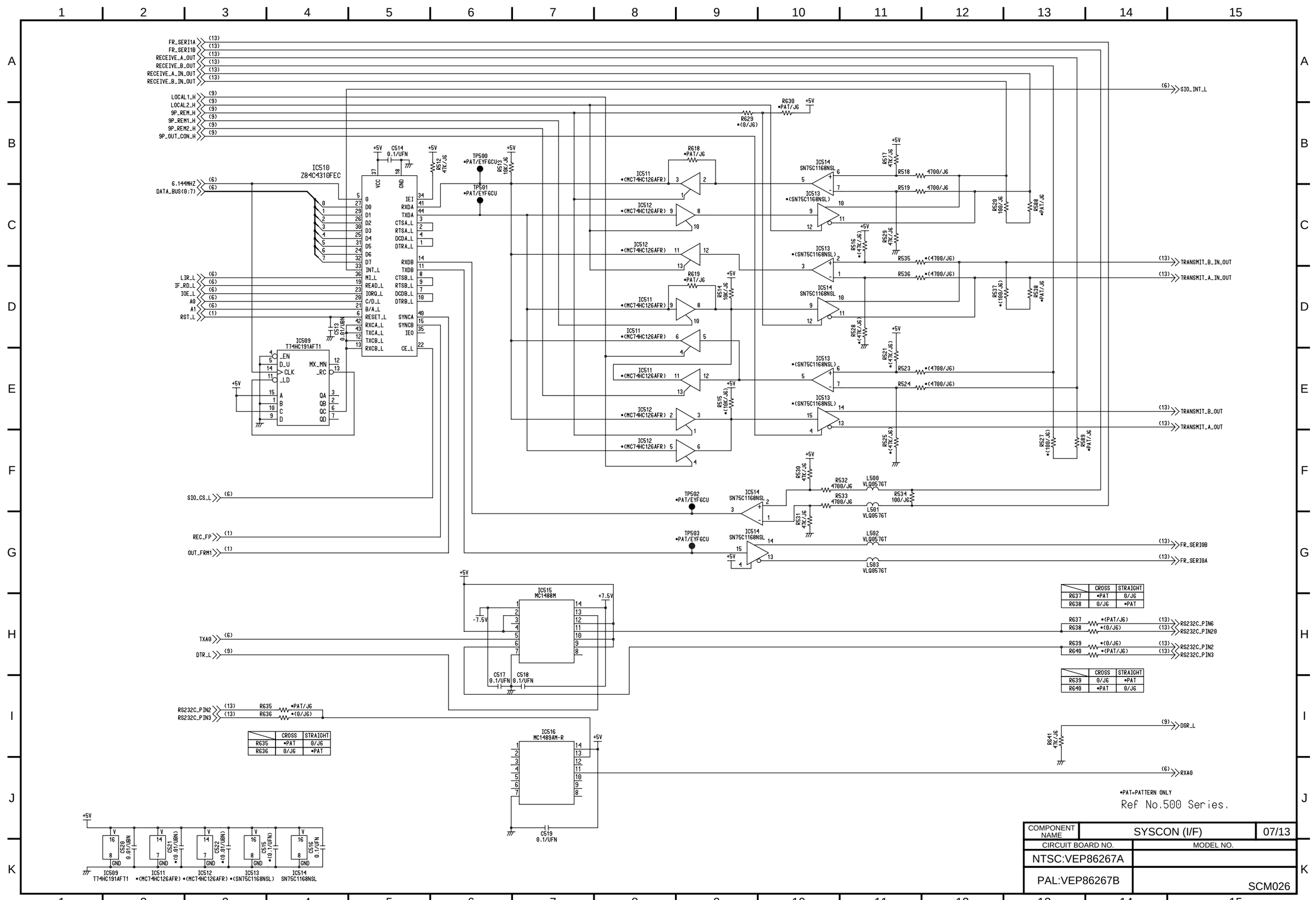
FR_SERI1A
FR_SERI1B
RECEIVE_A_OUT
RECEIVE_B_OUT
RECEIVE_A_IN_OUT
RECEIVE_B_IN_OUT
LOCAL1_H
LOCAL2_H
9P_REM_H
9P_REM1_H
9P_REM2_H
9P_OUT_CON_H
6.144MHZ
DATA_BUS(0:7)
LIR_L
IF_RD_L
IOE_L
A0
A1
RST_L
SIO_CS_L
REC_FP
OUT_FRM1
TXA0
DTR_L
RS232C_PIN2
RS232C_PIN3
SIO_INT_L
TRANSMIT_B_IN_OUT
TRANSMIT_A_IN_OUT
TRANSMIT_B_OUT
TRANSMIT_A_OUT
FR_SERI0B
FR_SERI0A
DSR_L
RXA0
RS232C_PIN6
RS232C_PIN20
RS232C_PIN2
RS232C_PIN3
IC510
Z84C4310FEC
IC509
T74HC191AFT1
IC511
IC512
IC513
IC514
SN75C1168NSL
IC515
MC1488M
IC516
MC1489AM-R
TP500
TP501
TP502
TP503
L500
L501
L502
L503
VLQ0576T
C513
C514
C517
C518
C519
C520
C521
C522
C515
C516
R512
R513
R514
R515
R516
R517
R518
R519
R520
R521
R523
R524
R525
R526
R527
R528
R529
R530
R531
R532
R533
R534
R535
R536
R537
R538
R539
R541
R588
R589
R618
R619
R629
R630
R635
R636
R637
R638
R639
R640
CROSS
STRAIGHT
*PAT
0/J6
*PAT=PATTERN ONLY
Ref No.500 Series.
COMPONENT NAME
SYSCON (I/F)
07/13
CIRCUIT BOARD NO.
MODEL NO.
NTSC:VEP86267A
PAL:VEP86267B
SCM026

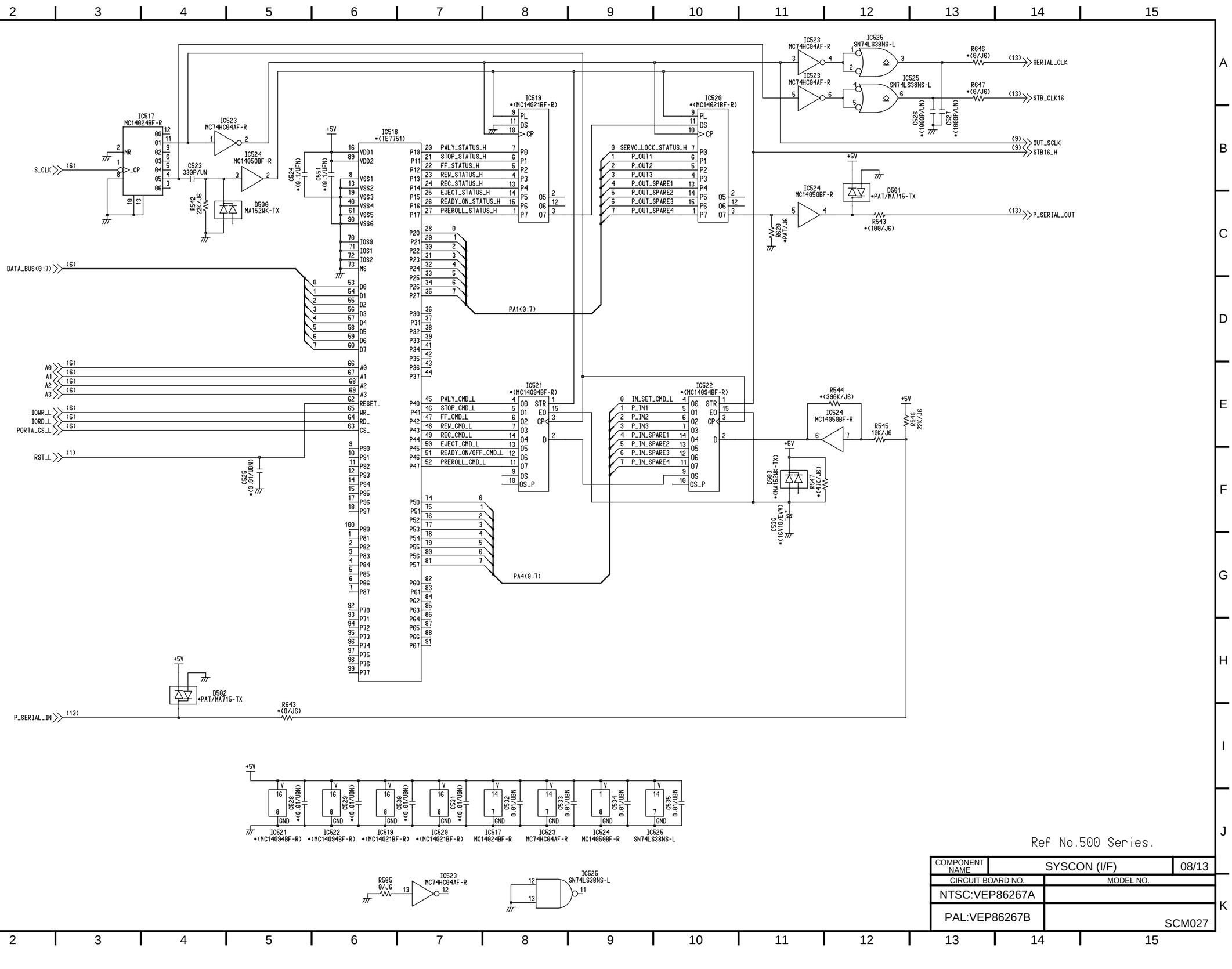
IC517 MC14024BF-R
IC523 MC74HC04AF-R
IC524 MC14050BF-R
D590 MA152WK-TX
IC518 *(TE7751)
IC519 *(MC14021BF-R)
IC520 *(MC14021BF-R)
IC525 SN74LS38NS-L
R646 *(0/J6)
R647 *(0/J6)
C526 *(1000P/UN)
C527 *(1000P/UN)
S_CLK
C523 330P/UN
R542 22K/J6
C524 *(0.1/UN)
C551 *(0.1/UN)
C525 *(0.01/UBN)
DATA_BUS(0:7)
RST_L
IOWR_L
IORD_L
PORTA_CS_L
A0
A1
A2
A3
RESET_
WR_
RD_
CS_
PA1(0:7)
PA4(0:7)
SERIAL_CLK
STB_CLK16
OUT_SCLK
STB16_H
P_SERIAL_OUT
P_SERIAL_IN
D501 *PA1/MA715-TX
R543 *(100/J6)
R629 *PA17/J6
D502 *PA1/MA715-TX
R643 *(0/J6)
IC521 *(MC14094BF-R)
IC522 *(MC14094BF-R)
IC522
R544 *(390K/J6)
R545 10K/J6
R546 22K/J6
D503 *(MA152WK-TX)
R547 *(47K/J6)
C536 *(16V10/EVY)
C528 *(0.01/UBN)
C529 *(0.01/UBN)
C530 *(0.01/UBN)
C531 *(0.01/UBN)
C532 0.01/UBN
C533 0.01/UBN
C534 0.01/UBN
C535 0.01/UBN
R585 0/J6
Ref No.500 Series.
COMPONENT NAME
SYSCON (I/F)
08/13
CIRCUIT BOARD NO.
MODEL NO.
NTSC:VEP86267A
PAL:VEP86267B
SCM027

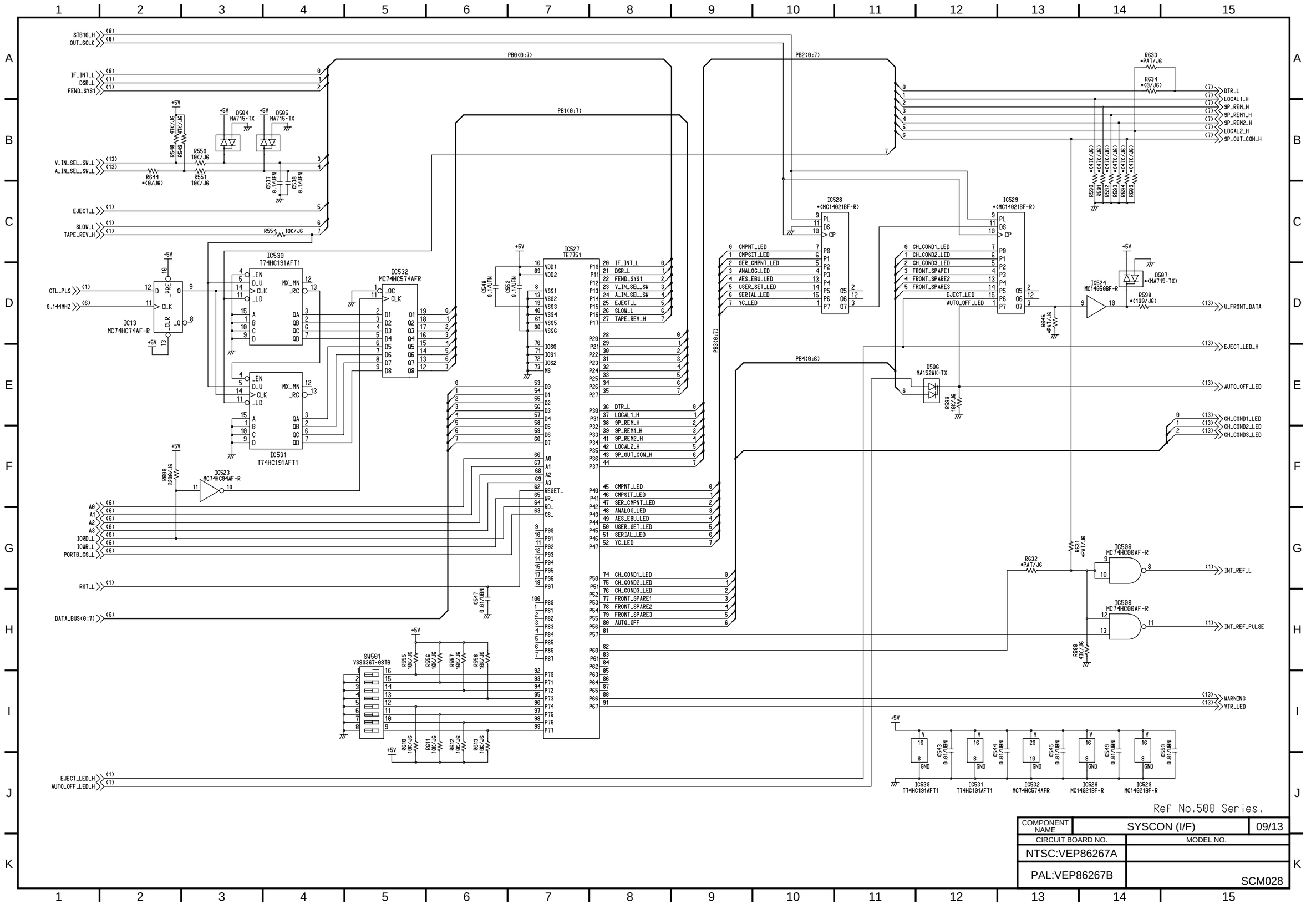
STB16_H
OUT_SCLK
IF_INT_L
DSR_L
FEND_SYS1
V_IN_SEL_SW_L
A_IN_SEL_SW_L
EJECT_L
SLOW_L
TAPE_REV_H
CTL_PLS
6.144MHZ
IC13
MC74HC74AF-R
IC530
T74HC191AFT1
IC531
T74HC191AFT1
IC532
MC74HC574AFR
IC527
TE7751
IC523
MC74HC04AF-R
SW501
VSS9367-08TB
PB0(0:7)
PB1(0:7)
PB2(0:7)
PB3(0:7)
PB4(0:6)
DATA_BUS(0:7)
RST_L
A0
A1
A2
A3
IORD_L
IOWR_L
PORTB_CS_L
EJECT_LED_H
AUTO_OFF_LED_H
IC528
*(MC14021BF-R)
IC529
*(MC14021BF-R)
IC524
MC14050BF-R
IC508
MC74HC00AF-R
D504
MA715-TX
D505
MA715-TX
D506
MA152WK-TX
D507
*(MA715-TX)
DTR_L
LOCAL1_H
9P_REM_H
9P_REM1_H
9P_REM2_H
LOCAL2_H
9P_OUT_CON_H
U_FRONT_DATA
EJECT_LED_H
AUTO_OFF_LED
CH_COND1_LED
CH_COND2_LED
CH_COND3_LED
INT_REF_L
INT_REF_PULSE
WARNING
VTR_LED
Ref No.500 Series.
COMPONENT NAME
SYSCON (I/F)
09/13
CIRCUIT BOARD NO.
MODEL NO.
NTSC:VEP86267A
PAL:VEP86267B
SCM028

*PAT=PATTERN ONLY Ref No.700,800 Series.

COMPONENT NAME	SYSCON (AV I/F)	10/13
CIRCUIT BOARD NO.	MODEL NO.	
NTSC:VEP86267A		
PAL:VEP86267B		SCM029

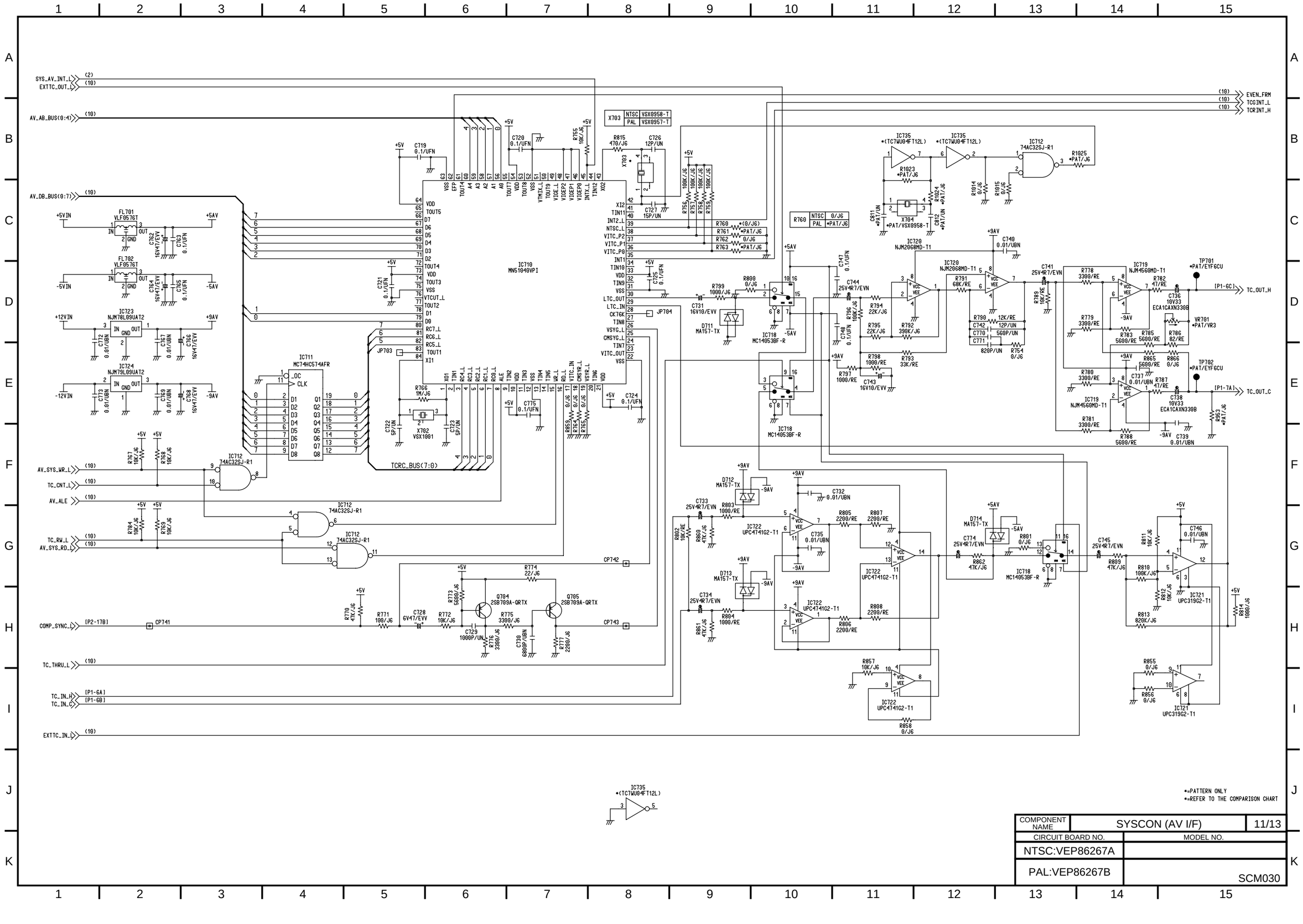

COMPONENT NAME	SYSCON (AV I/F)	11/13
CIRCUIT BOARD NO.	MODEL NO.	
NTSC:VEP86267A		
PAL:VEP86267B	SCM030	

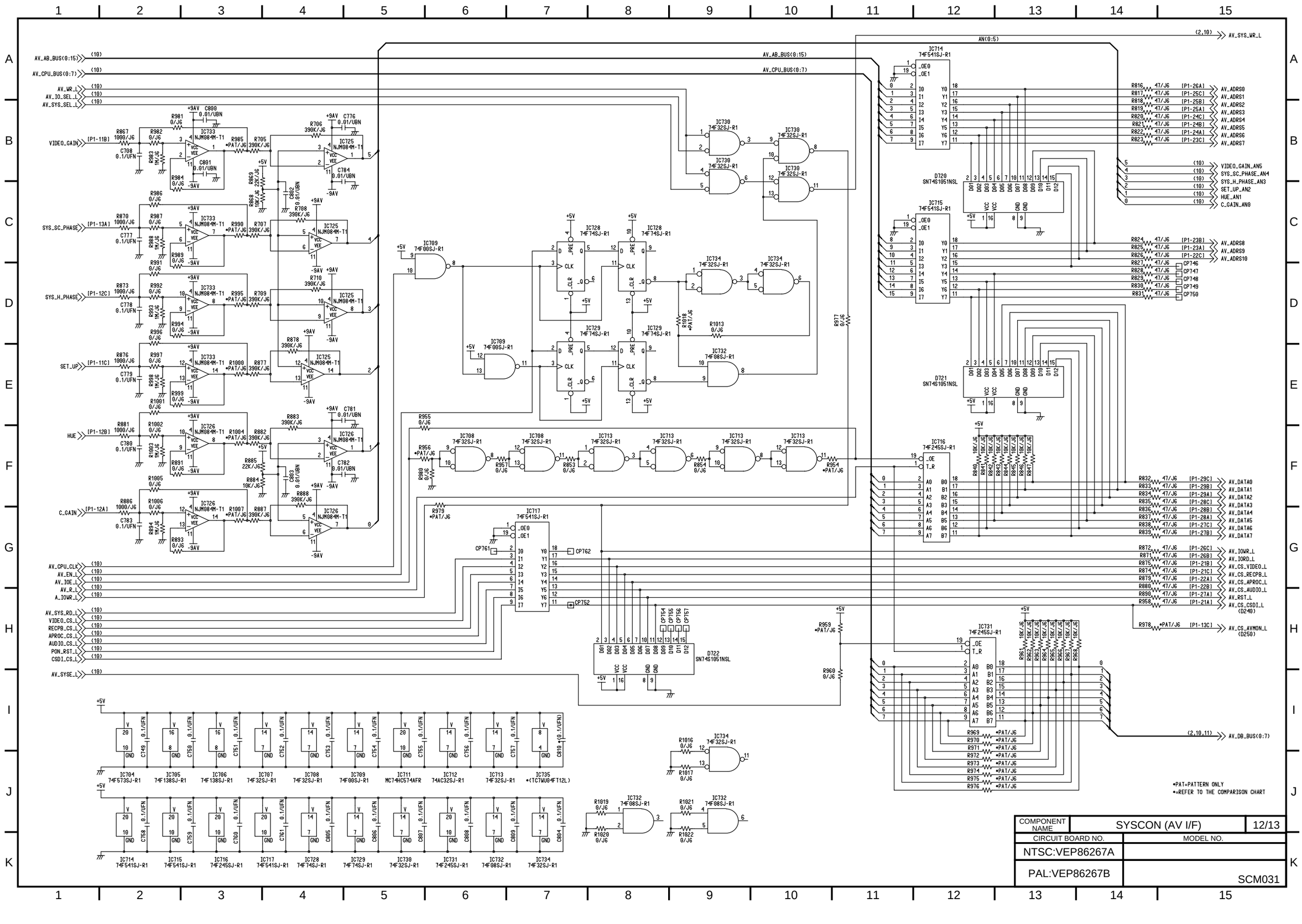
AV_AB_BUS(0:15)
AV_CPU_BUS(0:7)
AV_WR_L
AV_IO_SEL_L
AV_SYS_SEL_L
VIDEO_GAIN
SYS_SC_PHASE
SYS_H_PHASE
SET_UP
HUE
C_GAIN
AV_CPU_CLK
AV_EN_L
AV_IOE_L
AV_R_L
A_IOWR_L
AV_SYS_RD_L
VIDEO_CS_L
RECPB_CS_L
APROC_CS_L
AUDIO_CS_L
PON_RST_L
CSDI_CS_L
AV_SYSE_L
AN(0:5)
AV_SYS_WR_L
AV_ADRS0
AV_ADRS1
AV_ADRS2
AV_ADRS3
AV_ADRS4
AV_ADRS5
AV_ADRS6
AV_ADRS7
AV_ADRS8
AV_ADRS9
AV_ADRS10
VIDEO_GAIN_AN5
SYS_SC_PHASE_AN4
SYS_H_PHASE_AN3
SET_UP_AN2
HUE_AN1
C_GAIN_AN0
AV_DATA0
AV_DATA1
AV_DATA2
AV_DATA3
AV_DATA4
AV_DATA5
AV_DATA6
AV_DATA7
AV_IOWR_L
AV_IORD_L
AV_CS_VIDEO_L
AV_CS_RECPB_L
AV_CS_APROC_L
AV_CS_AUDIO_L
AV_RST_L
AV_CS_CSDI_L (D24G)
AV_CS_AVMON_L (D25G)
AV_DB_BUS(0:7)
*PAT=PATTERN ONLY
*=REFER TO THE COMPARISON CHART
COMPONENT NAME
SYSCON (AV I/F)
12/13
CIRCUIT BOARD NO.
MODEL NO.
NTSC:VEP86267A
PAL:VEP86267B
SCM031

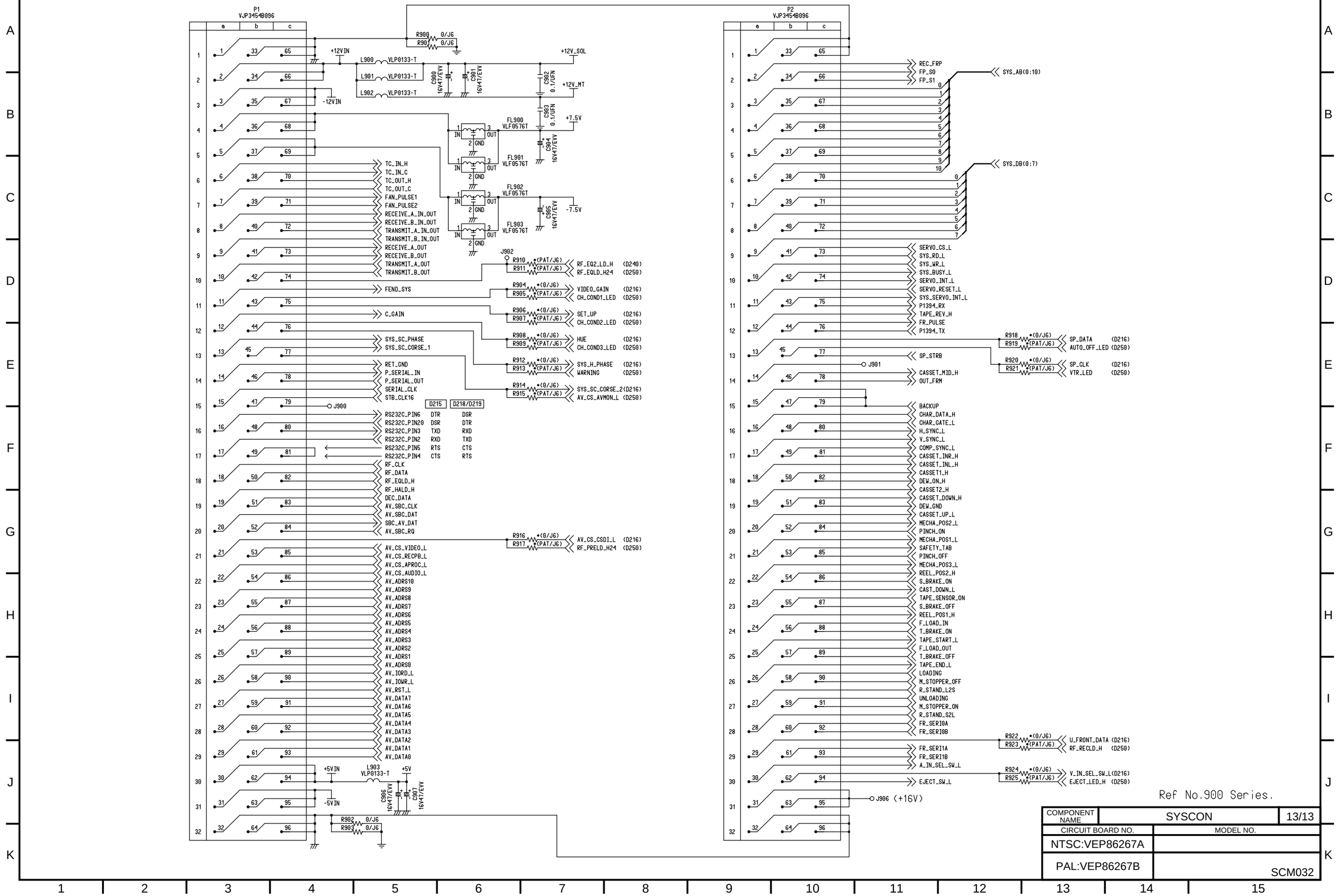
P1
VJP3454B096
P2
VJP3454B096
R900 0/J6
R901 0/J6
+12VIN
-12VIN
L900 VLP0133-T
L901 VLP0133-T
L902 VLP0133-T
C900 16V47/EVV
C901 16V47/EVV
C902 0.1/UFN
C903 0.1/UFN
C904 16V47/EVV
C905 16V47/EVV
+12V_SOL
+12V_MT
+7.5V
-7.5V
FL900 VLF0576T
FL901 VLF0576T
FL902 VLF0576T
FL903 VLF0576T
IN
OUT
GND
TC_IN_H
TC_IN_C
TC_OUT_H
TC_OUT_C
FAN_PULSE1
FAN_PULSE2
RECEIVE_A_IN_OUT
RECEIVE_B_IN_OUT
TRANSMIT_A_IN_OUT
TRANSMIT_B_IN_OUT
RECEIVE_A_OUT
RECEIVE_B_OUT
TRANSMIT_A_OUT
TRANSMIT_B_OUT
FEND_SYS
C_GAIN
SYS_SC_PHASE
SYS_SC_CORSE_1
RET_GND
P_SERIAL_IN
P_SERIAL_OUT
SERIAL_CLK
STB_CLK16
J900
J902
J901
J906 (+16V)
D215
D218/D219
RS232C_PIN6 DTR DSR
RS232C_PIN20 DSR DTR
RS232C_PIN3 TXD RXD
RS232C_PIN2 RXD TXD
RS232C_PIN5 RTS CTS
RS232C_PIN4 CTS RTS
RF_CLK
RF_DATA
RF_EQLD_H
RF_HALD_H
DEC_DATA
AV_SBC_CLK
AV_SBC_DAT
SBC_AV_DAT
AV_SBC_RQ
AV_CS_VIDEO_L
AV_CS_RECPB_L
AV_CS_APROC_L
AV_CS_AUDIO_L
AV_ADRS10
AV_ADRS9
AV_ADRS8
AV_ADRS7
AV_ADRS6
AV_ADRS5
AV_ADRS4
AV_ADRS3
AV_ADRS2
AV_ADRS1
AV_ADRS0
AV_IORD_L
AV_IOWR_L
AV_RST_L
AV_DATA7
AV_DATA6
AV_DATA5
AV_DATA4
AV_DATA3
AV_DATA2
AV_DATA1
AV_DATA0
R910 *(PAT/J6) RF_EQ2_LD_H (D240)
R911 *(PAT/J6) RF_EQLD_H24 (D250)
R904 *(0/J6) VIDEO_GAIN (D216)
R905 *(PAT/J6) CH_COND1_LED (D250)
R906 *(0/J6) SET_UP (D216)
R907 *(PAT/J6) CH_COND2_LED (D250)
R908 *(0/J6) HUE (D216)
R909 *(PAT/J6) CH_COND3_LED (D250)
R912 *(0/J6) SYS_H_PHASE (D216)
R913 *(PAT/J6) WARNING (D250)
R914 *(0/J6) SYS_SC_CORSE_2 (D216)
R915 *(PAT/J6) AV_CS_AVMON_L (D250)
R916 *(0/J6) AV_CS_CSDI_L (D216)
R917 *(PAT/J6) RF_PRELD_H24 (D250)
L903 VLP0133-T
+5VIN
-5VIN
+5V
C906 16V47/EVV
C907 16V47/EVV
R902 0/J6
R903 0/J6
REC_FRP
FP_S0
FP_S1
SYS_AB(0:10)
SYS_DB(0:7)
SERVO_CS_L
SYS_RD_L
SYS_WR_L
SYS_BUSY_L
SERVO_INT_L
SERVO_RESET_L
SYS_SERVO_INT_L
P1394_RX
TAPE_REV_H
FR_PULSE
P1394_TX
R918 *(0/J6) SP_DATA (D216)
R919 *(PAT/J6) AUTO_OFF_LED (D250)
R920 *(0/J6) SP_CLK (D216)
R921 *(PAT/J6) VTR_LED (D250)
SP_STRB
CASSET_MID_H
OUT_FRM
BACKUP
CHAR_DATA_H
CHAR_GATE_L
H_SYNC_L
V_SYNC_L
COMP_SYNC_L
CASSET_INR_H
CASSET_INL_H
CASSET1_H
DEW_ON_H
CASSET2_H
CASSET_DOWN_H
DEW_GND
CASSET_UP_L
MECHA_POS2_L
PINCH_ON
MECHA_POS1_L
SAFETY_TAB
PINCH_OFF
MECHA_POS3_L
REEL_POS2_H
S_BRAKE_ON
CAST_DOWN_L
TAPE_SENSOR_ON
S_BRAKE_OFF
REEL_POS1_H
F_LOAD_IN
T_BRAKE_ON
TAPE_START_L
F_LOAD_OUT
T_BRAKE_OFF
TAPE_END_L
LOADING
M_STOPPER_OFF
R_STAND_L2S
UNLOADING
M_STOPPER_ON
R_STAND_S2L
FR_SERI0A
FR_SERI0B
FR_SERI1A
FR_SERI1B
A_IN_SEL_SW_L
EJECT_SW_L
R922 *(0/J6) U_FRONT_DATA (D216)
R923 *(PAT/J6) RF_RECLD_H (D250)
R924 *(0/J6) V_IN_SEL_SW_L (D216)
R925 *(PAT/J6) EJECT_LED_H (D250)
Ref No.900 Series.
COMPONENT NAME
SYSCON
13/13
CIRCUIT BOARD NO.
MODEL NO.
NTSC:VEP86267A
PAL:VEP86267B
SCM032

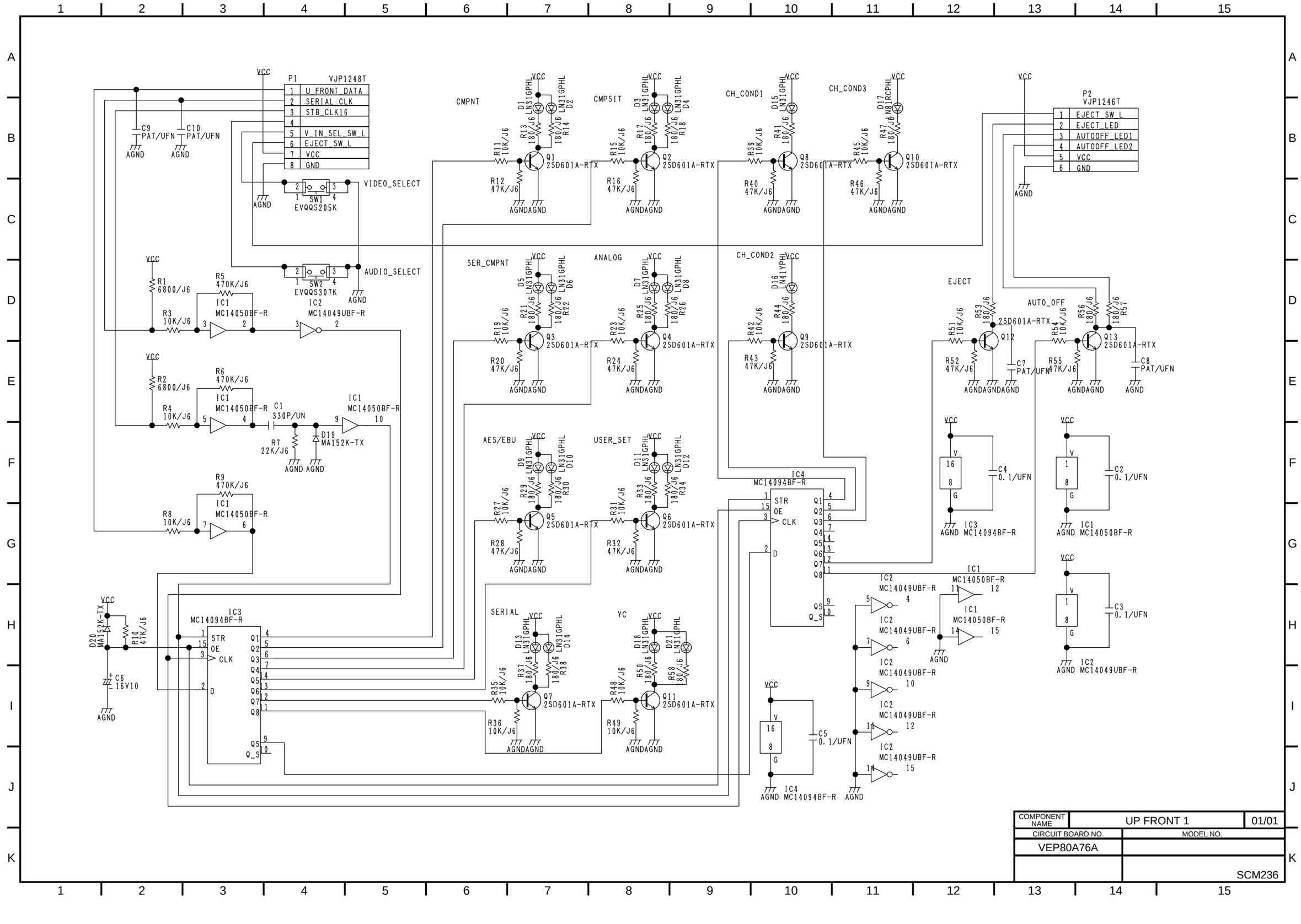
P1 VJP1248T
1 U_FRONT_DATA
2 SERIAL_CLK
3 STB_CLK16
4
5 V_IN_SEL_SW_L
6 EJECT_SW_L
7 VCC
8 GND
C9 PAT/UFN
C10 PAT/UFN
AGND
VCC
SW1 EVQQS205K
VIDEO_SELECT
SW2 EVQQS307K
AUDIO_SELECT
R1 6800/J6
R2 6800/J6
R3 10K/J6
R4 10K/J6
R5 470K/J6
R6 470K/J6
R8 10K/J6
R9 470K/J6
R7 22K/J6
C1 330P/UN
D19 MA152K-TX
IC1 MC14050BF-R
IC2 MC14049UBF-R
IC3 MC14094BF-R
D20 MA152K-TX
R10 47K/J6
C6 16V10
CMPNT
CMPSIT
CH_COND1
CH_COND3
SER_CMPNT
ANALOG
CH_COND2
AES/EBU
USER_SET
SERIAL
YC
D1 LN31GPHL
D2 LN31GPHL
D3 LN31GPHL
D4 LN31GPHL
D15 LN31GPHL
D17 NR1RCPHL
D5 LN31GPHL
D6 LN31GPHL
D7 LN31GPHL
D8 LN31GPHL
D16 LN41YPHL
D9 LN31GPHL
D10 LN31GPHL
D11 LN31GPHL
D12 LN31GPHL
D13 LN31GPHL
D14 LN31GPHL
D18 LN31GPHL
D21 LN31GPHL
R11 10K/J6
R12 47K/J6
R13 180/J6
R14 180/J6
R15 10K/J6
R16 47K/J6
R17 180/J6
R18 180/J6
R39 10K/J6
R40 47K/J6
R41 180/J6
R45 10K/J6
R46 47K/J6
R47 180/J6
R19 10K/J6
R20 47K/J6
R21 180/J6
R22 180/J6
R23 10K/J6
R24 47K/J6
R25 180/J6
R26 180/J6
R42 10K/J6
R43 47K/J6
R44 180/J6
R27 10K/J6
R28 47K/J6
R29 180/J6
R30 180/J6
R31 10K/J6
R32 47K/J6
R33 180/J6
R34 180/J6
R35 10K/J6
R36 10K/J6
R37 180/J6
R38 180/J6
R48 10K/J6
R49 10K/J6
R50 180/J6
R58 180/J6
Q1 2SD601A-RTX
Q2 2SD601A-RTX
Q8 2SD601A-RTX
Q10 2SD601A-RTX
Q3 2SD601A-RTX
Q4 2SD601A-RTX
Q9 2SD601A-RTX
Q5 2SD601A-RTX
Q6 2SD601A-RTX
Q7 2SD601A-RTX
Q11 2SD601A-RTX
IC4 MC14094BF-R
STR
OE
CLK
D
QS
Q_S
C5 0.1/UFN
C4 0.1/UFN
C2 0.1/UFN
C3 0.1/UFN
P2 VJP1246T
1 EJECT_SW_L
2 EJECT_LED
3 AUTOOFF_LED1
4 AUTOOFF_LED2
5 VCC
6 GND
EJECT
AUTO_OFF
2SD601A-RTX
R51 10K/J6
R52 47K/J6
R53 180/J6
R54 10K/J6
R55 47K/J6
R56 180/J6
R57 180/J6
Q12
Q13 2SD601A-RTX
C7 PAT/UFN
C8 PAT/UFN
COMPONENT NAME
UP FRONT 1
01/01
CIRCUIT BOARD NO.
MODEL NO.
VEP80A76A
SCM236

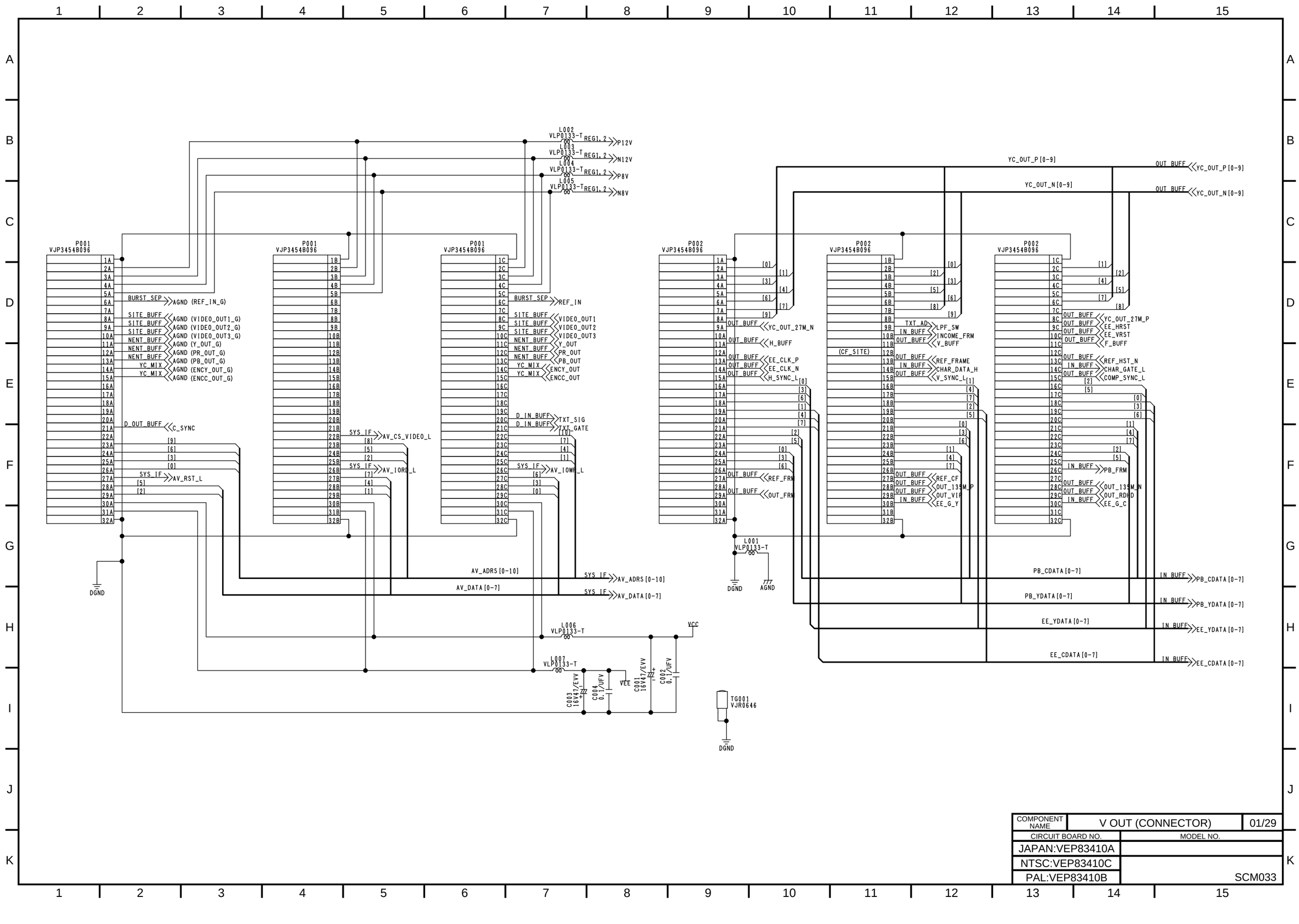

COMPONENT NAME	V OUT (CONNECTOR)	01/29
CIRCUIT BOARD NO.	MODEL NO.	
JAPAN:VEP83410A		
NTSC:VEP83410C		SCM033
PAL:VEP83410B		

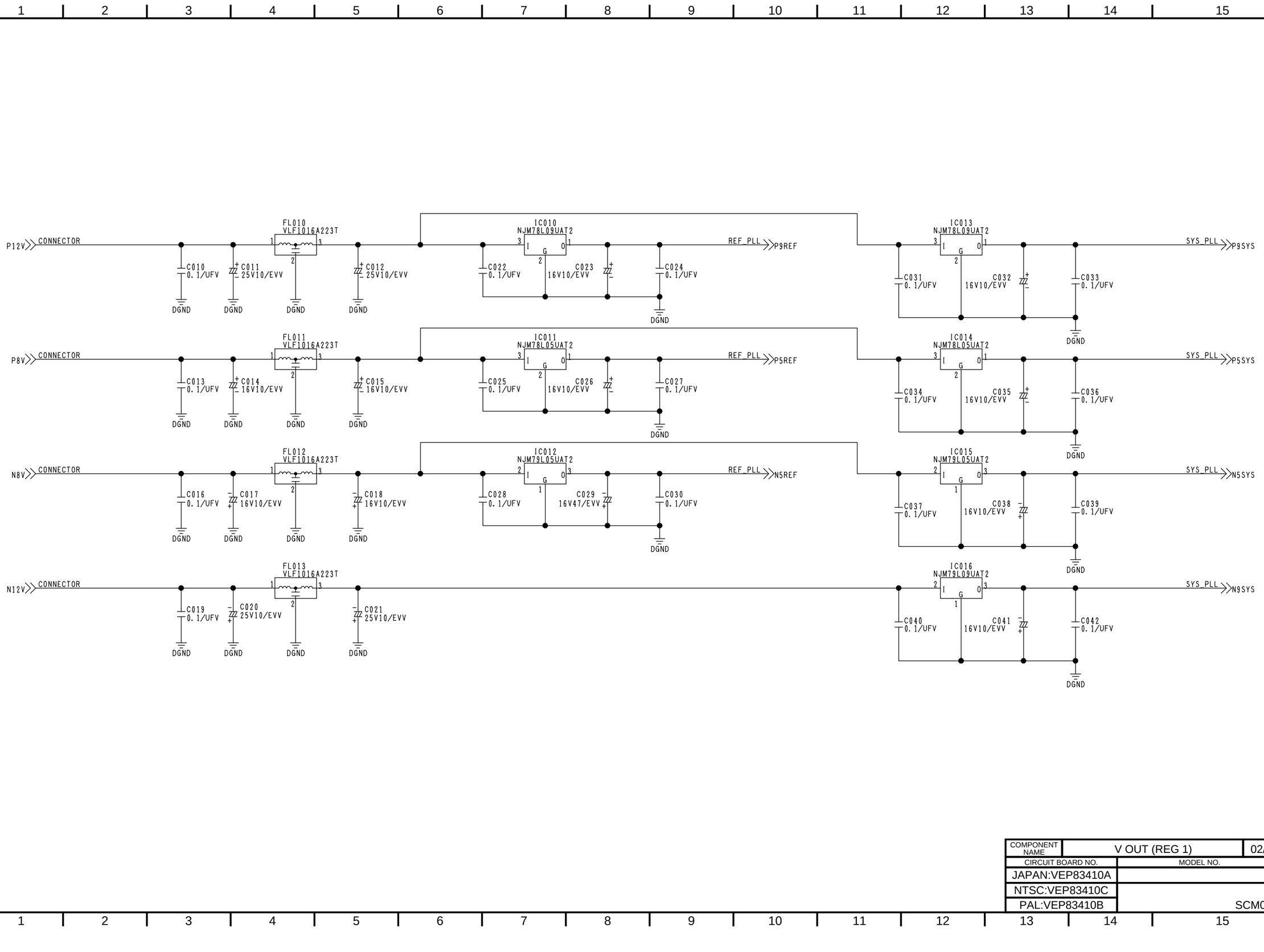

COMPONENT NAME	V OUT (REG 1)	02/29
CIRCUIT BOARD NO.	MODEL NO.	
JAPAN:VEP83410A		
NTSC:VEP83410C		SCM034
PAL:VEP83410B		

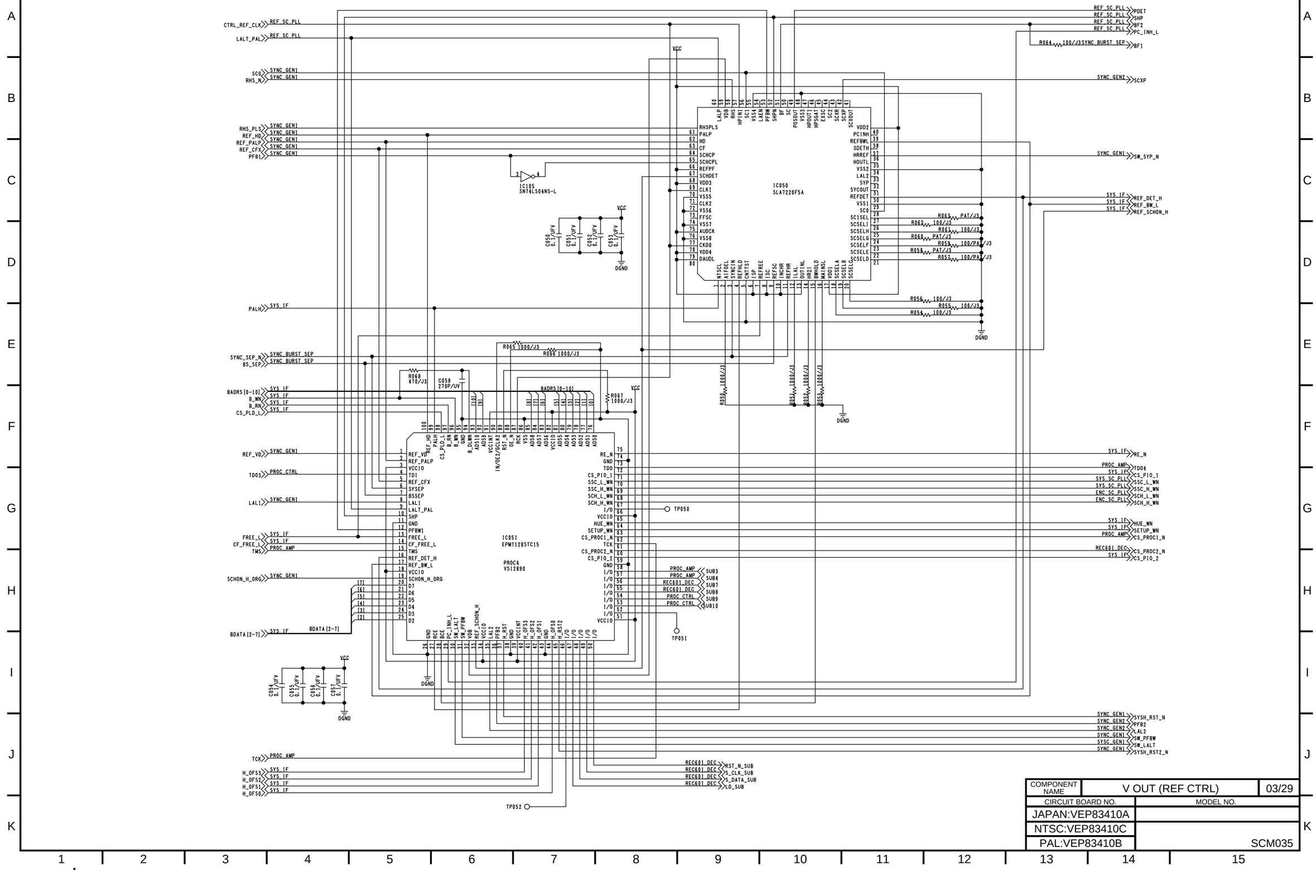
CTRL_REF_CLK
LALT_PAL
SC0
RHS_N
RHS_PLS
REF_HD
REF_PALP
REF_CFX
PFB1
PALH
SYNC_SEP_N
BS_SEP
BADRS[0-10]
B_WN
B_RN
CS_PLD_L
REF_VD
TDO3
LAL1
FREE_L
CF_FREE_L
TMS
SCHON_H_ORG
BDATA[2-7]
TCK
H_OFS3
H_OFS2
H_OFS1
H_OFS0
IC105
SN74LS04NS-L
IC050
SLA7220F5A
IC051
EPM7128STC15
PROC4
VS12890
C050 0.1/UFV
C051 0.1/UFV
C052 0.1/UFV
C053 0.1/UFV
C054 0.1/UFV
C055 0.1/UFV
C056 0.1/UFV
C057 0.1/UFV
C058 270P/UV
R065 1000/J3
R066 1000/J3
R067 1000/J3
R068 470/J3
R055 1000/J3
R054 1000/J3
R053 1000/J3
R052 1000/J3
R063 PAT/J3
R062 100/J3
R061 100/J3
R060 PAT/J3
R059 100/PAT/J3
R058 PAT/J3
R057 100/PAT/J3
R056 100/J3
R055 100/J3
R054 100/J3
R064 100/J3SYNC BURST SEP
TP050
TP051
TP052
VCC
DGND
REF_SC_PLL
PDET
SHP
BF2
PC_INH_L
BF1
SYNC_GEN2
SCXP
SYNC_GEN1
SW_SYP_N
SYS_IF
REF_DET_H
REF_BW_L
REF_SCHON_H
RE_N
TDO4
CS_PI0_1
SSC_L_WN
SSC_H_WN
SCH_L_WN
SCH_H_WN
HUE_WN
SETUP_WN
CS_PROC1_N
CS_PROC2_N
CS_PI0_2
SUB3
SUB4
SUB7
SUB8
SUB9
SUB10
RST_N_SUB
S_CLK_SUB
S_DATA_SUB
LD_SUB
SYSH_RST_N
PFB2
LAL2
SW_PFBW
SW_LALT
SYSH_RST2_N
COMPONENT NAME
V OUT (REF CTRL)
03/29
CIRCUIT BOARD NO.
MODEL NO.
JAPAN:VEP83410A
NTSC:VEP83410C
PAL:VEP83410B
SCM035

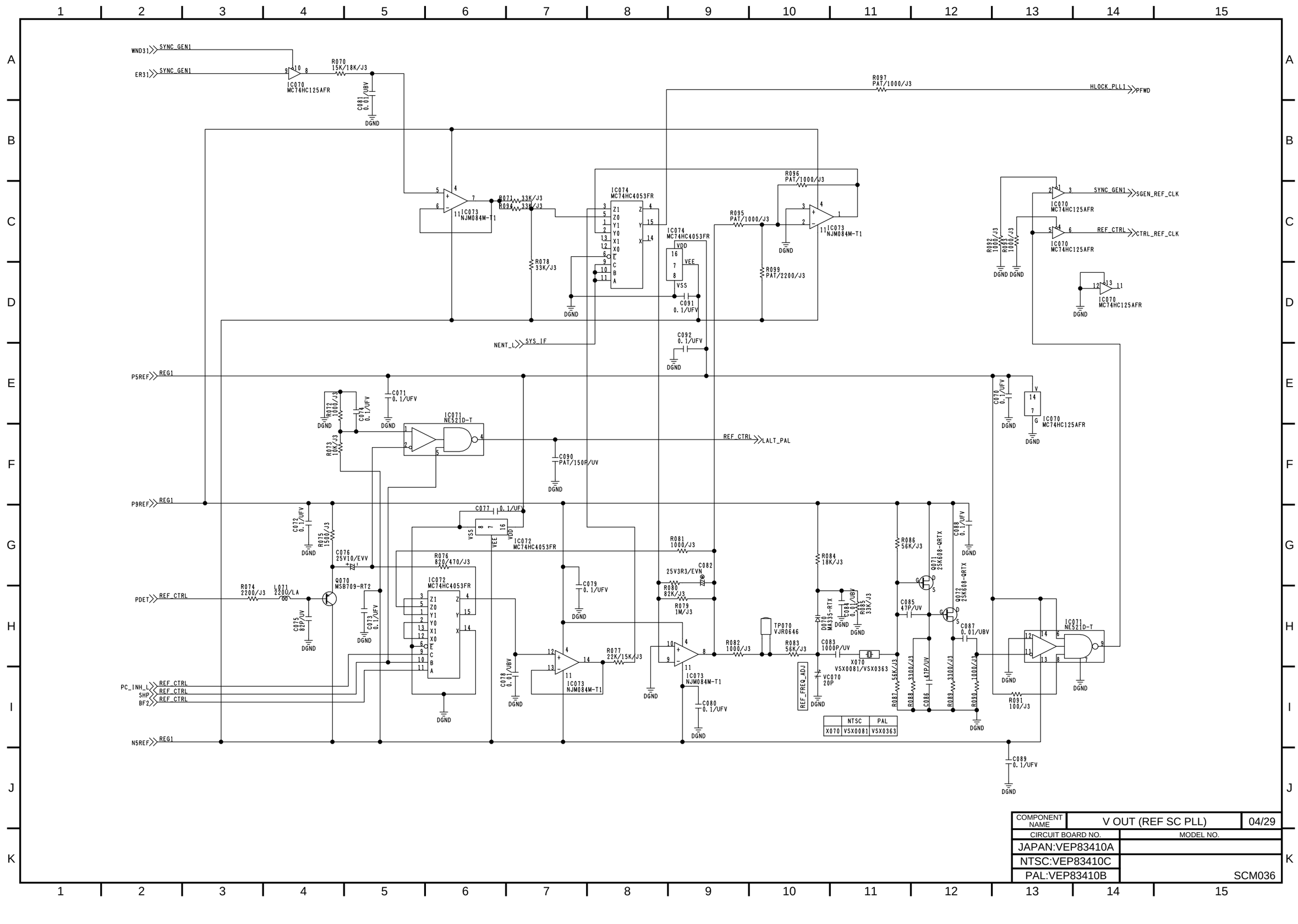

COMPONENT NAME	V OUT (REF SC PLL)
04/29	
CIRCUIT BOARD NO.	MODEL NO.
JAPAN:VEP83410A	
NTSC:VEP83410C	
PAL:VEP83410B	SCM036

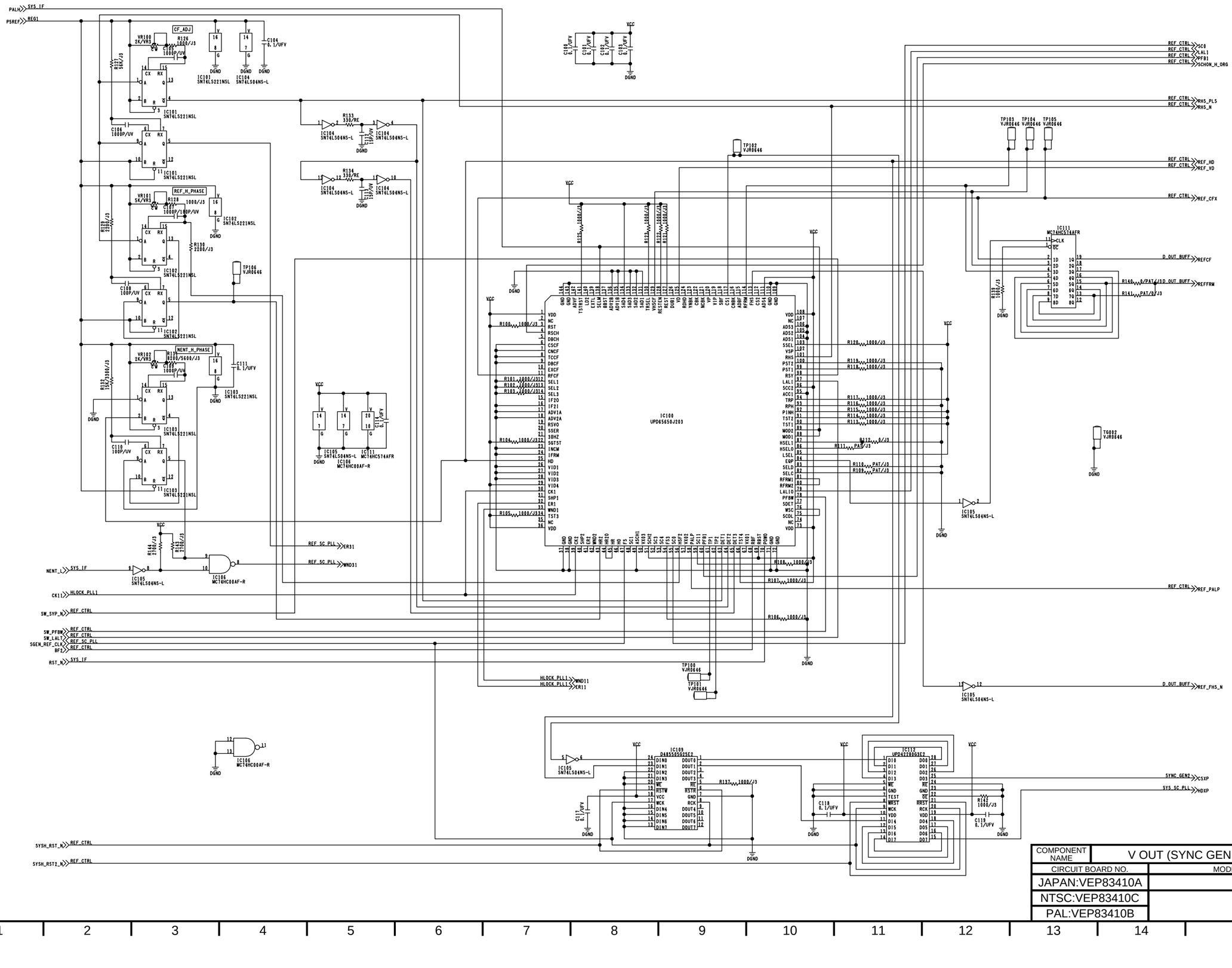

COMPONENT NAME	V OUT (SYNC GEN 1)	05/29
CIRCUIT BOARD NO.	MODEL NO.	
JAPAN:VEP83410A		
NTSC:VEP83410C		
PAL:VEP83410B		SCM037

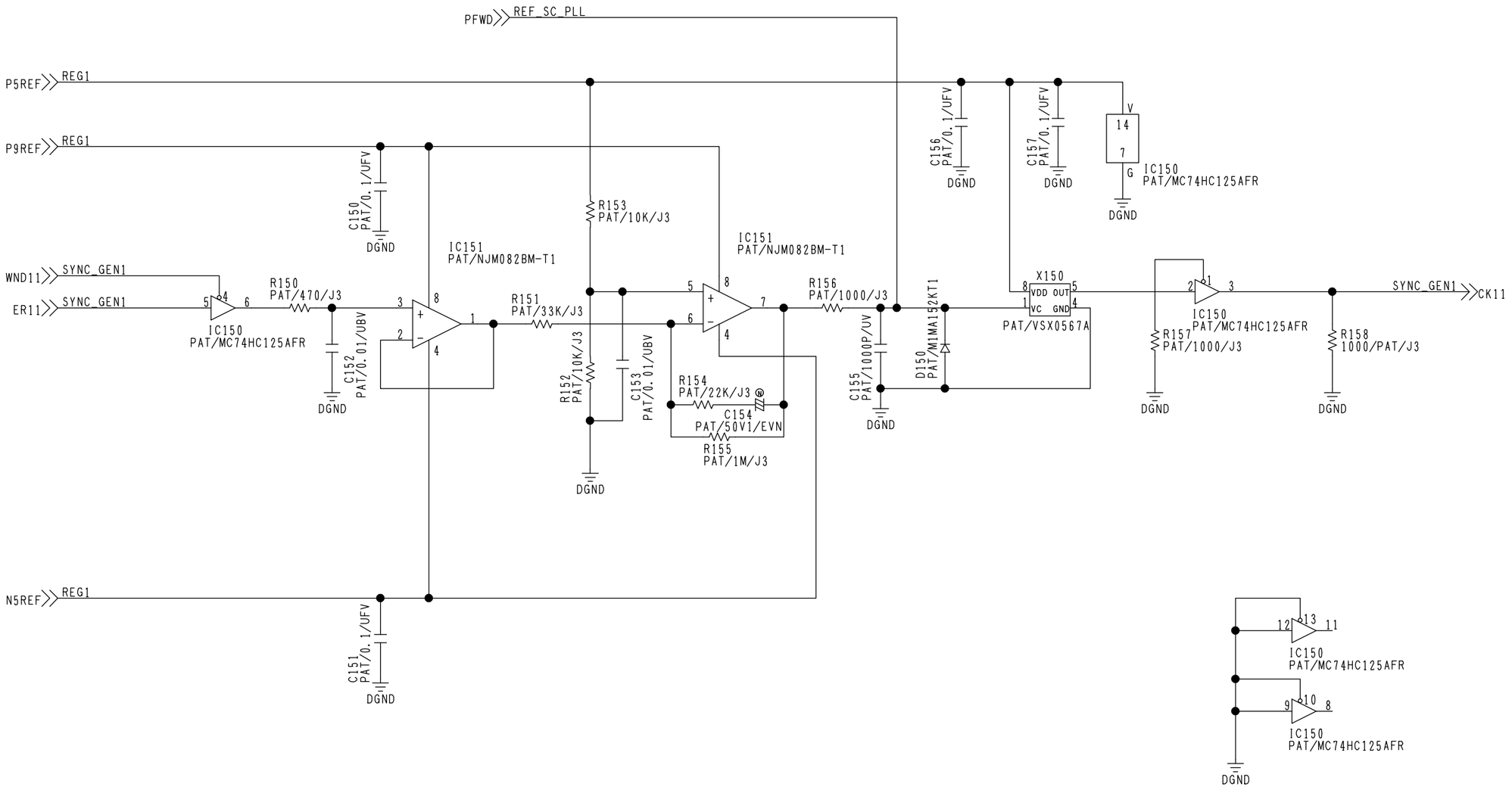

COMPONENT NAME	V OUT (H LOCK PLL)	06/29
CIRCUIT BOARD NO.	MODEL NO.	
JAPAN:VEP83410A		
NTSC:VEP83410C		SCM038
PAL:VEP83410B		

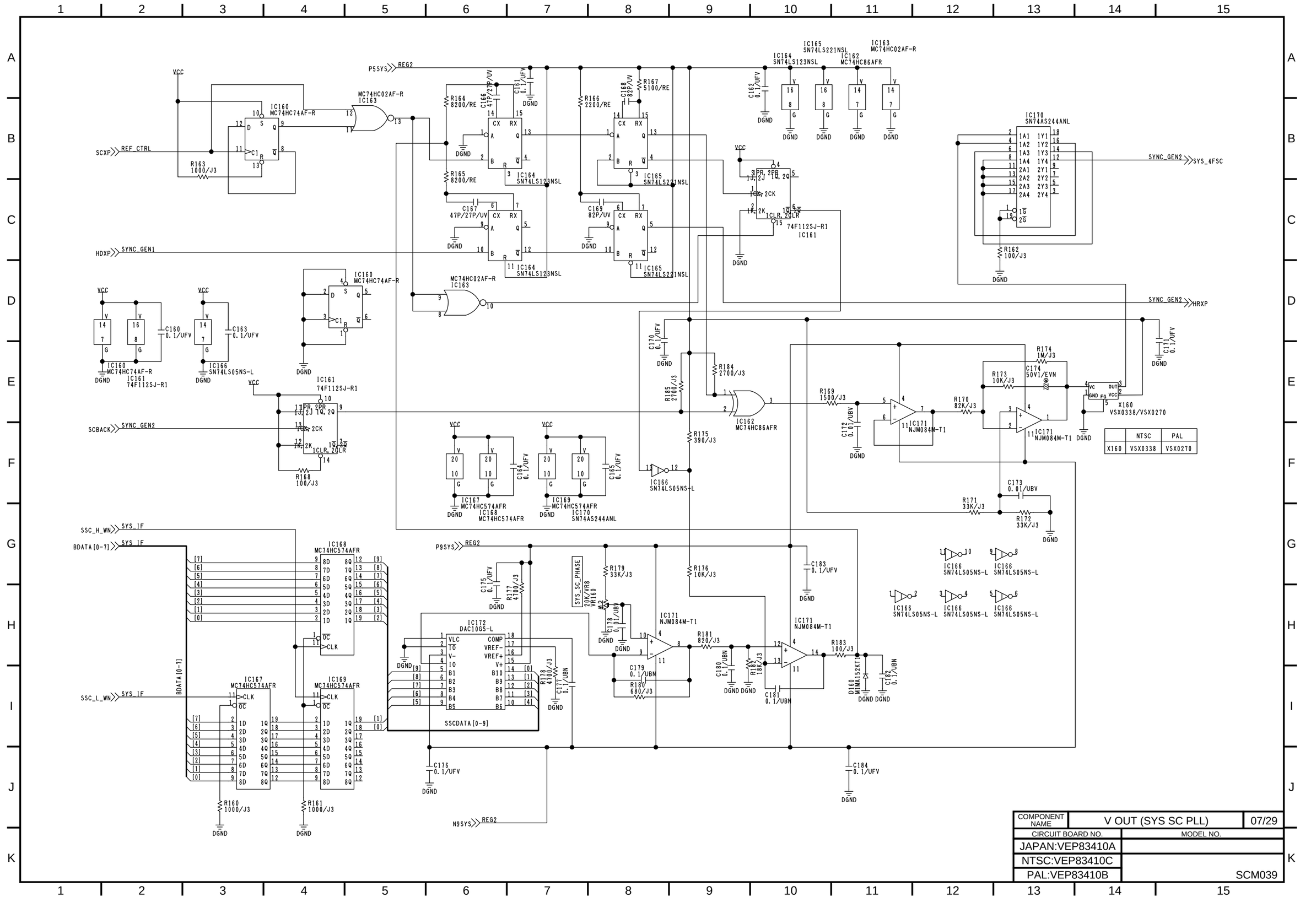
P5SYS
REG2
SCXP
REF_CTRL
HDXP
SYNC_GEN1
SCBACK
SYNC_GEN2
SSC_H_WN
SYS_IF
BDATA[0-7]
SSC_L_WN
P9SYS
N9SYS
SYS_SC_PHASE
SSCDATA[0-9]
SYNC_GEN2
SYS_4FSC
SYNC_GEN2
HRXP
IC160 MC74HC74AF-R
IC161 74F112SJ-R1
IC162 MC74HC86AFR
IC163 MC74HC02AF-R
IC164 SN74LS123NSL
IC165 SN74LS221NSL
IC166 SN74LS05NS-L
IC167 MC74HC574AFR
IC168 MC74HC574AFR
IC169 MC74HC574AFR
IC170 SN74AS244ANL
IC171 NJM084M-T1
IC172 DAC10GS-L
X160 VSX0338/VSX0270
NTSC VSX0338
PAL VSX0270
COMPONENT NAME: V OUT (SYS SC PLL)
07/29
CIRCUIT BOARD NO.
MODEL NO.
JAPAN:VEP83410A
NTSC:VEP83410C
PAL:VEP83410B
SCM039

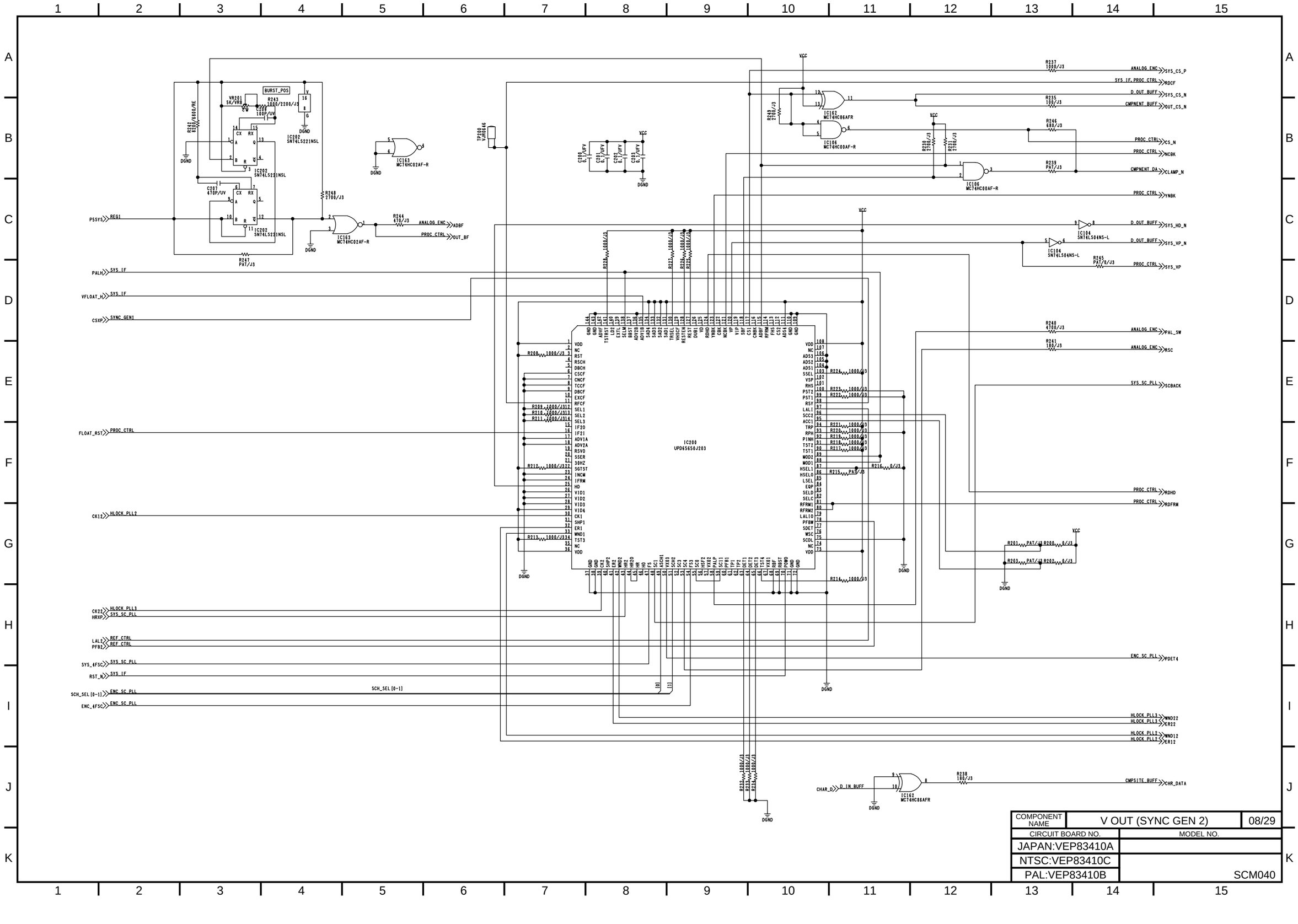
IC200
UPD65650J203
IC202
SN74LS221NSL
IC163
MC74HC02AF-R
IC162
MC74HC86AFR
IC196
MC74HC00AF-R
IC104
SN74LS04NS-L
VR201
5K/VR8
BURST_POS
R249
1000/2200/J3
C208
100P/UV
R242
8200/8910/RE
C207
470P/UV
R248
2700/J3
R247
PAT/J3
R244
470/J3
R237
1000/J3
R235
100/J3
R246
680/J3
R238
2700/J3
R233
2700/J3
R239
PAT/J3
R245
PAT/0/J3
R240
470/J3
R241
100/J3
R208
1000/J3
R224
1000/J3
R223
1000/J3
R222
1000/J3
R221
1000/J3
R220
1000/J3
R219
1000/J3
R218
1000/J3
R217
1000/J3
R216
0/J3
R215
PAT/J3
R214
1000/J3
R212
1000/J3
R213
1000/J3
R201
PAT/J3
R200
0/J3
R203
PAT/J3
R202
0/J3
R238
100/J3
C200
0.1/UFV
C201
0.1/UFV
C202
0.1/UFV
C203
0.1/UFV
VCC
DGND
P5SYS
REG1
PALH
SYS_IF
VFLOAT_H
SYS_IF
CSXP
SYNC_GEN1
FLOAT_RST
PROC_CTRL
CK12
HLOCK_PLL2
CK22
HLOCK_PLL3
HRXP
SYS_SC_PLL
LAL2
REF_CTRL
PFB2
REF_CTRL
SYS_4FSC
SYS_SC_PLL
RST_N
SYS_IF
SCH_SEL[0-1]
ENC_SC_PLL
SCH_SEL[0-1]
ENC_4FSC
ENC_SC_PLL
ANALOG_ENC
ADBF
PROC_CTRL
OUT_BF
ANALOG_ENC
SYS_CS_P
SYS_IF_PROC_CTRL
RDCF
D_OUT_BUFF
SYS_CS_N
CMPNENT_BUFF
OUT_CS_N
PROC_CTRL
CS_N
PROC_CTRL
NCBK
CMPNENT_DA
CLAMP_N
PROC_CTRL
YNBK
D_OUT_BUFF
SYS_HD_N
D_OUT_BUFF
SYS_VP_N
PROC_CTRL
SYS_VP
ANALOG_ENC
PAL_SW
ANALOG_ENC
RSC
SYS_SC_PLL
SCBACK
PROC_CTRL
RDHD
PROC_CTRL
RDFRM
ENC_SC_PLL
PDET4
HLOCK_PLL3
WND22
HLOCK_PLL3
VER22
HLOCK_PLL2
WND12
HLOCK_PLL2
VER12
CMPSITE_BUFF
CHR_DATA
CHAR_D
D_IN_BUFF
COMPONENT NAME
V OUT (SYNC GEN 2)
08/29
CIRCUIT BOARD NO.
MODEL NO.
JAPAN:VEP83410A
NTSC:VEP83410C
PAL:VEP83410B
SCM040

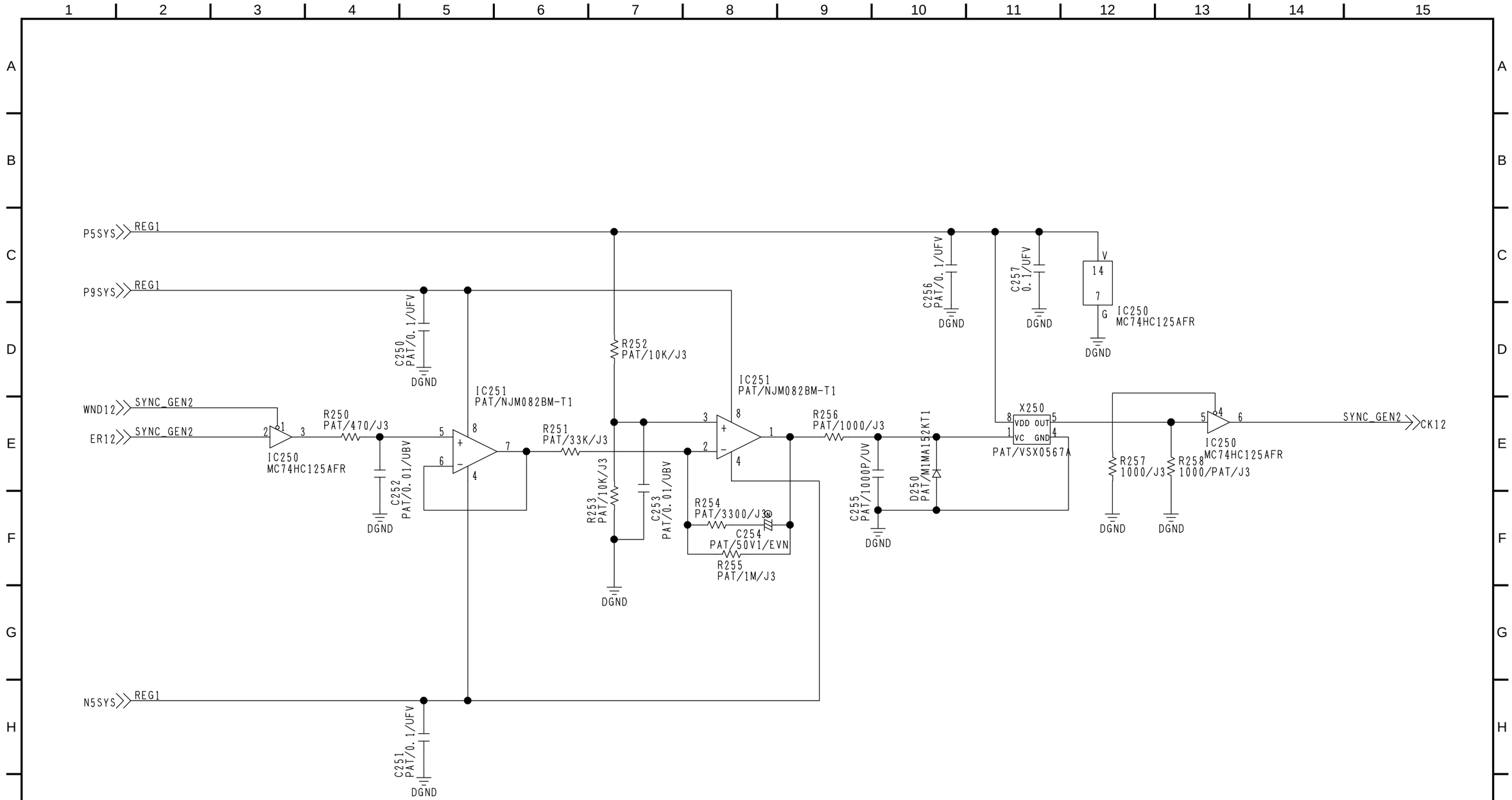

COMPONENT NAME	V OUT (H LOCK PLL 2)	09/29
CIRCUIT BOARD NO.		MODEL NO.
JAPAN:VEP83410A		
NTSC:VEP83410C		
PAL:VEP83410B		SCM041

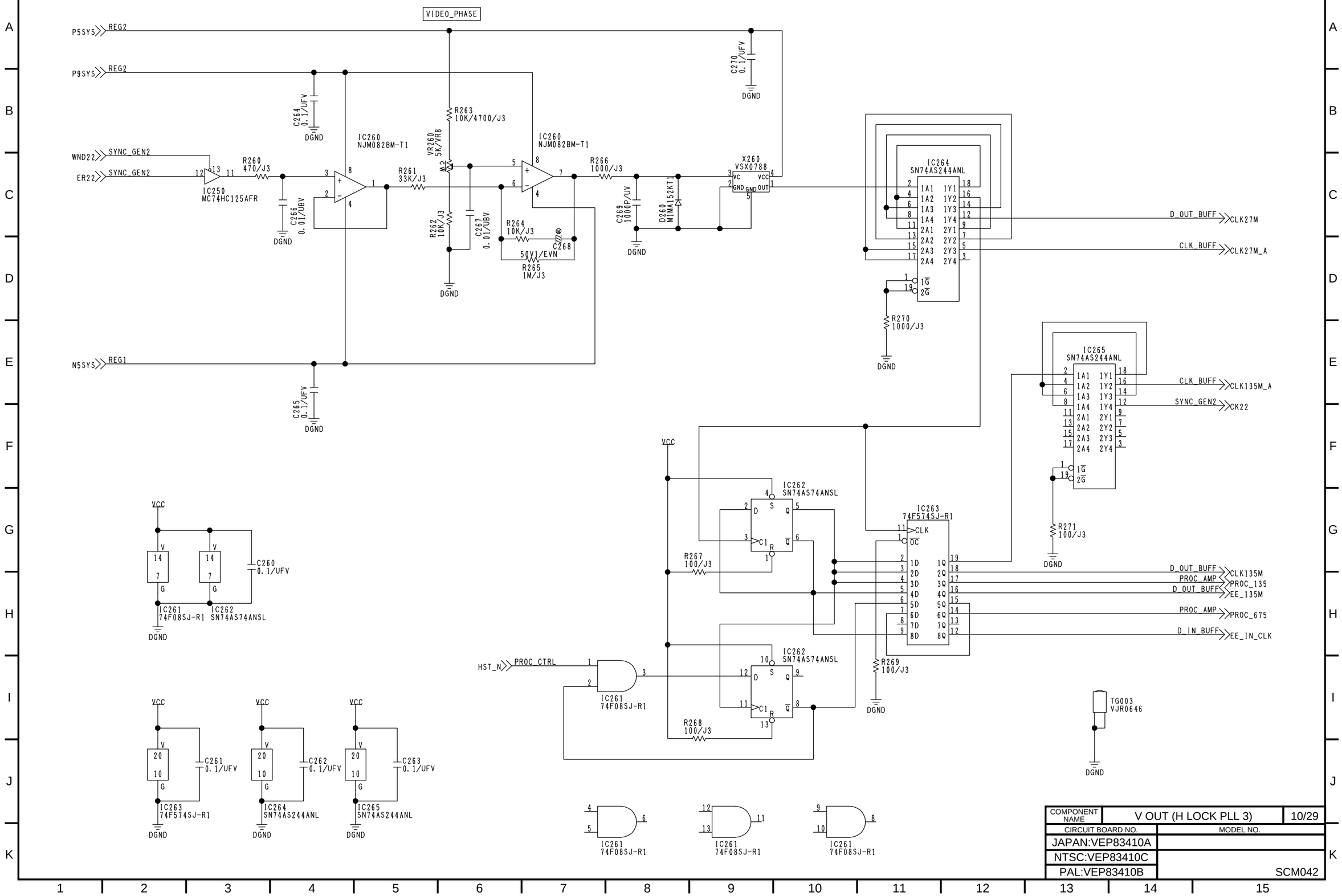

COMPONENT NAME	V OUT (H LOCK PLL 3)	10/29
CIRCUIT BOARD NO.	MODEL NO.	
JAPAN:VEP83410A		
NTSC:VEP83410C		SCM042
PAL:VEP83410B		

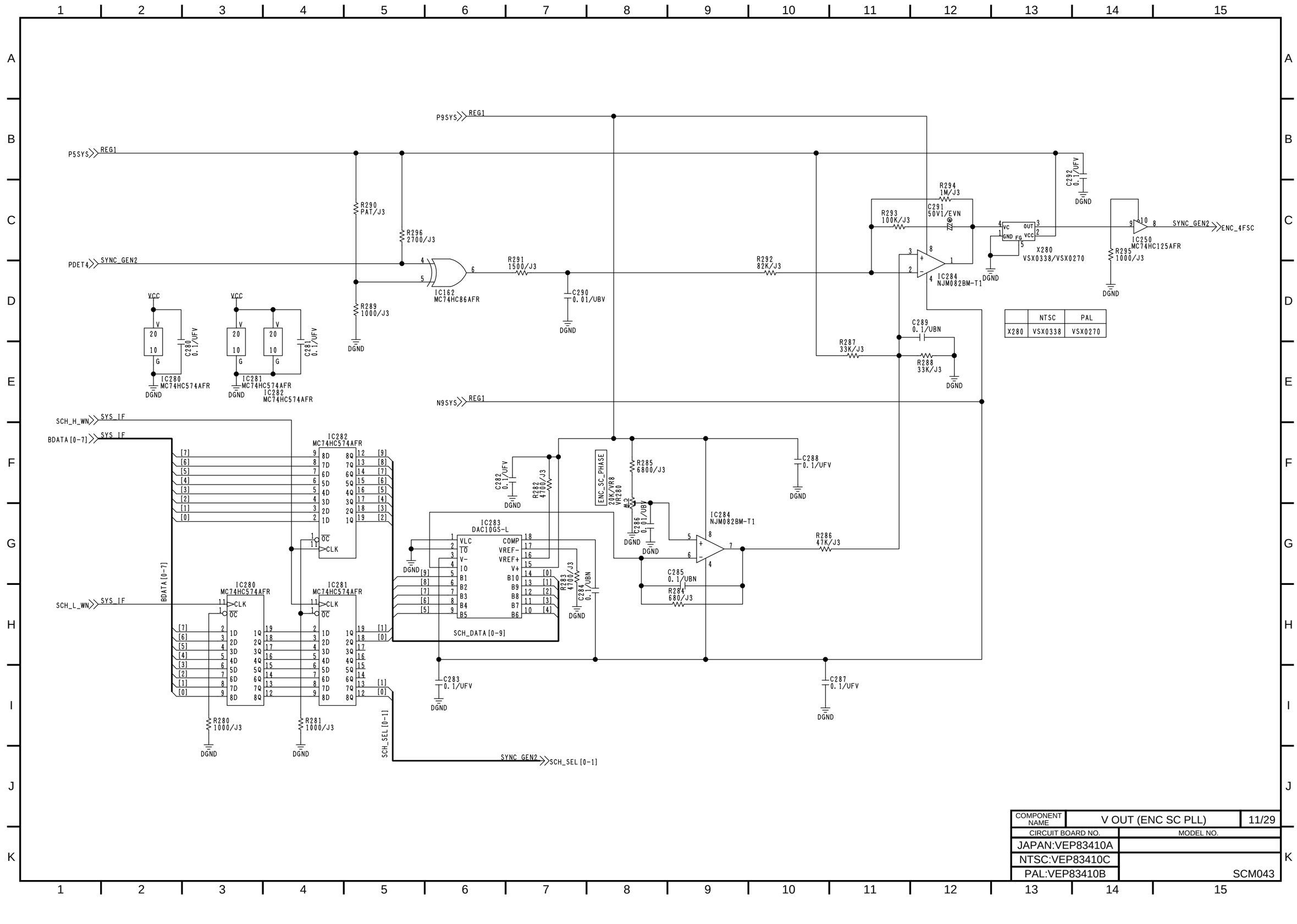

	NTSC	PAL
X280	VSX0338	VSX0270

COMPONENT NAME	V OUT (ENC SC PLL)	11/29
CIRCUIT BOARD NO.	MODEL NO.	
JAPAN:VEP83410A		
NTSC:VEP83410C		
PAL:VEP83410B		SCM043

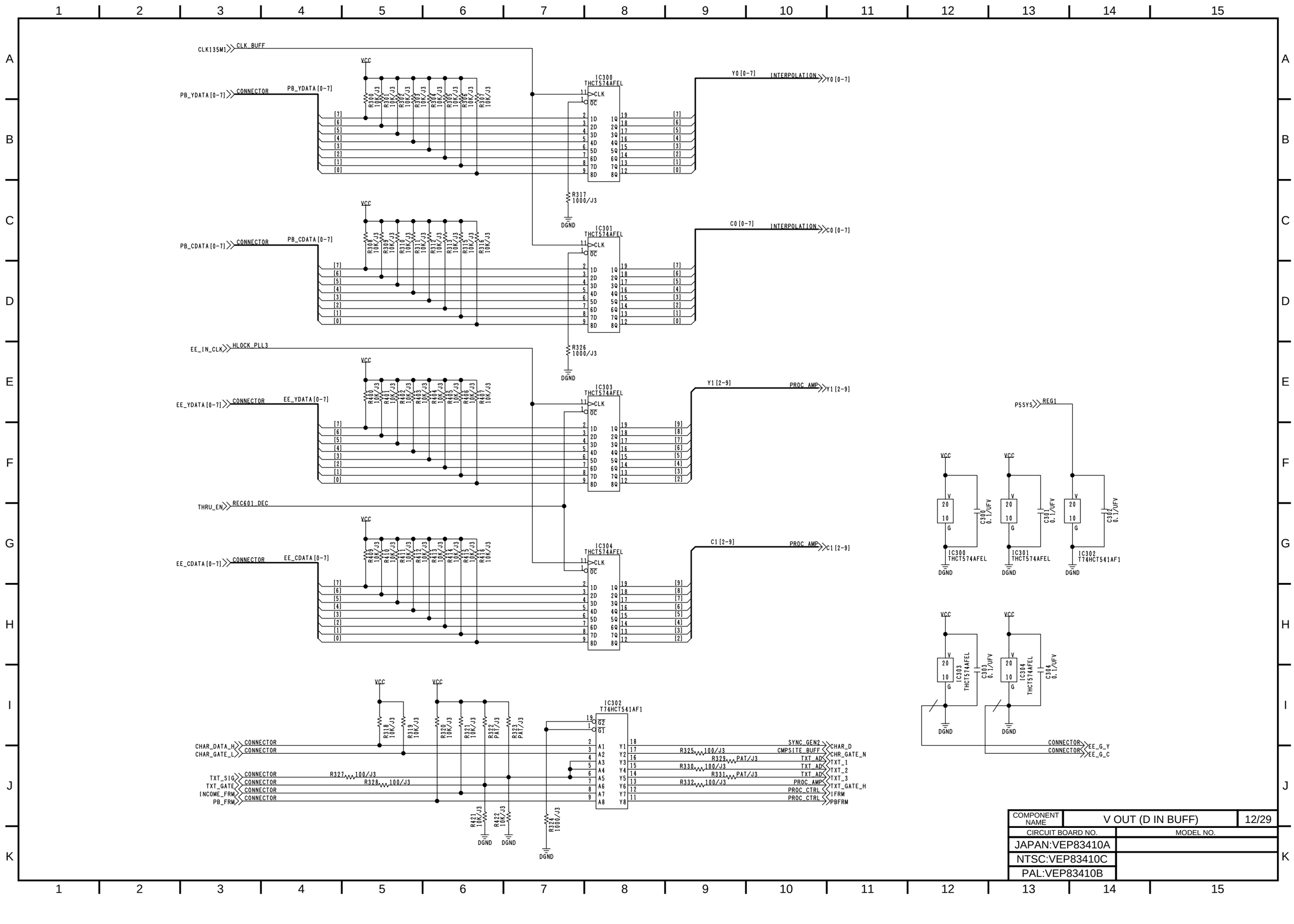

COMPONENT NAME	V OUT (D IN BUFF)	12/29
CIRCUIT BOARD NO.	MODEL NO.	
JAPAN:VEP83410A		
NTSC:VEP83410C		
PAL:VEP83410B		

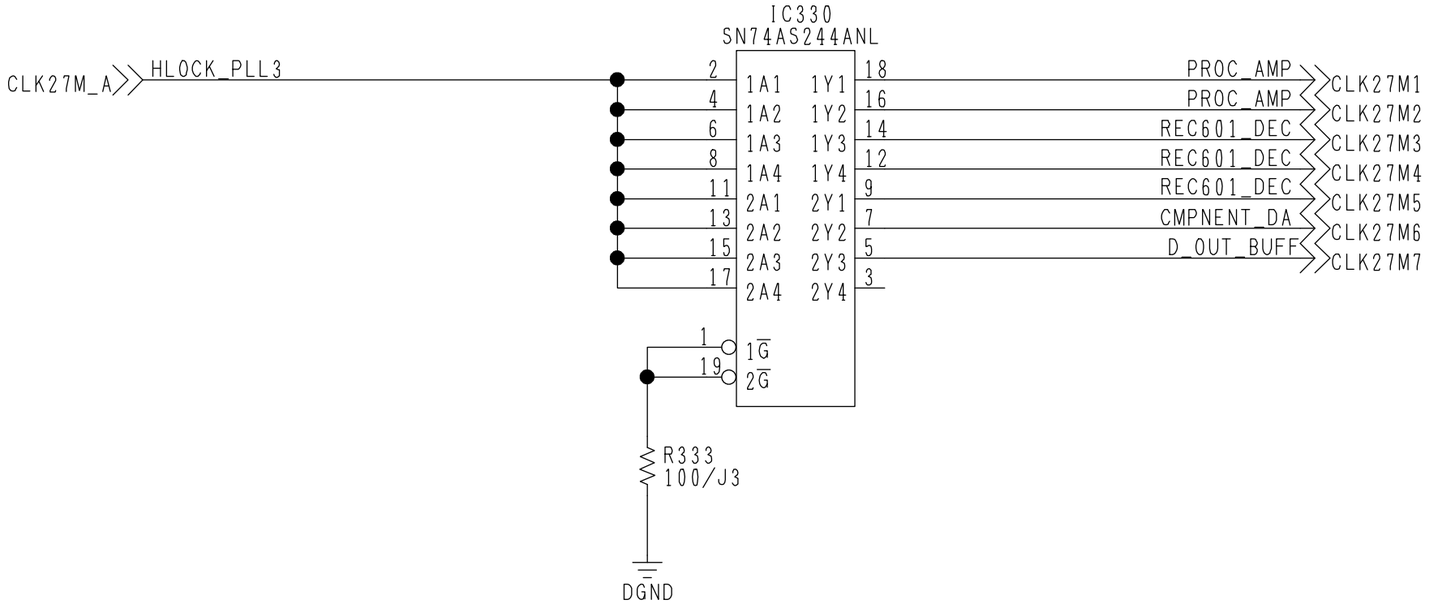

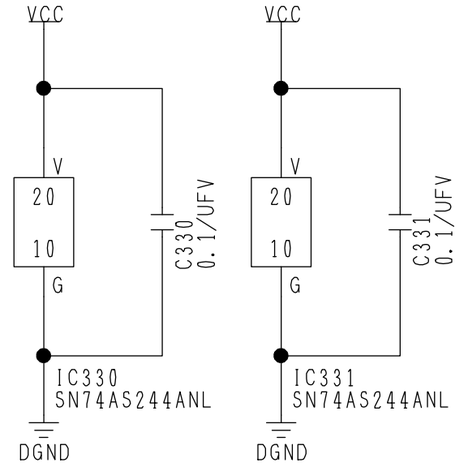

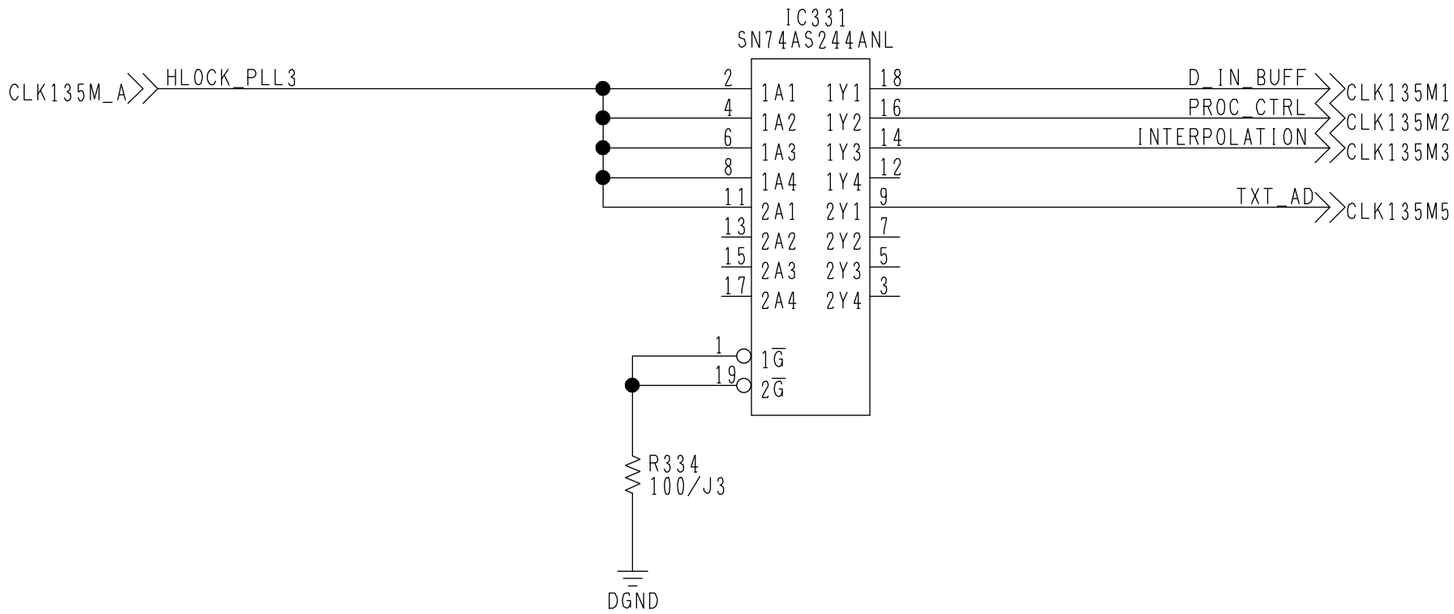

COMPONENT NAME	V OUT (CLK BUFF)	13/29
CIRCUIT BOARD NO.	MODEL NO.	
JAPAN:VEP83410A		
NTSC:VEP83410C		
PAL:VEP83410B		SCM045

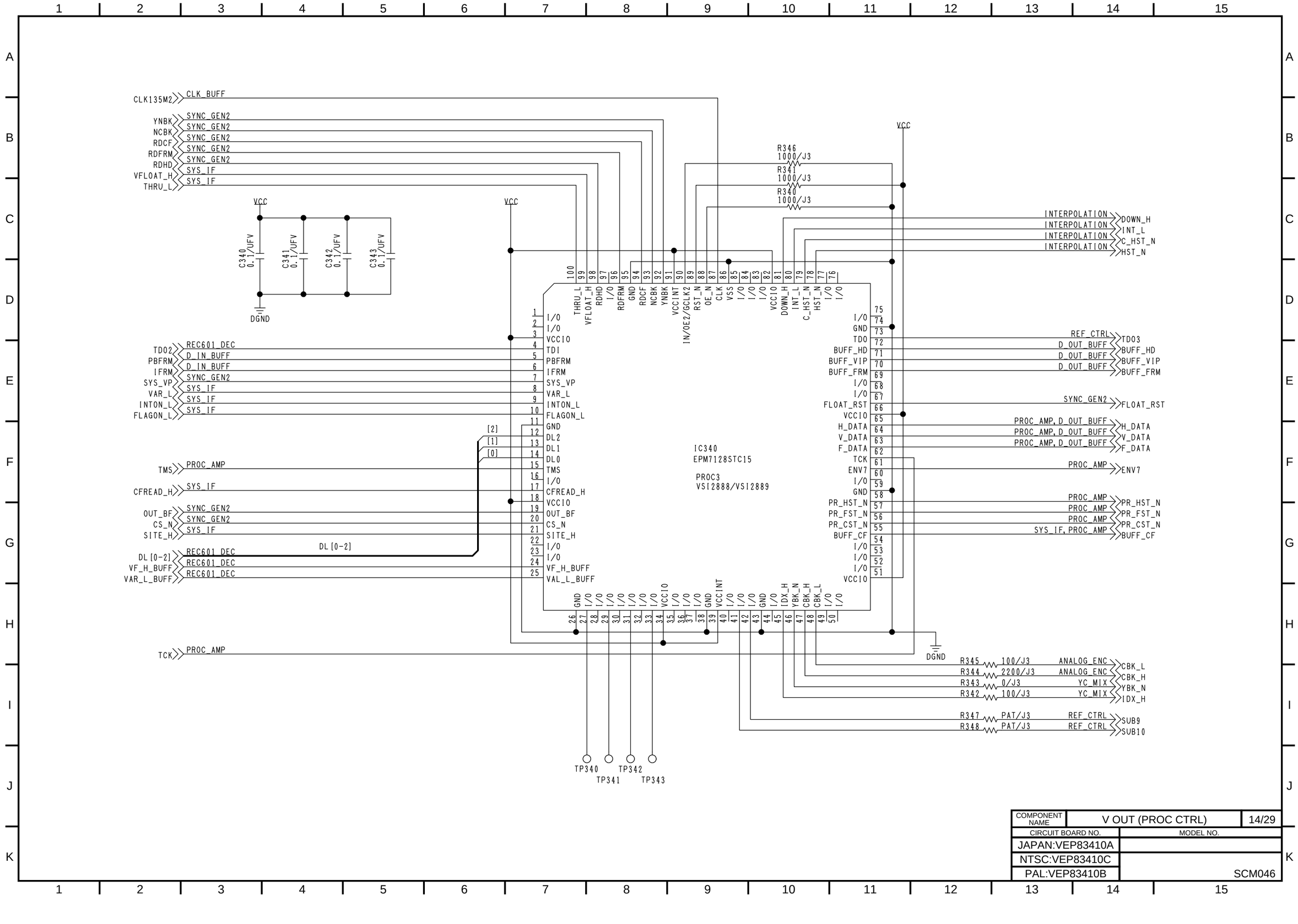

COMPONENT NAME	V OUT (PROC CTRL)	14/29
CIRCUIT BOARD NO.	MODEL NO.	
JAPAN:VEP83410A		
NTSC:VEP83410C		SCM046
PAL:VEP83410B		

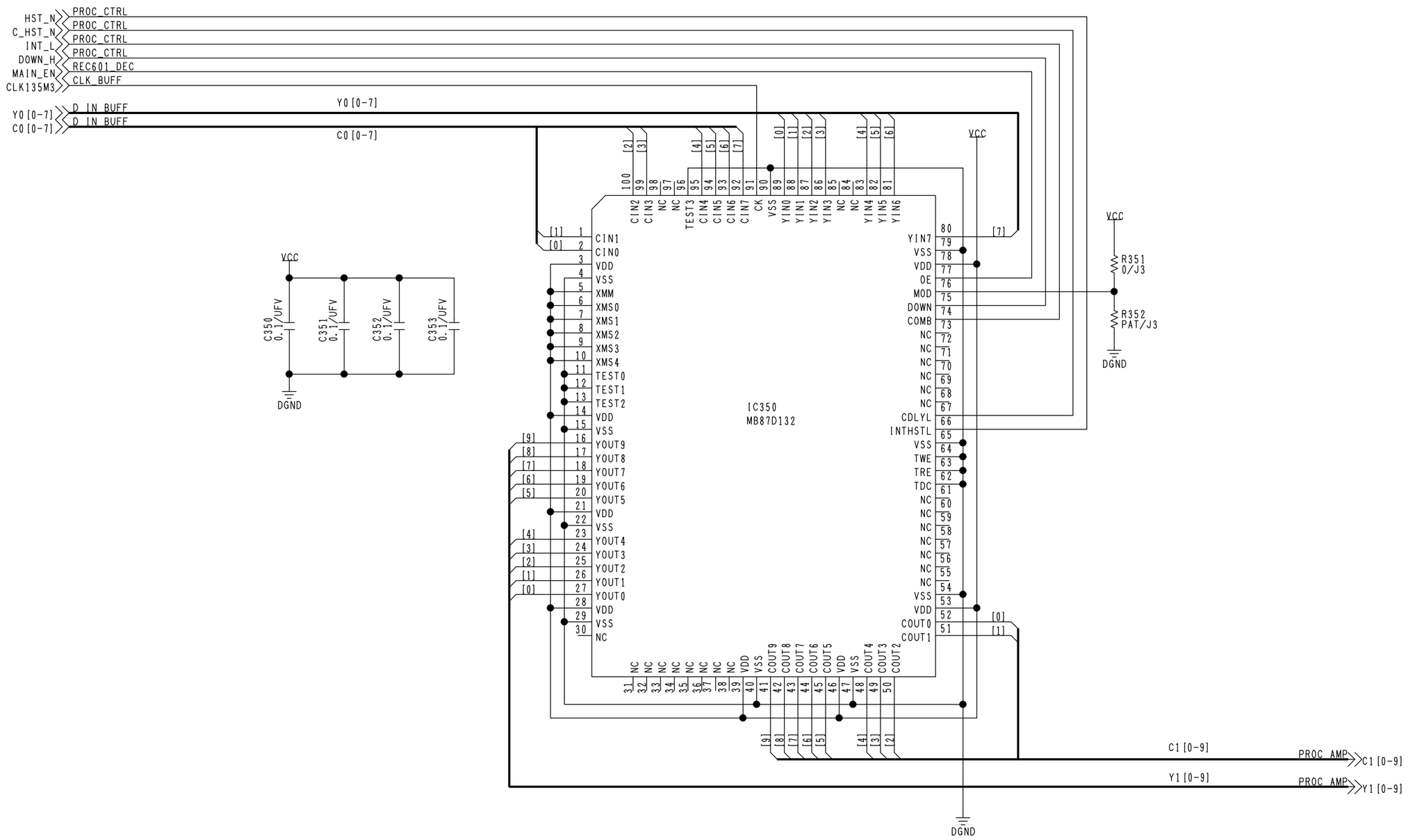

COMPONENT NAME	V OUT (INTER PORATION)	15/29
CIRCUIT BOARD NO.	MODEL NO.	
JAPAN:VEP83410A		
NTSC:VEP83410C		SCM047
PAL:VEP83410B		

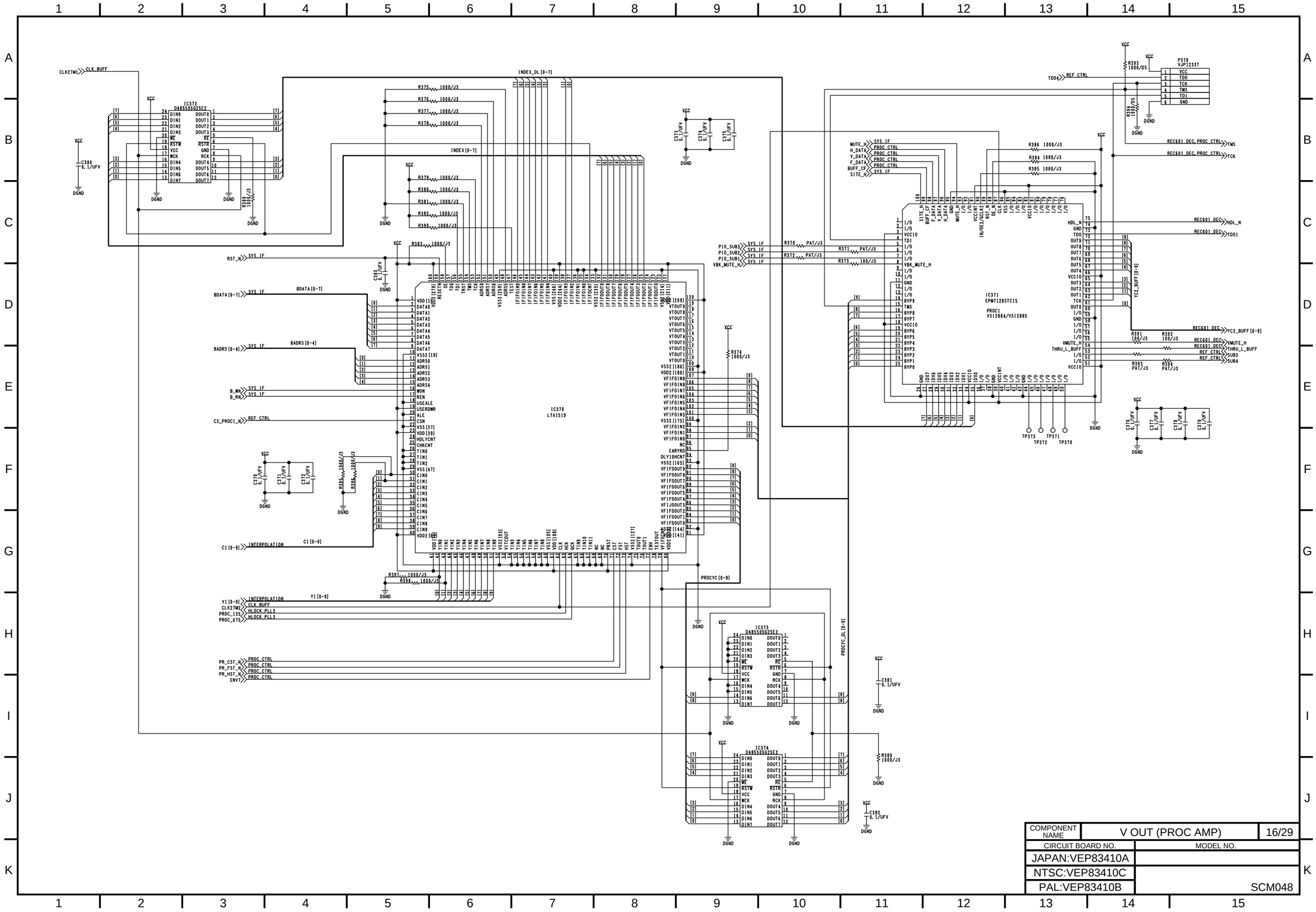

COMPONENT NAME	V OUT (PROC AMP)	16/29
CIRCUIT BOARD NO.	MODEL NO.	
JAPAN:VEP83410A		
NTSC:VEP83410C		
PAL:VEP83410B	SCM048	

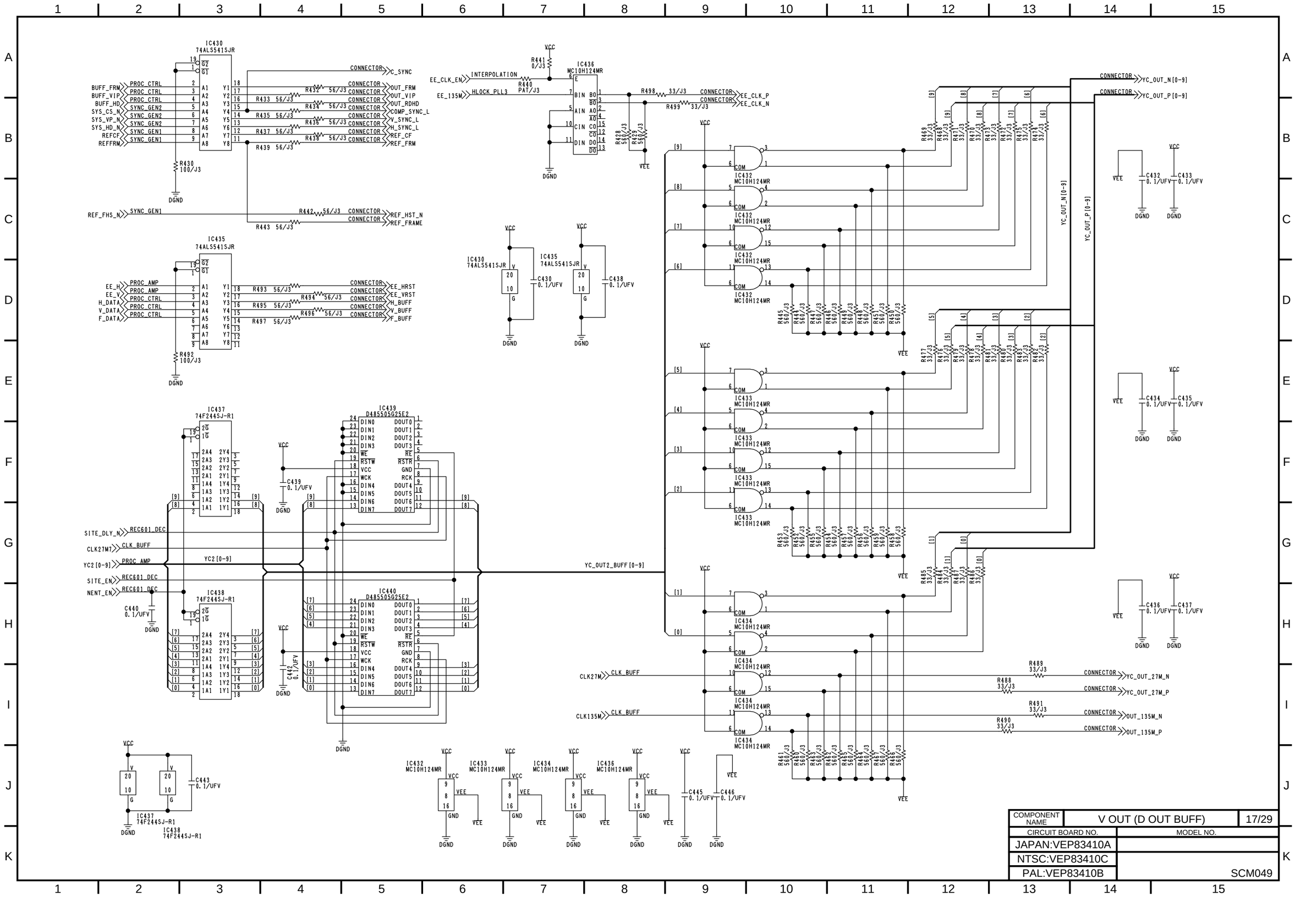

COMPONENT NAME	V OUT (D OUT BUFF)
	17/29
CIRCUIT BOARD NO.	MODEL NO.
JAPAN:VEP83410A	
NTSC:VEP83410C	
PAL:VEP83410B	SCM049

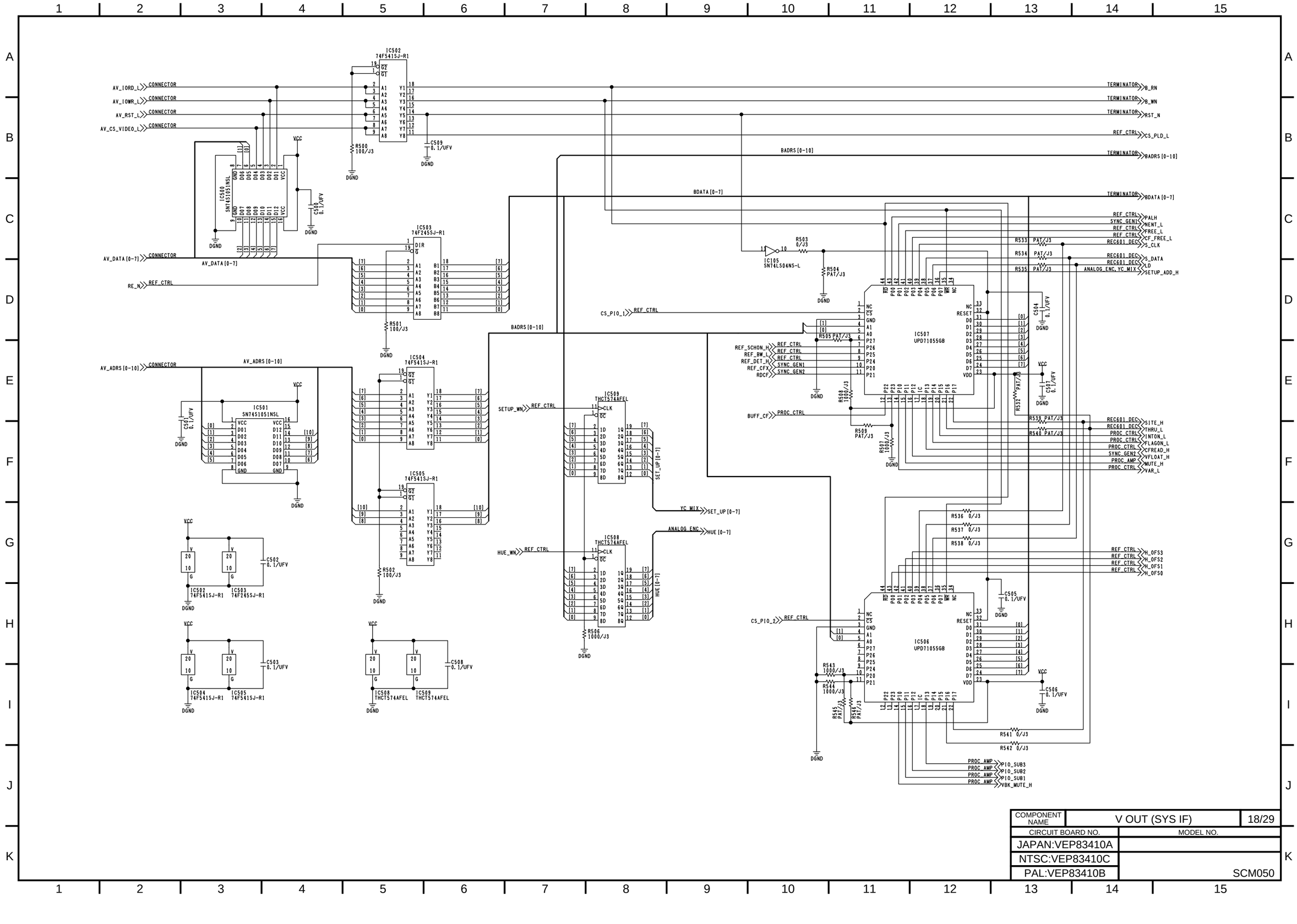

COMPONENT NAME	V OUT (SYS IF)	18/29
CIRCUIT BOARD NO.	MODEL NO.	
JAPAN:VEP83410A		
NTSC:VEP83410C		
PAL:VEP83410B		SCM050

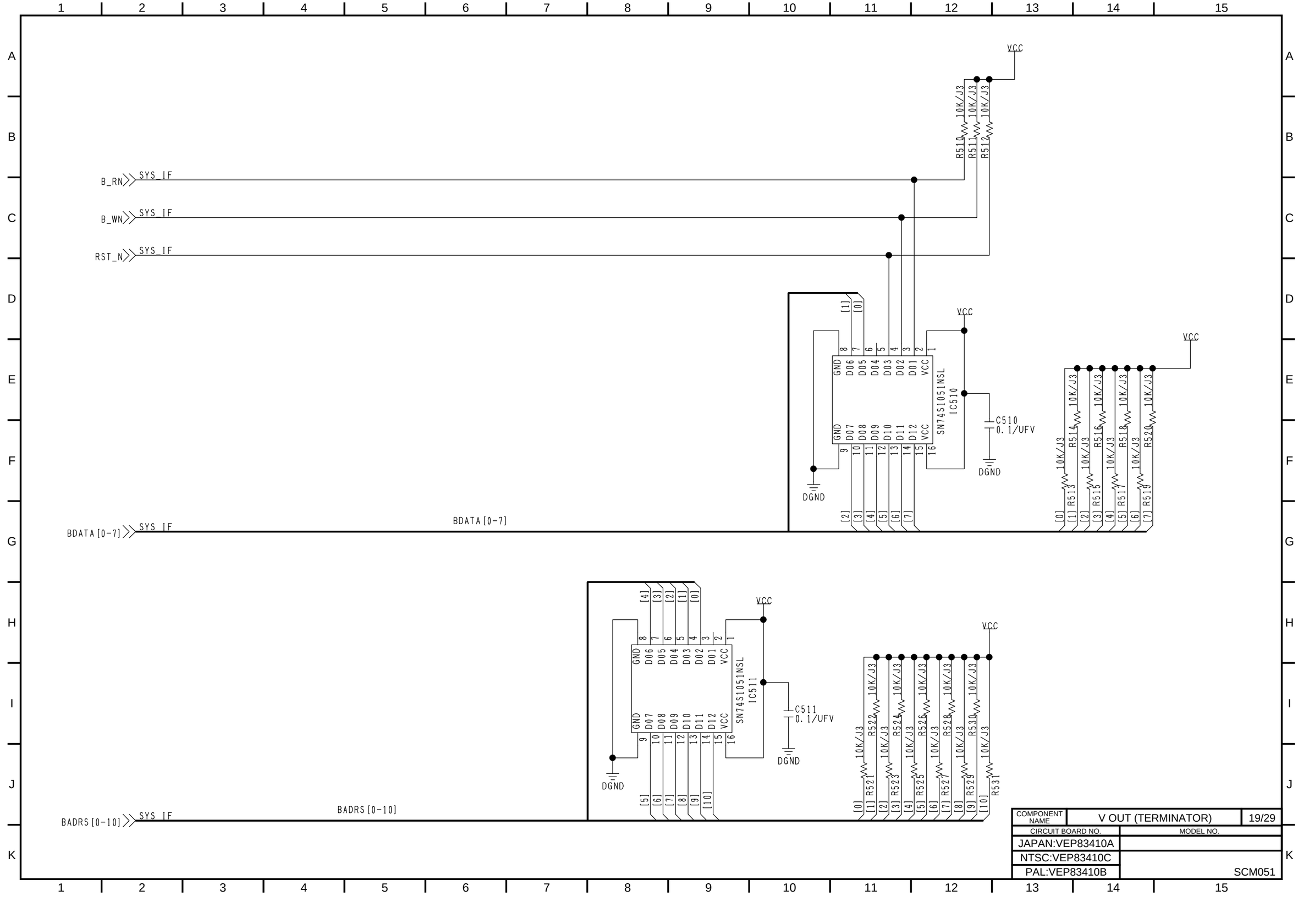

COMPONENT NAME	V OUT (TERMINATOR)	19/29
CIRCUIT BOARD NO.	MODEL NO.	
JAPAN:VEP83410A		
NTSC:VEP83410C		
PAL:VEP83410B		SCM051

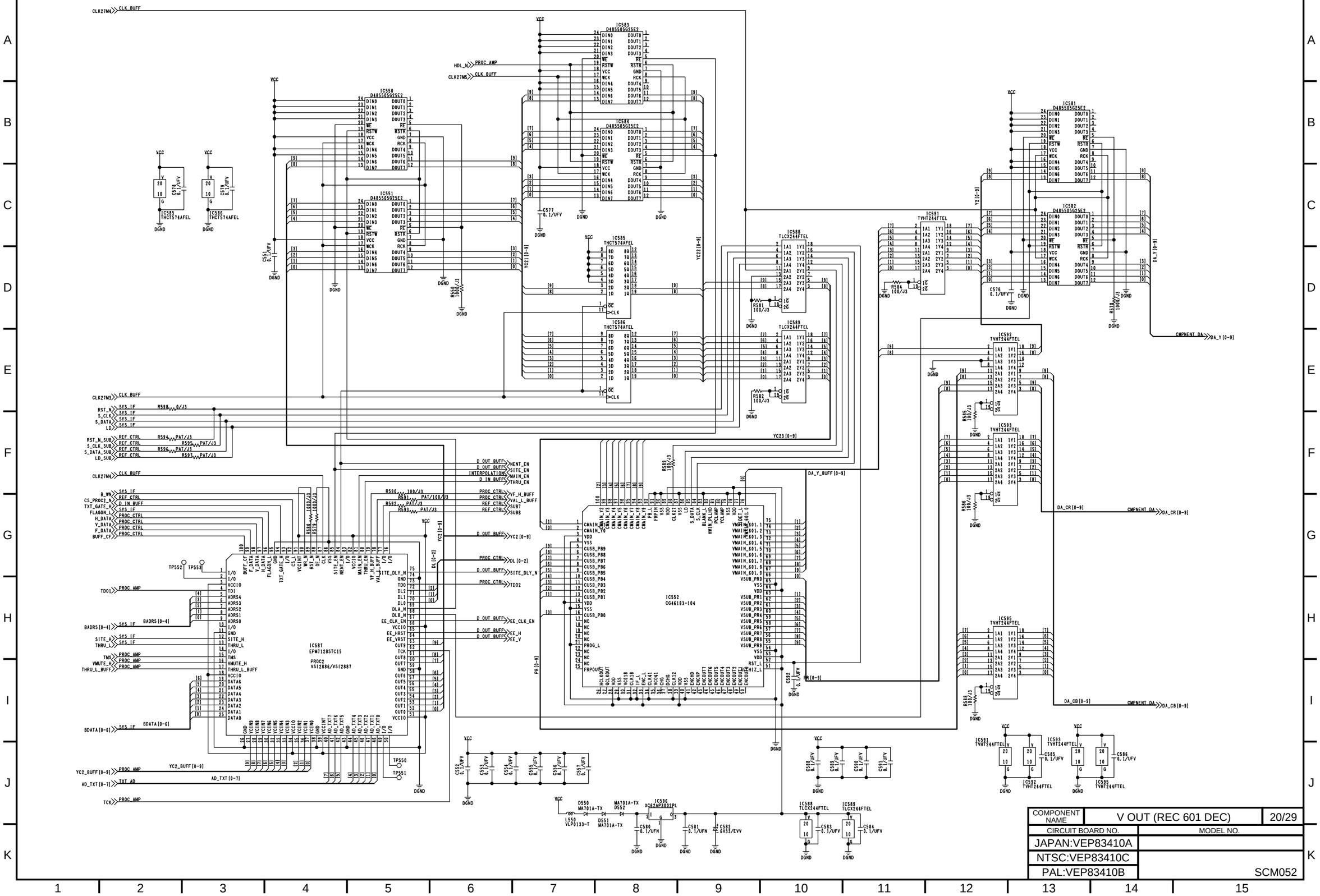

COMPONENT NAME	V OUT (REC 601 DEC)	20/29
CIRCUIT BOARD NO.	MODEL NO.	
JAPAN:VEP83410A		
NTSC:VEP83410C		
PAL:VEP83410B		SCM052

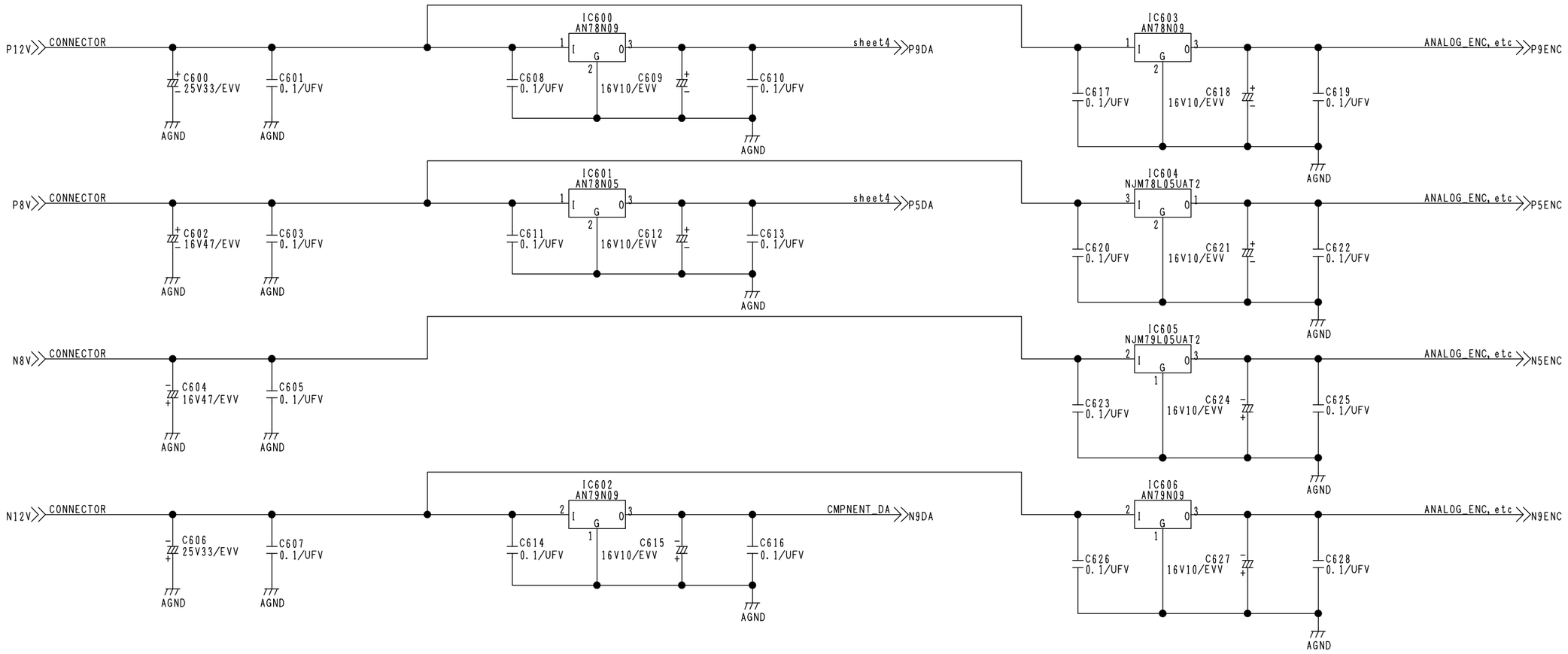

COMPONENT NAME	V OUT (REG 2)	21/29
CIRCUIT BOARD NO.	MODEL NO.	
JAPAN:VEP83410A		
NTSC:VEP83410C		
PAL:VEP83410B		SCM053

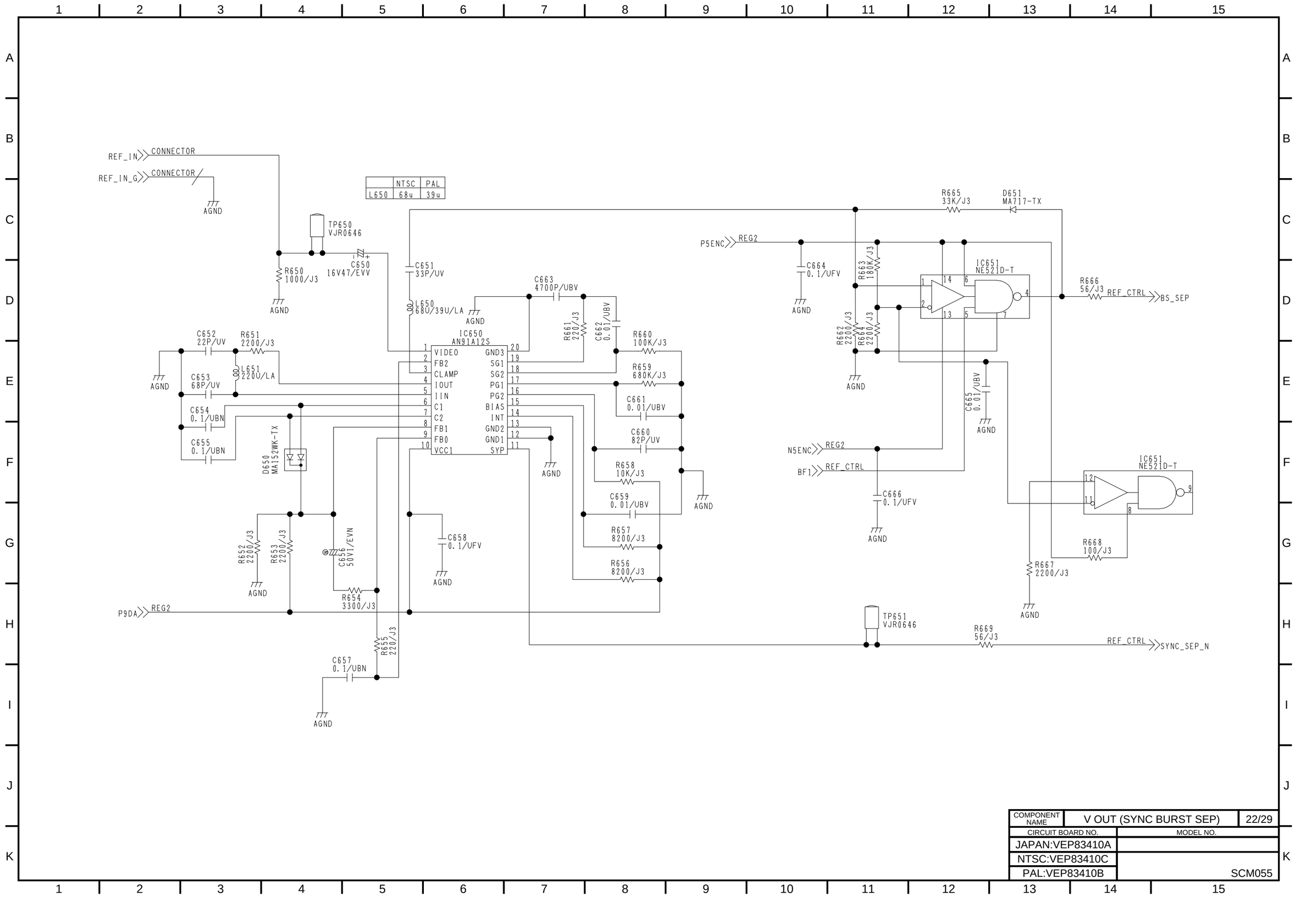

	NTSC	PAL
L650	68u	39u

COMPONENT NAME	V OUT (SYNC BURST SEP)	22/29
CIRCUIT BOARD NO.		MODEL NO.
JAPAN:VEP83410A		
NTSC:VEP83410C		
PAL:VEP83410B		SCM055

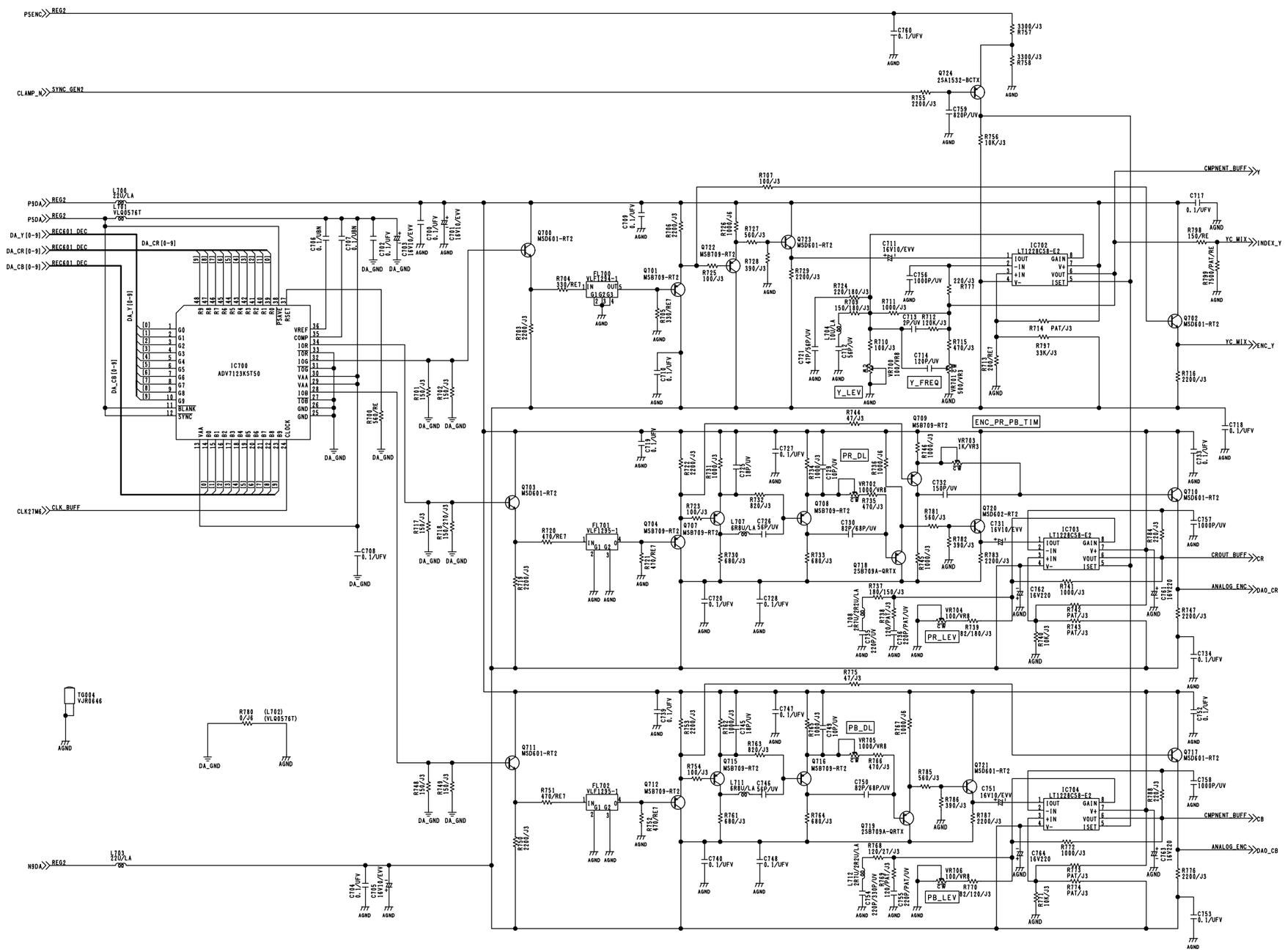

COMPONENT NAME	V OUT (COMPONENT DA)
23/29	
CIRCUIT BOARD NO.	MODEL NO.
JAPAN:VEP83410A	
NTSC:VEP83410C	
PAL:VEP83410B	SCM055

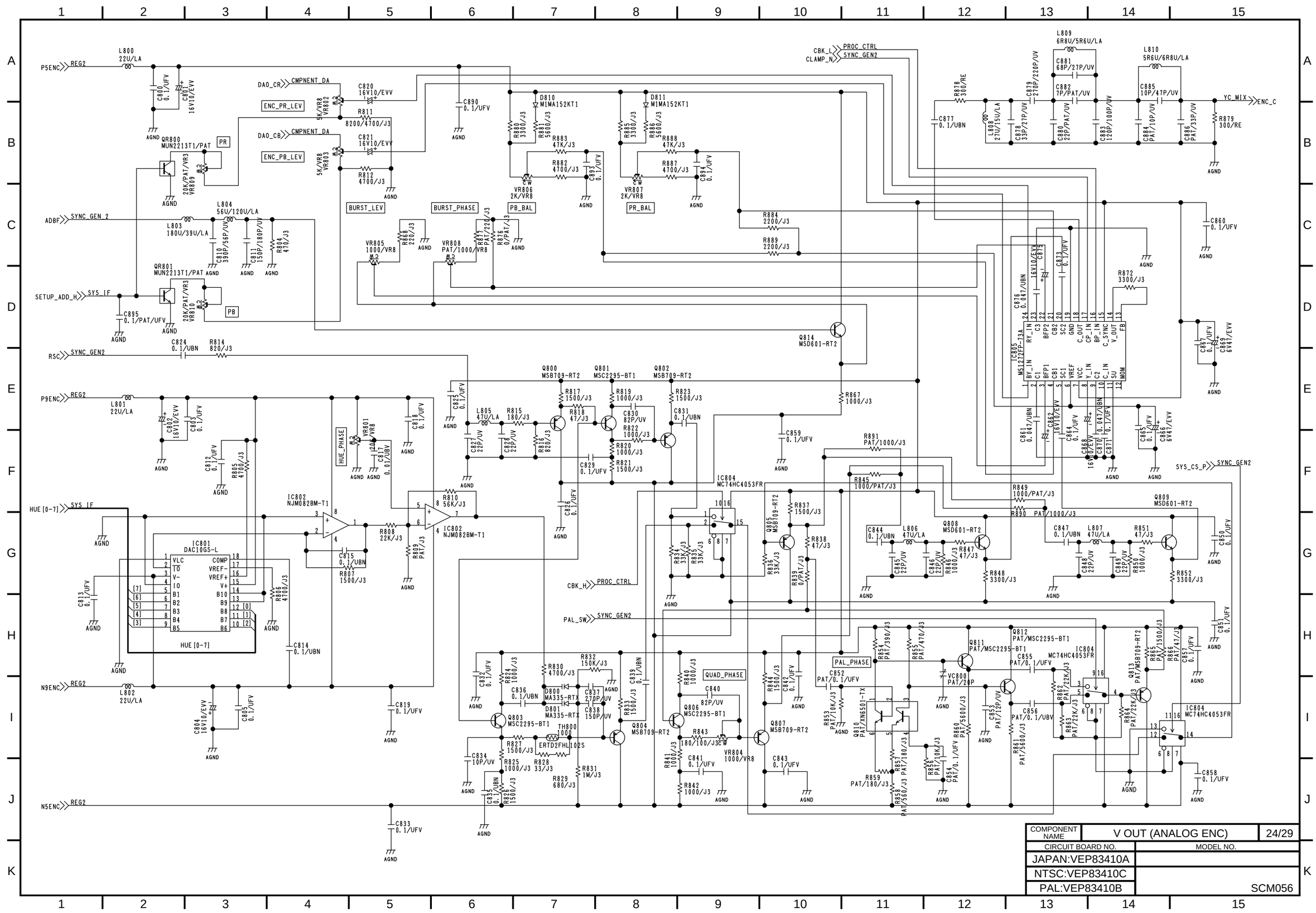

COMPONENT NAME	V OUT (ANALOG ENC)	24/29
CIRCUIT BOARD NO.	MODEL NO.	
JAPAN:VEP83410A		
NTSC:VEP83410C		
PAL:VEP83410B		

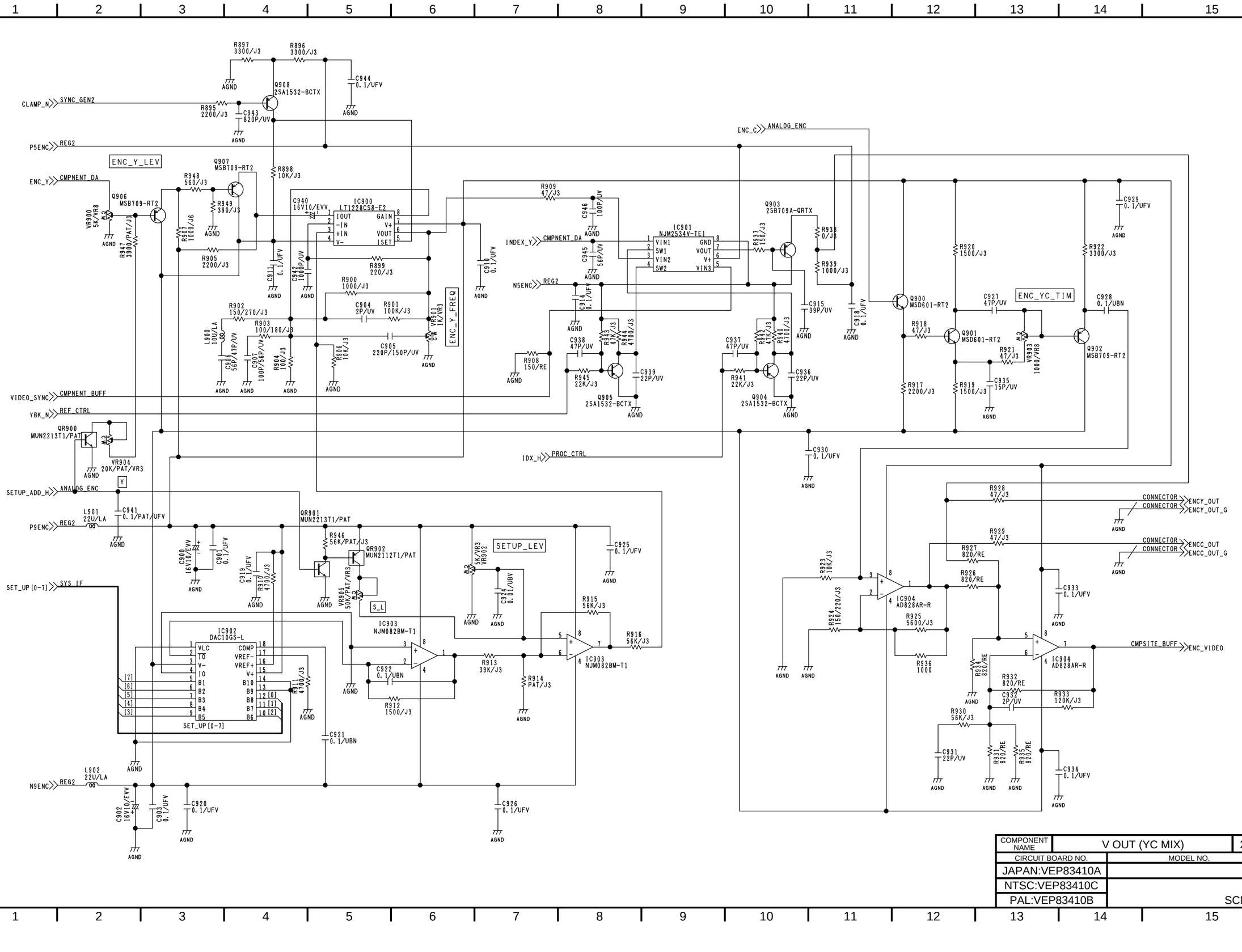

COMPONENT NAME	V OUT (YC MIX)	25/29
CIRCUIT BOARD NO.	MODEL NO.	
JAPAN:VEP83410A		
NTSC:VEP83410C		SCM057
PAL:VEP83410B		

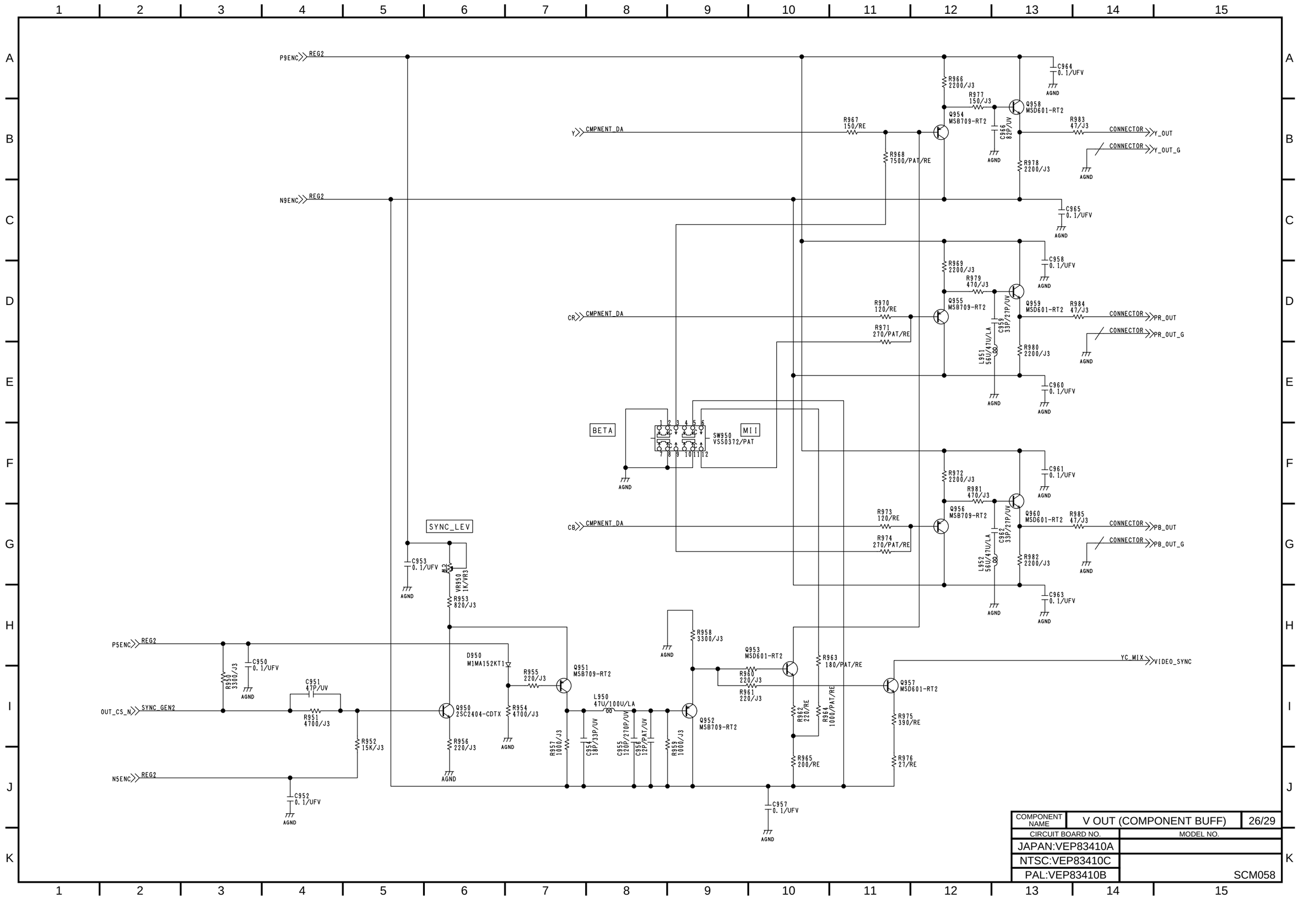
P9ENC
REG2
N9ENC
REG2
Y
CMPNENT_DA
CR
CMPNENT_DA
CB
CMPNENT_DA
R966 2200/J3
R977 150/J3
Q958 MSD601-RT2
Q954 MSB709-RT2
R967 150/RE
R968 7500/PAT/RE
C964 0.1/UFV
C966 820/UV
R983 47/J3
CONNECTOR
Y_OUT
CONNECTOR
Y_OUT_G
R978 2200/J3
C965 0.1/UFV
R969 2200/J3
R979 470/J3
Q955 MSB709-RT2
R970 120/RE
R971 270/PAT/RE
C958 0.1/UFV
Q959 MSD601-RT2
R984 47/J3
CONNECTOR
PR_OUT
CONNECTOR
PR_OUT_G
C959 33P/27P/UV
L951 560/471U/LA
R980 2200/J3
C960 0.1/UFV
BETA
MII
SW950 VSS0372/PAT
R972 2200/J3
R981 470/J3
Q956 MSB709-RT2
R973 120/RE
R974 270/PAT/RE
C961 0.1/UFV
Q960 MSD601-RT2
R985 47/J3
CONNECTOR
PB_OUT
CONNECTOR
PB_OUT_G
C962 33P/27P/UV
L952 560/471U/LA
R982 2200/J3
C963 0.1/UFV
SYNC_LEV
C953 0.1/UFV
VR950 1K/VR3
R953 820/J3
P5ENC
REG2
R950 3300/J3
C950 0.1/UFV
C951 47P/UV
OUT_CS_N
SYNC_GEN2
R951 4700/J3
R952 15K/J3
N5ENC
REG2
C952 0.1/UFV
D950 M1MA152KT1
Q950 2SC2404-CDTX
R955 220/J3
Q951 MSB709-RT2
R954 4700/J3
R956 220/J3
L950 47U/100U/LA
R957 1000/J3
C954 18P/33P/UV
C955 120P/270P/UV
C956 12P/PAT/UV
R959 1000/J3
Q952 MSB709-RT2
R958 3300/J3
Q953 MSD601-RT2
R960 220/J3
R961 220/J3
R962 220/RE
R965 200/RE
R963 180/PAT/RE
R964 1000/PAT/RE
C957 0.1/UFV
Q957 MSD601-RT2
R975 390/RE
R976 27/RE
YC_MIX
VIDEO_SYNC
AGND
COMPONENT NAME
V OUT (COMPONENT BUFF)
26/29
CIRCUIT BOARD NO.
MODEL NO.
JAPAN:VEP83410A
NTSC:VEP83410C
PAL:VEP83410B
SCM058

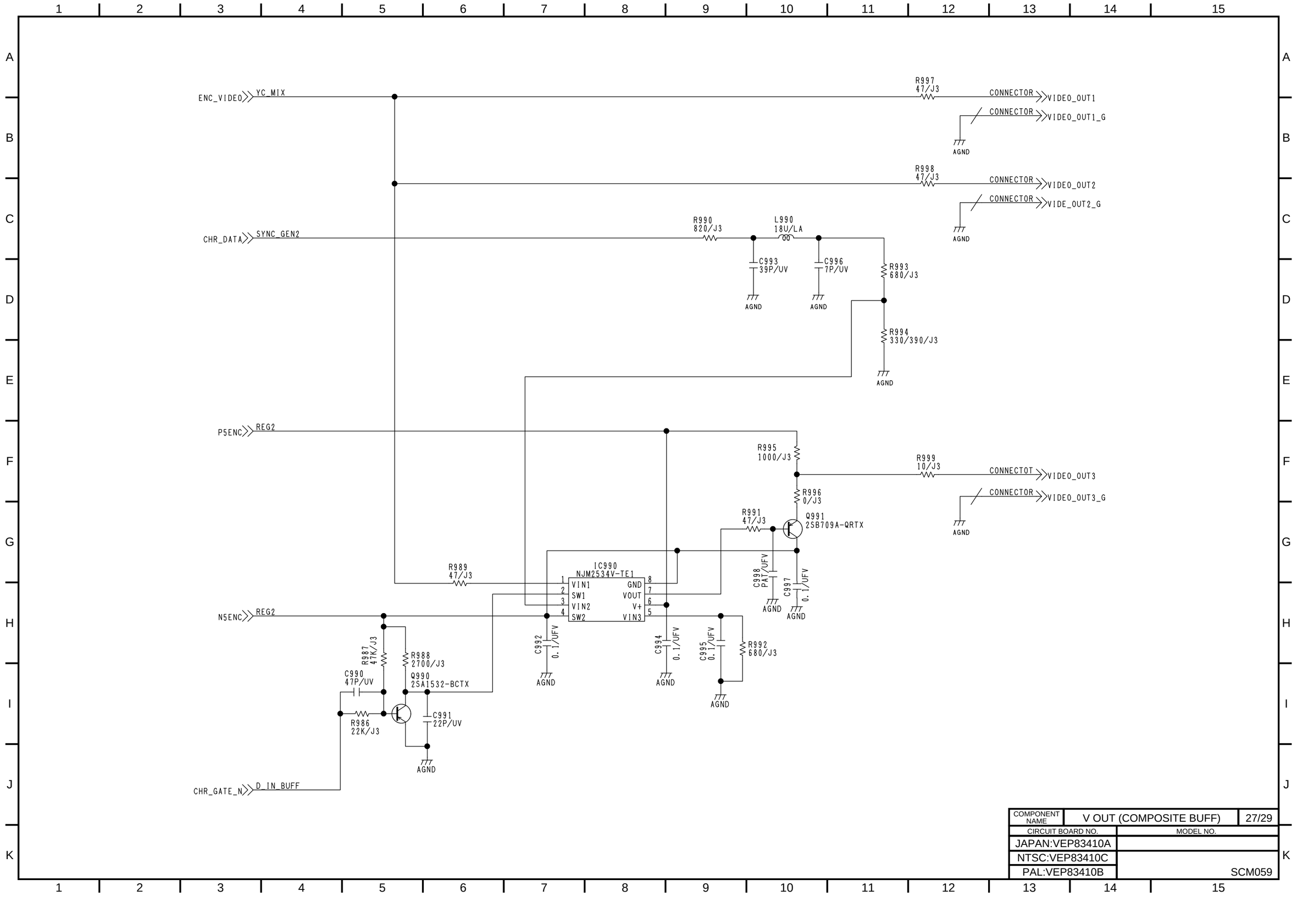

COMPONENT NAME	V OUT (COMPOSITE BUFF)	27/29
CIRCUIT BOARD NO.	MODEL NO.	
JAPAN:VEP83410A		
NTSC:VEP83410C		SCM059
PAL:VEP83410B		

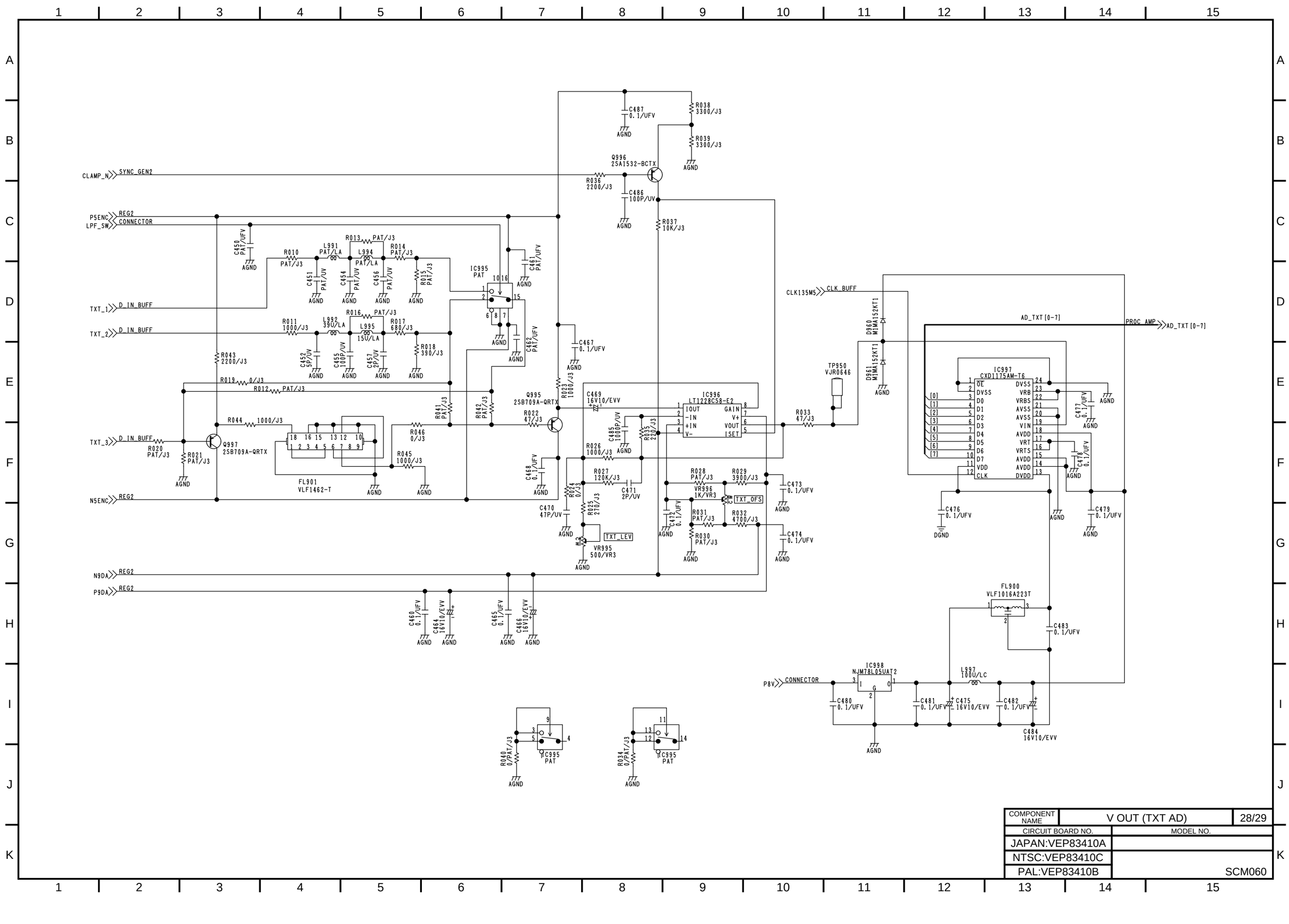

COMPONENT NAME	V OUT (TXT AD)	28/29
CIRCUIT BOARD NO.	MODEL NO.	
JAPAN:VEP83410A		
NTSC:VEP83410C		
PAL:VEP83410B		SCM060

Ref No.	NTSC-OVERSEAS	NTSC-JAPAN	PAL
C090	-----	-----	ECUV1H151JCV
C107	ECUV1H102JV	ECUV1H102JV	ECUV1H181JCV
C150	-----	-----	ECUV1E104ZFV
C151	-----	-----	ECUV1E104ZFV
C152	-----	-----	ECUV1H103KBV
C153	-----	-----	ECUV1H103KBV
C154	-----	-----	ECEV1HN010QR
C155	-----	-----	ECUV1H102JCV
C156	-----	-----	ECUV1E104ZFV
C157	-----	-----	ECUV1E104ZFV
C166	ECUV1H470JCV	ECUV1H470JCV	ECUV1H270JCV
C167	ECUV1H470JCV	ECUV1H470JCV	ECUV1H270JCV
C250	-----	-----	ECUV1E104ZFV
C251	-----	-----	ECUV1E104ZFV
C252	-----	-----	ECUV1H103KBV
C253	-----	-----	ECUV1H103KBV
C254	-----	-----	ECEV1HN010QR
C255	-----	-----	ECUV1H102JCV
C256	-----	-----	ECUV1E104ZFV
C721	ECUV1H470JCV	ECUV1H470JCV	ECUV1H560JCV
C730	ECUV1H820JCV	ECUV1H820JCV	ECUV1H680JCV
C736	ECUV1H221JCV	ECUV1H221JCV	-----
C750	ECUV1H820JCV	ECUV1H820JCV	ECUV1H680JCV
C754	ECUV1H221JCV	ECUV1H221JCV	ECUV1H331JCV
C755	ECUV1H221JCV	ECUV1H221JCV	-----
C810	ECUV1H391JCV	ECUV1H391JCV	ECUV1H560JCV
C811	ECUV1H151JCV	ECUV1H151JCV	ECUV1H181JCV
C852	-----	-----	ECUV1E104ZFV
C853	-----	-----	ECUV1H120JCV
C854	-----	-----	ECUV1E104ZFV
C855	-----	-----	ECUV1E104ZFV
C856	-----	-----	ECUV1C104KBV
C878	ECUV1H330JCV	ECUV1H330JCV	ECUV1H270JCV
C879	ECUV1H271JCV	ECUV1H271JCV	ECUV1H221JCV
C880	ECUV1H220JCV	ECUV1H220JCV	-----
C881	ECUV1H680JCV	ECUV1H680JCV	ECUV1H270JCV
C882	ECUV1H070DCV	ECUV1H070DCV	-----
C883	ECUV1H121JCV	ECUV1H121JCV	ECUV1H101JCV
C884	-----	-----	ECUV1H100DCV
C885	ECUV1H100DCV	ECUV1H100DCV	ECUV1H470JCV
C886	-----	-----	ECUV1H330JCV
C895	ECUV1E104ZFV	-----	-----
C905	ECUV1H221JCV	ECUV1H221JCV	ECUV1H151JCV
C906	ECUV1H560JCV	ECUV1H560JCV	ECUV1H470JCV
C907	ECUV1H101JCV	ECUV1H101JCV	ECUV1H560JCV
C941	ECUV1E104ZFV	-----	-----
C954	ECUV1H180JCV	ECUV1H180JCV	ECUV1H330JCV
C955	ECUV1H121JCV	ECUV1H121JCV	ECUV1H271JCV
C956	ECUV1H120JCV	ECUV1H120JCV	-----
C959	ECUV1H330JCV	ECUV1H330JCV	ECUV1H270JCV
C962	ECUV1H330JCV	ECUV1H330JCV	ECUV1H270JCV
D150	-----	-----	M1MA152KT1
D250	-----	-----	M1MA152KT1
IC150	-----	-----	MC74HC125AFR
IC151	-----	-----	NJM082BM-T1
IC251	-----	-----	NJM082BM-T1
IC340	VSI2888	VSI2888	VSI2889
IC371	VSI2884	VSI2884	VSI2885
IC587	VSI2886	VSI2886	VSI2887

Ref No.	NTSC-OVERSEAS	NTSC-JAPAN	PAL
L650	VLQ0163J680	VLQ0163J680	VLQ0163J390
L708	VLQ0163J2R7	VLQ0163J2R7	VLQ0163J2R2
L712	VLQ0163J2R7	VLQ0163J2R7	VLQ0163J2R2
L803	VLQ0163J181	VLQ0163J181	VLQ0163J390
L804	VLQ0163J560	VLQ0163J560	VLQ0163J121
L808	VLQ0163J270	VLQ0163J270	VLQ0163J150
L809	VLQ0163J6R8	VLQ0163J6R8	VLQ0163J5R6
L810	VLQ0163J5R6	VLQ0163J5R6	VLQ0163J6R8
L950	VLQ0163J470	VLQ0163J470	VLQ0163J101
L951	VLQ0163J560	VLQ0163J560	VLQ0163J470
L952	VLQ0163J560	VLQ0163J560	VLQ0163J470
Q810	-----	-----	XN6501-TX
Q811	-----	-----	MSC2295-BT1
Q812	-----	-----	MSC2295-BT1
Q813	-----	-----	MSB709-RT2
QR800	MUN2213T1	-----	-----
QR801	MUN2213T1	-----	-----
QR900	MUN2213T1	-----	-----
QR901	MUN2213T1	-----	-----
QR902	MUN2112T1	-----	-----
R057	ERJ3GEYJ101V	ERJ3GEYJ101V	-----
R059	ERJ3GEYJ101V	ERJ3GEYJ101V	-----
R070	ERJ3GEYJ153V	ERJ3GEYJ153V	ERJ3GEYJ183V
R076	ERJ3GEYJ821V	ERJ3GEYJ821V	ERJ3GEYJ471V
R077	ERJ3GEYJ223V	ERJ3GEYJ223V	ERJ3GEYJ153V
R095	-----	-----	ERJ3GEYJ102V
R096	-----	-----	ERJ3GEYJ102V
R097	-----	-----	ERJ3GEYJ102V
R099	-----	-----	ERJ3GEYJ222V
R131	ERJ3GEYJ822V	ERJ3GEYJ822V	ERJ3GEYJ562V
R132	ERJ3GEYJ153V	ERJ3GEYJ153V	ERJ3GEYJ332V
R140	ERJ3GEY0R00V	ERJ3GEY0R00V	-----
R141	-----	-----	ERJ3GEY0R00V
R150	-----	-----	ERJ3GEYJ471V
R151	-----	-----	ERJ3GEYJ333V
R152	-----	-----	ERJ3GEYJ103V
R153	-----	-----	ERJ3GEYJ103V
R154	-----	-----	ERJ3GEYJ223V
R155	-----	-----	ERJ3GEYJ105V
R156	-----	-----	ERJ3GEYJ102V
R157			ERJ3GEYJ102V
R158	ERJ3GEYJ102V	ERJ3GEYJ102V	-----
R242	ERJ6RBD822V	ERJ6RBD822V	ERJ6RBD682V
R243	ERJ3GEYJ102V	ERJ3GEYJ102V	ERJ3GEYJ222V
R245	-----	-----	ERJ3GEY0R00V
R250	-----	-----	ERJ3GEYJ471V
R251	-----	-----	ERJ3GEYJ333V
R252	-----	-----	ERJ3GEYJ103V
R253	-----	-----	ERJ3GEYJ103V
R254	-----	-----	ERJ3GEYJ332V
R255	-----	-----	ERJ3GEYJ105V
R256	-----	-----	ERJ3GEYJ102V
R258	ERJ3GEYJ102V	ERJ3GEYJ102V	-----
R263	ERJ3GEYJ103V	ERJ3GEYJ103V	ERJ3GEYJ472V
R591	-----	-----	ERJ3GEYJ101V
R709	ERJ3GEYJ151V	ERJ3GEYJ151V	ERJ3GEYJ181V
R718	ERJ3GEYJ151V	ERJ3GEYJ151V	ERJ3GEYJ271V
R724	ERJ3GEYJ221V	ERJ3GEYJ221V	ERJ3GEYJ181V
R737	ERJ3GEYJ181V	ERJ3GEYJ181V	ERJ3GEYJ151V

Ref No.	NTSC-OVERSEAS	NTSC-JAPAN	PAL
R738	ERJ3GEYJ121V	ERJ3GEYJ121V	-----
R739	ERJ3GEYJ820V	ERJ3GEYJ820V	ERJ3GEYJ181V
R768	ERJ3GEYJ121V	ERJ3GEYJ121V	ERJ3GEYJ270V
R769	ERJ3GEYJ121V	ERJ3GEYJ121V	-----
R770	ERJ3GEYJ820V	ERJ3GEYJ820V	ERJ3GEYJ121V
R799	ERJ6RBD752V	ERJ6RBD752V	-----
R811	ERJ3GEYJ822V	ERJ3GEYJ822V	ERJ3GEYJ472V
R839	ERJ3GEY0R00V	ERJ3GEY0R00V	-----
R843	ERJ3GEYJ181V	ERJ3GEYJ181V	ERJ3GEYJ101V
R845	ERJ3GEYJ102V	ERJ3GEYJ102V	-----
R849	ERJ3GEYJ102V	ERJ3GEYJ102V	-----
R853	-----	-----	ERJ3GEYJ103V
R854	-----	-----	ERJ3GEYJ391V
R855	-----	-----	ERJ3GEYJ471V
R856	-----	-----	ERJ3GEYJ103V
R857	-----	-----	ERJ3GEYJ181V
R858	-----	-----	ERJ3GEYJ561V
R859	-----	-----	ERJ3GEYJ181V
R860	-----	-----	ERJ3GEYJ562V
R861	-----	-----	ERJ3GEYJ562V
R862	-----	-----	ERJ3GEYJ223V
R863	-----	-----	ERJ3GEYJ223V
R864	-----	-----	ERJ3GEYJ223V
R865	-----	-----	ERJ3GEYJ152V
R866	-----	-----	ERJ3GEYJ470V
R876	ERJ3GEY0R00V	ERJ3GEY0R00V	-----
R877	-----	-----	ERJ3GEYJ221V
R890	-----	-----	ERJ3GEYJ102V
R891	-----	-----	ERJ3GEYJ102V
R902	ERJ3GEYJ151V	ERJ3GEYJ151V	ERJ3GEYJ271V
R903	ERJ3GEYJ101V	ERJ3GEYJ101V	ERJ3GEYJ181V
R924	ERJ3GEYJ151V	ERJ3GEYJ151V	ERJ3GEYJ221V
R946	ERJ3GEYJ563V	-----	-----
R947	ERJ3GEYJ392V	-----	-----
R963	ERJ6RBD181V	ERJ6RBD181V	-----
R964	ERJ6RBD102V	ERJ6RBD102V	-----
R968	ERJ6RBD752V	ERJ6RBD752V	-----
R971	ERJ6RBD271V	ERJ6RBD271V	-----
R974	ERJ6RBD271V	ERJ6RBD271V	-----
R994	ERJ3GEYJ331V	ERJ3GEYJ331V	ERJ3GEYJ391V
SW950	VSS0372	VSS0372	-----
VC800	-----	-----	ECV1ZW20X53T
VR808	-----	-----	VRV0161B102T
VR809	VRV0113B203T	-----	-----
VR810	VRV0113B203T	-----	-----
VR904	VRV0113B203T	-----	-----
VR905	VRV0113B503T	-----	-----
X070	VSX0081	VSX0081	VSX0363
X150	-----	-----	VSX0567A
X160	VSX0338	VSX0338	VSX0270
X250	-----	-----	VSX0567A
X280	VSX0338	VSX0338	VSX0270

COMPONENT NAME	V OUT (COMPARISON CHART)	29/29
CIRCUIT BOARD NO.	MODEL NO.	
JAPAN:VEP83410A		
NTSC:VEP83410C		
PAL:VEP83410B		SCM061

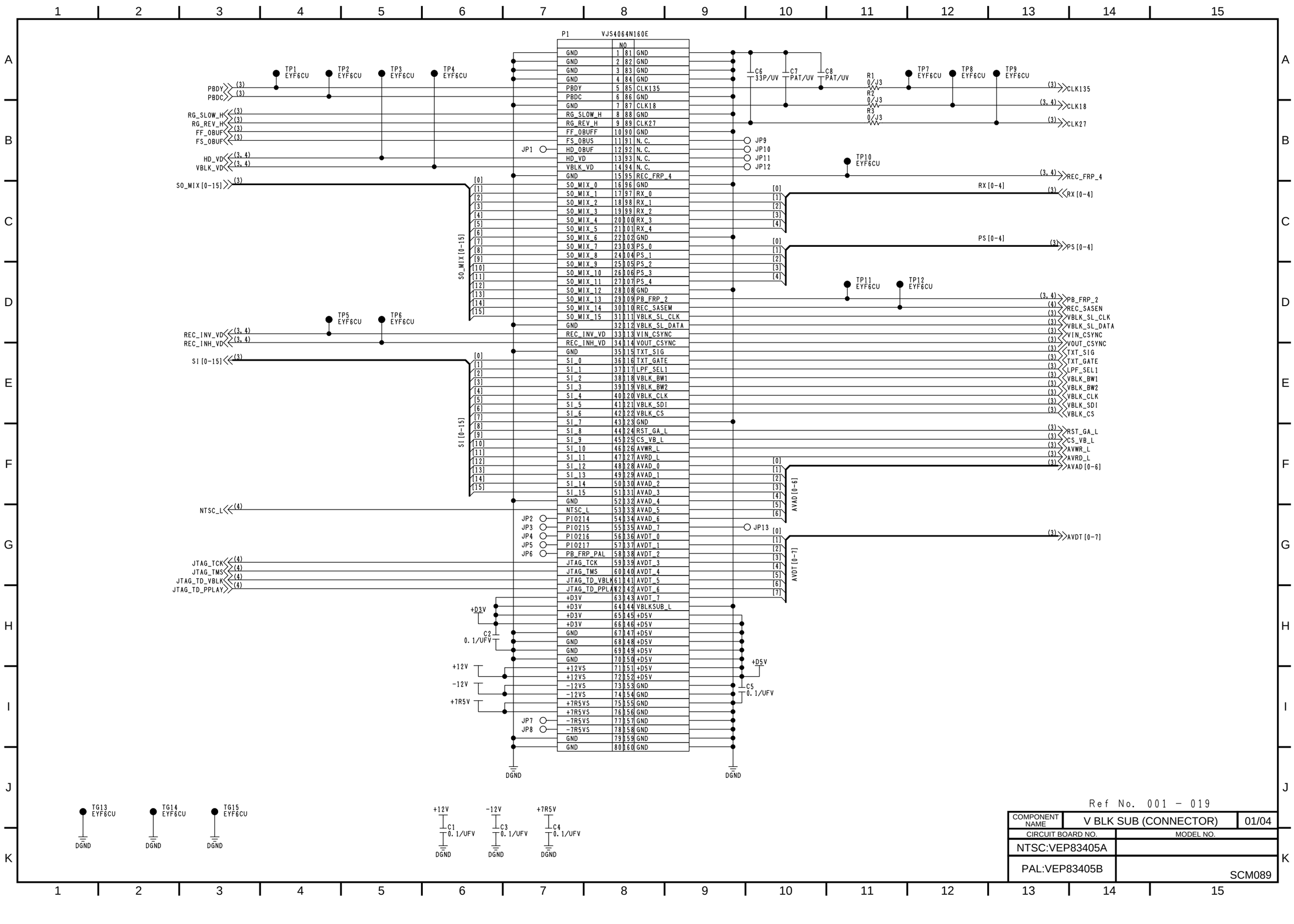
P1 VJS4064N160E
GND 1 81 GND
GND 2 82 GND
GND 3 83 GND
GND 4 84 GND
PBDY 5 85 CLK135
PBDC 6 86 GND
GND 7 87 CLK18
RG_SLOW_H 8 88 GND
RG_REV_H 9 89 CLK27
FF_OBUFF 10 90 GND
FS_OBUS 11 91 N.C.
HD_OBUF 12 92 N.C.
HD_VD 13 93 N.C.
VBLK_VD 14 94 N.C.
GND 15 95 REC_FRP_4
SO_MIX_0 16 96 GND
SO_MIX_1 17 97 RX_0
SO_MIX_2 18 98 RX_1
SO_MIX_3 19 99 RX_2
SO_MIX_4 20 100 RX_3
SO_MIX_5 21 101 RX_4
SO_MIX_6 22 102 GND
SO_MIX_7 23 103 PS_0
SO_MIX_8 24 104 PS_1
SO_MIX_9 25 105 PS_2
SO_MIX_10 26 106 PS_3
SO_MIX_11 27 107 PS_4
SO_MIX_12 28 108 GND
SO_MIX_13 29 109 PB_FRP_2
SO_MIX_14 30 110 REC_SASEM
SO_MIX_15 31 111 VBLK_SL_CLK
GND 32 112 VBLK_SL_DATA
REC_INV_VD 33 113 VIN_CSYNC
REC_INH_VD 34 114 VOUT_CSYNC
GND 35 115 TXT_SIG
SI_0 36 116 TXT_GATE
SI_1 37 117 LPF_SEL1
SI_2 38 118 VBLK_BW1
SI_3 39 119 VBLK_BW2
SI_4 40 120 VBLK_CLK
SI_5 41 121 VBLK_SDI
SI_6 42 122 VBLK_CS
SI_7 43 123 GND
SI_8 44 124 RST_GA_L
SI_9 45 125 CS_VB_L
SI_10 46 126 AVWR_L
SI_11 47 127 AVRD_L
SI_12 48 128 AVAD_0
SI_13 49 129 AVAD_1
SI_14 50 130 AVAD_2
SI_15 51 131 AVAD_3
GND 52 132 AVAD_4
NTSC_L 53 133 AVAD_5
PIO214 54 134 AVAD_6
PIO215 55 135 AVAD_7
PIO216 56 136 AVDT_0
PIO217 57 137 AVDT_1
PB_FRP_PAL 58 138 AVDT_2
JTAG_TCK 59 139 AVDT_3
JTAG_TMS 60 140 AVDT_4
JTAG_TD_VBLK 61 141 AVDT_5
JTAG_TD_PPLAY 62 142 AVDT_6
+D3V 63 143 AVDT_7
+D3V 64 144 VBLKSUB_L
+D3V 65 145 +D5V
+D3V 66 146 +D5V
GND 67 147 +D5V
GND 68 148 +D5V
GND 69 149 +D5V
GND 70 150 +D5V
+12VS 71 151 +D5V
+12VS 72 152 +D5V
-12VS 73 153 GND
-12VS 74 154 GND
+7R5VS 75 155 GND
+7R5VS 76 156 GND
-7R5VS 77 157 GND
-7R5VS 78 158 GND
GND 79 159 GND
GND 80 160 GND
TP1 EYF6CU
TP2 EYF6CU
TP3 EYF6CU
TP4 EYF6CU
TP5 EYF6CU
TP6 EYF6CU
TP7 EYF6CU
TP8 EYF6CU
TP9 EYF6CU
TP10 EYF6CU
TP11 EYF6CU
TP12 EYF6CU
PBDY
PBDC
RG_SLOW_H
RG_REV_H
FF_OBUF
FS_OBUS
HD_VD
VBLK_VD
SO_MIX[0-15]
REC_INV_VD
REC_INH_VD
SI[0-15]
NTSC_L
JTAG_TCK
JTAG_TMS
JTAG_TD_VBLK
JTAG_TD_PPLAY
JP1
JP2
JP3
JP4
JP5
JP6
JP7
JP8
JP9
JP10
JP11
JP12
JP13
C6 33P/UV
C7 PAT/UV
C8 PAT/UV
R1 0/J3
R2 0/J3
R3 0/J3
C2 0.1/UFV
C5 0.1/UFV
C1 0.1/UFV
C3 0.1/UFV
C4 0.1/UFV
+D3V
+D5V
+12V
-12V
+7R5V
DGND
CLK135
CLK18
CLK27
REC_FRP_4
RX[0-4]
PS[0-4]
PB_FRP_2
REC_SASEN
VBLK_SL_CLK
VBLK_SL_DATA
VIN_CSYNC
VOUT_CSYNC
TXT_SIG
TXT_GATE
LPF_SEL1
VBLK_BW1
VBLK_BW2
VBLK_CLK
VBLK_SDI
VBLK_CS
RST_GA_L
CS_VB_L
AVWR_L
AVRD_L
AVAD[0-6]
AVDT[0-7]
TG13 EYF6CU
TG14 EYF6CU
TG15 EYF6CU
Ref No. 001 - 019
COMPONENT NAME
V BLK SUB (CONNECTOR)
01/04
CIRCUIT BOARD NO.
MODEL NO.
NTSC:VEP83405A
PAL:VEP83405B
SCM089

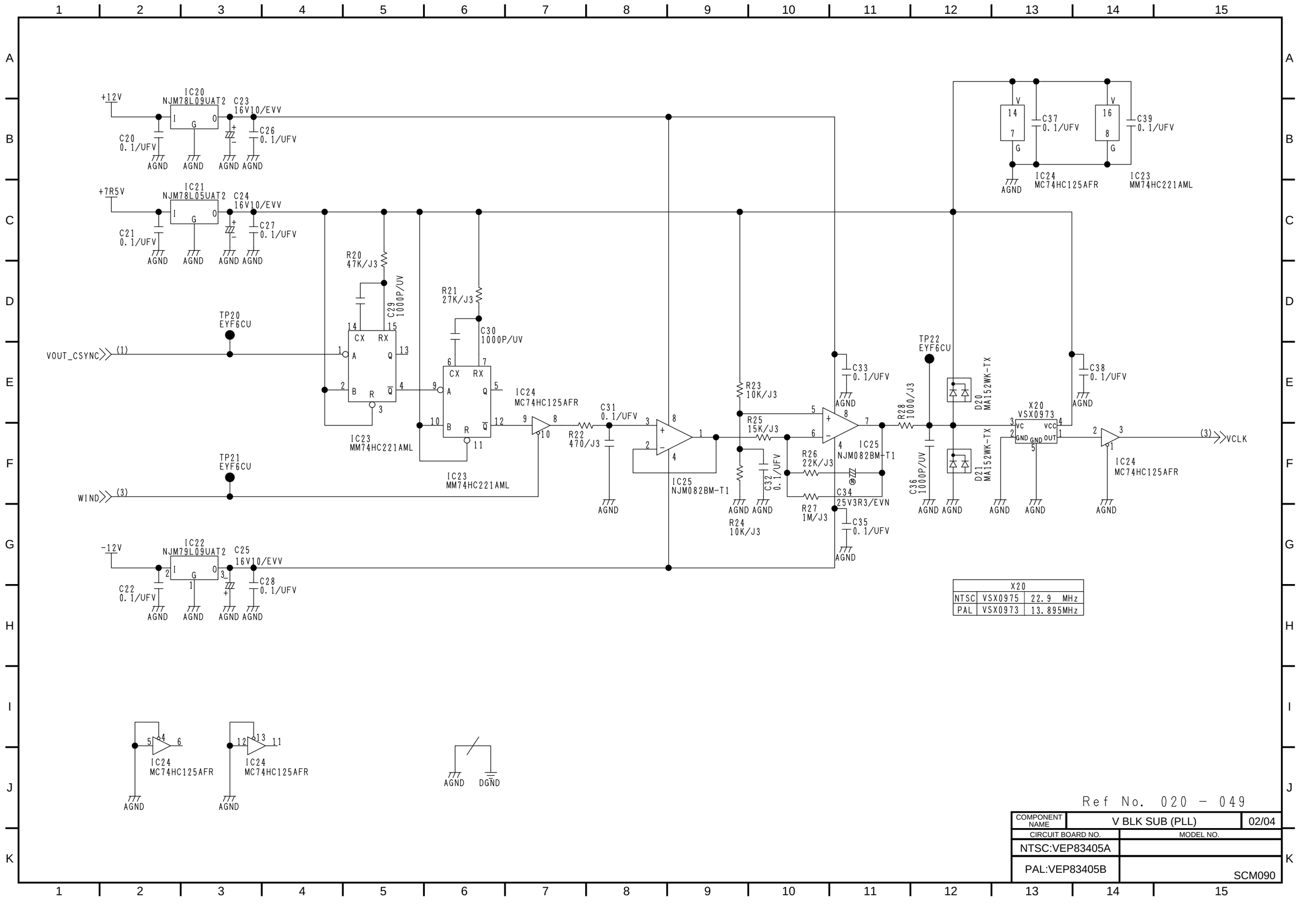

X20		
NTSC	VSX0975	22.9 MHz
PAL	VSX0973	13.895MHz

Ref No. 020 - 049

COMPONENT NAME	V BLK SUB (PLL)	02/04
CIRCUIT BOARD NO.	MODEL NO.	
NTSC:VEP83405A		
PAL:VEP83405B	SCM090	

IC51
T203E3801AF1
VBLK

IC56 T74VHC244FT1
IC50 PAT/T74VHCT244F1
IC52 T74VHC244FT1
IC53 T74VHC244FT1
TP50 EYF6CU
TP51 EYF6CU
CP50
CP51
OPEN

COMPONENT NAME	V BLK SUB (V BLK)	03/04
CIRCUIT BOARD NO.	MODEL NO.	
NTSC:VEP83405A		
PAL:VEP83405B		SCM091

Ref No. 050 - 099, 200 -

IC101
EPF10K20TC-4

VBLK_CNT

Ref No. 100 -

COMPONENT NAME	V BLK SUB (BUS CNV)	04/04
CIRCUIT BOARD NO.	MODEL NO.	
NTSC:VEP83405A		
PAL:VEP83405B		SCM092

MOTHER P.C.BOARD (VEP80A48A)

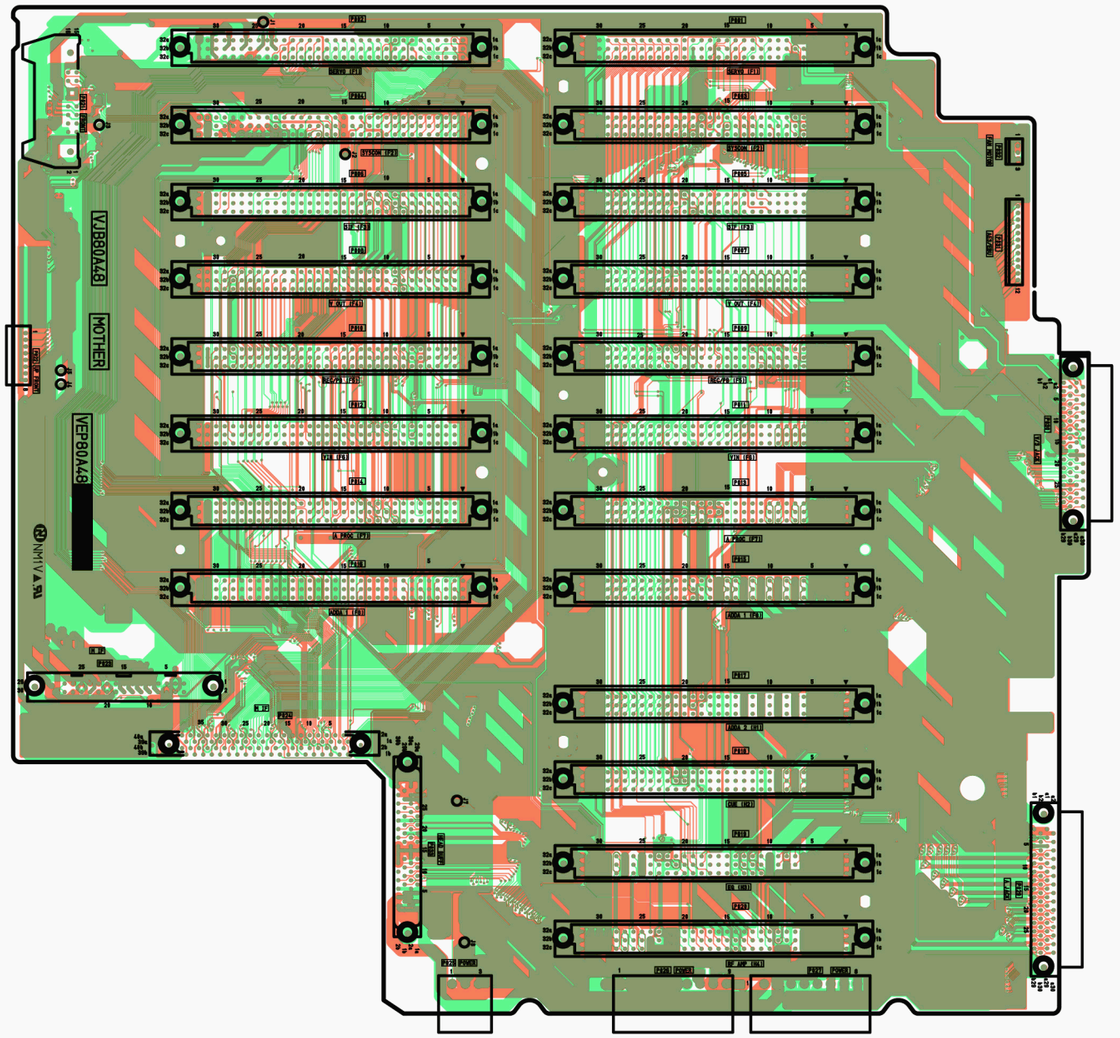

(COMPONENT SIDE)

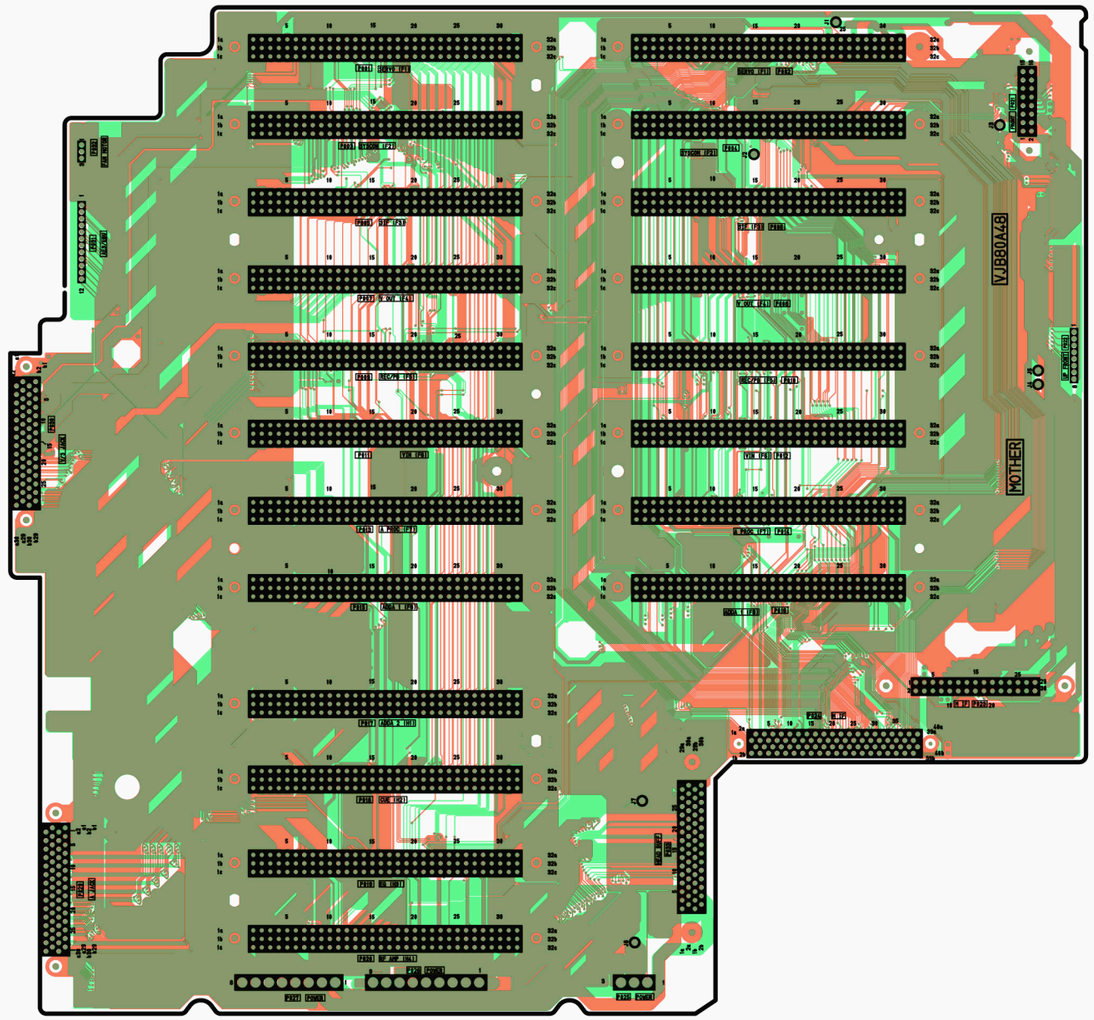

(FOIL SIDE)

FRONSW P.C.BOARD (VEP80A49B)

COMPONENT SIDE

REF	LOC	REF	LOC	REF	LOC
IC1	D2	SW12	E3	SW30	I1
IC11	B2	SW13	F3	SW31	I1
P1	C1	SW14	H3	SW32	H1
P2	C1	SW15	G3	SW33	H2
Q45	J3	SW16	G3	SW34	H2
Q46	I3	SW17	E2	SW35	H2
Q47	I3	SW18	E2	SW36	G2
SW1	J3	SW19	F2	SW37	G2
SW2	J3	SW20	F2	SW38	G2
SW3	I3	SW21	G2	SW39	A1
SW4	J3	SW22	G2	SW40	A1
SW5	J3	SW23	H2	SW41	A2
SW6	I3	SW24	H2	SW42	G3
SW7	K1	SW25	G3	SW43	H3
SW8	I2	SW26	H3		
SW9	J2	SW27	M1		
SW10	J2	SW28	J1		
SW11	F3	SW29	J1		

FOIL SIDE

REF	LOC	REF	LOC	REF	LOC
IC2	D2	QR6	I2	QR24	H3
IC3	D1	QR7	K1	QR25	H3
IC5	J1	QR8	I2	QR26	G3
IC6	I1	QR9	M1	QR27	E2
IC7	J2	QR10	M1	QR28	E2
IC8	E3	QR11	L1	QR29	E2
IC9	F3	QR12	J2	QR30	F2
Q48	D1	QR13	J2	QR31	F2
Q49	D1	QR14	F3	QR32	E3
Q50	D1	QR15	E3	QR33	E3
Q51	D1	QR16	E3	QR34	F2
Q52	D1	QR17	M1	QR35	F2
Q53	D1	QR18	M1	QR36	G2
QR1	J3	QR19	L1	QR37	G2
QR2	J3	QR20	J2	QR38	G2
QR3	I3	QR21	I2	QR39	H2
QR4	J2	QR22	J1	QR40	G3
QR5	J3	QR23	I1		

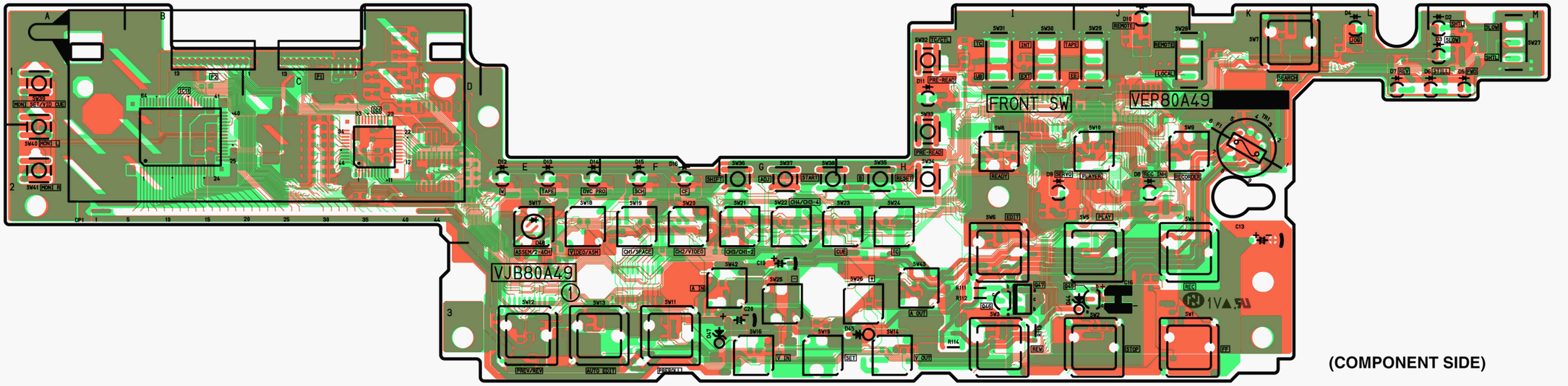

(COMPONENT SIDE)

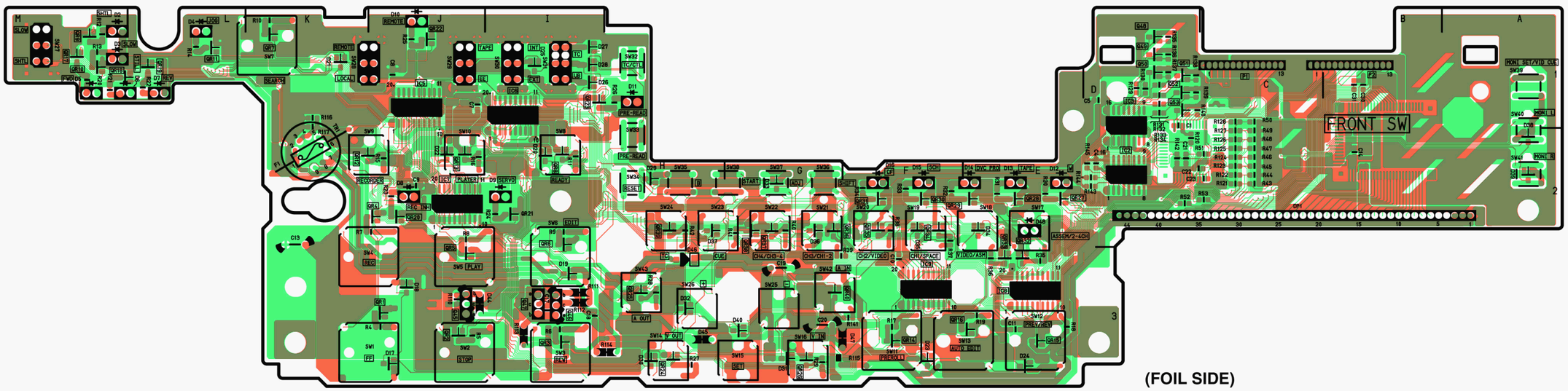

(FOIL SIDE)

CBA-25

CBA-25

UP FRONT 1 P.C.BOARD (VEP80A76A)

COMPONENT SIDE

REF	LOC
P1	A1
P2	E2
SW1	B1
SW2	B1

FOIL SIDE

REF	LOC	REF	LOC
IC1	A1	Q6	D1
IC2	A1	Q7	E1
IC3	B1	Q8	D2
IC4	B1	Q9	E2
Q1	C1	Q10	E2
Q2	D1	Q11	D1
Q3	E1	Q12	E2
Q4	C1	Q13	D2
Q5	D1		

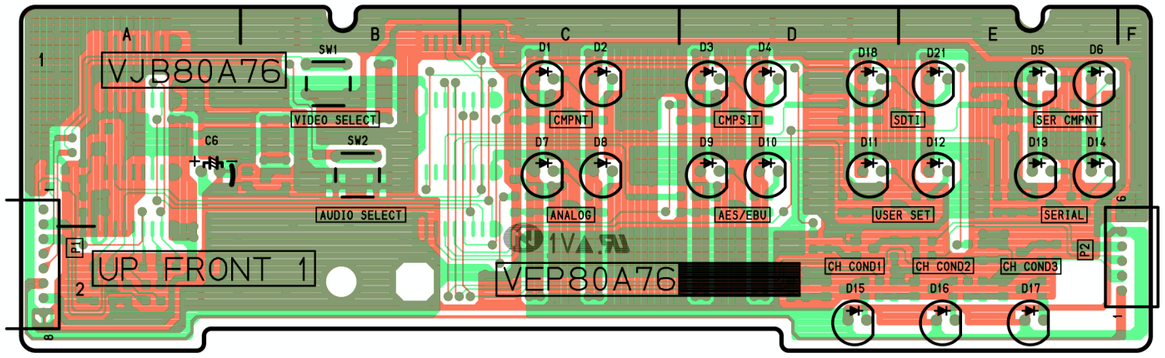

(COMPONENT SIDE)

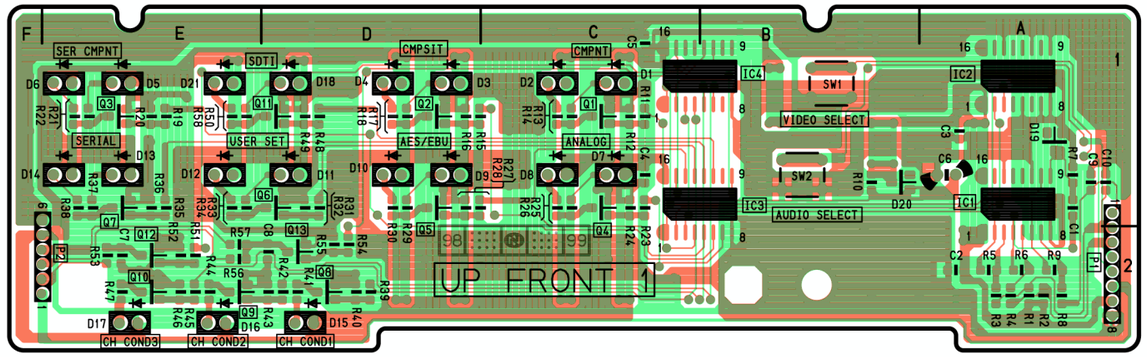

(FOIL SIDE)

FRONT CPU SUB P.C.BOARD (VEP86148A)

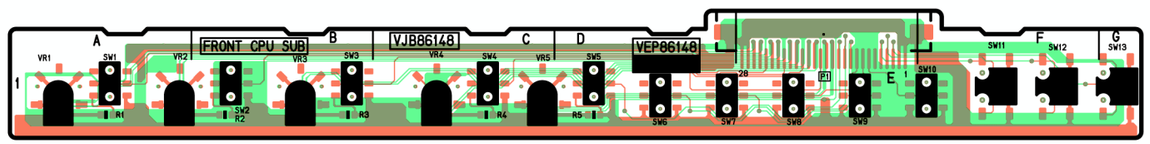

(COMPONENT SIDE)

A JACK P.C.BOARD (VEP84183A,VEP84183B)

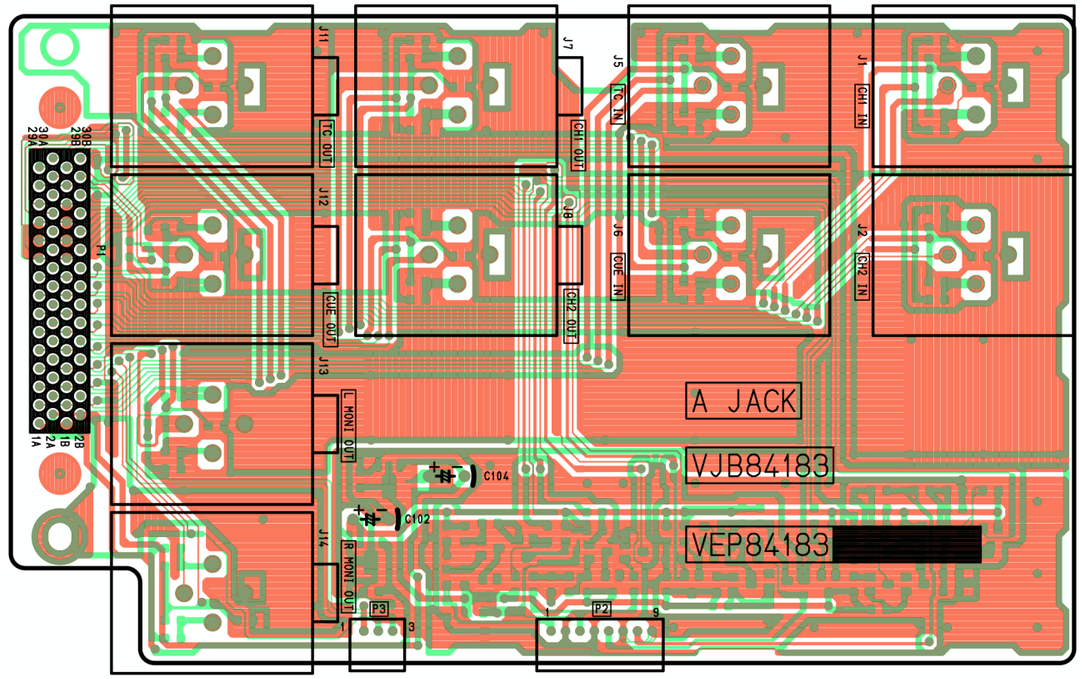

(COMPONENT SIDE)

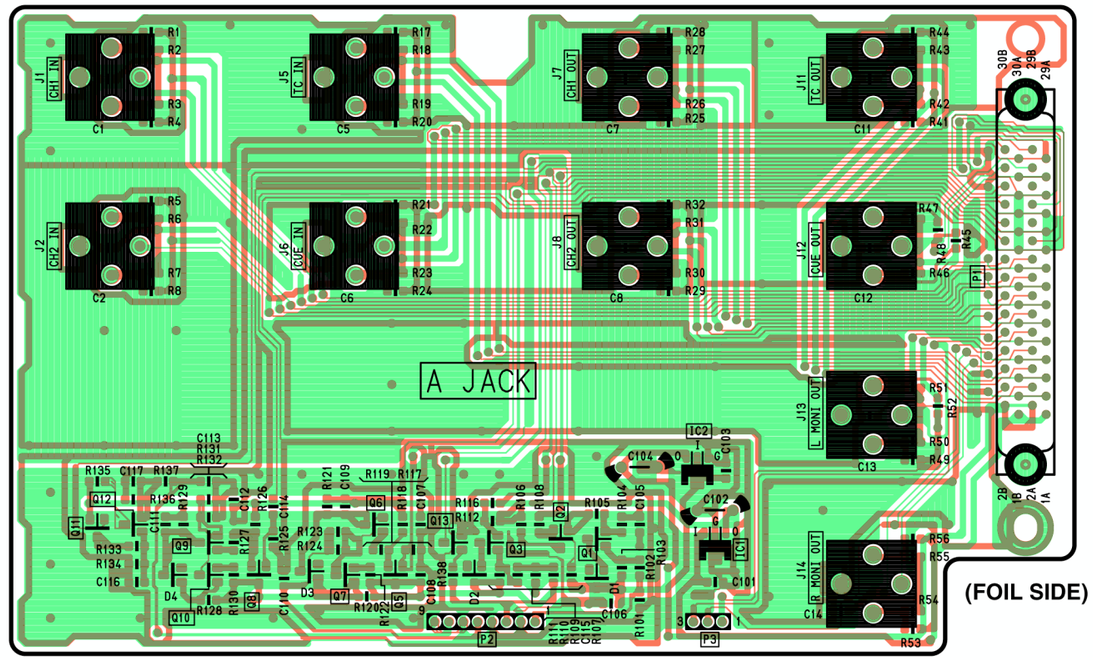

(FOIL SIDE)

FRONT VR1 P.C. BOARD (VEP80963C)

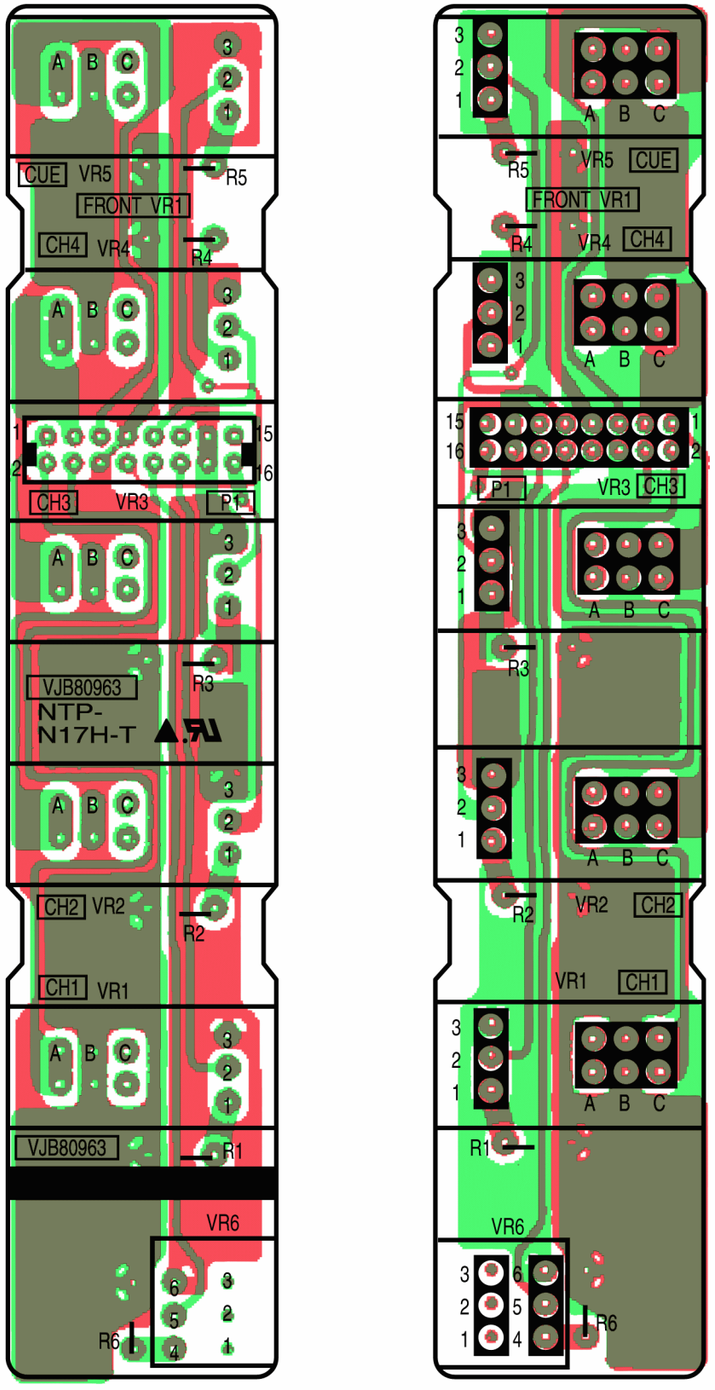

(COMPONENT SIDE)

(FOIL SIDE)

FRONT VR2 P.C. BOARD (VEP80964C)

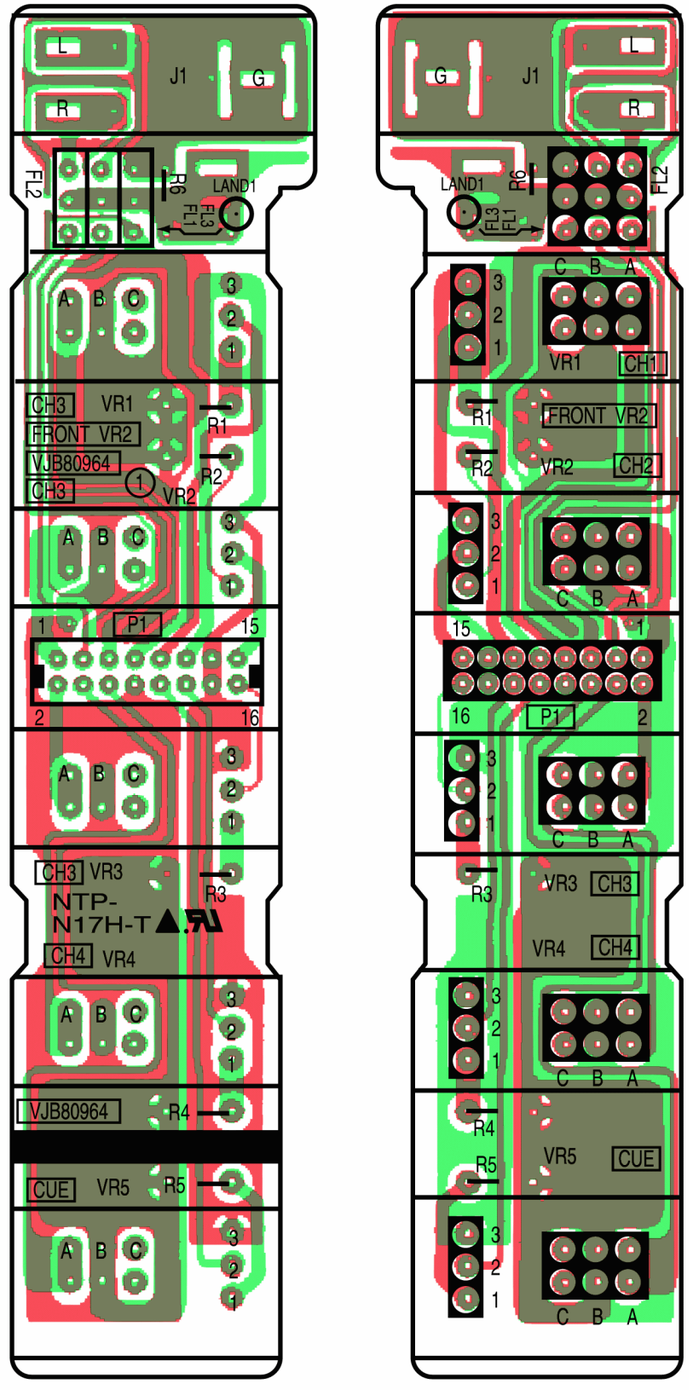

(COMPONENT SIDE)

(FOIL SIDE)

POWER 1 P.C. BOARD (VEP81183A)

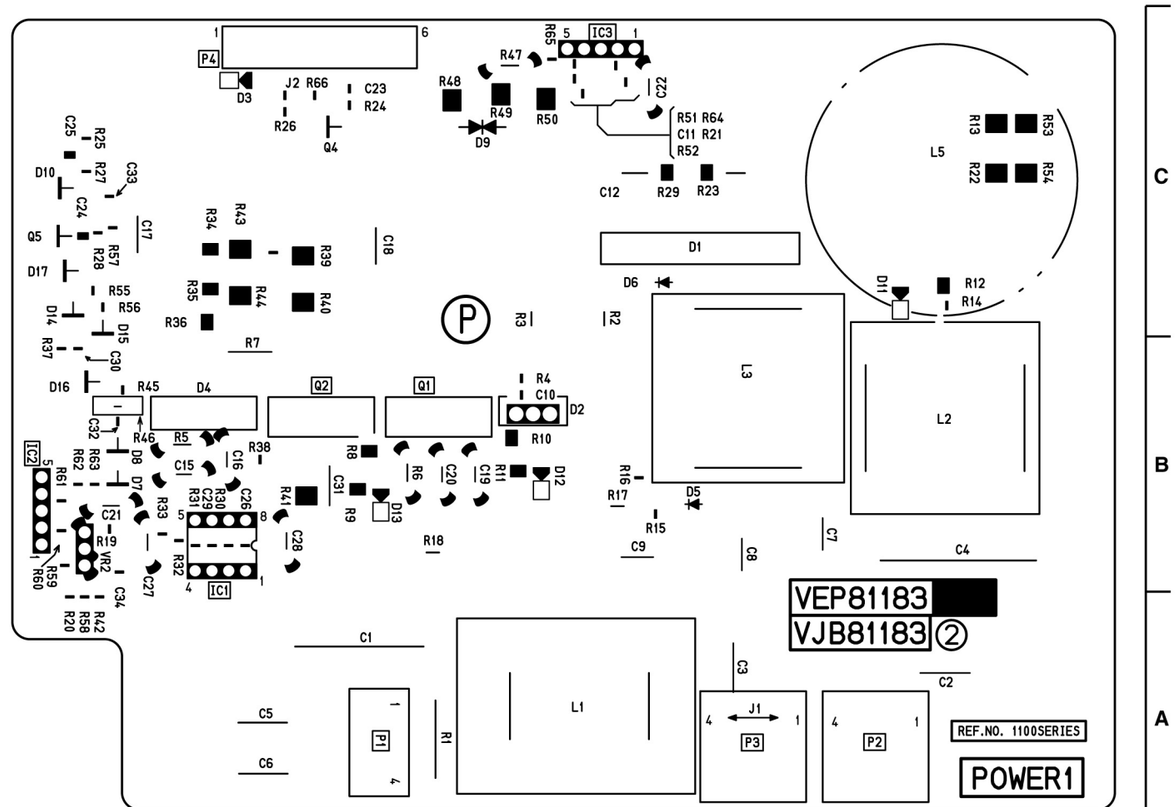

POWER 2 P.C. BOARD (VEP81184B)

内は充電部です。**AC100V**が加わっておりますので点検、修理のときは感電しないよう十分ご注意ください。

CAUTION

THE MARK INDICATES THE PRIMARY CIRCUIT TO DISTINGUISH THE PRIMARY FROM THE SECONDARY CIRCUIT.
PAY ATTENTION NOT TO RECEIVE AN ELECTRIC SHOCK DURING REPAIR AND SERVICE OF THE PRODUCTS.

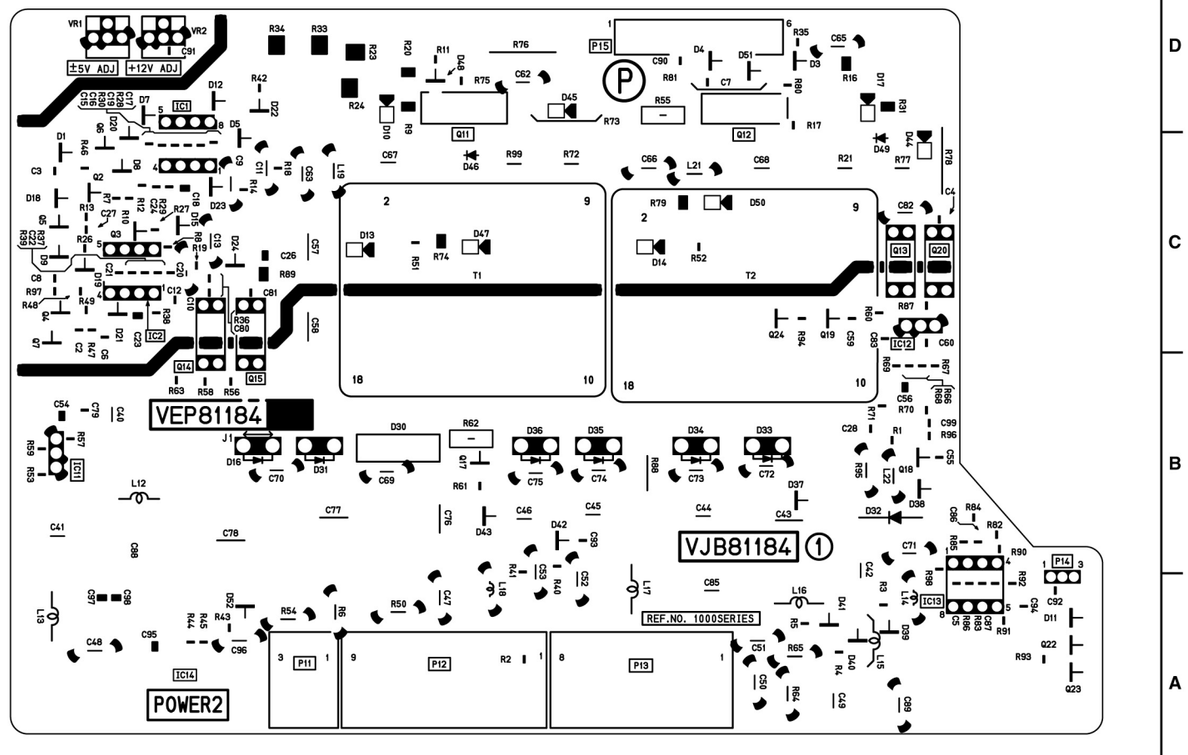

MECHA IF P.C.BOARD (VEP82216A)

COMPONENT SIDE

REF	LOC	REF	LOC
IC1	B2	P33	C2
IC2	B3	P36	B1
IC3	A2	P41	A3
IC4	E2	P48	D1
IC5	E2	Q1	E2
IC6	E1	Q100	D1
IC10	E2	Q101	D2
IC11	D2	QR100	D1
IC100	D2	QR101	D2
P1	D2	SW200	C4
P2	C3	VR1	F4
P11	E1	VR2	F3
P12	C4		
P13	F2		
P14	F2		
P15	F3		
P16	E3		
P17	B4		
P18	A3		
P19	A3		
P20	A2		
P21	A1		
P22	A1		
P24	A2		
P25	C3		
P26	C3		
P30	B2		
P32	F1		

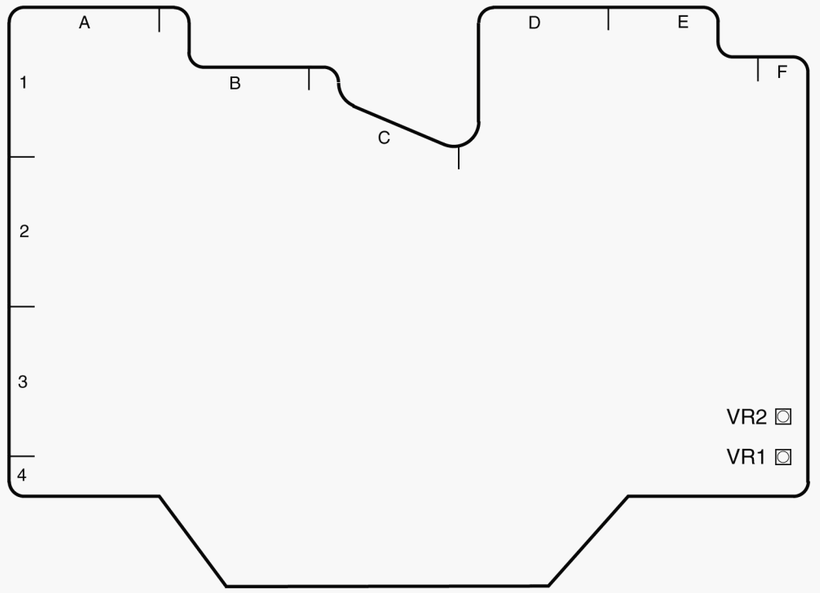

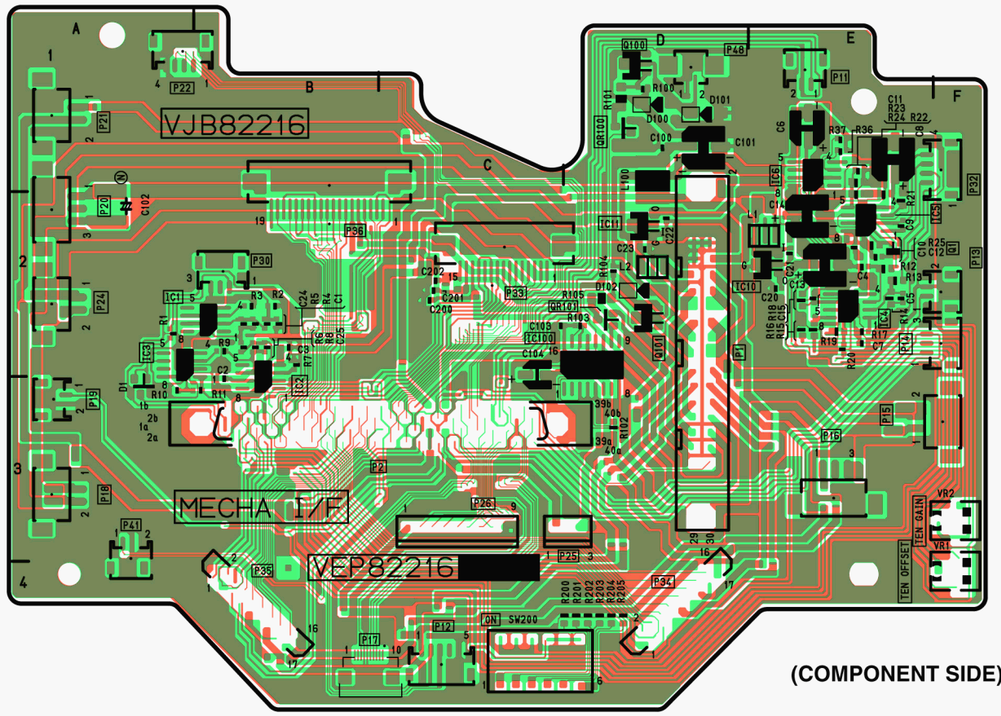

(COMPONENT SIDE)

CBA-24

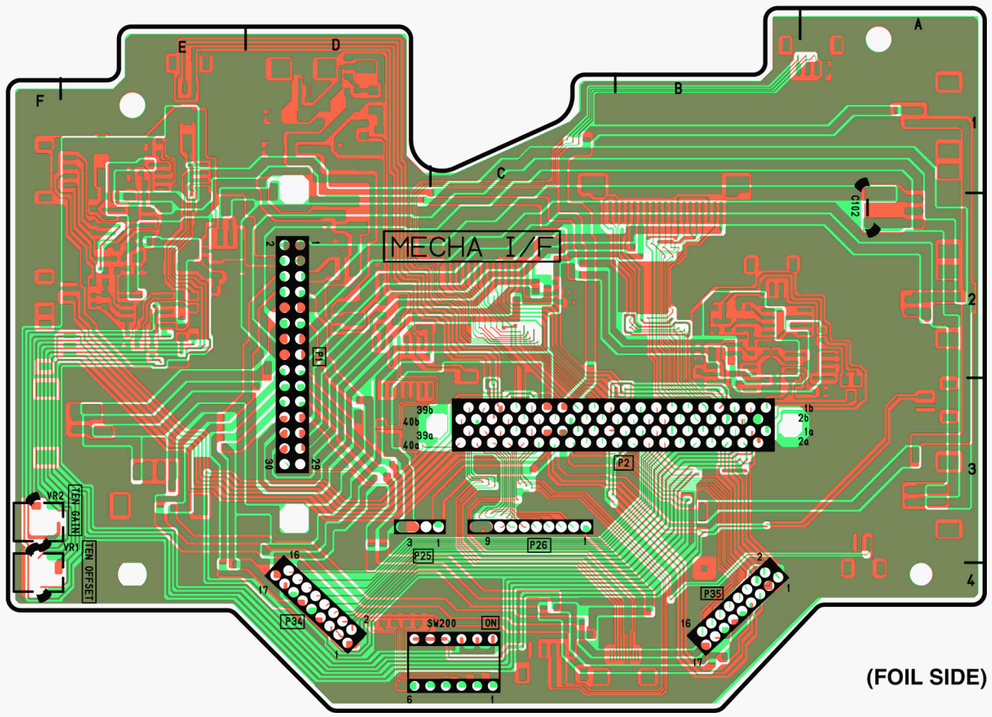

(FOIL SIDE)

CBA-24

SERVO P.C.BOARD (NTSC:VEP82220A,PAL:VEP82220B)

COMPONENT SIDE

REF	LOC	REF	LOC	REF	LOC	REF	LOC
IC1	E4	IC305	G2	Q400	A1	TP121	F2
IC32	E4	IC320	H4	Q401	B1	TP122	C2
IC35	E3	IC322	H3	Q402	B1	TP123	F2
IC63	E2	IC323	H4	Q403	B1	TP160	C2
IC64	E1	IC324	H3	Q510	C4	TP161	D2
IC65	E1	IC400	A5	Q511	C4	TP162	C2
IC66	E2	IC401	B5	QR3	E4	TP163	E2
IC68	D1	IC450	B4	QR4	E4	TP200	G4
IC72	D2	IC451	A4	QR30	E3	TP201	G4
IC73	D1	IC600	C2	QR340	A2	TP202	G4
IC201	G4	IC717	H2	QR341	A2	TP230	H2
IC203	F4	P1	G5	TG510	F1	TP231	D1
IC204	G3	P2	D5	TG511	F4	TP232	D1
IC230	I2	P500	F2	TP1	E4	TP233	E1
IC231	I3	P701	I1	TP2	D4	TP234	E1
IC235	H1	P702	H1	TP30	E4	TP280	F1
IC238	H2	P703	H1	TP31	E2	TP300	F1
IC240	H2	Q1	E4	TP32	E3	TP301	F1
IC260	I3	Q2	E4	TP33	E3	TP302	H3
IC261	I3	Q3	E4	TP34	F4	TP320	G3
IC262	I4	Q4	E4	TP35	F3	TP321	F1
IC265	G3	Q5	E4	TP60	D2	TP400	A4
IC267	G3	Q6	E4	TP80	D2	TP401	B4
IC280	F1	Q340	C1	TP81	E2	TP450	B3
IC281	F1	Q341	C1	TP82	D2	TP451	A3
IC282	G1	Q380	B1	TP83	E2	TP500	B4
IC300	H2	Q381	C1	TP120	C2		

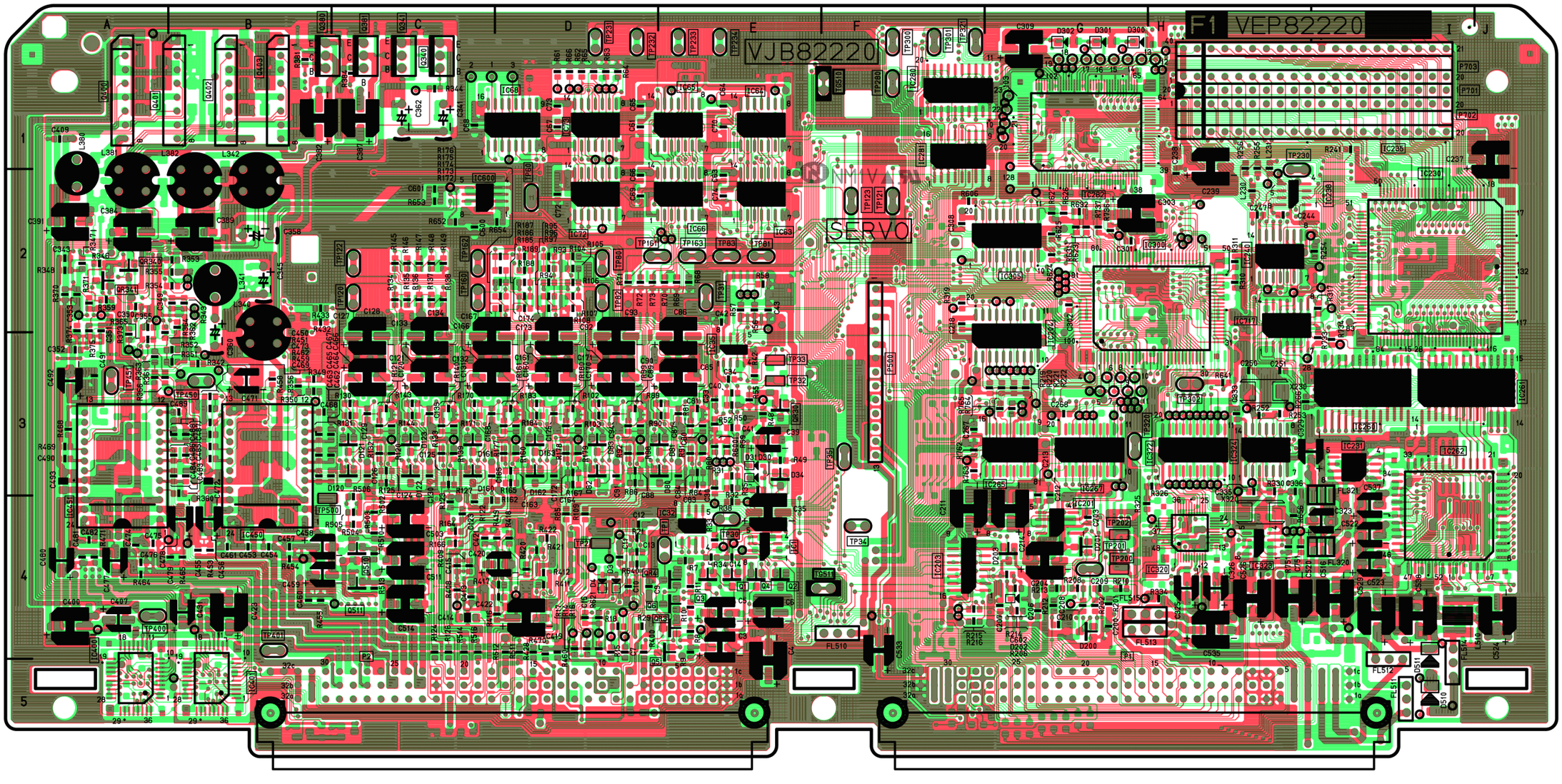

(COMPONENT SIDE)

CBA-2

CBA-2

SERVO P.C.BOARD(NTSC:VEP82220A,PAL:VEP82220B)

FOIL SIDE

REF	LOC	REF	LOC	REF	LOC	REF	LOC
IC2	D4	IC237	H2	IC515	I4	QR401	B3
IC3	D4	IC241	G3	IC516	I4	QR600	B5
IC30	E3	IC263	I3	IC517	I4	QR601	C5
IC31	E3	IC264	I4	Q500	C4		
IC33	E3	IC266	G3	Q501	C4		
IC34	E2	IC268	G3	QR1	E4		
IC60	E2	IC269	F3	QR2	E4		
IC61	D1	IC301	G3	QR5	D4		
IC67	D1	IC302	G2	QR6	D4		
IC69	D2	IC303	H3	QR7	D4		
IC70	E1	IC304	G2	QR8	D4		
IC71	E1	IC321	H4	QR81	E3		
IC74	E2	IC325	H3	QR82	D3		
IC80	E3	IC326	H3	QR83	D3		
IC81	D3	IC340	A2	QR84	D3		
IC82	D2	IC341	A2	QR85	E3		
IC83	D2	IC342	A2	QR120	C3		
IC120	C3	IC402	C4	QR121	C3		
IC121	C3	IC403	D4	QR122	C3		
IC160	C2	IC404	D4	QR123	C3		
IC161	C3	IC452	B3	QR124	C3		
IC162	D3	IC500	C4	QR160	C3		
IC200	G4	IC510	I4	QR161	D3		
IC202	G4	IC511	I4	QR162	D3		
IC205	G4	IC512	I4	QR163	D3		
IC207	G4	IC513	I4	QR164	D3		
IC236	H3	IC514	I4	QR400	B3		

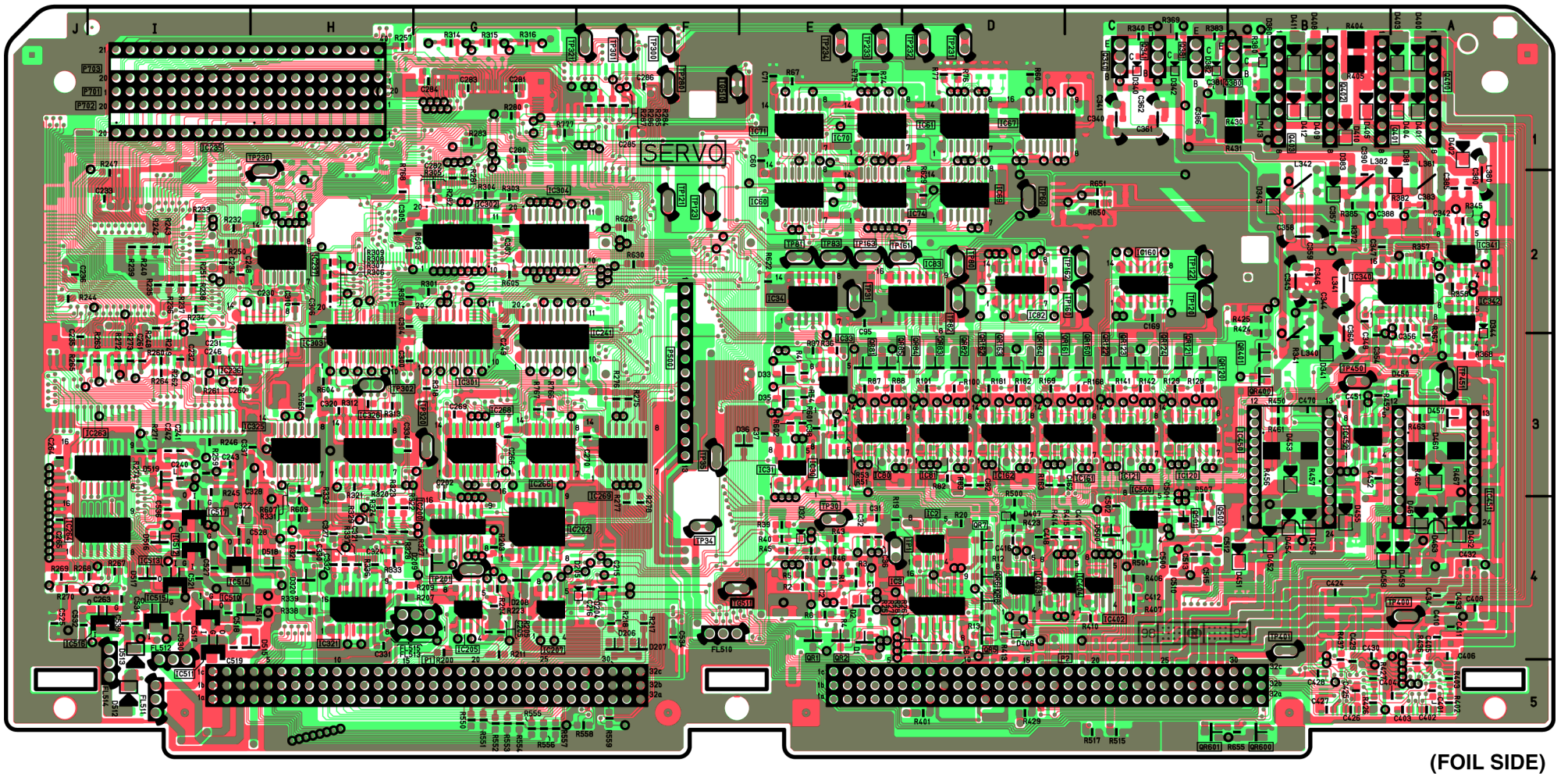

(FOIL SIDE)

CBA-3

CBA-3

REC PB P.C.BOARD (NTSC:VEP83394A,PAL:83394B)

COMPONENT SIDE

REF	LOC	REF	LOC	REF	LOC
IC75	F1	IC511	A1	TG2	G1
IC105	G4	IC512	B2	TG3	D1
IC108	G3	IC640	B5	TG171	F3
IC109	G3	IC641	B3	TG462	A1
IC110	H4	IC642	B4	TG910	I1
IC111	G4	IC645	B3	TP130	E1
IC131	F2	IC671	B2	TP131	E1
IC172	F1	IC780	H3	TP170	F4
IC177	E3	IC805	I3	TP300	E3
IC181	F3	IC840	C3	TP301	E3
IC182	F2	IC870	I2	TP303	E1
IC188	F2	IC910	I1	TP304	A1
IC300	C4	IC980	H4	TP400	J3
IC302	C4	IC981	H4	TP421	I5
IC303	D4	IC982	H4	TP440	G1
IC330	D4	IC984	H4	TP441	G1
IC331	C4	IC985	H4	TP460	D1
IC334	D3	IC1023	I3	TP510	B1
IC335	E2	IC1111	I3	TP870	J2
IC380	H2	P1	G5	TP871	I1
IC382	H1	P2	D5	TP911	I1
IC400	H3	P60	F1	TP912	I1
IC420	I4	P1050	C1	VC170	F3
IC441	G2	P1060	A3	VR460	E1
IC443	G1	P1110	I4	VR461	E1
IC461	C2	SW100	H1	VR462	E1
IC462	D2	SW330	G1		
IC463	D1	SW331	H1		
IC466	D2	SW1110	H1		
IC510	B2	TG1	I5		

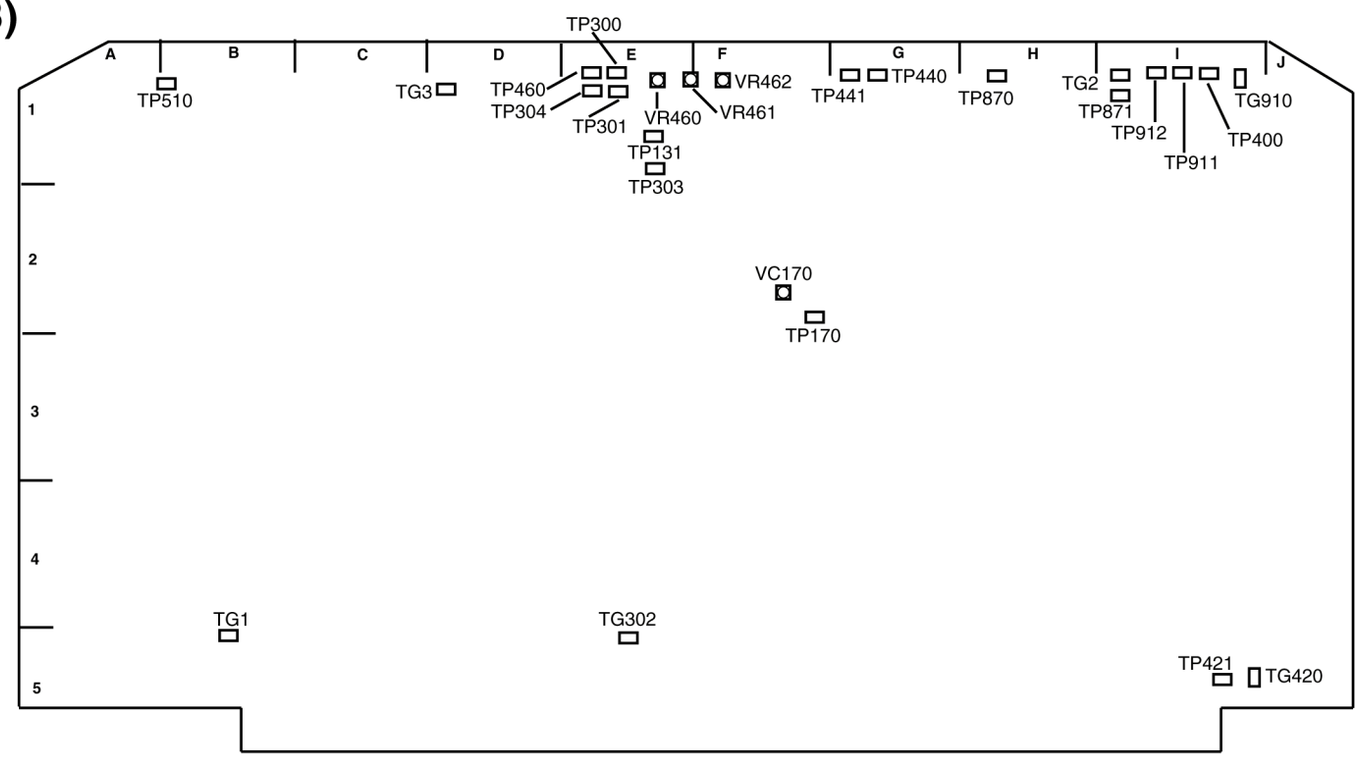

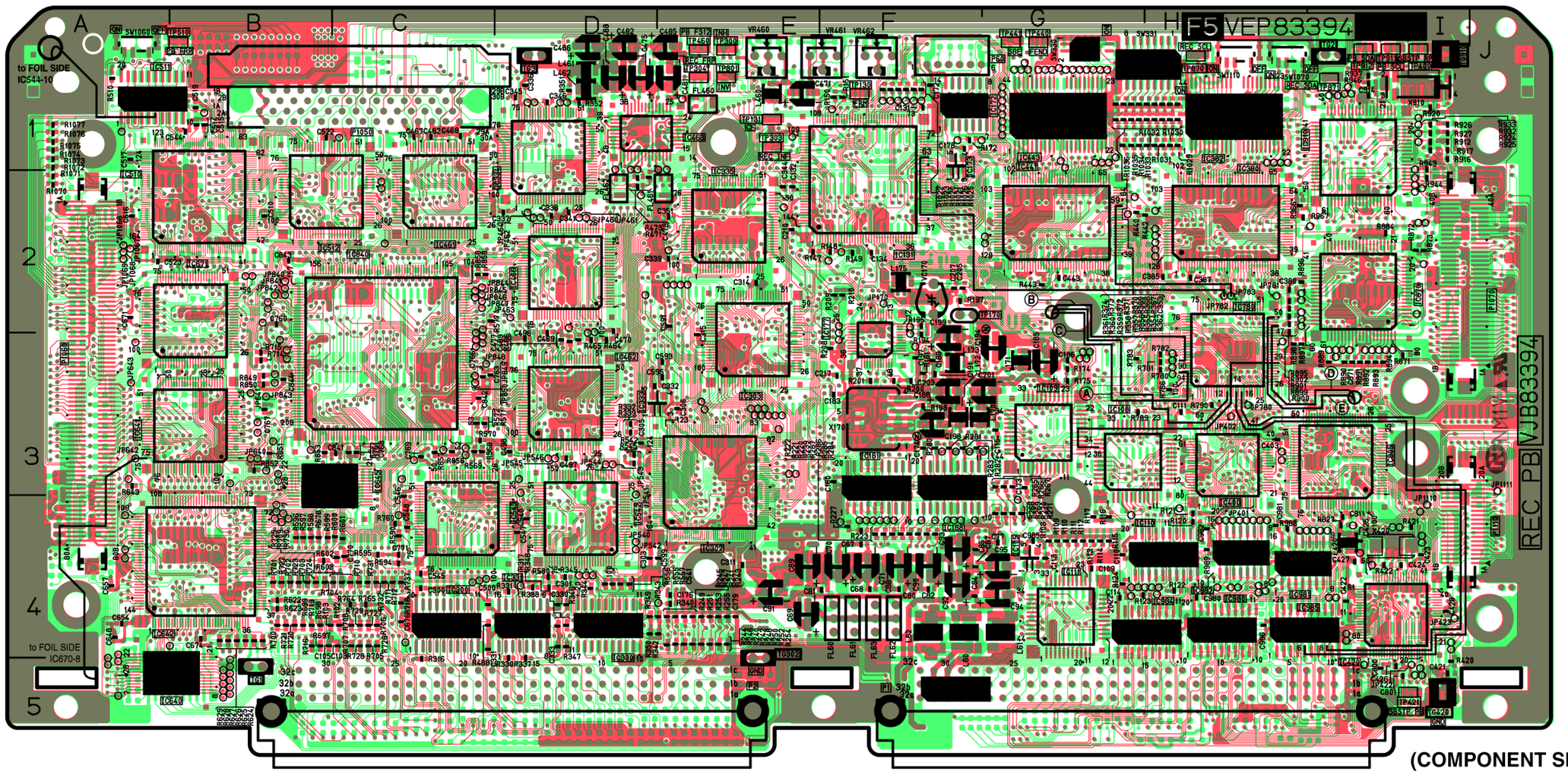

(COMPONENT SIDE)

CBA-8

REC P.C.BOARD (NTSC:83394A,PAL:83394B)

FOIL SIDE

REF	LOC	REF	LOC	REF	LOC	REF	LOC
IC61	E4	IC175	F3	IC643	B4	IC1051	C1
IC62	F4	IC176	F3	IC644	B4	IC1052	C1
IC63	F4	IC178	E2	IC670	B5	IC1053	B1
IC65	F4	IC183	F2	IC760	B2	IC1054	A1
IC66	E4	IC184	E2	IC761	C2	IC1110	J3
IC67	F4	IC185	D4	IC762	B3	Q170	E3
IC68	E4	IC186	F2	IC763	C3		
IC69	F4	IC187	F3	IC764	B4		
IC70	F4	IC189	E3	IC765	C4		
IC71	G4	IC190	E2	IC766	B4		
IC72	G4	IC301	C4	IC767	C4		
IC73	E4	IC304	D1	IC781	G3		
IC74	G4	IC332	D4	IC782	G3		
IC101	H4	IC336	H1	IC783	I3		
IC102	G4	IC337	G1	IC784	H3		
IC103	H3	IC338	H1	IC800	I4		
IC104	H4	IC339	G1	IC801	I5		
IC106	G4	IC381	I2	IC802	I4		
IC107	G3	IC401	H4	IC803	I4		
IC112	G3	IC402	J4	IC804	H3		
IC114	F2	IC403	J4	IC871	I1		
IC115	F2	IC440	H3	IC911	I1		
IC116	G2	IC442	F2	IC912	I1		
IC130	E1	IC464	D1	IC913	I1		
IC132	F1	IC465	C4	IC983	I4		
IC133	F1	IC540	A2	IC986	H4		
IC170	G3	IC541	B2	IC1020	H2		
IC171	G3	IC544	A1	IC1021	G2		
IC173	F3	IC545	A2	IC1022	I2		
IC174	F3	IC546	A2	IC1050	C1		

JUMPER WIRE INFORMATION

Ⓐ IC782 - 17pin (FOIL SIDE) ⟷ IC780 - 94pin (COMPONENT SIDE)
Ⓑ IC986 - 11pin (FOIL SIDE) ⟷ IC780 - 90pin (COMPONENT SIDE)
Ⓒ IC986 - 10pin (FOIL SIDE) ⟷ IC780 - 12pin (COMPONENT SIDE)
Ⓓ IC440 - 08pin (FOIL SIDE) ⟷ IC780 - 47pin (COMPONENT SIDE)
Ⓔ IC440 - 11pin (FOIL SIDE) ⟷ IC780 - 50pin (COMPONENT SIDE)

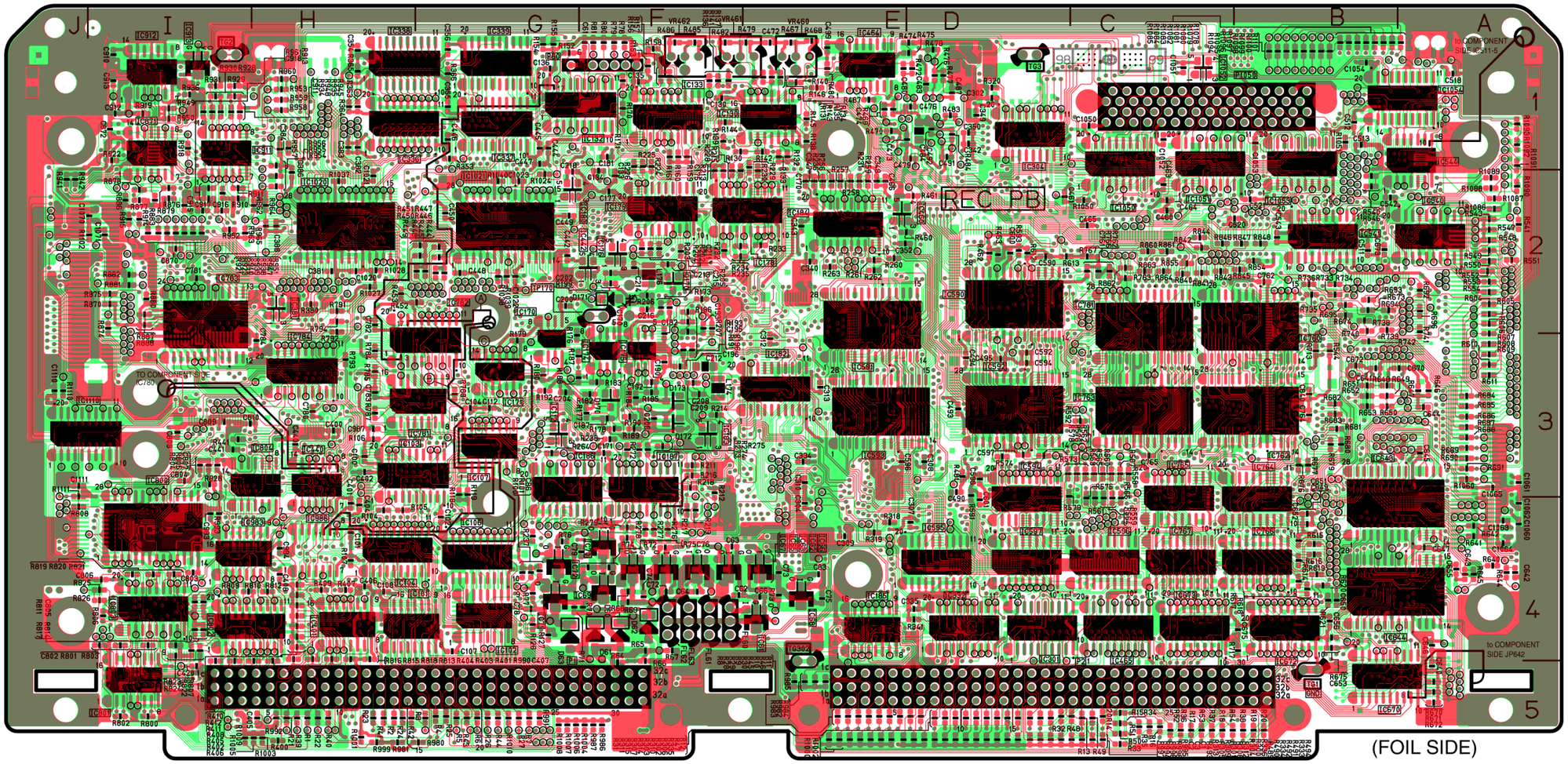

(FOIL SIDE)

CBA-9

CBA-9

VBLK SUB P.C.BOARD (NTSC:VEP83405A,PAL:VEP83405B)

COMPONENT SIDE

REF	LOC
IC20	D3
IC21	D3
IC22	D3
IC23	B3
IC24	C3
IC25	B3
IC50	C1
IC51	C2
IC52	D1
IC53	D1
IC54	D1
IC55	D1
IC56	D2
IC101	B2
IC102	A2
IC103	B1
IC104	B1
IC105	A3
P1	E2

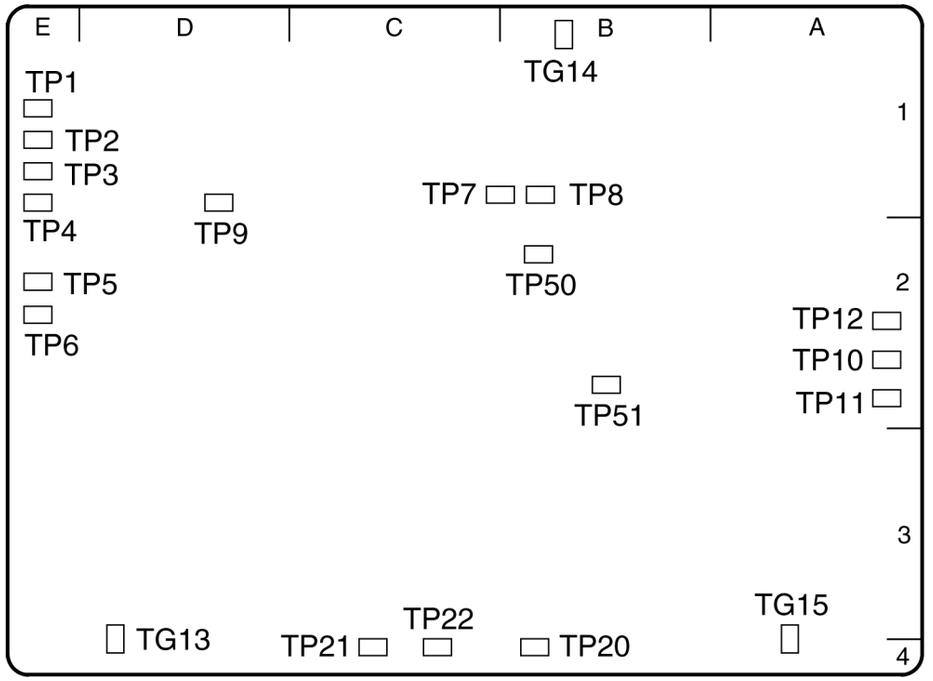

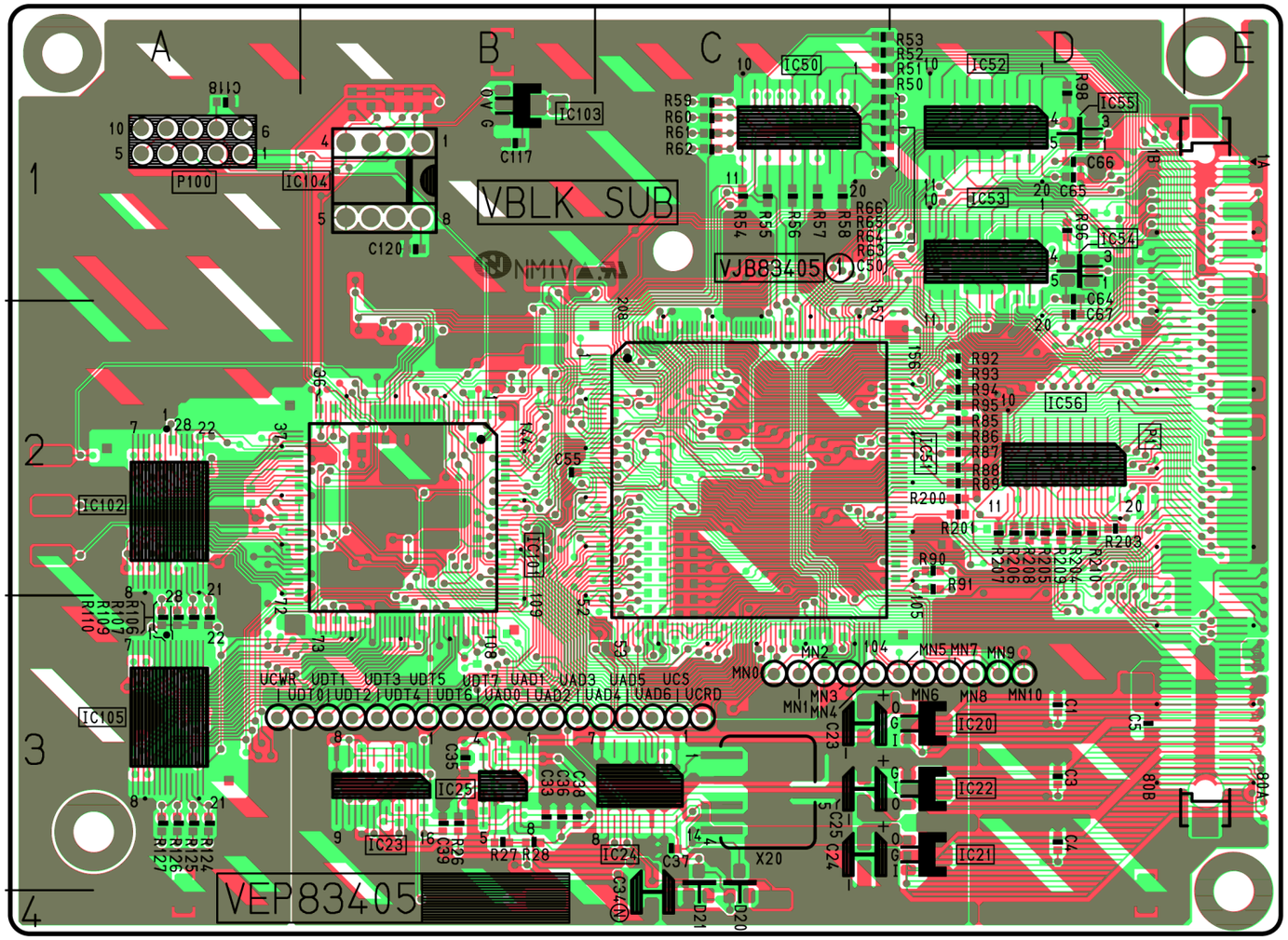

(COMPONENT SIDE)

CBA-10

VBLK SUB P.C.BOARD (NTSC:VEP83405A,PAL:VEP83405B)

FOIL SIDE

REF	LOC
P100	B1
TG13	E4
TG14	C1
TG15	B4
TP1	E1
TP2	E1
TP3	E1
TP4	E1
TP5	E2
TP6	E2
TP7	C1
TP8	C1
TP9	D1
TP10	A2
TP11	A2
TP12	A2
TP20	C4
TP21	D4
TP22	C4
TP50	C2
TP51	C2

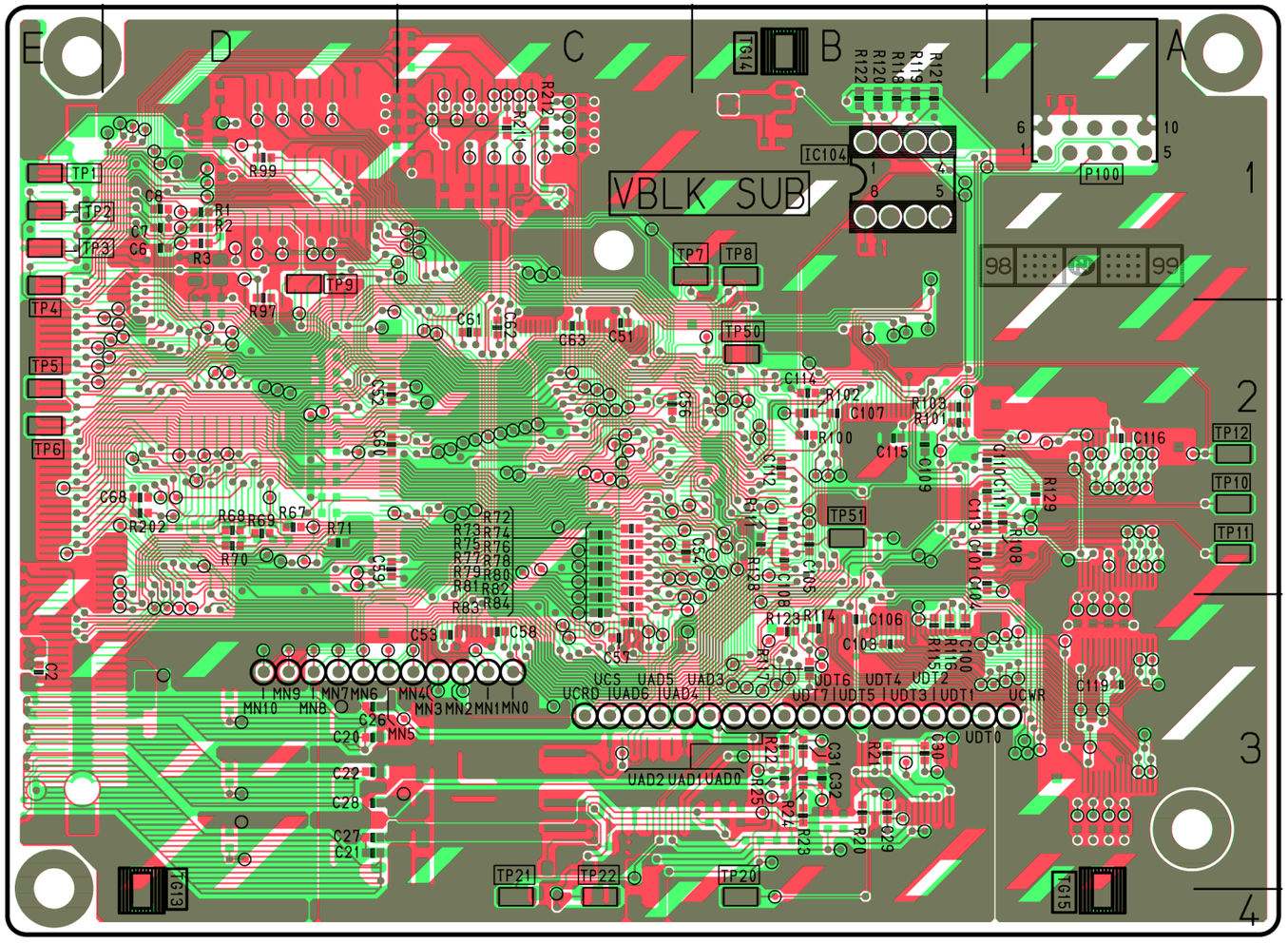

(FOIL SIDE)

CBA-11

V IN -NTSC P.C.BOARD (NTSC:VEP83409A,NTSC:VEP83409B)

COMPONENT SIDE

REF	LOC	REF	LOC	REF	LOC	REF	LOC	REF	LOC	REF	LOC
IC101	I4	IC461	I1	IC756	C2	Q501	H1	TP502	G2	VR551	G1
IC102	I4	IC462	I1	IC757	C2	Q509	G1	TP503	H2	VR601	D1
IC103	I5	IC463	H2	IC758	D2	Q512	F1	TP504	G3	VR602	D1
IC104	I4	IC502	H4	IC759	A2	Q514	E1	TP601	E2	VR701	A3
IC201	F4	IC503	G3	IC802	A1	Q515	F1	TP602	F3	VR702	C1
IC207	E4	IC505	H1	IC805	A2	Q652	D2	TP603	E1	VR703	C3
IC208	D4	IC507	G2	IC805	C1	Q654	D1	TP701	A3	VR704	C3
IC209	F4	IC508	H2	IC807	C1	Q655	D1	TP751	A2	VR752	C1
IC210	G4	IC509	F2	IC808	D1	Q657	D1	TP801	A1	VR753	A2
IC251	D4	IC510	G2	IC809	A1	Q658	D2	TP951	F3	VR754	C2
IC252	D4	IC513	H3	IC851	B4	Q703	C3	TP952	E3	VR801	B1
IC253	C3	IC515	E1	IC901	C4	Q704	C3	VR301	J4	VR802	B1
IC254	C4	IC516	F2	IC902	C4	Q753	C2	VR351	I3	VR803	A1
IC259	C4	IC551	F3	IC903	B4	Q754	C2	VR451	I2	VR804	B1
IC309	I4	IC552	F4	IC904	A3	Q755	C2	VR452	H2	VR951	E3
IC351	I3	IC553	F3	IC905	B4	Q756	A2	VR453	I1	VR952	E2
IC352	I3	IC554	G3	IC911	E3	Q803	C1	VR454	I1		
IC353	J3	IC555	G3	IC912	F3	Q804	C1	VR455	H1		
IC354	I3	IC601	E1	IC913	E3	Q805	C1	VR501	H1		
IC355	H3	IC602	E2	IC952	E4	Q902	B3	VR502	H1		
IC356	H2	IC603	E1	IC953	E3	Q955	E4	VR503	G2		
IC401	G4	IC604	E2	IC954	D4	P2	E5	VR504	H1		
IC402	G3	IC605	E2	IC955	D3	TG1	H3	VR505	F1		
IC403	H4	IC606	E2	IC956	D3	TG2	F3	VR507	G1		
IC404	H4	IC607	E3	IC957	D2	TG3	D3	VR510	F1		
IC450	H2	IC608	E1	IC981	A4	TG4	E2	VR512	G2		
IC451	I2	IC702	B3	IC984	A3	TG5	B1	VR513	F1		
IC457	H2	IC705	A3	IC985	B5	TG6	E4	VR514	E1		
IC458	H2	IC752	B2	IC986	A5	TP351	I3	VR515	F1		
IC459	I1	IC755	A2	Q452	H2	TP501	G2	VR516	F1		

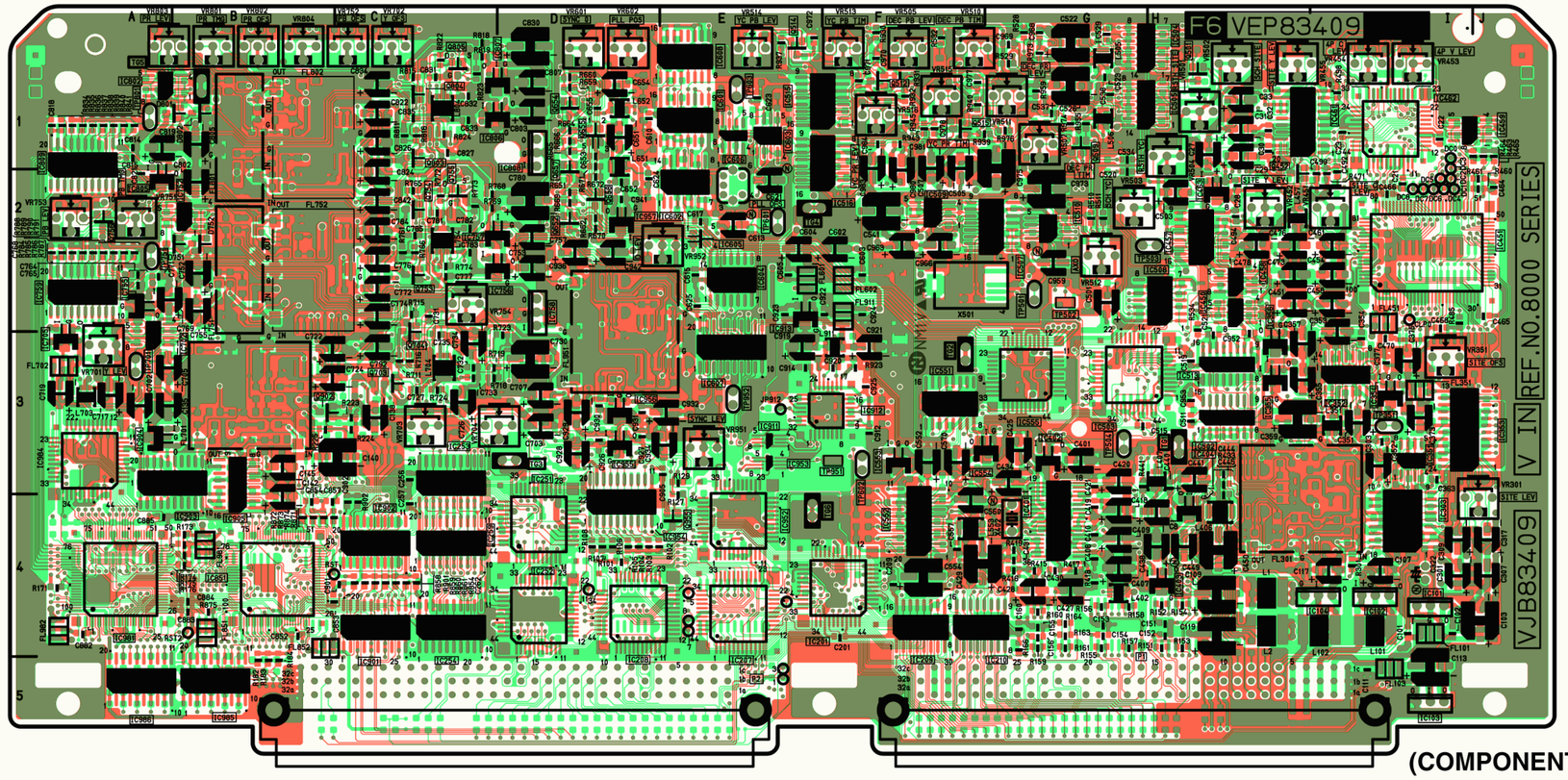

(COMPONENT SIDE)

CBA-12

CBA-12

V IN-NTSC P.C.BOARD (NTSC:VEP83409JAPAN,NTSC:VEP83409OVER SEAS)

FOIL SIDE

REF	LOC	REF	LOC	REF	LOC	REF	LOC	REF	LOC	REF	LOC
IC101	I4	IC706	D3	Q502	G1	Q951	D3	VR301	J4	VR801	B1
IC102	I4	IC707	D3	Q503	G1	Q952	D3	VR351	I3	VR802	B1
IC103	I5	IC710	B3	Q504	F1	Q953	D3	VR451	I2	VR803	A1
IC104	H4	IC751	C1	Q505	F1	Q954	D2	VR452	H2	VR804	B1
IC151	H4	IC753	C2	Q507	F2	Q956	E3	VR453	I1	VR951	E3
IC152	G4	IC754	A2	Q508	G1	Q957	D3	VR454	I1	VR952	D2
IC153	G4	IC758	D2	Q510	G1	QR201	E4	VR455	H1		
IC154	D4	IC801	C1	Q511	F1	QR551	G2	VR501	H1		
IC156	F4	IC803	C1	Q513	E1	QR701	C3	VR502	H1		
IC204	E4	IC804	A1	Q516	F1	QR702	D3	VR503	G2		
IC255	C4	IC808	D1	Q517	F1	QR751	D2	VR504	H1		
IC301	I3	IC852	C3	Q518	F1	QR801	B1	VR505	F1		
IC302	I3	IC853	C4	Q601	D1	P2	C5	VR507	G1		
IC405	H3	IC951	D4	Q602	D1	TG1	H3	VR510	F1		
IC406	H4	IC958	D2	Q603	D1	TG2	F3	VR511	G1		
IC407	G3	IC959	D3	Q604	D1	TG3	D3	VR512	G2		
IC452	I2	IC982	A4	Q651	D2	TG4	E2	VR513	F1		
IC453	I2	IC983	B4	Q653	D1	TG5	B1	VR514	E1		
IC454	H2	Q301	I4	Q656	D1	TG6	E4	VR515	F1		
IC455	H2	Q302	H4	Q701	B3	TP351	I3	VR516	F1		
IC456	H1	Q303	I4	Q702	B3	TP501	G2	VR601	D1		
IC460	I1	Q351	I3	Q705	C3	TP503	H2	VR602	D1		
IC501	H3	Q352	I3	Q706	B3	TP504	G3	VR701	A3		
IC511	F2	Q353	I3	Q707	B2	TP601	E2	VR702	C1		
IC512	F2	Q401	F4	Q751	B2	TP602	F3	VR703	C3		
IC514	G3	Q404	G3	Q752	B2	TP603	E1	VR704	D3		
IC517	F1	Q405	G3	Q801	B1	TP701	A3	VR751	A2		
IC518	F1	Q406	G3	Q802	B1	TP751	A2	VR752	C1		
IC703	C3	Q454	H1	Q806	B1	TP801	A1	VR753	A2		
IC704	A3	Q455	H1	Q901	C3	TP952	E3	VR754	C2		

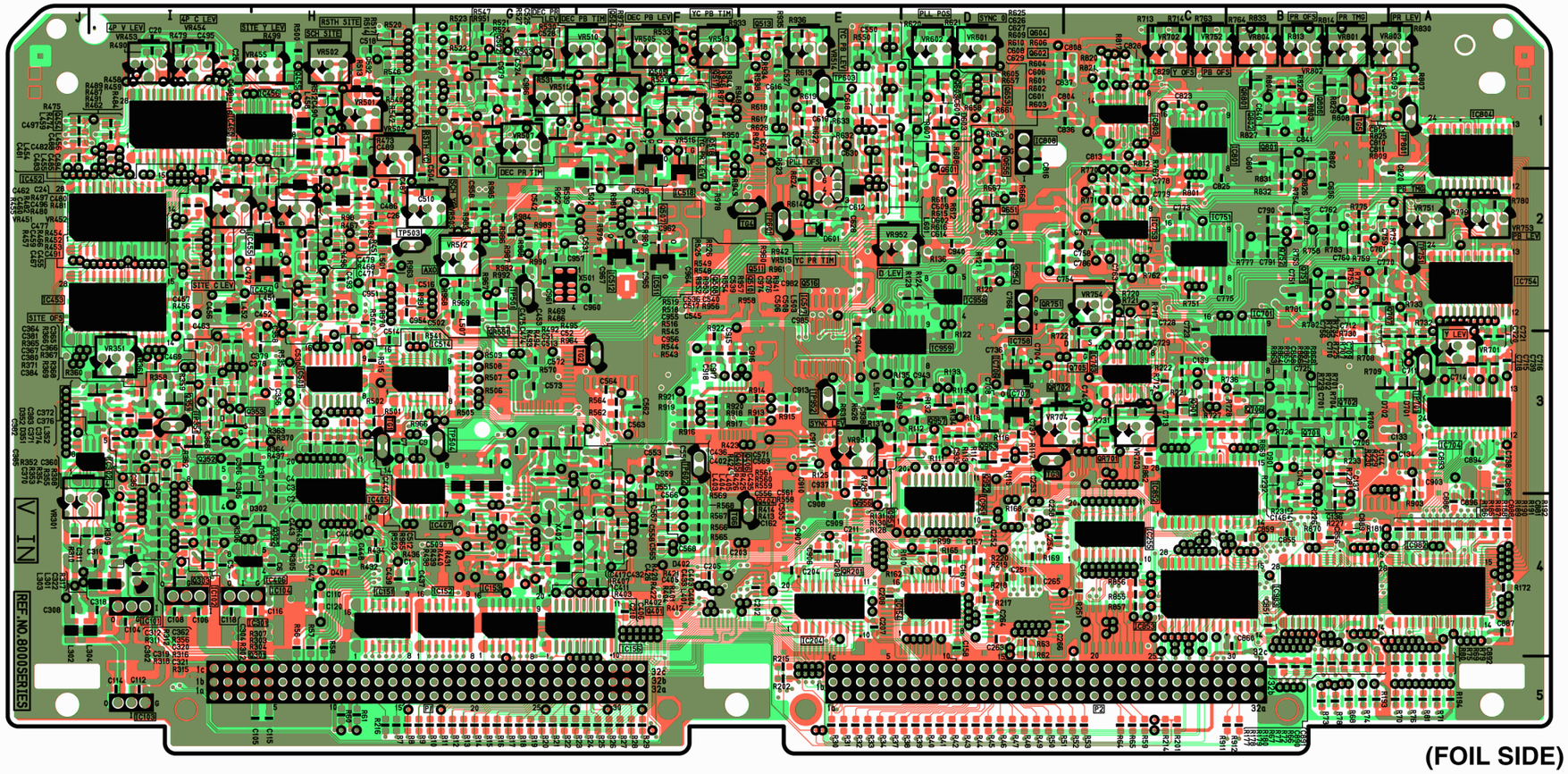

(FOIL SIDE)

CBA-13

CBA-13

V OUT P.C.BOARD (NTSC:VEP83410A,NTSC:83410C,PAL:83410B)

COMPONENT SIDE

REF	LOC	REF	LOC	REF	LOC	REF	LOC	REF	LOC
IC3050	D2	IC3585	G3	Q3901	G1	TP3106	E1	VR3703	H3
IC3051	E4	IC3586	G3	Q3903	H1	TP3200	B3	VR3704	H2
IC3070	D1	IC3587	A4	Q3904	H2	TP3340	B4	VR3705	J2
IC3072	E1	IC3588	F3	Q3905	H2	TP3341	B4	VR3706	J1
IC3100	D1	IC3589	G4	Q3906	G1	TP3342	B4	VR3801	H1
IC3109	D2	IC3591	G4	Q3907	H1	TP3343	B4	VR3802	I1
IC3150	D3	IC3592	H4	Q3950	F1	TP3370	B4	VR3803	I1
IC3160	B1	IC3593	H4	Q3951	F1	TP3371	B4	VR3804	I1
IC3161	B1	IC3595	H4	Q3952	F1	TP3372	B4	VR3805	I1
IC3165	B1	IC3600	I4	Q3953	F1	TP3373	B4	VR3806	H1
IC3167	C2	IC3601	I4	Q3957	G1	TP3550	A3	VR3807	H1
IC3169	C2	IC3602	I4	Q3995	E2	TP3551	A3	VR3808	I1
IC3171	B1	IC3603	J4	QR3800	I2	TP3552	A4	VR3809	I1
IC3200	A2	IC3606	I4	QR3801	I2	TP3553	A4	VR3810	I1
IC3202	B1	IC3650	G2	SW3950	F1	TP3650	G3	VR3900	G1
IC3262	A1	IC3700	H4	TG3001	I5	TP3651	F2	VR3901	G1
IC3280	C2	IC3801	H2	TG3002	D2	TP3950	F2	VR3902	G1
IC3281	C2	IC3805	I2	TG3003	B1	VC3070	D1	VR3903	G1
IC3340	A4	IC3901	H2	TG3004	H3	VC3800	H1	VR3904	G1
IC3350	D4	IC3902	G2	TP3050	E4	VR3100	C1	VR3905	G1
IC3370	C4	IC3990	G2	TP3051	E3	VR3101	C1	VR3950	F1
IC3371	B4	IC3996	F2	TP3052	E3	VR3102	C1	VR3995	E2
IC3502	F4	IC3998	E1	TP3070	D1	VR3160	C1	VR3996	F2
IC3504	F4	P3001	G5	TP3100	E1	VR3201	A1		
IC3506	D3	P3002	D5	TP3101	E1	VR3260	A1		
IC3507	F3	P3370	A3	TP3102	E1	VR3280	C1		
IC3510	F3	Q3070	E2	TP3103	D2	VR3700	I1		
IC3511	F3	Q3704	H3	TP3104	D2	VR3701	I2		
IC3552	G4	Q3712	J3	TP3105	E4	VR3702	H2		

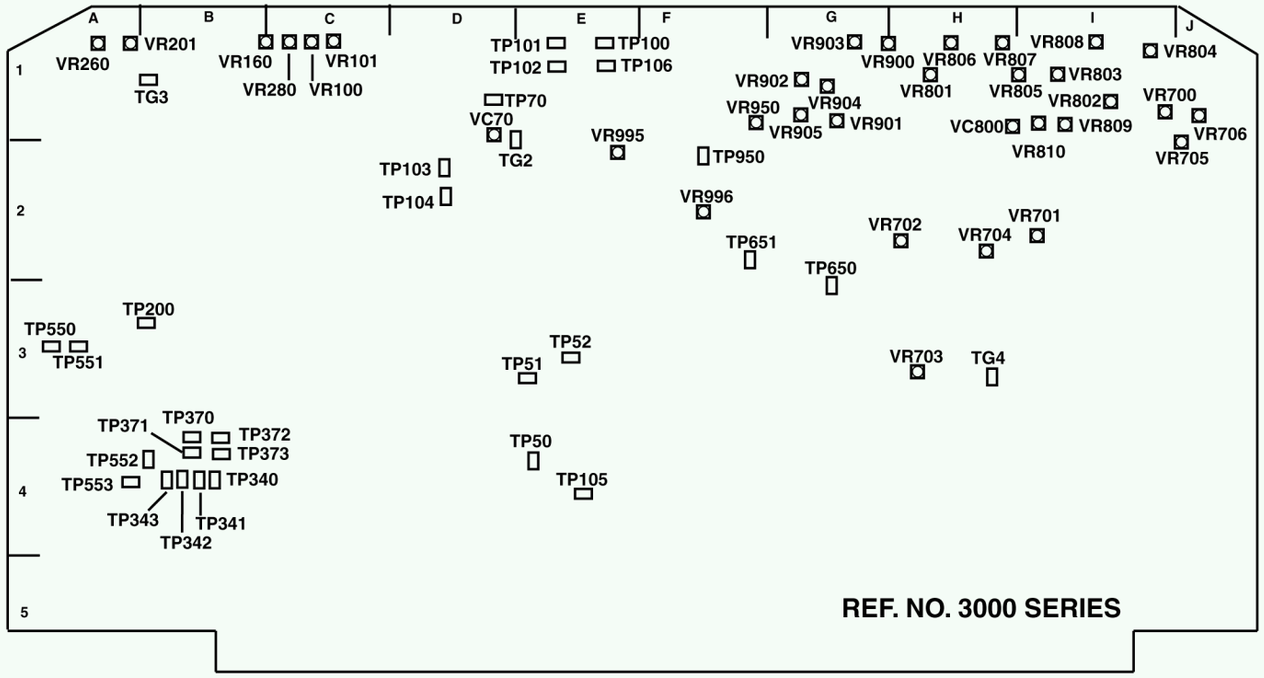

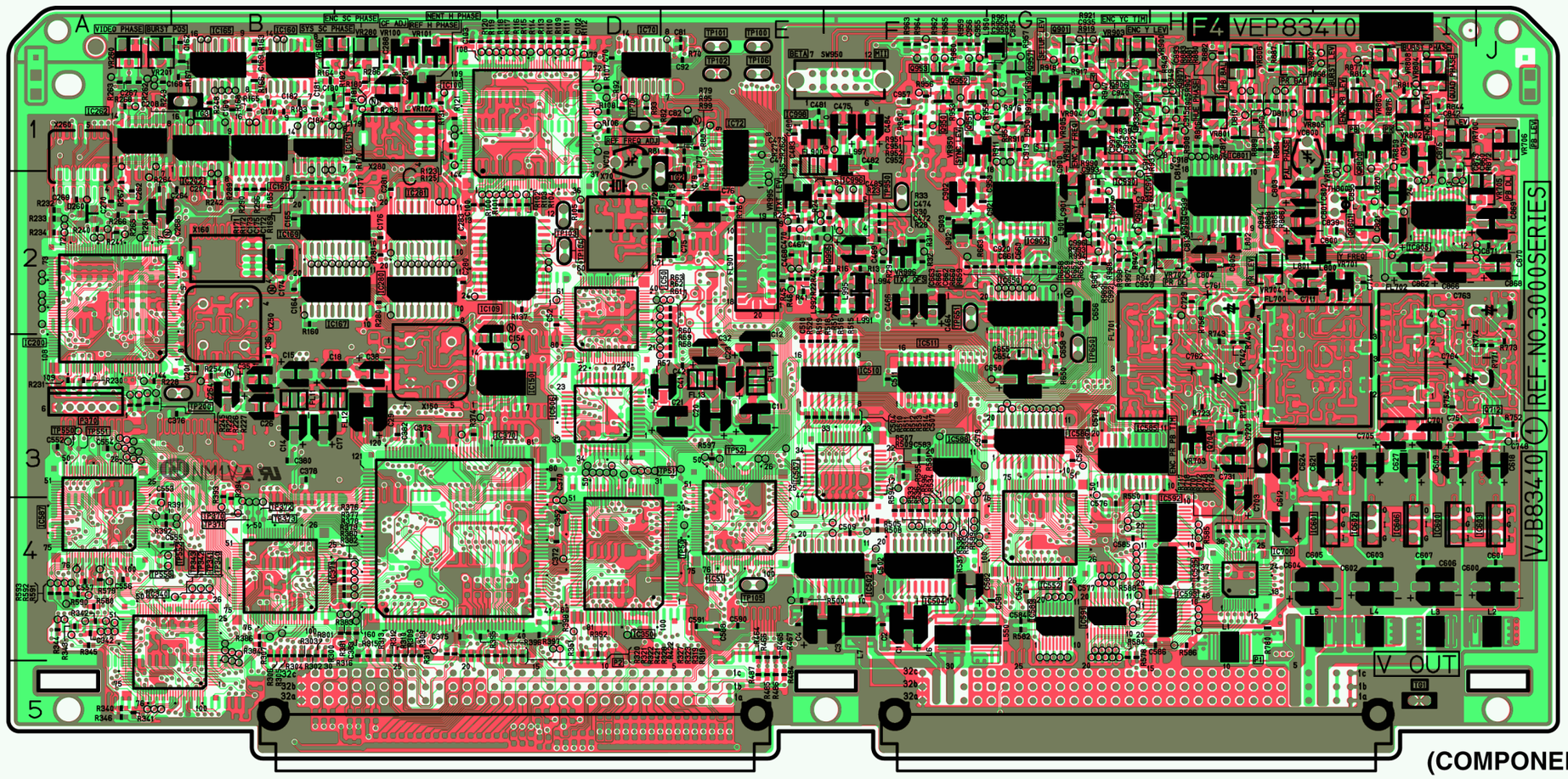

(COMPONENT SIDE)

CBA-6

CBA-6

V OUT P.C.BOARD (NTSC:VEP83410A,NTSC:83410C,PAL:VEP83410B)

FOIL SIDE

REF	LOC	REF	LOC	REF	LOC	REF	LOC	REF	LOC
IC3010	E3	IC3261	A1	IC3503	F4	Q3703	G3	Q3813	H1
IC3011	B3	IC3263	A1	IC3505	F4	Q3707	G3	Q3814	H1
IC3012	C3	IC3264	A2	IC3508	F3	Q3708	H2	Q3900	G1
IC3013	E3	IC3265	A1	IC3509	F3	Q3709	H3	Q3902	G1
IC3014	B3	IC3282	C2	IC3550	G3	Q3710	H3	Q3908	G1
IC3015	C3	IC3283	C2	IC3551	G3	Q3711	I3	Q3954	F1
IC3016	E3	IC3284	C1	IC3581	G4	Q3715	I3	Q3955	F1
IC3071	E2	IC3300	B4	IC3582	G4	Q3716	I2	Q3956	F1
IC3073	E1	IC3301	C4	IC3583	G4	Q3717	I3	Q3958	F1
IC3074	D1	IC3302	C4	IC3584	G4	Q3718	H3	Q3959	F1
IC3101	C1	IC3303	D4	IC3596	F4	Q3719	I3	Q3960	F1
IC3102	D1	IC3304	C4	IC3604	I3	Q3720	H3	Q3990	G2
IC3103	C1	IC3330	A3	IC3605	H3	Q3721	I3	Q3991	G2
IC3104	D1	IC3331	B3	IC3651	G2	Q3722	H2	Q3996	F2
IC3105	D1	IC3372	B4	IC3702	H3	Q3723	I2	Q3997	E2
IC3106	A3	IC3373	C3	IC3703	H3	Q3724	H2	QR3900	G1
IC3111	D2	IC3374	C3	IC3704	J3	Q3800	I1	QR3901	G1
IC3112	D2	IC3430	B5	IC3802	H2	Q3801	I1	QR3902	G1
IC3151	C3	IC3432	D4	IC3804	H1	Q3802	I1		
IC3162	B1	IC3433	E4	IC3900	G1	Q3803	I2		
IC3163	B1	IC3434	E4	IC3903	G1	Q3804	I2		
IC3164	B1	IC3435	A5	IC3904	H1	Q3805	I1		
IC3166	B1	IC3436	D4	IC3995	F2	Q3806	I1		
IC3168	C2	IC3437	D3	IC3997	F1	Q3807	I1		
IC3170	B2	IC3438	A4	Q3071	D2	Q3808	I2		
IC3172	C2	IC3439	A4	Q3072	D2	Q3809	J2		
IC3250	A3	IC3440	B4	Q3700	H3	Q3810	H1		
IC3251	B3	IC3500	F4	Q3701	H3	Q3811	I1		
IC3260	A2	IC3501	F4	Q3702	H2	Q3812	H1		

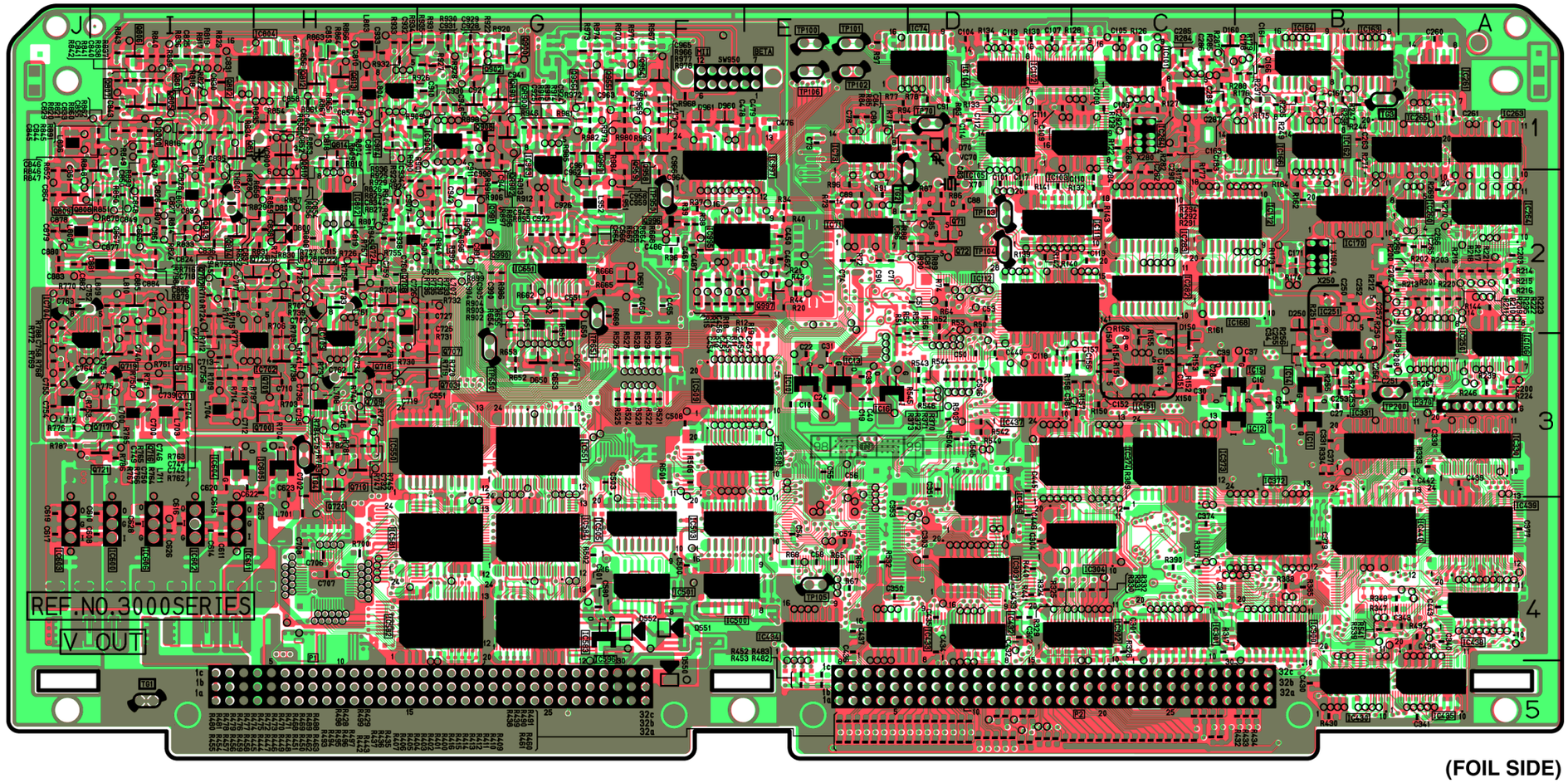

(FOIL SIDE)

CBA-7

V IN -PAL P.C.BOARD FOR PAL (PAL:VEP83449A)

COMPONENT SIDE

REF	LOC	REF	LOC	REF	LOC	REF	LOC	REF	LOC	REF	LOC
IC51	I4	IC451	H1	IC955	E3	TP201	E3	TP951	C4	VR752	B1
IC52	I4	IC452	H1	IC956	E3	TP202	E4	TP952	F4	VR753	A1
IC53	I5	IC453	H1	IC957	F3	TP203	E3	VL551	F2	VR952	E2
IC54	H4	IC455	F1	IC958	E2	TP204	F4	VR251	I3		
IC102	H4	IC456	F1	IC981	E4	TP205	E4	VR301	I2		
IC110	G4	IC504	G3	IC985	D4	TP206	F4	VR351	I1		
IC153	B4	IC505	B3	IC986	D4	TP207	F4	VR352	I1		
IC164	C4	IC507	H3	P1	G5	TP208	F4	VR353	H1		
IC165	C4	IC551	G3	P2	D5	TP209	F4	VR354	H1		
IC201	F4	IC552	G2	P41	E1	TP210	F4	VR406	H1		
IC203	B4	IC554	F3	Q455	G1	TP211	F4	VR407	H2		
IC251	H3	IC567	G3	Q456	G1	TP212	F4	VR408	H1		
IC259	H4	IC655	D2	Q458	F1	TP213	F4	VR409	G2		
IC303	I3	IC656	C3	Q466	E1	TP214	F4	VR410	G2		
IC304	J3	IC660	C3	Q501	B2	TP215	F4	VR459	G1		
IC308	J2	IC705	C2	Q502	B2	TP216	F4	VR460	G1		
IC354	I2	IC706	A2	Q601	E2	TP217	F4	VR461	F1		
IC355	I1	IC710	A2	Q602	E1	TP218	F4	VR462	F1		
IC356	I2	IC711	A2	Q603	E2	TP301	I2	VR463	G1		
IC357	I1	IC712	D1	TG1	B2	TP401	F2	VR464	F1		
IC358	H1	IC755	C1	TG2	H1	TP402	G2	VR465	F1		
IC359	I1	IC756	B1	TG3	B3	TP403	G2	VR466	E1		
IC402	H3	IC760	A1	TG4	F4	TP405	G2	VR551	E2		
IC403	H2	IC762	D1	TG5	D2	TP451	H1	VR552	F2		
IC404	H2	IC802	B3	TG6	F4	TP551	F3	VR651	C3		
IC410	F2	IC854	B4	TP151	C4	TP552	F2	VR652	C2		
IC414	F2	IC855	A4	TP152	C4	TP553	E2	VR701	B2		
IC418	F2	IC856	B4	TP153	C4	TP651	C3	VR702	A2		
IC423	G2	IC902	G4	TP154	B4	TP701	A2	VR703	A2		
IC428	H3	IC903	G4	TP155	B4	TP751	B1	VR751	B1		

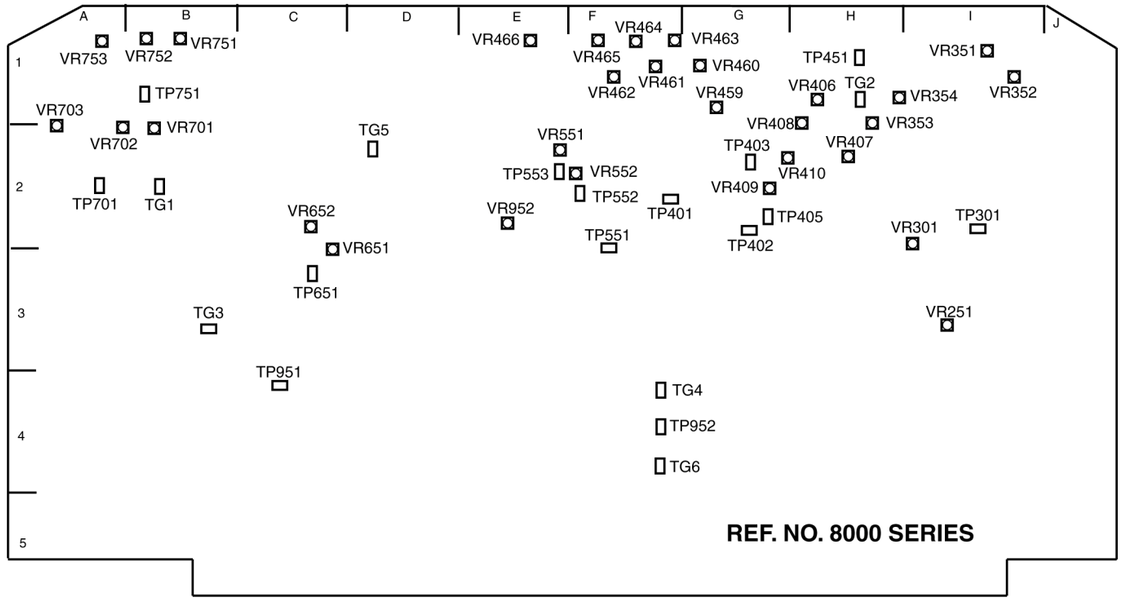

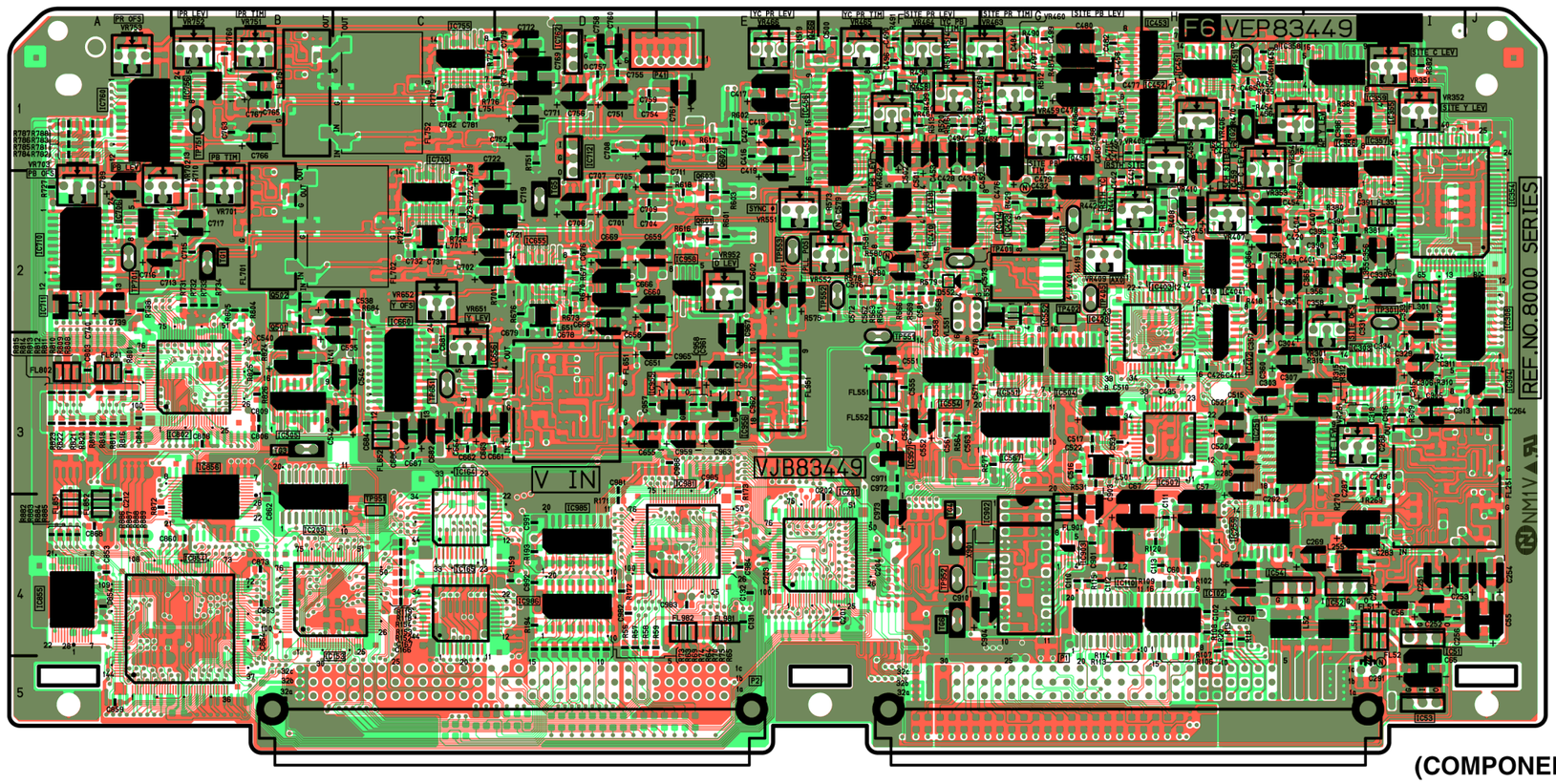

(COMPONENT SIDE)

CBA-14

CBA-14

V IN-PAL P.C.BOARD FOR PAL (VEP83449A)

FOIL SIDE

REF	LOC	REF	LOC	REF	LOC	REF	LOC
IC101	H4	IC557	F3	IC983	E4	Q608	E2
IC103	G4	IC560	F2	Q251	I4	Q651	D3
IC107	H4	IC561	F2	Q252	I3	Q652	D3
IC151	F4	IC562	F3	Q253	I4	Q653	C2
IC152	C4	IC651	D2	Q301	I3	Q654	D2
IC156	C4	IC652	D3	Q302	I3	Q655	D2
IC204	E4	IC653	D3	Q303	I3	Q656	D2
IC210	E3	IC661	C3	Q351	I2	Q657	C3
IC252	I3	IC701	D1	Q352	H2	Q701	C2
IC254	J3	IC702	D2	Q401	G2	Q702	B2
IC255	H4	IC703	D2	Q402	G2	Q703	B2
IC256	H4	IC713	A2	Q451	H1	Q704	C2
IC257	I4	IC751	D1	Q452	H1	Q705	C2
IC258	I4	IC752	D1	Q453	G1	Q706	C2
IC301	H3	IC753	D1	Q454	G1	Q751	C1
IC302	H3	IC761	A2	Q457	G1	Q752	B1
IC309	I2	IC763	A1	Q459	G1	Q753	B1
IC351	I2	IC801	A3	Q460	F1	Q754	D1
IC352	I2	IC803	B3	Q461	F1	Q755	C1
IC353	H3	IC853	B4	Q462	F1	Q756	C1
IC401	H2	IC857	B5	Q463	G1	Q951	E3
IC406	E1	IC858	A5	Q464	F1	Q952	E3
IC407	E1	IC859	A4	Q465	F1	Q953	E3
IC419	H3	IC860	B4	Q467	F1	Q954	E2
IC459	F2	IC861	A4	Q551	G3	QR151	C4
IC460	F2	IC862	B4	Q552	G3	QR501	H4
IC501	H3	IC901	G4	Q553	G3		
IC502	H3	IC954	E3	Q554	F3		
IC503	G3	IC959	F4	Q606	E2		
IC506	C2	IC982	E4	Q607	E1		

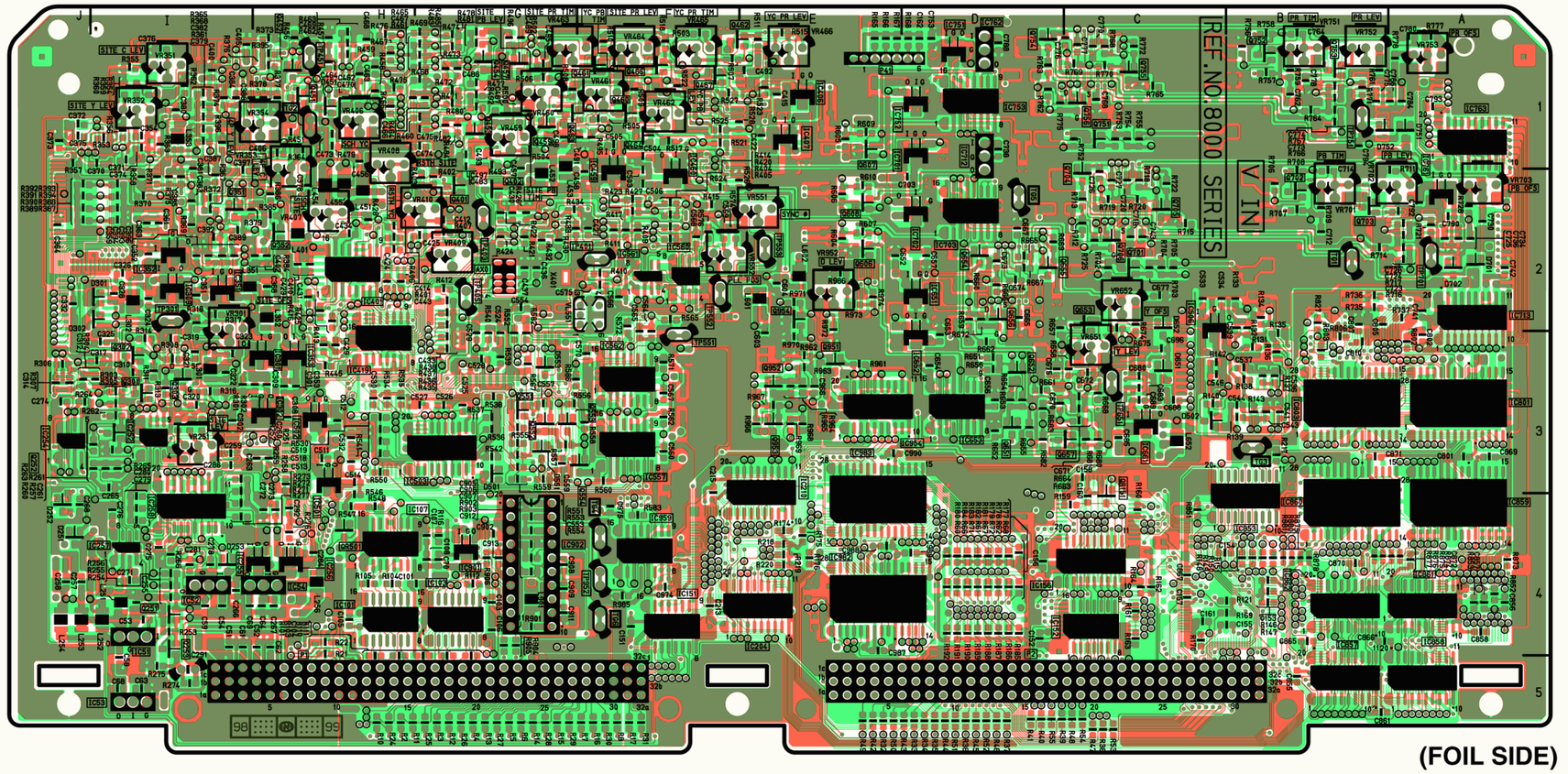

(FOIL SIDE)

CBA-15

CBA-15

A ADDA P.C.BOARD (VEP84301B)

COMPONENT SIDE

REF	LOC	REF	LOC	REF	LOC	REF	LOC	REF	LOC
IC4001	I4	IC4355	B1	IC4938	F3	QR4402	H2	TP4401	H2
IC4002	I4	IC4357	B2	IC4939	E3	QR4476	H2	TP4476	G2
IC4006	I3	IC4358	A1	IC4940	E3	QR4477	H2	TP4551	B2
IC4008	J4	IC4401	H2	P4001	G5	QR4551	B2	TP4626	A2
IC4009	I3	IC4407	G4	P4002	D5	QR4552	B2	TP4701	E1
IC4041	H4	IC4408	H4	Q4402	H3	QR4626	A2	TP4702	F1
IC4042	I4	IC4476	G2	Q4403	H3	QR4627	A2	TP4703	D1
IC4047	H4	IC4480	G4	Q4404	H3	QR4701	F1	TP4704	G1
IC4048	H3	IC4481	G4	Q4405	G3	QR4702	D1	VR4001	J4
IC4049	H3	IC4551	B2	Q4477	G3	QR4703	F1	VR4002	J3
IC4101	C4	IC4557	B4	Q4478	G3	QR4704	D1	VR4041	I4
IC4102	C4	IC4558	B4	Q4479	G3	QR4705	F1	VR4042	I3
IC4106	C3	IC4626	A2	Q4480	G3	QR4752	F3	VR4101	D4
IC4108	D4	IC4630	A4	Q4552	B3	SW4001	I4	VR4102	D3
IC4109	C3	IC4631	A4	Q4553	B3	SW4041	I4	VR4141	C4
IC4141	C4	IC4702	F1	Q4554	B3	SW4101	D4	VR4142	C3
IC4142	C4	IC4753	F2	Q4555	B3	SW4141	C4	VR4401	H2
IC4147	C4	IC4754	F2	Q4627	B3	TG4202	I2	VR4402	H3
IC4148	C3	IC4755	G1	Q4628	A3	TG4252	C2	VR4476	G2
IC4149	C3	IC4756	G1	Q4629	A3	TG4301	G1	VR4477	G3
IC4203	I2	IC4757	F2	Q4630	A3	TG4351	A1	VR4551	B2
IC4204	I2	IC4758	G2	Q4753	F4	TP4201	I2	VR4552	B3
IC4205	I1	IC4833	D2	Q4755	F2	TP4202	I2	VR4626	A2
IC4253	C2	IC4834	E2	Q4756	F2	TP4203	H1	VR4627	A3
IC4254	C2	IC4835	E1	Q4757	F2	TP4251	C2	VR4701	D1
IC4255	C1	IC4836	D1	Q4758	G2	TP4252	B2	VR4702	F1
IC4302	H1	IC4837	E2	Q4831	E2	TP4253	B1	VR4751	G2
IC4305	H1	IC4838	D2	Q4832	E2	TP4301	G1	VR4831	D2
IC4307	H2	IC4931	E4	Q4833	D2	TP4302	H1		
IC4308	G1	IC4932	F4	Q4834	E2	TP4351	A1		
IC4352	B1	IC4935	F4	QR4401	H2	TP4352	B1		

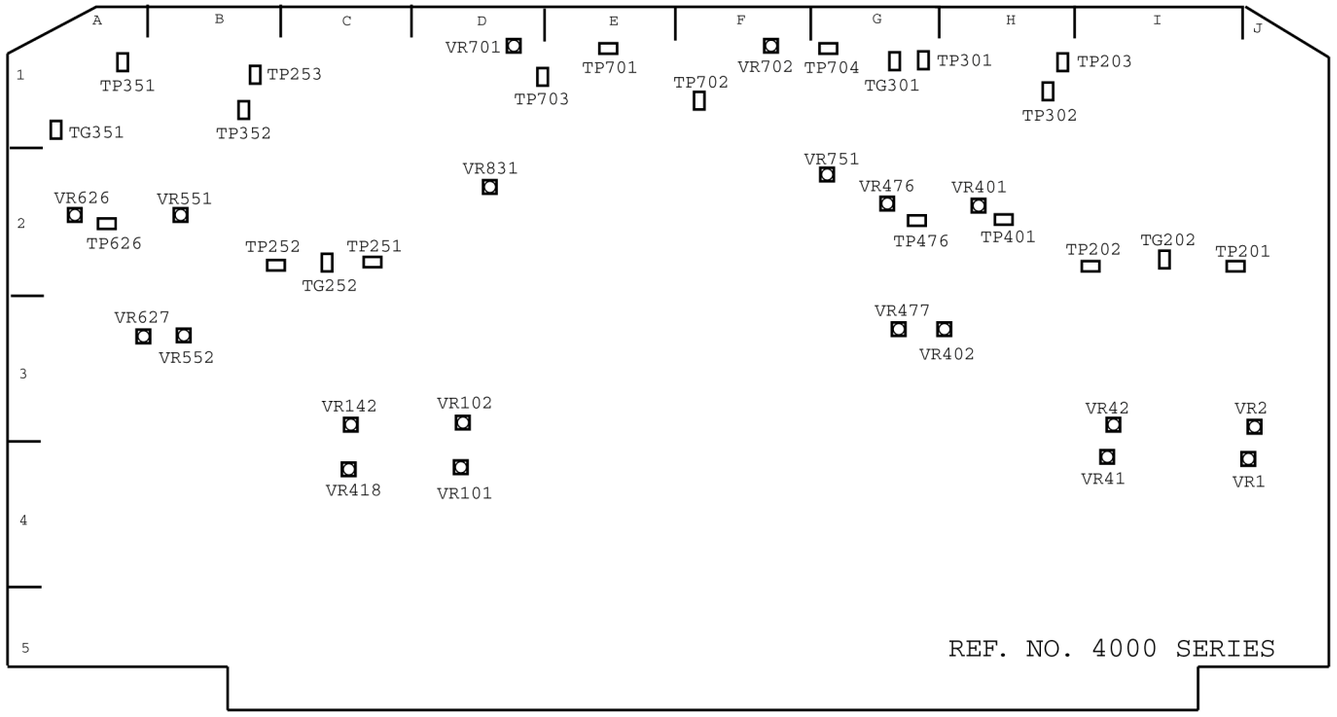

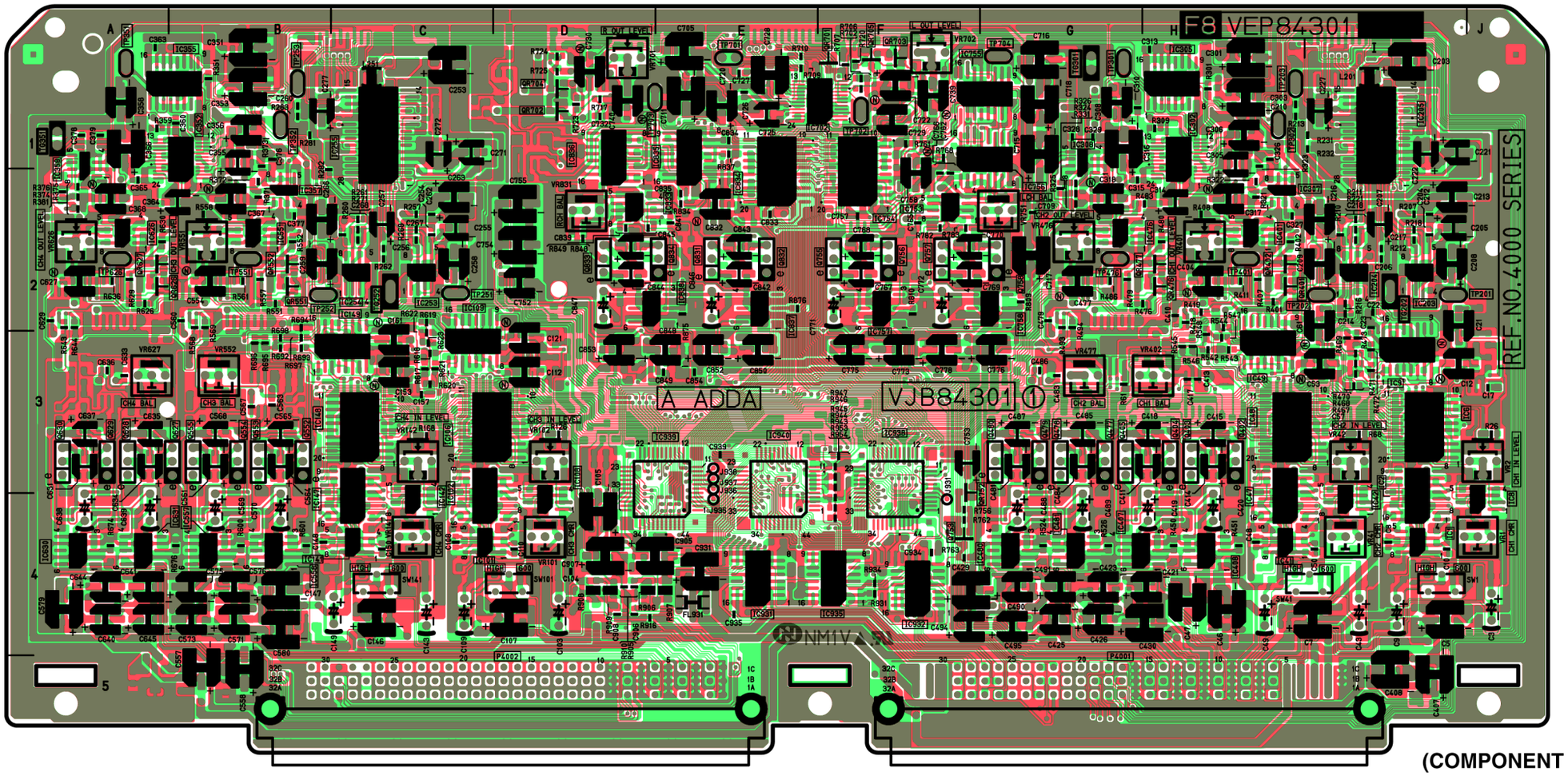

(COMPONENT SIDE)

CBA-18

A ADDA P.C.BOARD (VEP84301B)

FOIL SIDE

REF	LOC	REF	LOC	REF	LOC	REF	LOC
IC4003	I4	IC4405	H3	IC4937	F4	Q4836	E3
IC4004	H4	IC4406	H2	Q4003	I3	Q4901	D4
IC4005	I3	IC4477	G2	Q4041	H3	Q4902	D4
IC4007	J3	IC4478	G3	Q4103	C3	Q4903	D4
IC4043	H4	IC4479	G2	Q4141	C3	Q4904	D4
IC4044	H4	IC4552	B5	Q4301	H1	QR4001	I3
IC4045	H3	IC4553	A5	Q4302	G1	QR4002	I3
IC4046	I3	IC4554	B2	Q4351	B1	QR4041	H3
IC4103	D4	IC4555	B3	Q4352	A2	QR4042	H3
IC4104	D4	IC4556	B2	Q4401	H2	QR4101	C3
IC4105	C3	IC4627	A2	Q4406	G4	QR4102	C3
IC4107	D3	IC4628	A3	Q4407	G4	QR4141	B3
IC4143	B4	IC4629	A2	Q4476	H2	QR4142	B3
IC4144	C4	IC4701	E1	Q4481	G4	QR4301	H1
IC4145	C3	IC4703	F1	Q4482	G4	QR4302	F3
IC4146	C3	IC4704	D1	Q4551	B2	QR4303	E3
IC4201	I1	IC4707	G1	Q4556	B4	QR4351	B1
IC4202	I1	IC4708	G1	Q4557	B4	QR4751	D3
IC4251	C1	IC4709	G2	Q4626	A2		
IC4252	C1	IC4710	G2	Q4631	A4		
IC4301	H1	IC4711	E1	Q4632	A4		
IC4303	H2	IC4712	F2	Q4701	D1		
IC4304	G2	IC4713	D1	Q4702	F1		
IC4306	H1	IC4751	F1	Q4703	F1		
IC4351	B1	IC4752	G1	Q4704	D1		
IC4353	B2	IC4831	E2	Q4751	D3		
IC4354	A2	IC4832	E2	Q4752	D3		
IC4356	A1	IC4901	D4	Q4754	D3		
IC4402	I5	IC4933	E4	Q4759	F3		
IC4403	I5	IC4934	F4	Q4760	F3		
IC4404	H2	IC4936	F4	Q4835	E3		

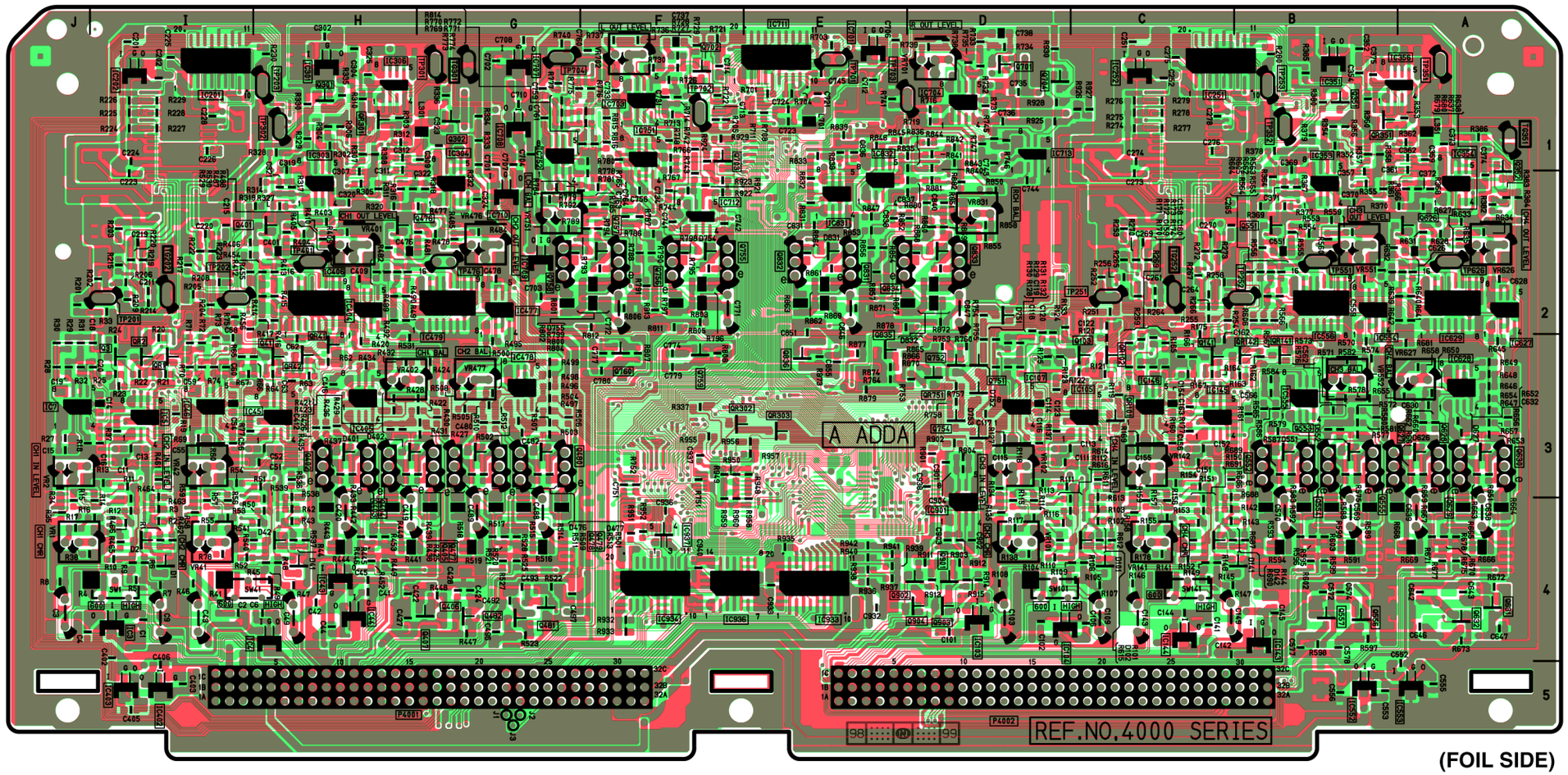

(FOIL SIDE)

CBA-19

CUE P.C.BOARD (VEP84302C)

COMPONENT SIDE

REF	LOC	REF	LOC	REF	LOC
IC4001	E1	IC4302	B4	QR4001	B1
IC4005	C1	IC4305	B4	SW4001	E1
IC4006	D1	IC4307	B3	SW4002	C2
IC4008	C2	IC4308	B3	SW4101	D4
IC4009	D4	IC4404	A3	TG4101	E2
IC4010	D4	IC4405	A3	TG4201	A1
IC4011	C2	IC4407	C3	TP4001	D2
IC4012	B1	IC4501	A3	TP4002	B1
IC4014	D1	IC4502	A4	TP4003	B1
IC4015	C2	IC4504	B4	TP4101	E3
IC4016	C2	IC4506	B4	TP4102	E2
IC4101	D3	IC4507	A3	TP4103	E2
IC4102	D3	P4001	C5	TP4201	C3
IC4107	D2	P4002	B1	TP4202	A1
IC4108	E2	P4003	A1	TP4203	A1
IC4109	E2	Q4001	B1	VR4001	D1
IC4110	C4	Q4002	B1	VR4002	C1
IC4111	E3	Q4004	B1	VR4003	B1
IC4112	D4	Q4005	B1	VR4004	B2
IC4113	D4	Q4201	D4	VR4005	D1
IC4114	E4	Q4202	C4	VR4006	C2
IC4201	C3	Q4203	C4	VR4007	C1
IC4204	D4	Q4204	C4	VR4201	C3
IC4205	C4	Q4207	A2	VR4202	B1
IC4206	A2	Q4213	A2		
IC4301	A4	Q4214	A2		

FOIL SIDE

REF	LOC	REF	LOC
IC4002	D1	Q4101	E4
IC4003	D2	Q4102	E3
IC4004	C1	Q4103	E3
IC4013	C1	Q4205	C4
IC4103	D3	Q4206	C4
IC4104	E3	Q4208	A2
IC4105	E3	Q4209	B2
IC4106	D3	Q4210	B2
IC4115	E4	Q4211	B2
IC4116	D4	Q4212	B2
IC4117	D3	Q4215	A2
IC4202	C2	Q4216	A2
IC4203	C3	Q4217	A2
IC4207	C2	Q4218	B2
IC4303	A4	Q4219	B2
IC4304	B4	QR4002	B1
IC4306	B4	QR4201	C4
IC4401	A3		
IC4402	A3		
IC4403	B4		
IC4406	D3		
IC4408	A3		
IC4503	A4		
IC4505	B4		
Q4003	B1		
Q4006	B1		

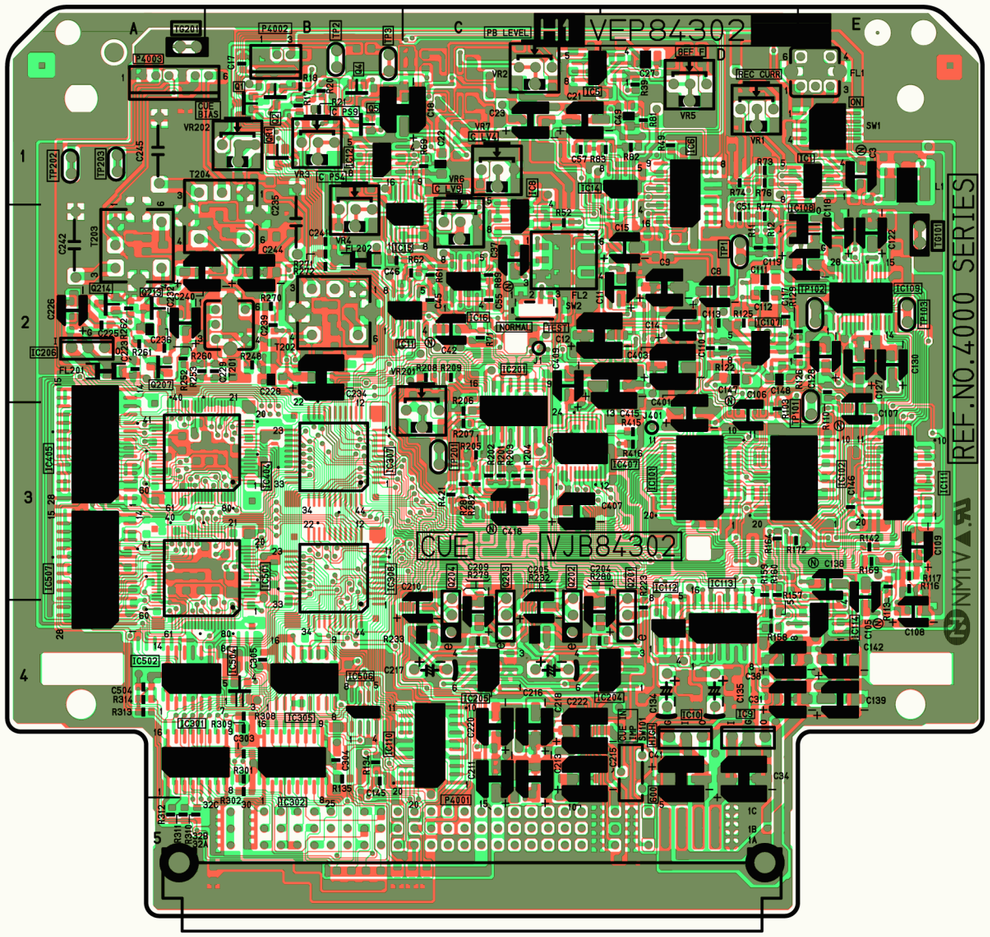

(COMPONENT SIDE)

CBA-1

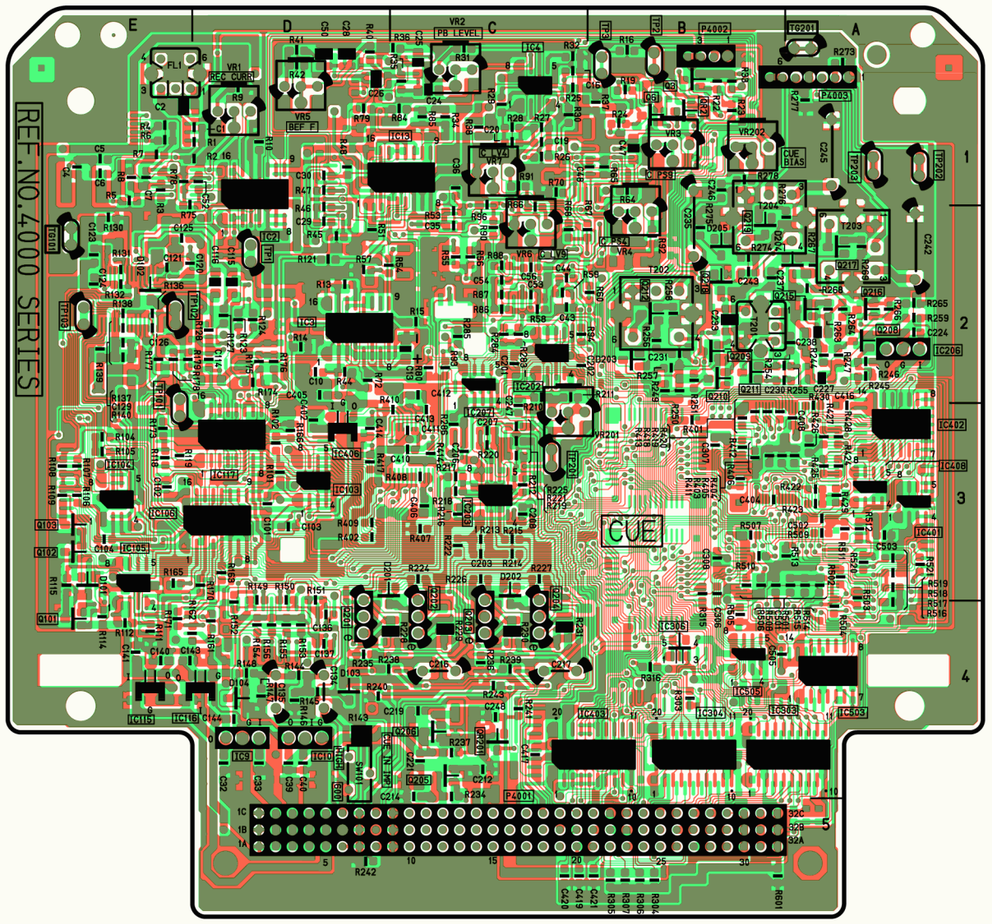

(FOIL SIDE)

CBA-1

A PROC P.C.BOARD(VEP84326A)

COMPONENT SIDE

REF	LOC	REF	LOC	REF	LOC	REF	LOC
IC15	F4	IC301	G3	IC873	H4	TP222	D4
IC16	E4	IC340	A4	IC921	I2	TP223	E4
IC17	C4	IC342	B1	P1	G5	TP260	E1
IC18	C4	IC381	B4	P2	D5	TP261	E1
IC19	F4	IC430	B2	P340	A1	TP262	E2
IC20	E4	IC432	A2	P650	G1	TP263	E2
IC22	D4	IC434	A2	P970	F2	TP264	E2
IC23	E4	IC435	B2	SW750	B4	TP265	E2
IC24	F4	IC436	A1	SW751	C4	TP340	A4
IC25	E4	IC490	B2	SW820	I5	TP341	A4
IC26	D4	IC491	A3	SW821	J4	TP342	B4
IC27	D4	IC492	B3	SW870	H4	TP343	B4
IC112	F3	IC493	A3	SW871	I4	TP344	A4
IC114	F2	IC531	C2	TG1	B4	TP345	A4
IC115	F3	IC533	C1	TG2	F4	TP346	A4
IC117	E4	IC592	C2	TG3	J3	TP347	A4
IC118	F1	IC594	C3	TG4	J1	TP348	A4
IC119	F2	IC651	H2	TG5	E1	TP349	A4
IC190	E2	IC652	H2	TG6	B1	TP530	B1
IC192	E3	IC653	G1	TG260	E2	TP531	B1
IC193	E3	IC720	D2	TP15	F3	TP532	B1
IC221	D4	IC721	E2	TP16	E4	TP590	B2
IC222	C4	IC722	D2	TP17	F3	TP591	B2
IC224	D3	IC723	E2	TP190	E2	TP592	B2
IC225	D4	IC750	B4	TP191	E3	VR260	D1
IC228	E2	IC751	B4	TP192	E2	VR261	E1
IC260	D2	IC821	H3	TP193	E3		
IC261	E2	IC823	J4	TP194	E3		
IC267	E1	IC826	H4	TP220	D4		
IC300	G4	IC870	I4	TP221	E3		

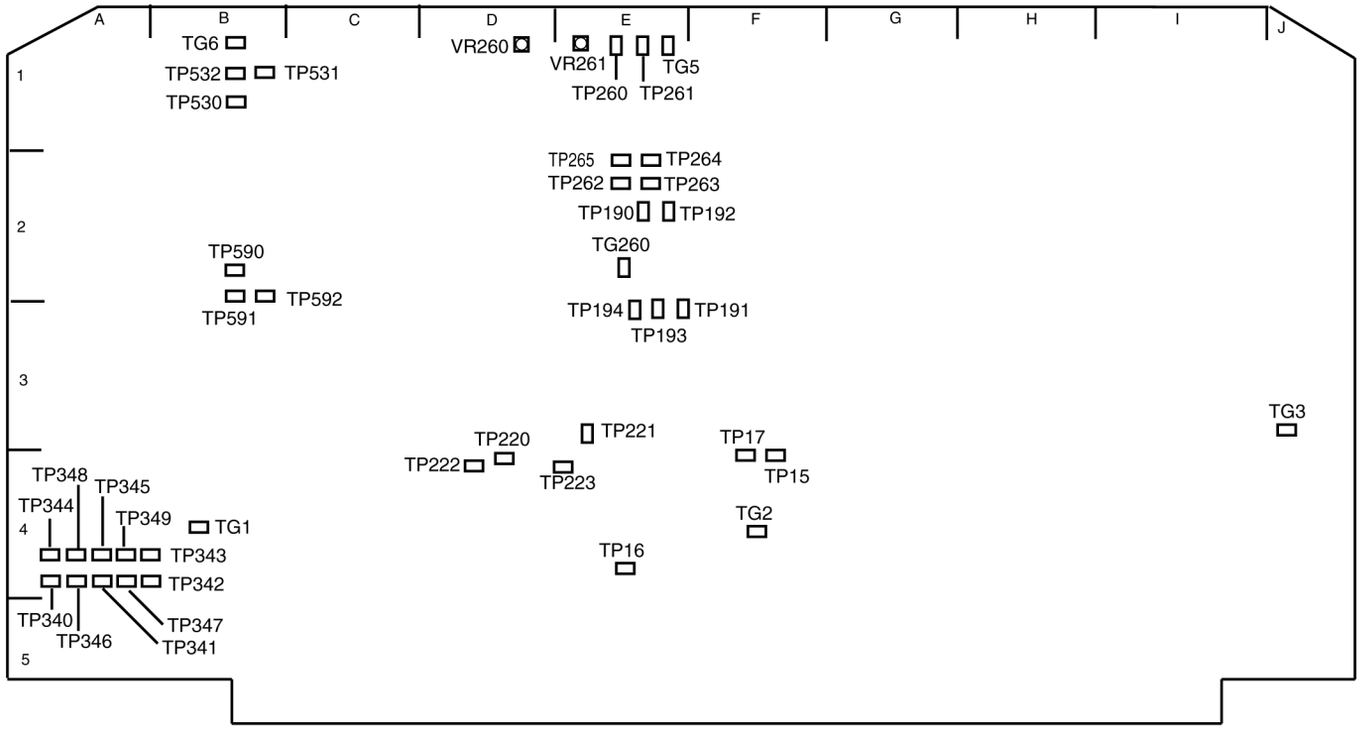

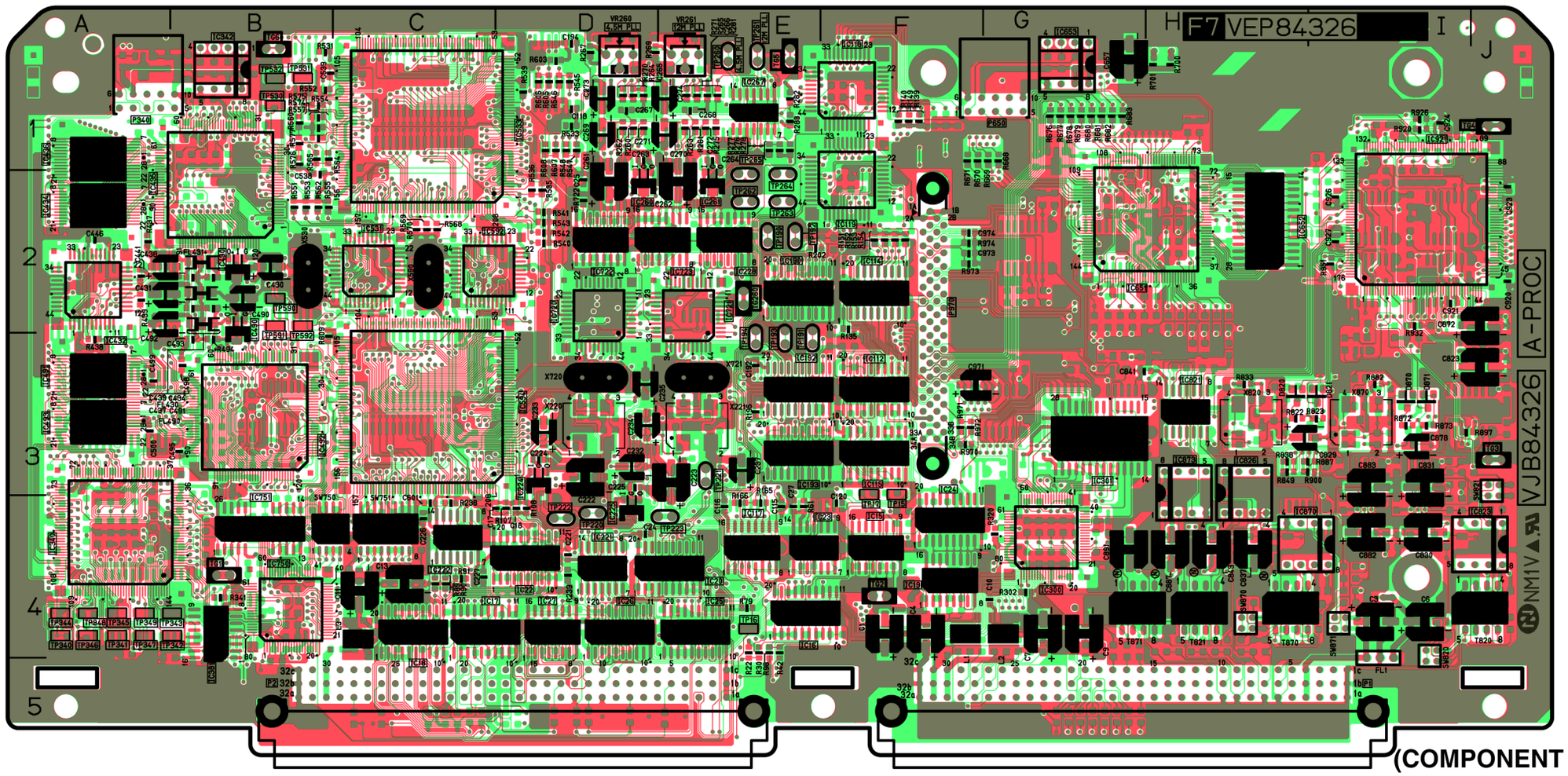

(COMPONENT SIDE)

CBA-16

CBA-16

A PROC P.C.BOARD(VEP84326A)

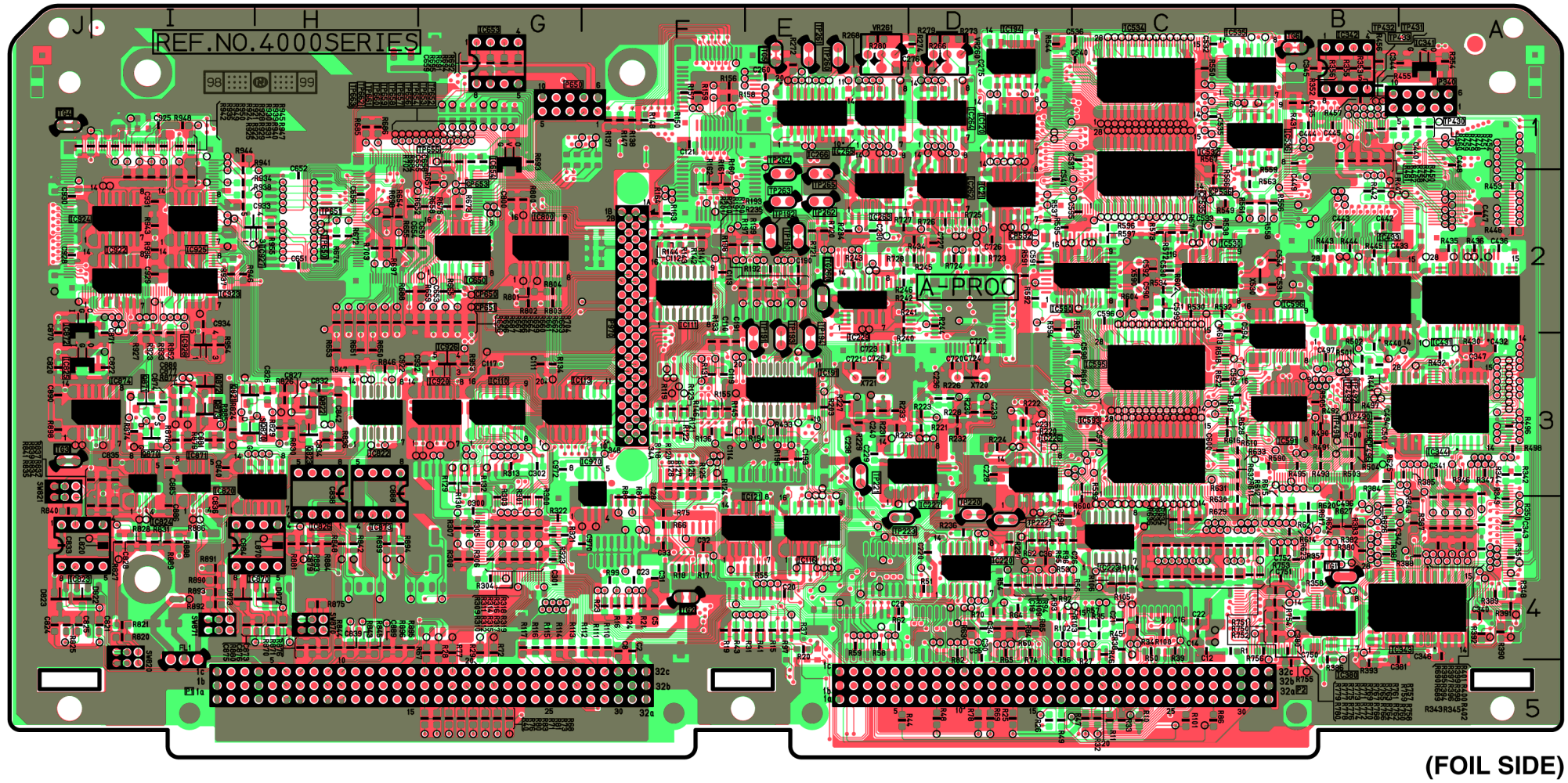

(FOIL SIDE)

CBA-17

CBA-17

EQ P.C.BOARD (VEP85048A)

COMPONENT SIDE

REF	LOC	REF	LOC
IC5955	E2	TP5405	D1
IC5956	A2	TP5601	C3
IC5957	E3	TP5602	C3
IC5958	A3	TP5901	C3
P5003	A3	VR5210	E2
P5004	D1	VR5410	D1
P5951	C5	VR5601	B2
P5952	D3		
P5953	C2		
TG5101	A2		
TG5201	C2		
TG5401	D1		
TG5801	D3		
TP5001	B3		
TP5002	D2		
TP5101	A2		
TP5102	B2		
TP5201	D3		
TP5202	D2		
TP5203	E2		
TP5204	D3		
TP5401	D1		
TP5402	C1		
TP5403	C1		
TP5404	B2		

FOIL SIDE

REF	LOC	REF	LOC	REF	LOC	REF	LOC	REF	LOC
IC5001	B1	IC5602	D3	Q5001	D4	Q5204	E2	VR5401	E1
IC5101	D2	IC5603	C3	Q5002	B4	Q5401	C1	VR5402	D1
IC5102	D1	IC5701	B2	Q5003	D4	Q5402	C1	VR5403	D1
IC5201	D5	IC5702	C2	Q5004	A4	Q5403	C1	VR5404	D1
IC5202	D1	IC5703	C3	Q5005	A4	Q5404	D1	VR5406	C1
IC5203	E3	IC5704	C3	Q5006	B3	Q5601	B2	VR5407	D2
IC5204	E1	IC5801	D4	Q5007	B4	Q5602	B2	VR5408	C1
IC5205	D5	IC5802	C4	Q5008	A3	Q5603	C2	VR5409	C1
IC5206	D3	IC5803	D4	Q5009	B3	Q5606	B2	VR5411	C2
IC5207	B3	IC5805	B4	Q5010	B3	Q5607	C2	VR5801	B4
IC5208	B2	IC5806	B4	Q5011	E3	Q5608	B3		
IC5209	A2	IC5807	C4	Q5012	D1	QR5101	B2		
IC5210	A3	IC5808	C4	Q5101	E3	QR5401	B5		
IC5401	B4	IC5809	C4	Q5102	A3	QR5402	B5		
IC5402	B5	IC5810	C4	Q5103	D3	SW5801	B4		
IC5403	B5	IC5811	C5	Q5104	A3	TP5801	B3		
IC5404	B1	IC5901	C3	Q5105	B2	TP5802	B4		
IC5405	D1	IC5902	B4	Q5106	B3	VR5201	B1		
IC5406	B1	IC5903	C4	Q5107	D2	VR5202	A1		
IC5407	B1	IC5904	D4	Q5108	B2	VR5203	B1		
IC5408	C2	IC5951	B3	Q5109	E2	VR5204	B1		
IC5409	C1	IC5952	D3	Q5110	A2	VR5206	A1		
IC5410	C1	IC5953	A1	Q5201	D2	VR5207	B3		
IC5411	C2	IC5954	A4	Q5202	D2	VR5208	A1		
IC5601	D3	IC5959	A3	Q5203	D2	VR5209	A1		

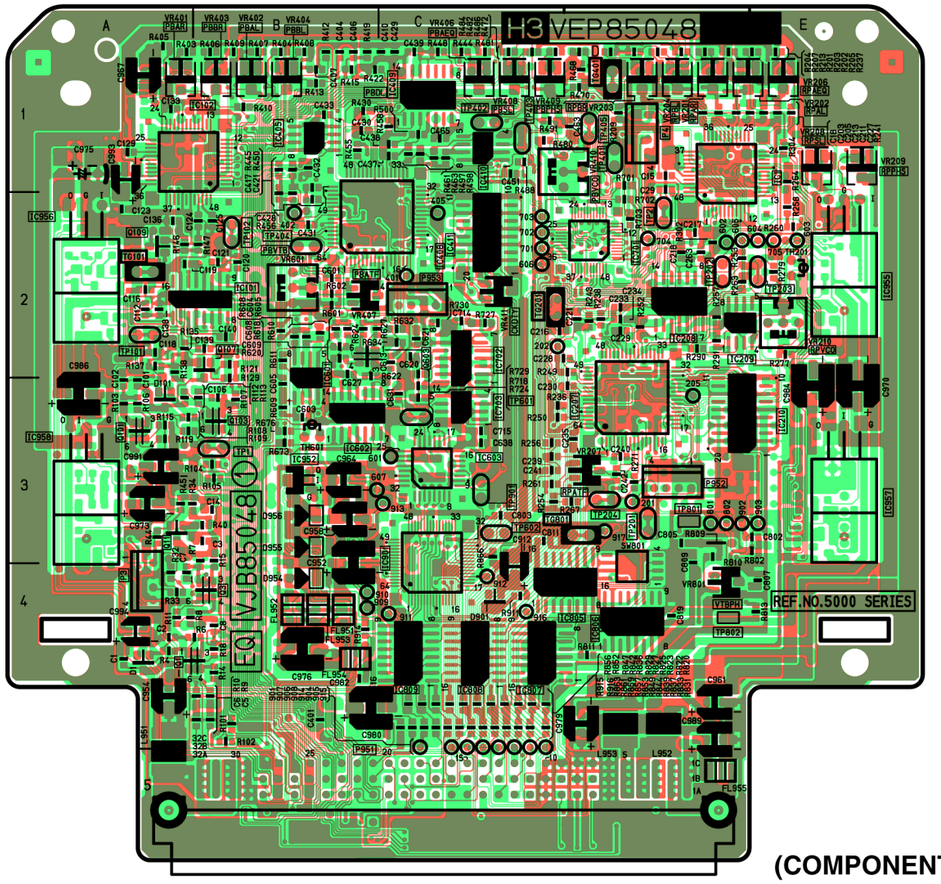

(COMPONENT SIDE)

CBA-20

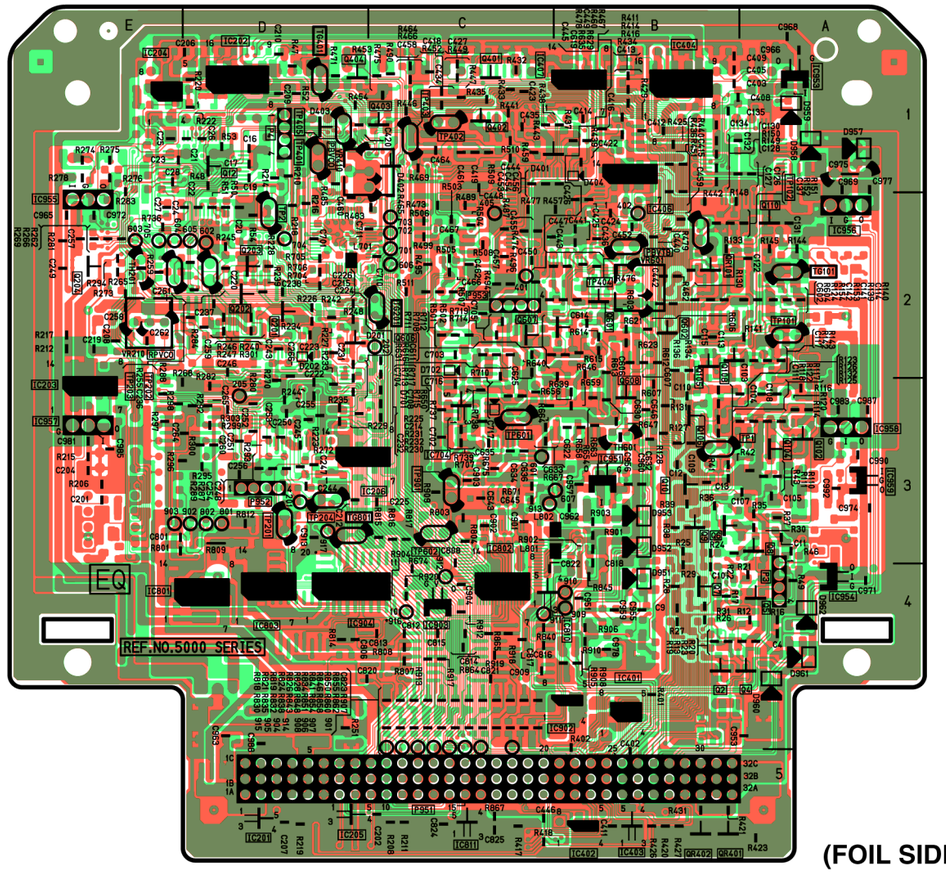

(FOIL SIDE)

CBA-20

RF AMP P.C.BOARD(VEP85049A)

COMPONENT SIDE

REF	LOC	REF	LOC
IC5010	D4	TP5011	E1
IC5011	D4	TP5012	E1
IC5020	D3	TP5015	B1
IC5021	D3	TP5016	B1
IC5022	E3	TP5017	C3
P5001	C5	TP5018	B4
P5002	B2	TP5019	B3
P5003	A2	TP5020	A4
P5004	A4	VC5600	C2
P5005	B4	VC5601	C2
SW5008	C2	VC5700	B2
TG5001	C1	VC5701	B2
TG5002	A1	VR5001	D1
TG5003	E3	VR5002	D1
TG5005	B1	VR5003	D1
TG5006	C2	VR5004	D1
TG5007	C4	VR5005	A1
TG5008	B2	VR5006	A1
TG5009	A3	VR5007	B1
TP5001	C1	VR5008	B1
TP5002	D1	VR5009	C1
TP5003	C3	VR5010	B1
TP5007	D1	VR5011	C1
TP5008	D1	VR5012	C1
TP5009	E3	VR5013	E1
TP5010	E3	VR5014	D1

FOIL SIDE

REF	LOC	REF	LOC	REF	LOC
IC5001	D1	Q5007	D2	Q5702	A2
IC5002	B2	Q5008	E3	Q5703	E2
IC5003	B2	Q5600	D2	Q5704	A2
IC5004	A1	Q5601	B2	Q5705	E2
IC5005	B2	Q5602	B2	Q5706	B3
IC5006	A2	Q5603	D2	Q5707	B3
IC5007	A2	Q5604	B2	Q5708	D2
IC5008	B1	Q5605	C2	Q5709	D2
IC5009	B2	Q5606	C3	Q5710	D2
IC5012	A1	Q5607	C3	Q5711	D3
IC5013	A2	Q5608	C2	Q5712	D3
IC5014	B2	Q5609	C2	Q5713	E2
IC5015	B1	Q5610	C2	Q5714	A3
IC5016	B2	Q5611	C3	Q5715	A3
IC5017	B2	Q5612	C3	Q5716	E3
IC5018	C1	Q5613	D2	Q5717	E3
IC5019	E1	Q5614	B3	Q5718	E3
IC5051	D3	Q5615	B3	Q5719	D3
IC5052	D4	Q5616	D3	Q5720	B3
IC5053	D4	Q5617	D3		
IC5054	E3	Q5618	D3		
IC5055	D4	Q5619	D4		
Q5001	E3	Q5620	D4		
Q5002	A3	Q5621	C3		
Q5005	E2	Q5700	E2		
Q5006	D2	Q5701	A2		

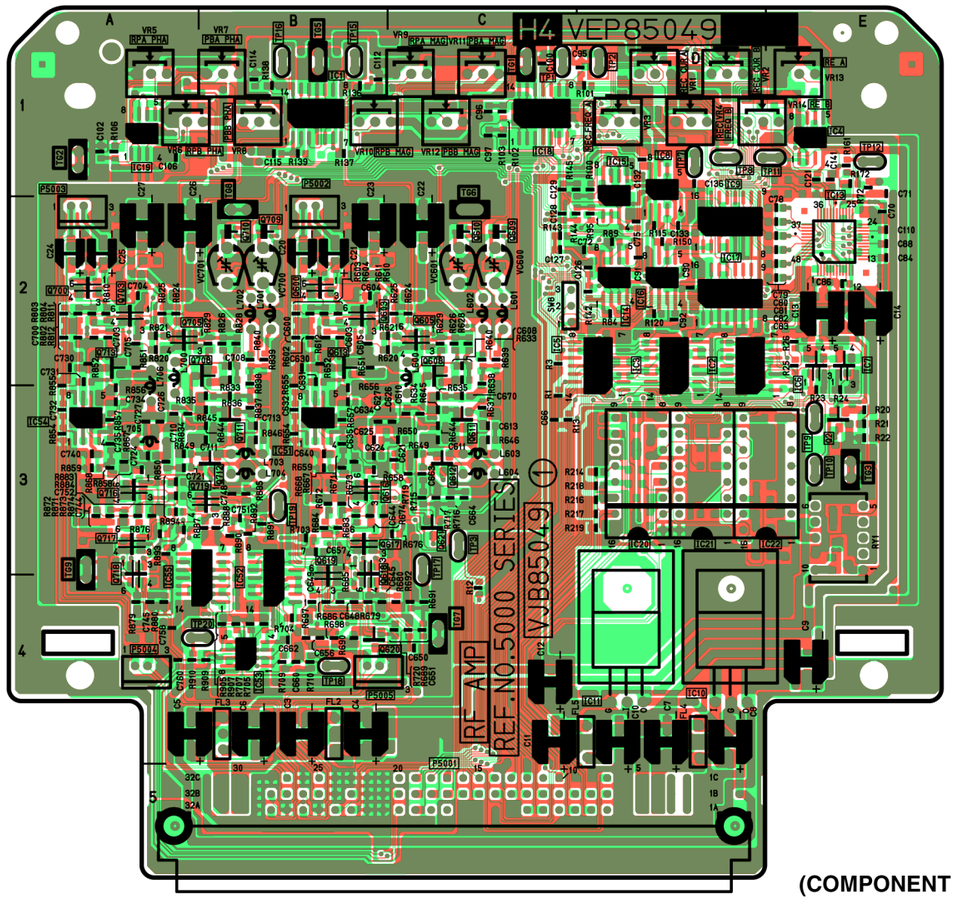

(COMPONENT SIDE)

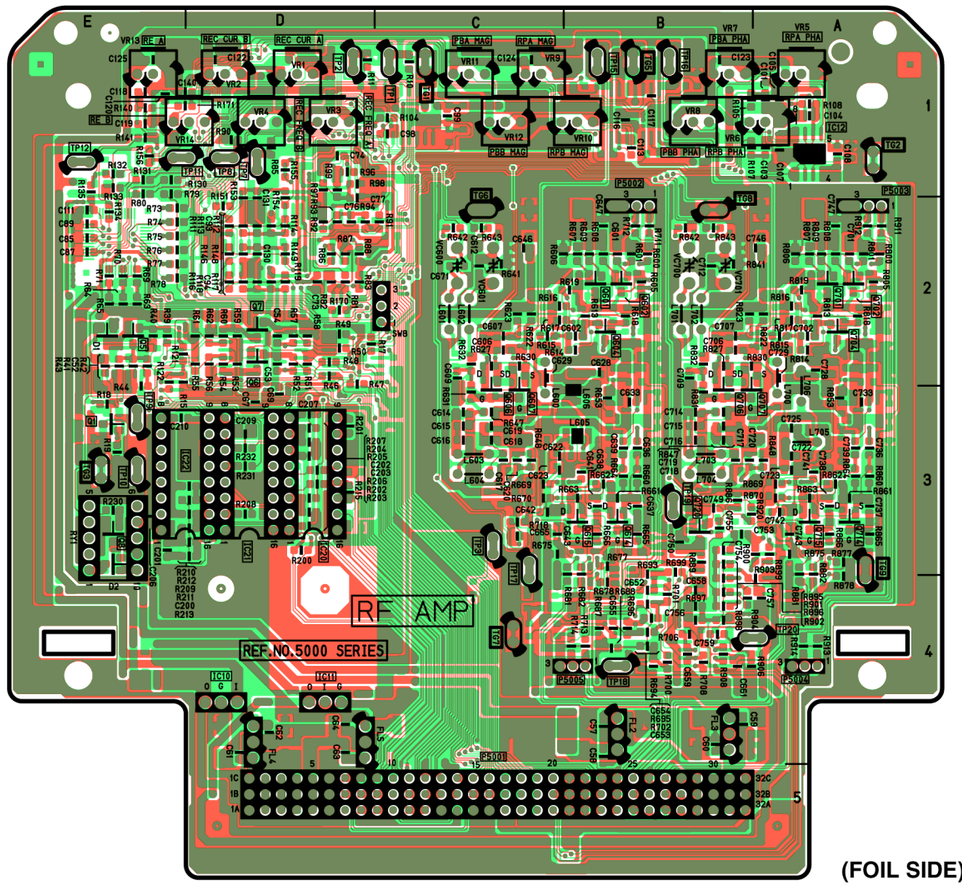

(FOIL SIDE)

CBA-21

HEAD BUFF P.C.BOARD (VEP85151A)

COMPONENT SIDE

REF	LOC
IC14	C1
IC23	D1
IC24	D2
P5001	E2
P5002	A1
P5003	A1
Q300	B1
Q301	B1
Q302	B1
Q303	B1
Q350	B1
Q351	B1
Q352	B1
Q353	B1
Q405	B2
Q406	B2
Q407	C2
Q408	C2
Q409	C2
Q505	B2
Q506	B2
Q507	C2
Q508	C2
Q509	C2
Q601	A2
Q701	A2
TG1	A1
TG2	C1
TP1	C1
TP2	C2

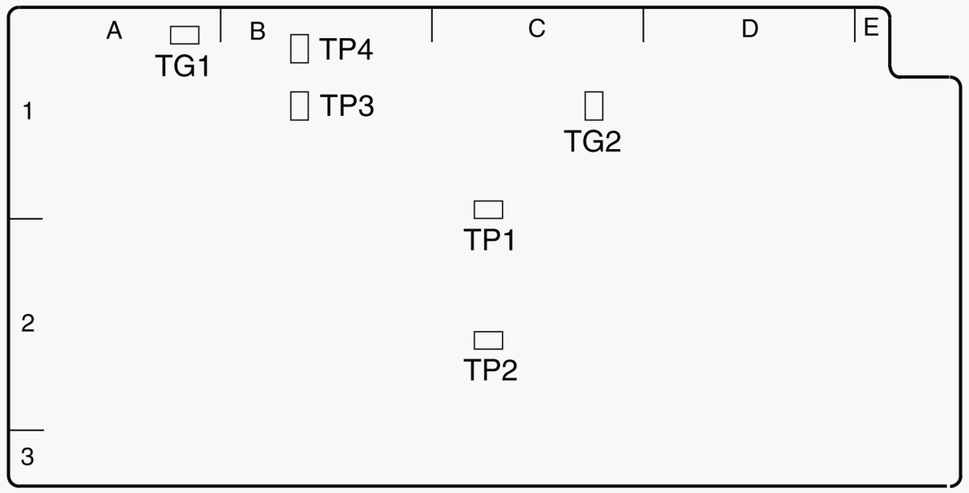

FOIL SIDE

REF	LOC	REF	LOC
TG1	A1	IC27	C1
IC50	A2	IC28	C1
IC90	A2	Q412	C2
Q600	A2	Q413	C2
Q700	A2	Q411	C2
TP3	B1	Q410	C2
TP4	B1	IC34	C2
IC25	B1	TP2	C2
IC26	B1	Q512	C2
IC30	B1	Q513	C2
Q401	B2	Q510	C2
Q402	B2	Q511	C2
Q403	B2	IC35	D1
Q404	B2	IC45	D1
Q501	B2	IC23	D1
Q502	B2	IC3	D1
Q504	B2	Q200	D1
IC31	B2	IC24	D2
IC32	B2	IC10	D2
IC33	B2	Q201	E1
IC40	B2	IC11	E2
IC41	B2	P5001	E2
IC42	B2		
IC43	B2		
Q400	B2		
Q500	B2		
IC9	C1		
IC8	C1		
TP1	C1		
TG2	C1		

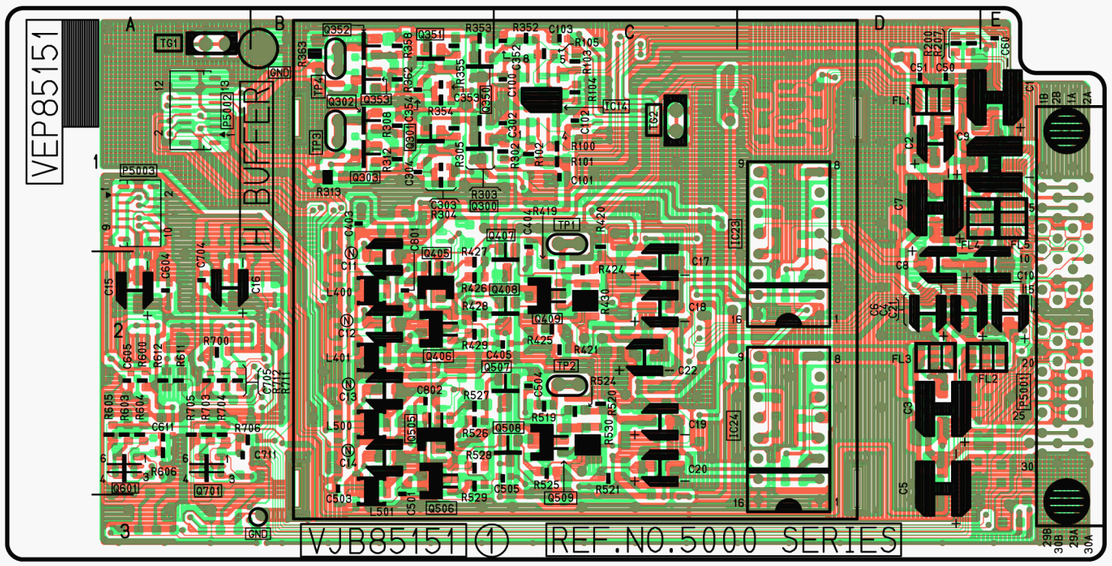

(COMPONENT SIDE)

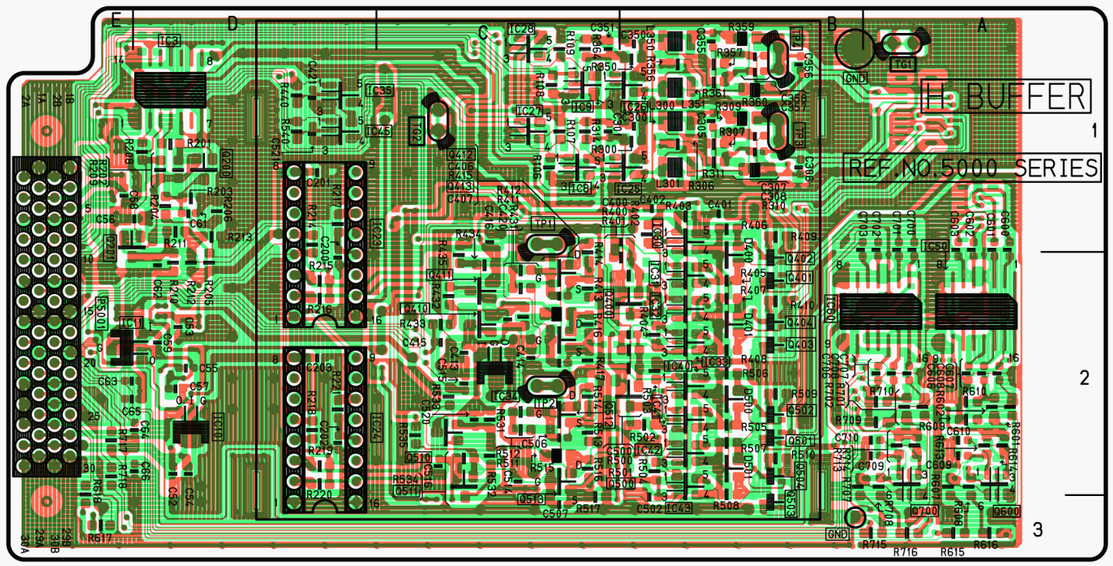

(FOIL SIDE)

CBA-23

CBA-23

FRONT CPU P.C.BOARD (VEP86263B)

COMPONENT SIDE

REF	LOC	REF	LOC
IC1	D2	IC33	G2
IC2	B2	IC34	G3
IC3	D1	IC35	G3
IC4	E2	IC36	G3
IC5	F1	IC37	H3
IC6	F1	IC38	E3
IC13	F1	IC39	F3
IC14	A1	IC40	F3
IC15	B2	IC41	G3
IC16	C1	P1	I1
IC17	H1	P2	J1
IC18	B1	P3	H2
IC23	A3	P4	J2
IC24	B3	P5	K1
IC25	B2	P6	E1
IC27	G2	P7	C2
IC28	B2	P8	A3
IC29	A2	SW1	C1
IC30	G2	TG1	D2
IC31	F2	TP1	E1
IC32	H2	TP2	E1

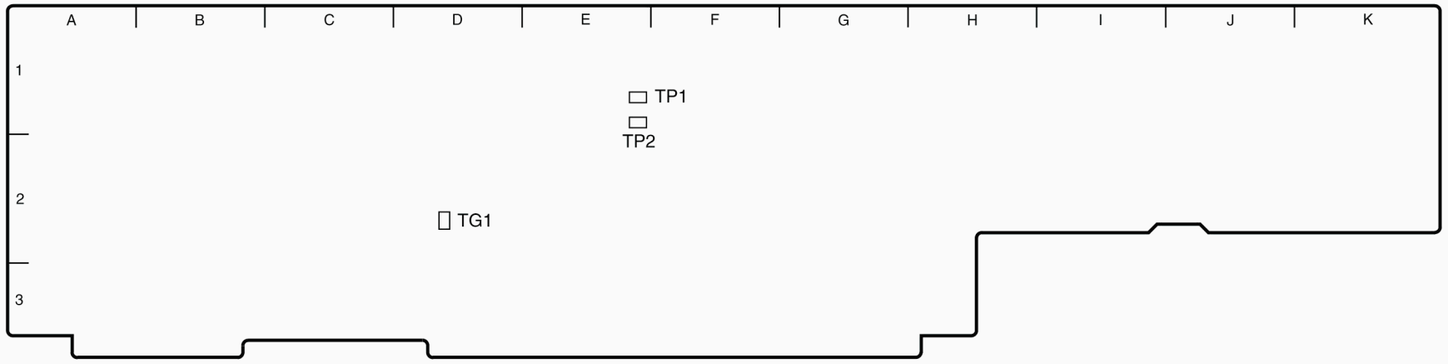

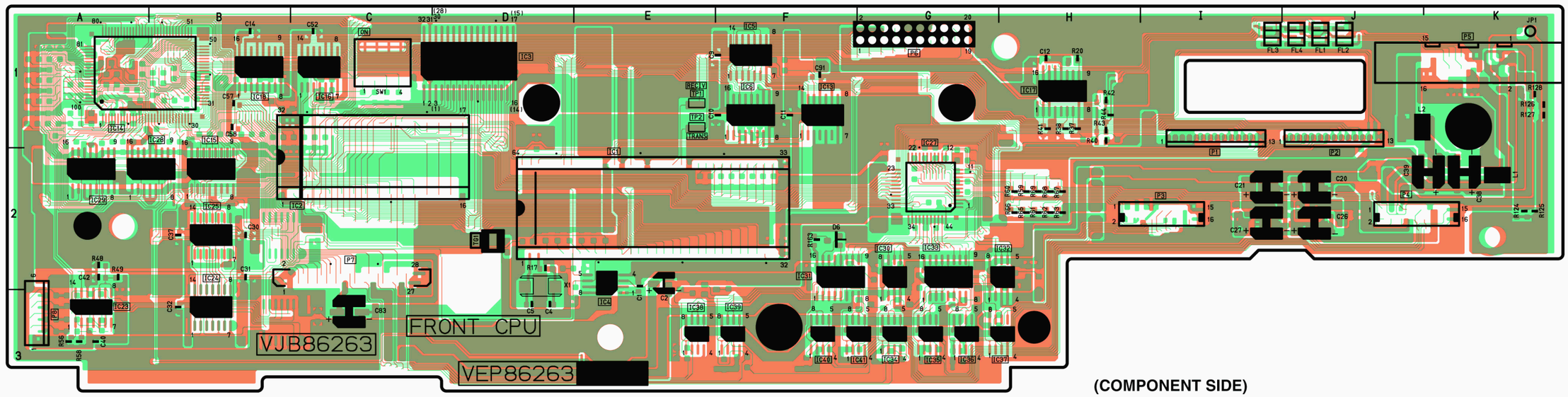

(COMPONENT SIDE)

CBA-26

FRONT CPU P.C.BOARD (VEP86263B)

FOIL SIDE

REF	LOC
IC20	J2
IC21	I2
IC22	B3
IC26	B2
IC42	B3
IC43	B2

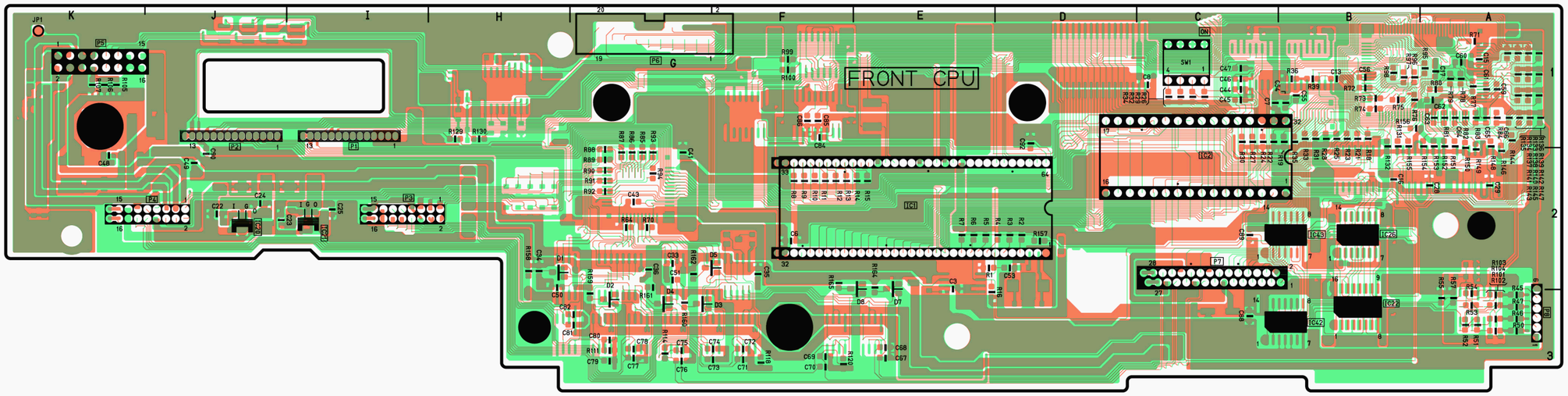

(FOIL SIOE)

CBA-27

CBA-27

SYSCON P.C.BOARD (NTSC:VEP86267A,PAL:VEP86267B)

COMPONENT SIDE

REF	LOC	REF	LOC	REF	LOC	REF	LOC	REF	LOC
IC1	C2	IC524	E1	Q13	C4	QR32	B4	TP701	J4
IC2	A3	IC525	G1	Q14	B4	QR39	A4	TP702	J4
IC6	C3	IC527	F3	Q15	B4	QR40	A4	VC1	D3
IC8	D1	IC701	H3	Q16	B4	SW501	G1	VR1	D1
IC9	C1	IC702	H2	Q17	B4	TG1	D1	VR2	D1
IC13	D2	IC703	I1	Q18	B4	TG2	F1	VR701	J4
IC15	E3	IC704	H2	Q19	B4	TG701	H3		
IC17	A2	IC710	I3	Q20	B4	TP1	B2		
IC23	E4	IC714	G4	Q21	B4	TP2	E4		
IC24	D2	IC716	F4	Q23	D4	TP3	E5		
IC26	B1	IC717	G4	Q24	C4	TP4	F4		
IC27	A5	IC719	J4	Q27	D4	TP5	B2		
IC28	A3	IC720	J4	Q28	C4	TP6	B2		
IC29	B1	IC721	I3	Q30	A4	TP7	B2		
IC35	C1	IC722	I4	Q31	A4	TP8	C1		
IC500	E2	IC725	H4	Q32	A4	TP9	D1		
IC503	E3	IC726	H4	Q33	A4	TP10	B1		
IC504	E2	IC731	H2	Q34	A4	TP11	B2		
IC505	E1	IC733	H4	Q35	A4	TP12	B2		
IC509	G2	P1	G5	Q36	A4	TP13	D1		
IC510	G3	P2	D5	Q37	A4	TP14	C1		
IC511	F3	P701	I1	Q39	D4	TP500	F2		
IC512	F4	Q4	E3	Q703	H3	TP501	F2		
IC513	G3	Q6	C4	QR13	C1	TP502	G2		
IC514	G3	Q7	C4	QR14	C1	TP503	G2		
IC515	G4	Q8	B4	QR15	C1	TP504	F2		
IC516	G4	Q9	C4	QR16	B1	TP505	F1		
IC517	F1	Q10	C4	QR27	C4	TP506	F1		
IC518	H1	Q11	C4	QR28	C4	TP507	G1		
IC523	F1	Q12	B4	QR31	B4	TP508	F1		

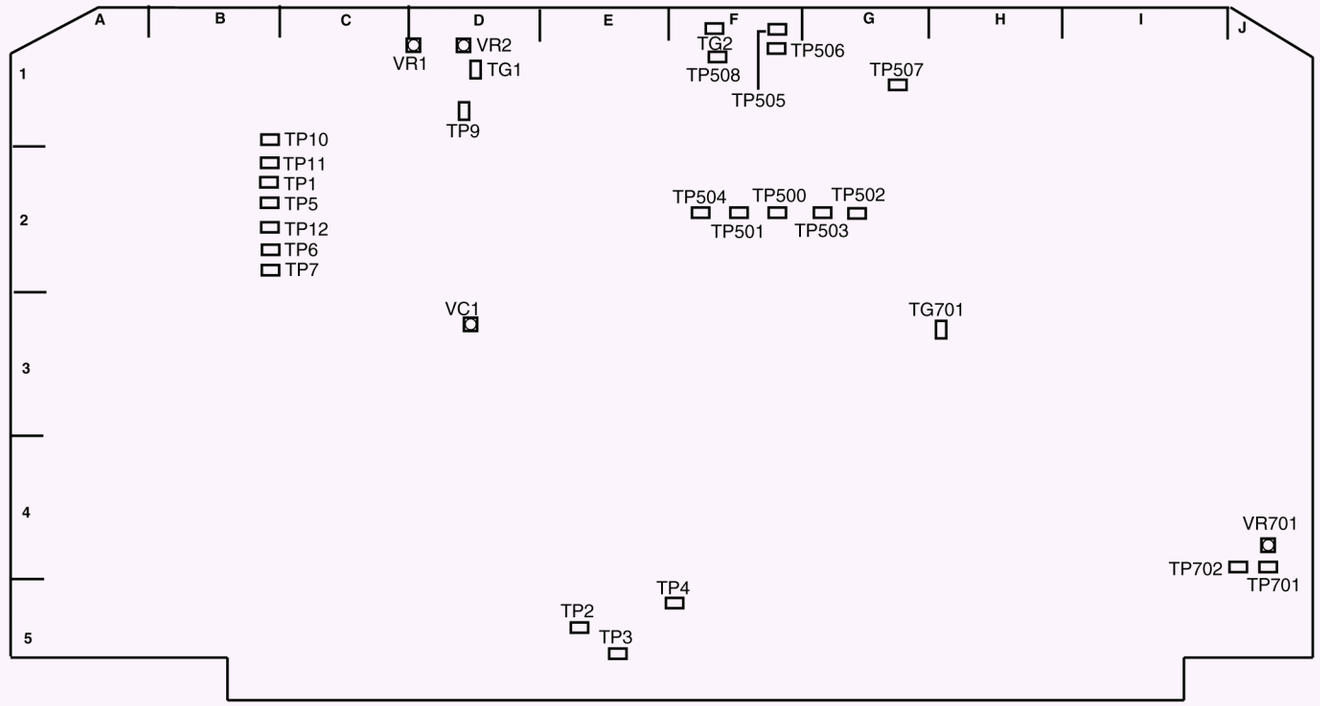

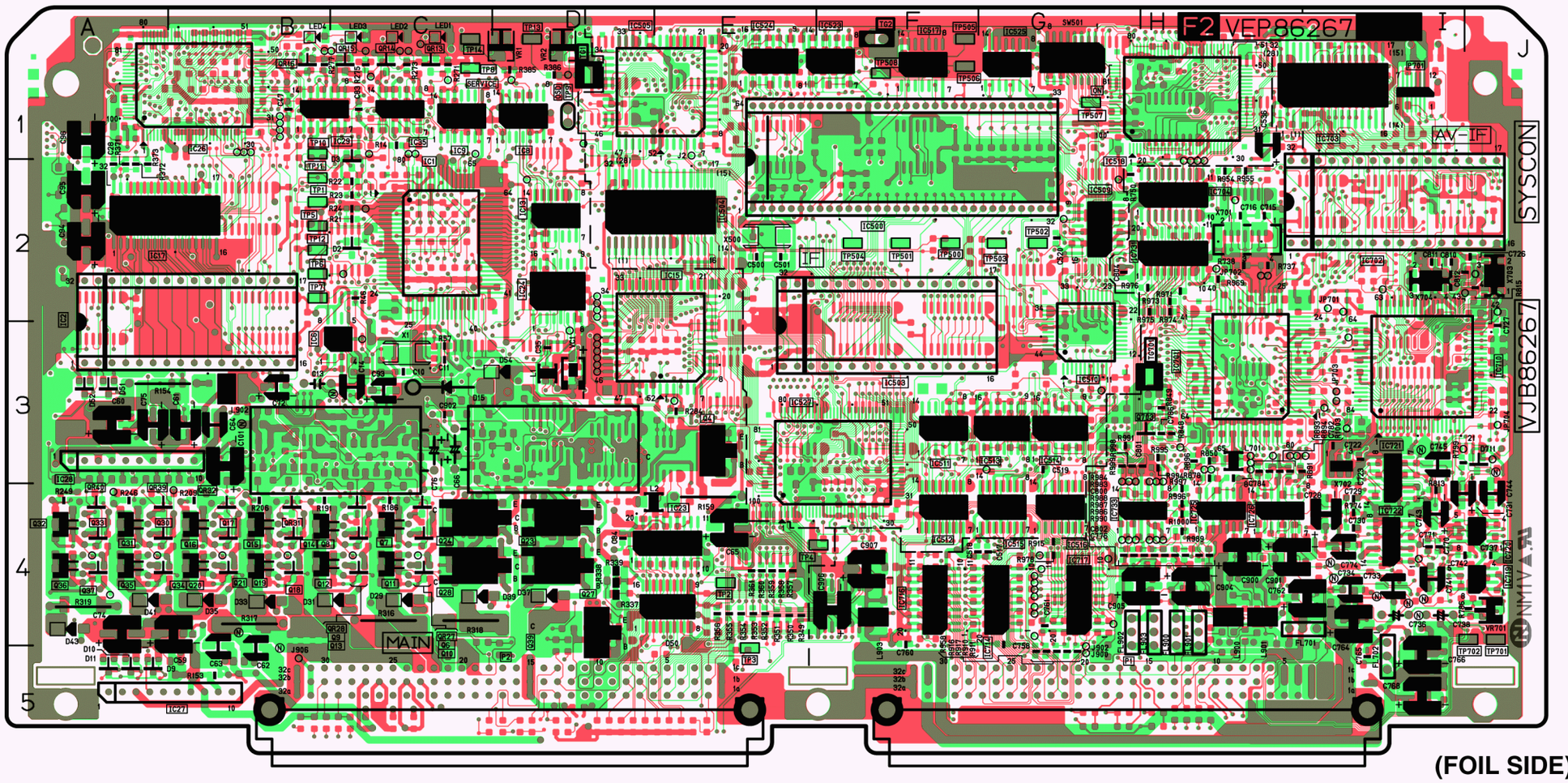

(FOIL SIDE)

CBA-4

CBA-4

SYSCON P.C.BOARD (NTSC:VEP86267A,PAL:VEP86267B)

FOIL SIDE

REF	LOC	REF	LOC	REF	LOC	REF	LOC
IC3	B2	IC529	E2	Q702	H2	QR38	A2
IC4	B1	IC530	E2	Q704	I3	QR41	B2
IC5	A1	IC531	E1	Q705	I3	QR42	C3
IC7	E4	IC532	F2	QR3	B5	QR43	C2
IC10	C2	IC705	H1	QR4	A1	QR44	C3
IC11	D2	IC706	H2	QR5	A5	QR701	H3
IC12	D1	IC707	H2	QR6	A5	QR702	H2
IC14	D1	IC708	I1	QR7	A5	QR703	H2
IC16	D1	IC709	I1	QR8	A1	QR704	H2
IC19	E4	IC711	I2	QR9	B2	QR705	H2
IC20	E3	IC712	I2	QR10	B2		
IC30	E3	IC713	H1	QR11	E3		
IC31	D3	IC715	G3	QR12	B1		
IC32	C2	IC718	I3	QR17	C2		
IC33	C1	IC723	I5	QR18	B3		
IC34	A2	IC724	I5	QR19	C3		
IC36	D4	IC728	F1	QR20	B3		
IC37	B1	IC729	I1	QR21	B3		
IC38	D3	IC730	G2	QR22	C2		
IC39	B2	IC732	G1	QR23	C3		
IC501	F2	IC734	G2	QR24	C3		
IC502	F2	IC735	I2	QR25	A3		
IC506	E1	Q3	E3	QR26	A3		
IC507	E1	Q5	E3	QR29	C3		
IC508	D1	Q22	D3	QR30	B3		
IC519	I1	Q25	C3	QR33	C3		
IC520	H1	Q26	D3	QR34	A3		
IC521	H1	Q29	C3	QR35	D3		
IC522	G1	Q38	C3	QR36	C3		
IC528	E2	Q701	H4	QR37	A2		

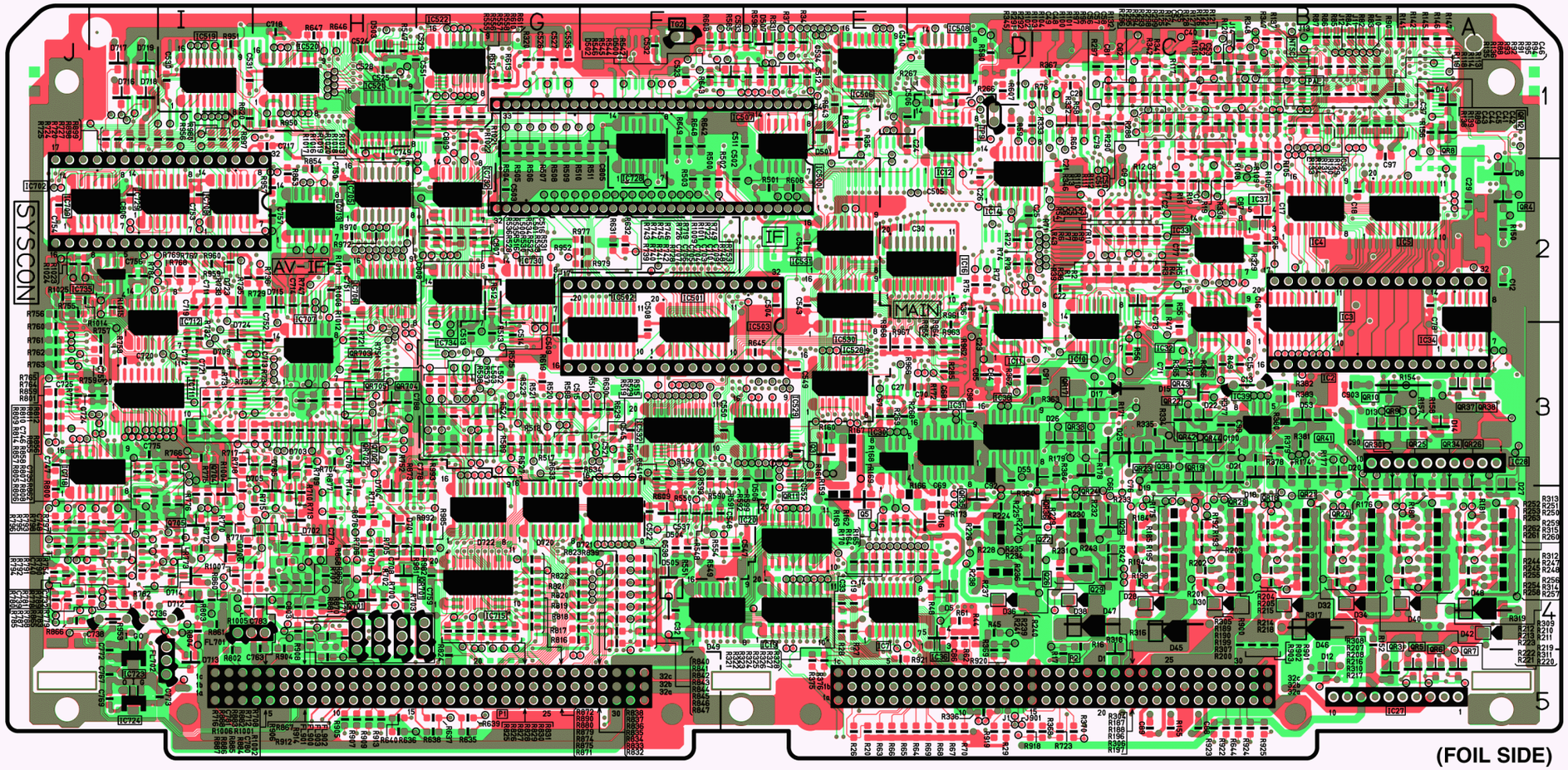

(FOIL SIDE)

CBA-5

CBA-5

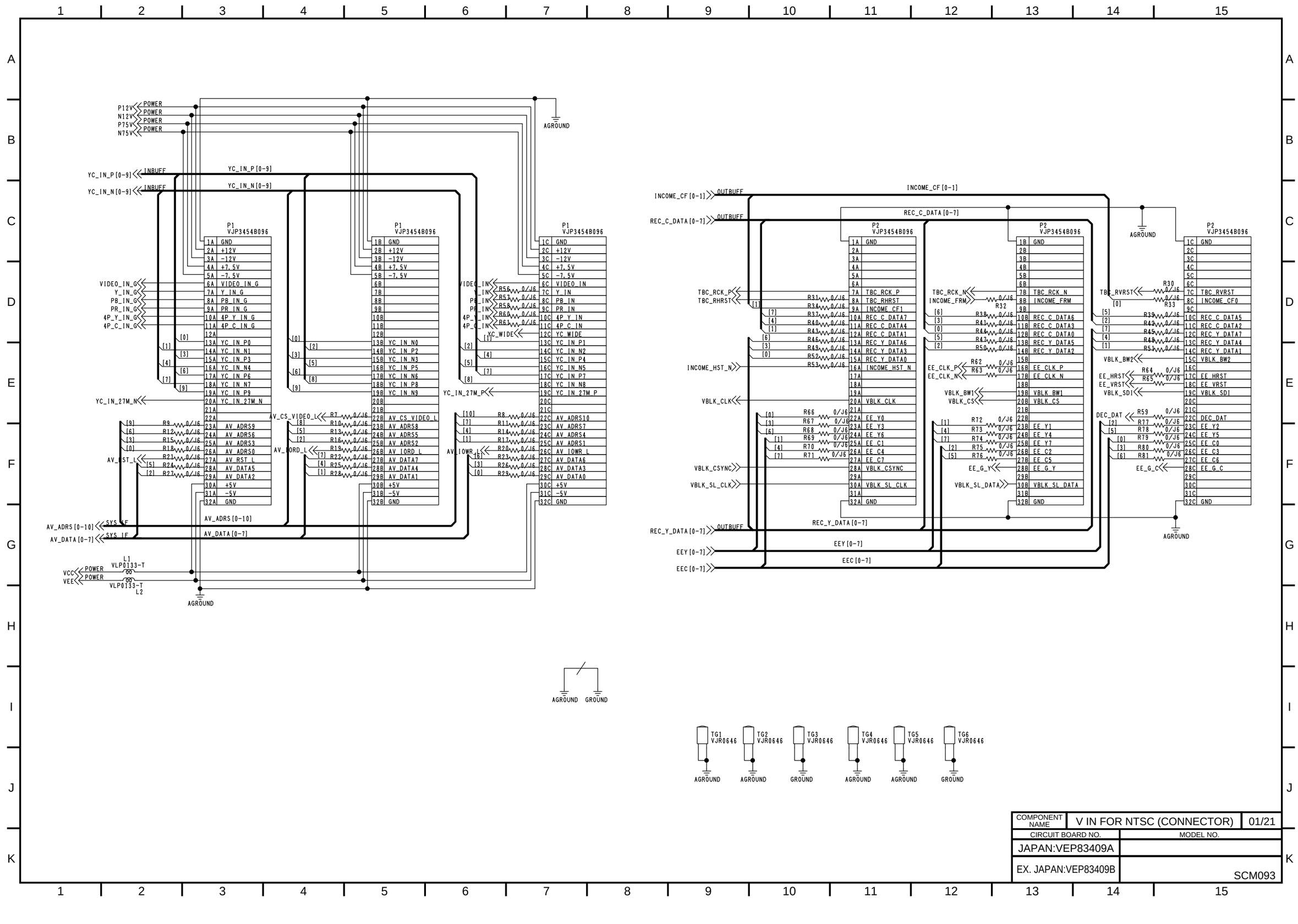

COMPONENT NAME	V IN FOR NTSC (CONNECTOR)	01/21
CIRCUIT BOARD NO.	MODEL NO.	
JAPAN:VEP83409A		
EX. JAPAN:VEP83409B		SCM093

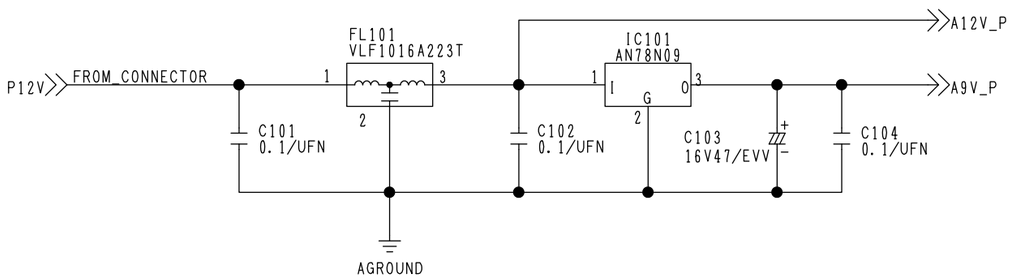

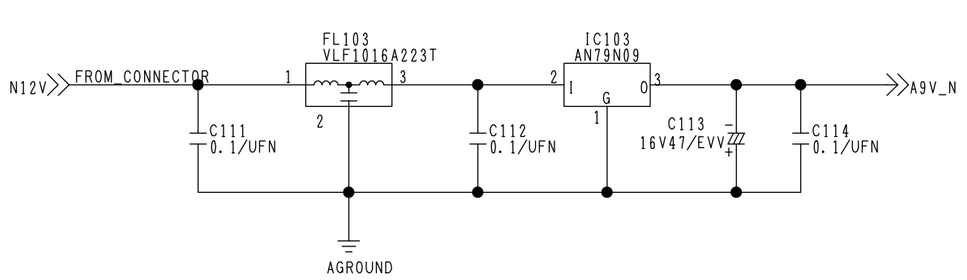

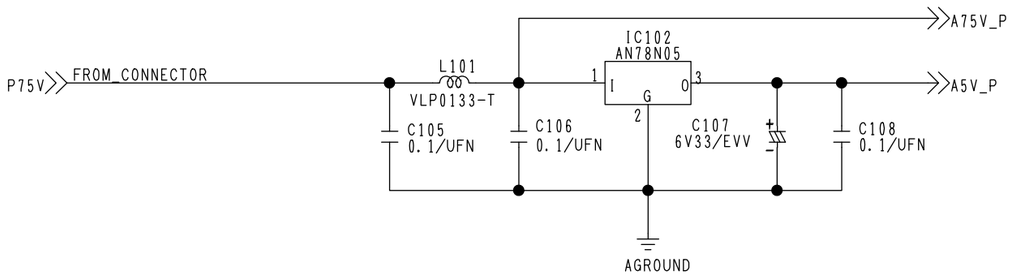

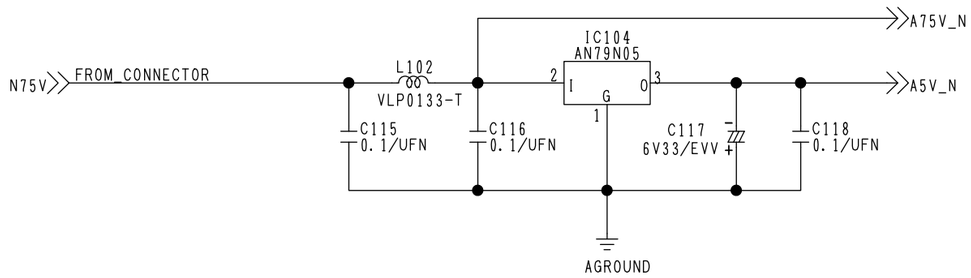

COMPONENT NAME	V IN FOR NTSC (POWER)	02/21
CIRCUIT BOARD NO.	MODEL NO.	
JAPAN:VEP83409A		
EX. JAPAN:VEP83409B		SCM094

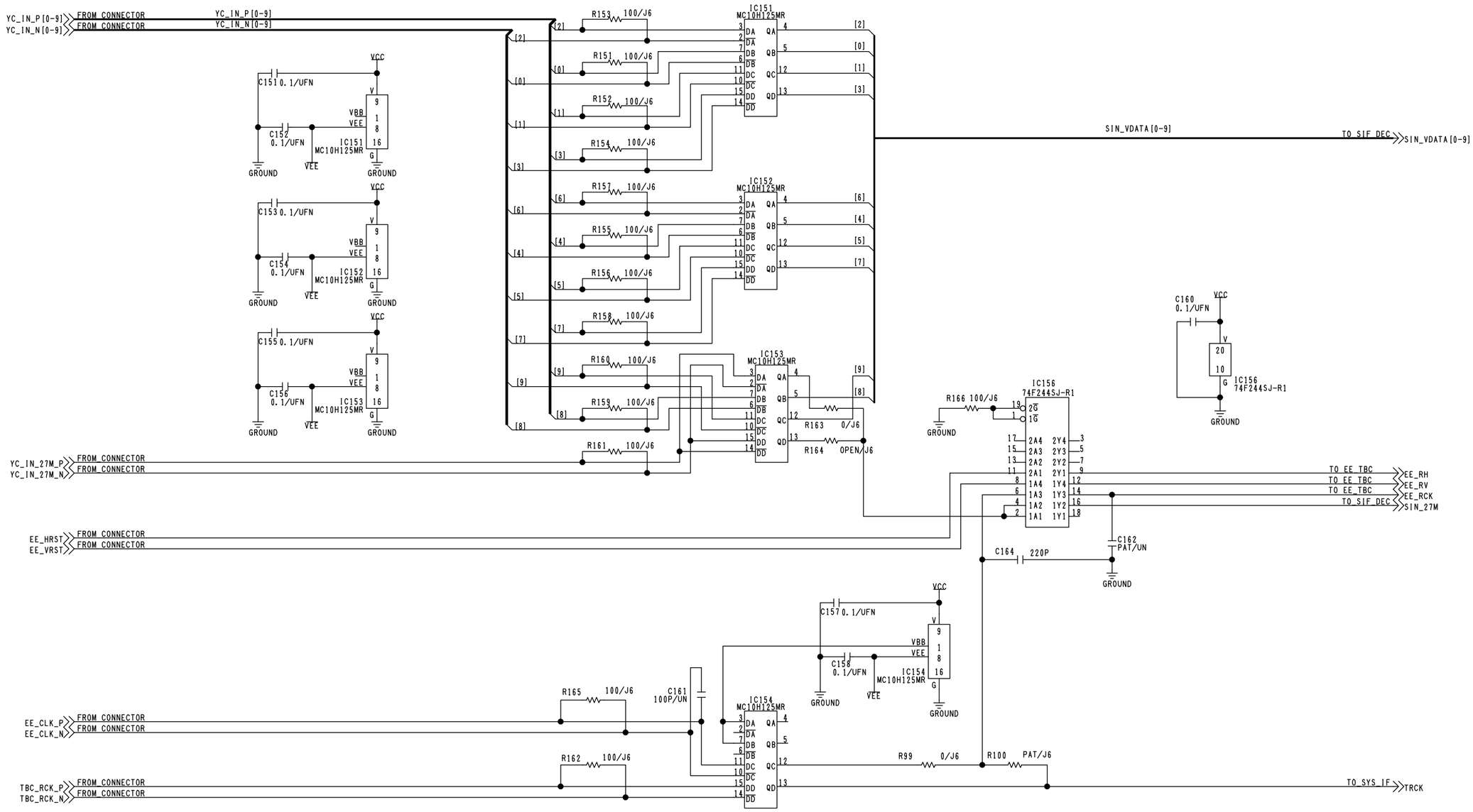

COMPONENT NAME	V IN FOR NTSC (IN BUFF)	03/21
CIRCUIT BOARD NO.	MODEL NO.	
JAPAN:VEP83409A		
EX. JAPAN:VEP83409B		SCM095

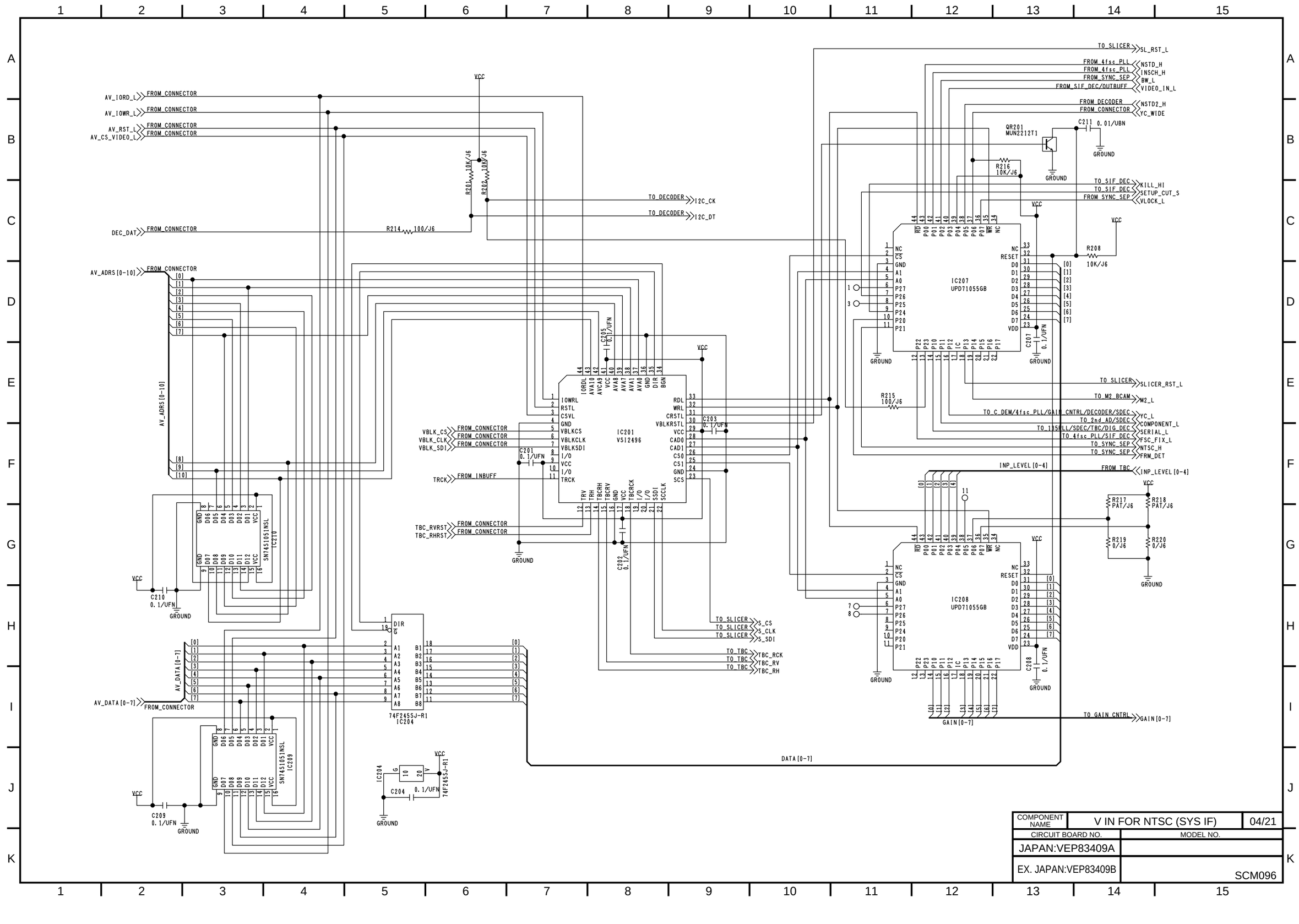

COMPONENT NAME	V IN FOR NTSC (SYS IF)	04/21
CIRCUIT BOARD NO.		MODEL NO.
JAPAN:VEP83409A		
EX. JAPAN:VEP83409B		SCM096

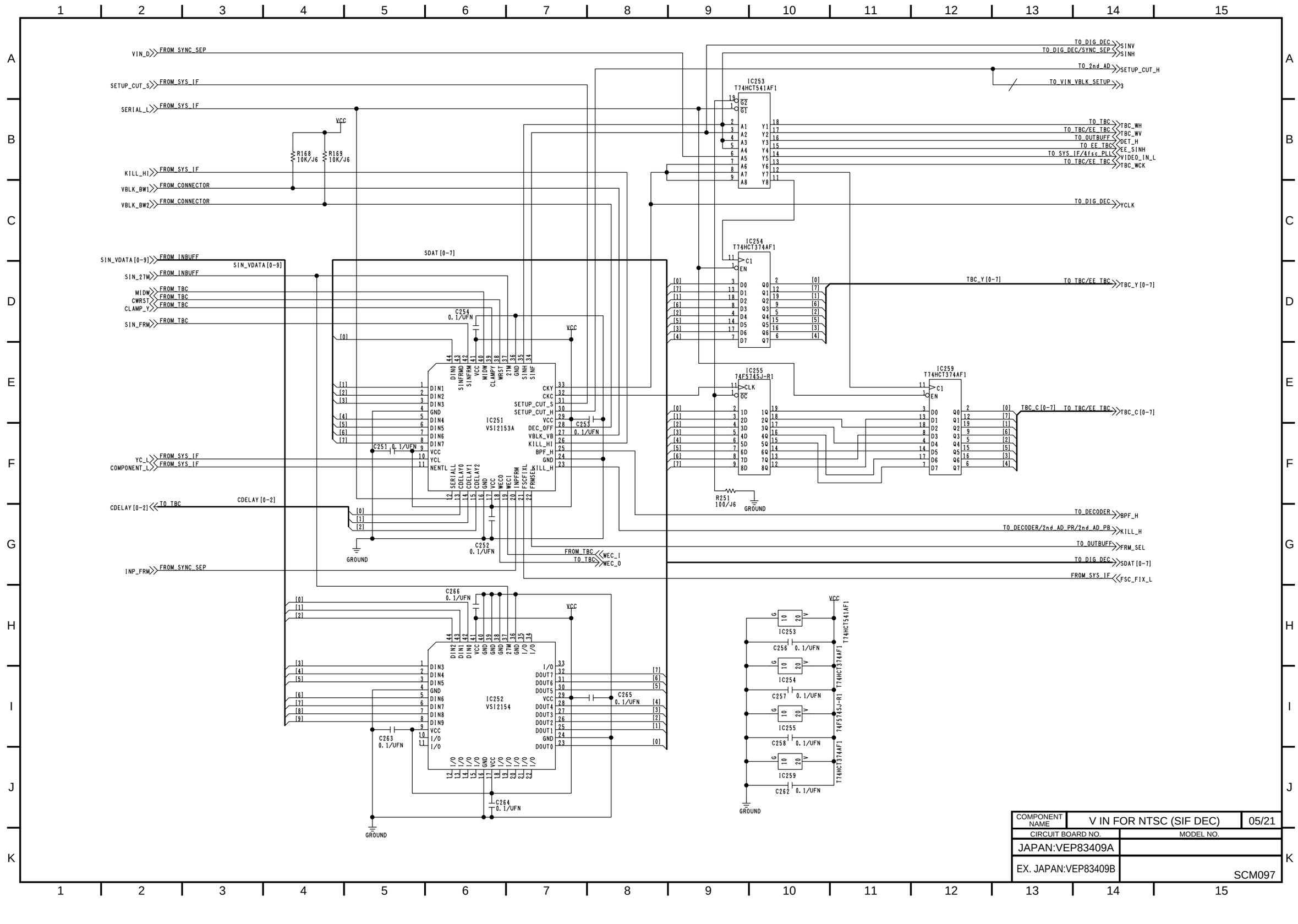
VIN_D FROM SYNC SEP
SETUP_CUT_S FROM SYS IF
SERIAL_L FROM SYS IF
KILL_HI FROM SYS IF
VBLK_BW1 FROM CONNECTOR
VBLK_BW2 FROM CONNECTOR
VCC
R168 10K/J6
R169 10K/J6
SIN_VDATA [0-9] FROM INBUFF
SIN_VDATA [0-9]
SIN_27M FROM INBUFF
MIDW FROM TBC
CWRST FROM TBC
CLAMP_Y FROM TBC
SIN_FRM FROM TBC
SDAT [0-7]
C254 0.1/UFN
C251 0.1/UFN
C252 0.1/UFN
C253 0.1/UFN
C263 0.1/UFN
C264 0.1/UFN
C265 0.1/UFN
C266 0.1/UFN
IC251 VSI2153A
IC252 VSI2154
YC_L FROM SYS IF
COMPONENT_L FROM SYS IF
CDELAY [0-2] TO TBC
CDELAY [0-2]
INP_FRM FROM SYNC SEP
FROM TBC WEC_I
TO TBC WEC_O
GROUND
IC253 T74HCT541AF1
IC254 T74HCT374AF1
IC255 74F574SJ-R1
IC259 T74HCT374AF1
R251 100/J6
TO DIG DEC SINV
TO DIG DEC/SYNC SEP SINH
TO 2nd AD SETUP_CUT_H
TO VIN VBLK SETUP 3
TO TBC TBC_WH
TO TBC/EE TBC TBC_WV
TO OUTBUFF DET_H
TO EE TBC EE_SINH
TO SYS IF/4fsc PLL VIDEO_IN_L
TO TBC/EE TBC TBC_WCK
TO DIG DEC YCLK
TBC_Y [0-7] TO TBC/EE TBC TBC_Y [0-7]
TBC_C [0-7] TO TBC/EE TBC TBC_C [0-7]
TO DECODER BPF_H
TO DECODER/2nd AD PR/2nd AD PB KILL_H
TO OUTBUFF FRM_SEL
TO DIG DEC SDAT [0-7]
FROM SYS IF FSC_FIX_L
IC253 T74HCT541AF1
IC254 T74HCT374AF1
IC255 74F574SJ-R1
IC259 T74HCT374AF1
C256 0.1/UFN
C257 0.1/UFN
C258 0.1/UFN
C262 0.1/UFN
GROUND
COMPONENT NAME
V IN FOR NTSC (SIF DEC)
05/21
CIRCUIT BOARD NO.
MODEL NO.
JAPAN:VEP83409A
EX. JAPAN:VEP83409B
SCM097

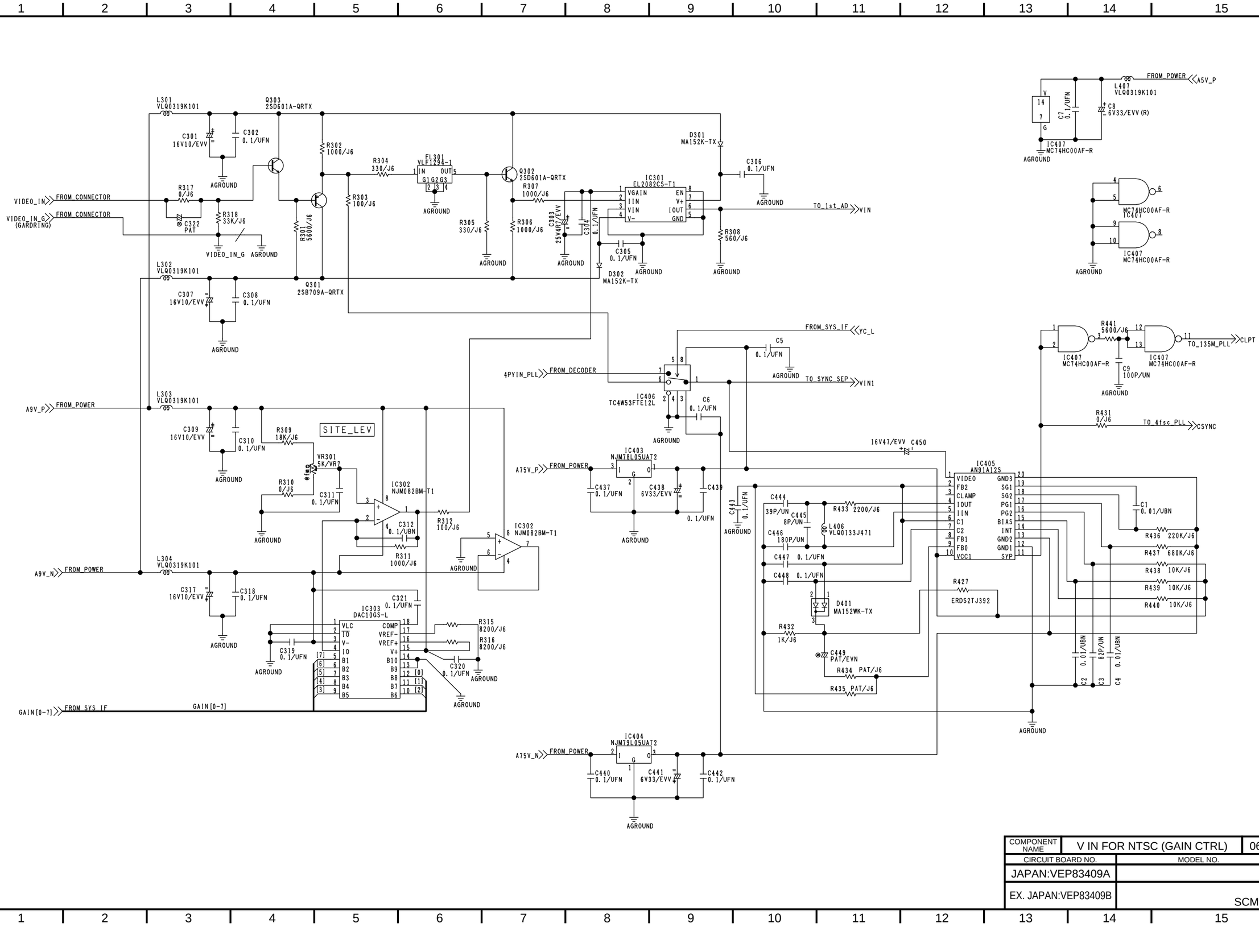

COMPONENT NAME	V IN FOR NTSC (GAIN CTRL)	06/21
CIRCUIT BOARD NO.	MODEL NO.	
JAPAN:VEP83409A		
EX. JAPAN:VEP83409B		SCM098

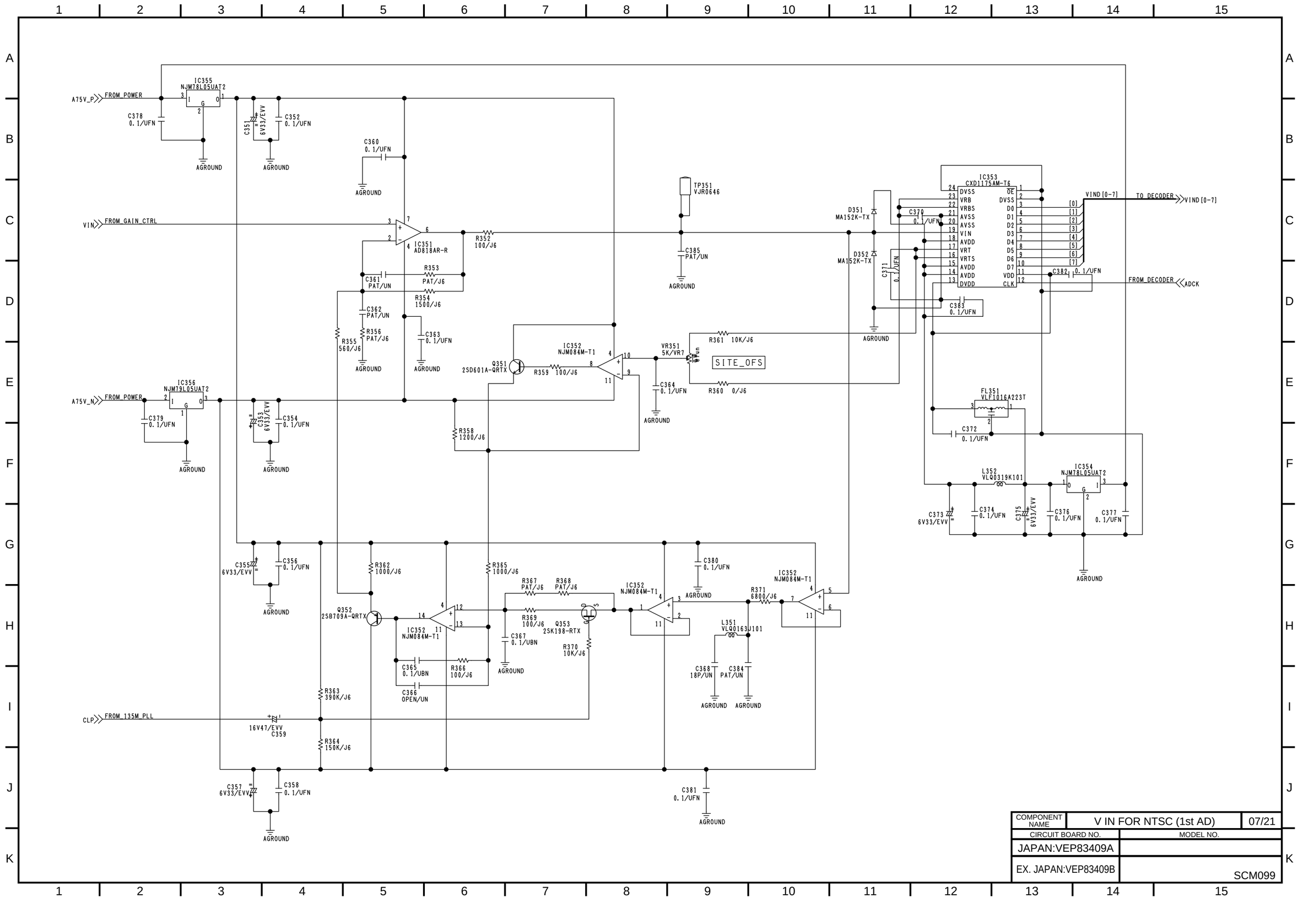

COMPONENT NAME	V IN FOR NTSC (1st AD)
	07/21
CIRCUIT BOARD NO.	MODEL NO.
JAPAN:VEP83409A	
EX. JAPAN:VEP83409B	
	SCM099

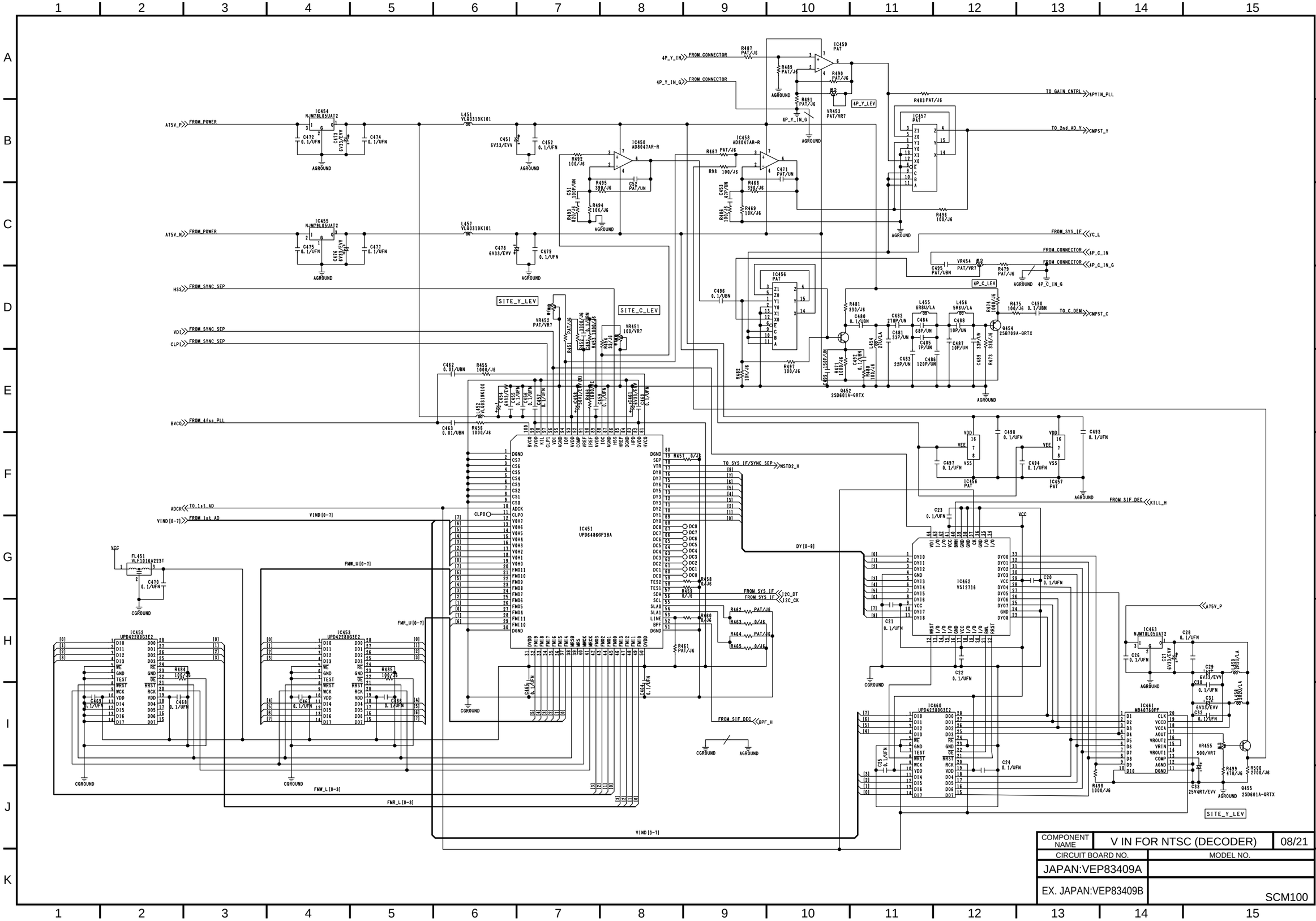

COMPONENT NAME	V IN FOR NTSC (DECODER)	08/21
CIRCUIT BOARD NO.	MODEL NO.	
JAPAN:VEP83409A		
EX. JAPAN:VEP83409B		SCM100

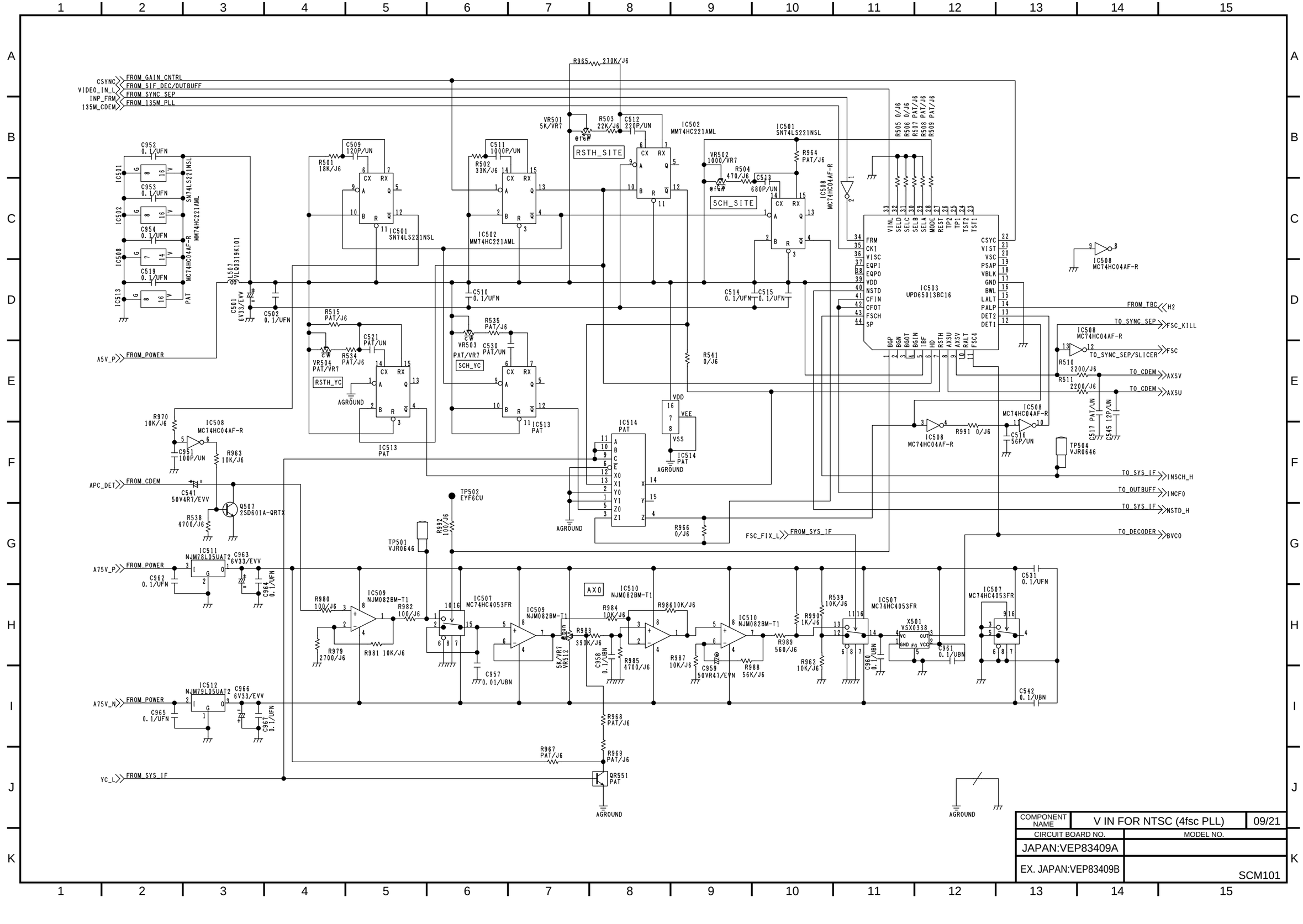

COMPONENT NAME	V IN FOR NTSC (4fsc PLL)	09/21
CIRCUIT BOARD NO.	MODEL NO.	
JAPAN:VEP83409A		
EX. JAPAN:VEP83409B		SCM101

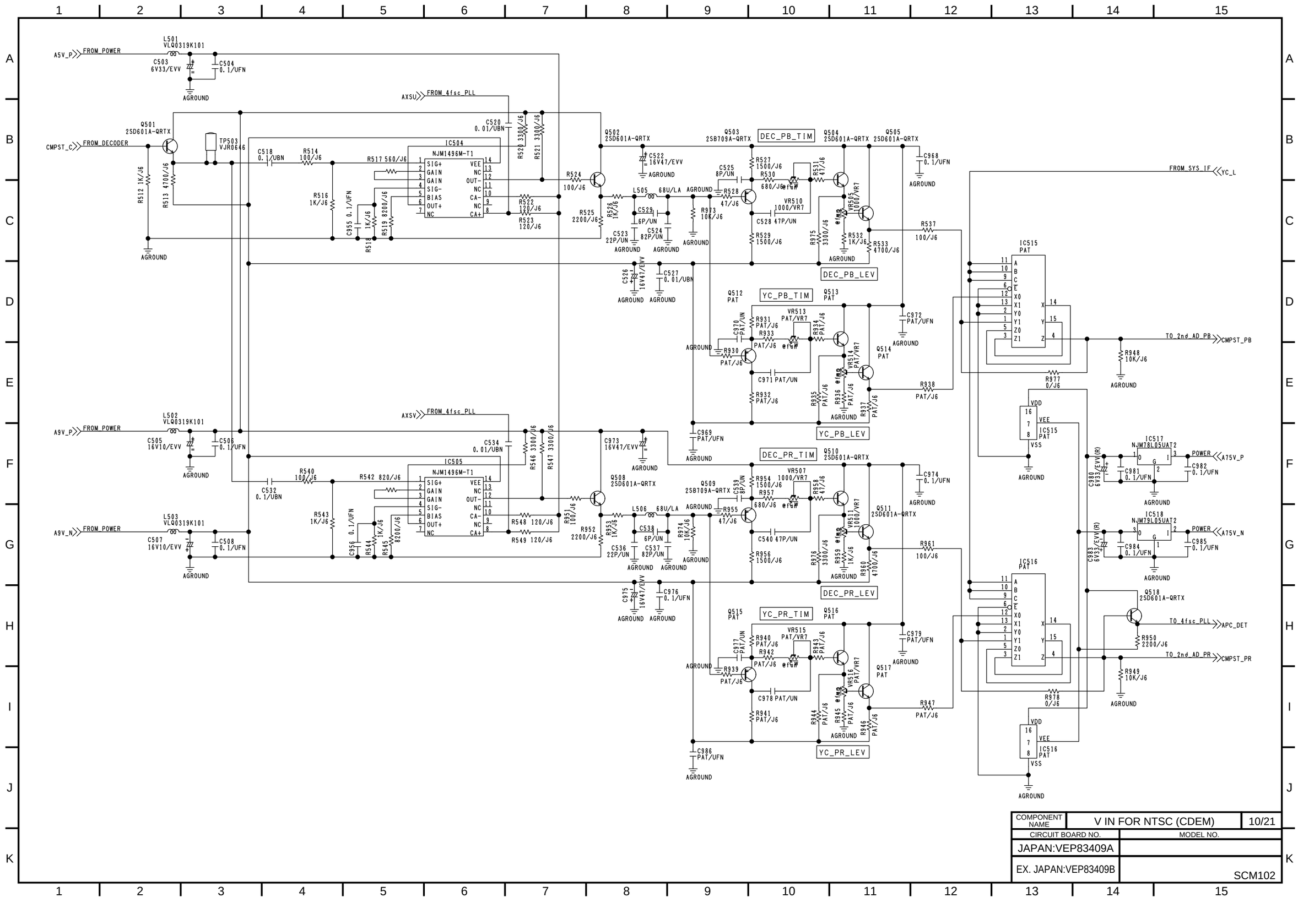

COMPONENT NAME	V IN FOR NTSC (CDEM)	10/21
CIRCUIT BOARD NO.	MODEL NO.	
JAPAN:VEP83409A		
EX. JAPAN:VEP83409B	SCM102	

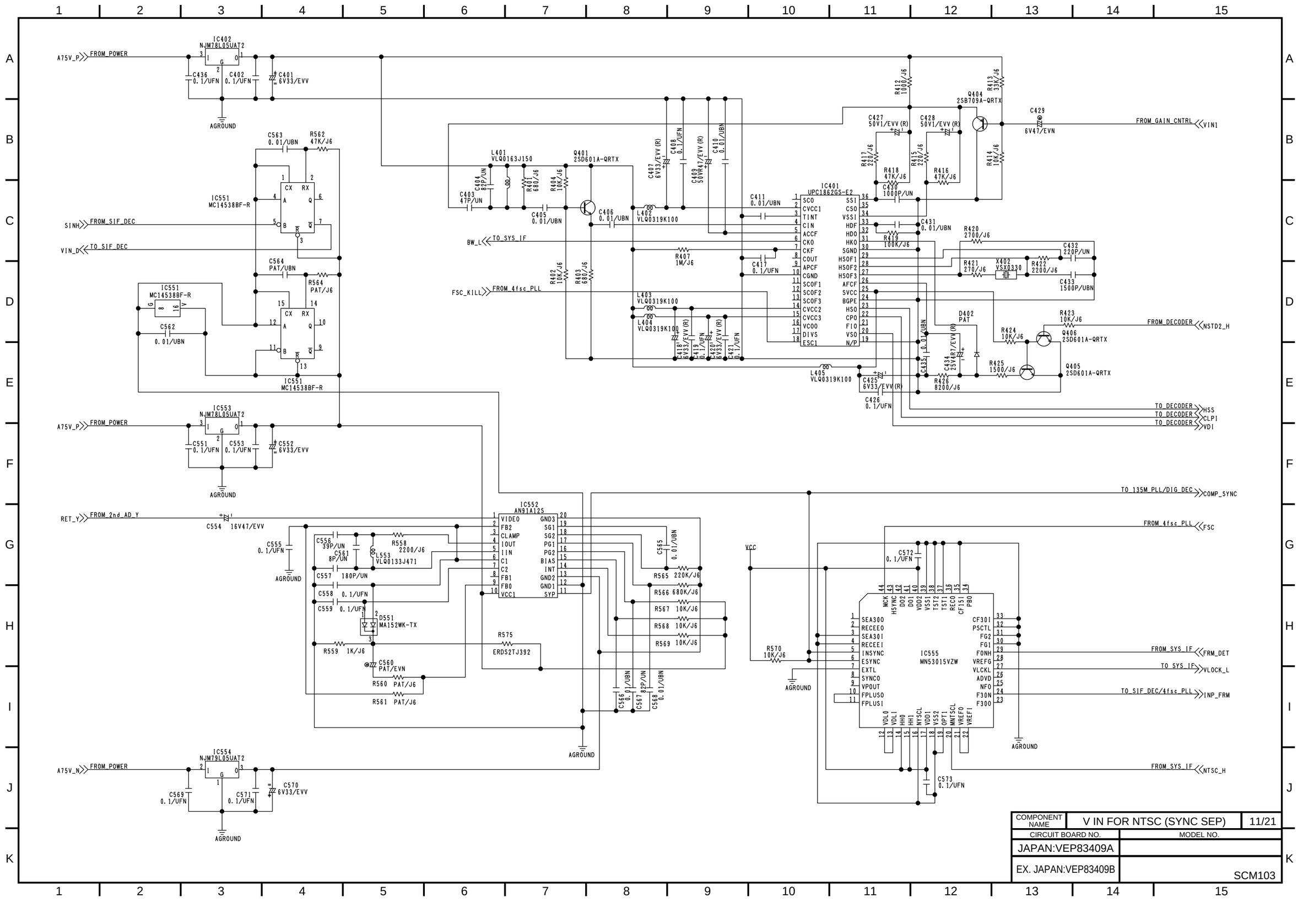
IC402
NJM78L05UAT2
A75V_P
FROM_POWER
AGROUND
C436 0.1/UFN
C402 0.1/UFN
C401 6V33/EVV
IC551
MC14538BF-R
C563 0.01/UBN
R562 47K/J6
SINH
FROM_SIF_DEC
VIN_D
TO_SIF_DEC
C564 PAT/UBN
R564 PAT/J6
C562 0.01/UBN
IC553
NJM78L05UAT2
C551 0.1/UFN
C553 0.1/UFN
C552 6V33/EVV
RET_Y
FROM_2nd_AD_Y
C554 16V47/EVV
C555 0.1/UFN
C556 39P/UN
C561 8P/UN
L553 VLQ0133J471
R558 2200/J6
C557 180P/UN
C558 0.1/UFN
C559 0.1/UFN
D551 MA152WK-TX
R559 1K/J6
C560 PAT/EVN
R560 PAT/J6
R561 PAT/J6
IC552
AN91A12S
VIDEO
FB2
CLAMP
IOUT
IIN
C1
C2
FB1
FB0
VCC1
GND3
SG1
SG2
PG1
PG2
BIAS
INT
GND2
GND1
SYP
C565 0.01/UBN
R565 220K/J6
R566 680K/J6
R567 10K/J6
R568 10K/J6
R569 10K/J6
R575 ERDS2TJ392
C566 0.01/UBN
C567 82P/UN
C568 0.01/UBN
IC554
NJM79L05UAT2
A75V_N
C569 0.1/UFN
C571 0.1/UFN
C570 6V33/EVV
L401 VLQ0163J150
C404 82P/UN
C403 47P/UN
R401 680/J6
R404 10K/J6
Q401 2SD601A-QRTX
C405 0.01/UBN
C406 0.01/UBN
L402 VLQ0319K100
C407 6V33/EVV(R)
C408 0.1/UFN
C409 50V47/EVV(R)
C410 0.01/UBN
BW_L
TO_SYS_IF
R407 1M/J6
FSC_KILL
FROM_4fsc_PLL
R402 10K/J6
R403 680/J6
L403 VLQ0319K100
L404 VLQ0319K100
C418 6V33/EVV(R)
C419 0.1/UFN
C420 6V33/EVV(R)
C421 0.1/UFN
C411 0.01/UBN
C417 0.1/UFN
IC401
UPC1862GS-E2
SCO
CVCC1
TINT
CIN
ACCF
CKO
CKF
COUT
APCF
CGND
SCOF1
SCOF2
SCOF3
CVCC2
CVCC3
VCOO
DIVS
ESCI
SSI
CSO
VSS1
HDF
HDO
HKO
SGND
HSOF1
HSOF2
HSOF3
AFCF
SVCC
BGPE
HSO
CPO
FIO
VSO
N/P
R412 1000/J6
R413 33K/J6
Q404 2SB709A-QRTX
C429 6V47/EVN
FROM_GAIN_CNTRL
VIN1
C427 50V1/EVV(R)
C428 50V1/EVV(R)
R417 220/J6
R415 220/J6
R414 10K/J6
R418 47K/J6
R416 47K/J6
C430 1000P/UN
C431 0.01/UBN
R419 100K/J6
R420 2700/J6
C432 220P/UN
R421 270/J6
X402 VSX0330
R422 2200/J6
C433 1500P/UBN
D402 PAT
C434 25V4R7/EVV(R)
C435 0.1/UBN
R423 10K/J6
FROM_DECODER
NSTD2_H
R424 10K/J6
Q406 2SD601A-QRTX
R425 1500/J6
Q405 2SD601A-QRTX
R426 8200/J6
L405 VLQ0319K100
C425 6V33/EVV(R)
C426 0.1/UFN
TO_DECODER
HSS
TO_DECODER
CLPI
TO_DECODER
VDI
TO_135M_PLL/DIG_DEC
COMP_SYNC
FROM_4fsc_PLL
FSC
VCC
C572 0.1/UFN
IC555
MN53015VZW
SEA30O
RECEEO
SEA30I
RECEEI
INSYNC
ESYNC
EXTL
SYNCO
VPOUT
FPLUSO
FPLUSI
MCK
HSYNC
DO2
DO1
VDD2
VSS1
TST2
TST1
RECO
CF15I
PBO
CF30I
PSCTL
FG2
FG1
FONH
VREFG
VLCKL
ADVD
NFO
F30N
F30O
VDL0
VDL1
HH0
HH1
NYSCL
VDD1
VSS2
OPT1
MNTSCL
VREFO
VREFI
R570 10K/J6
FROM_SYS_IF
FRM_DET
TO_SYS_IF
VLOCK_L
TO_SIF_DEC/4fsc_PLL
INP_FRM
FROM_SYS_IF
NTSC_H
C573 0.1/UFN
COMPONENT NAME
V IN FOR NTSC (SYNC SEP)
11/21
CIRCUIT BOARD NO.
MODEL NO.
JAPAN:VEP83409A
EX. JAPAN:VEP83409B
SCM103

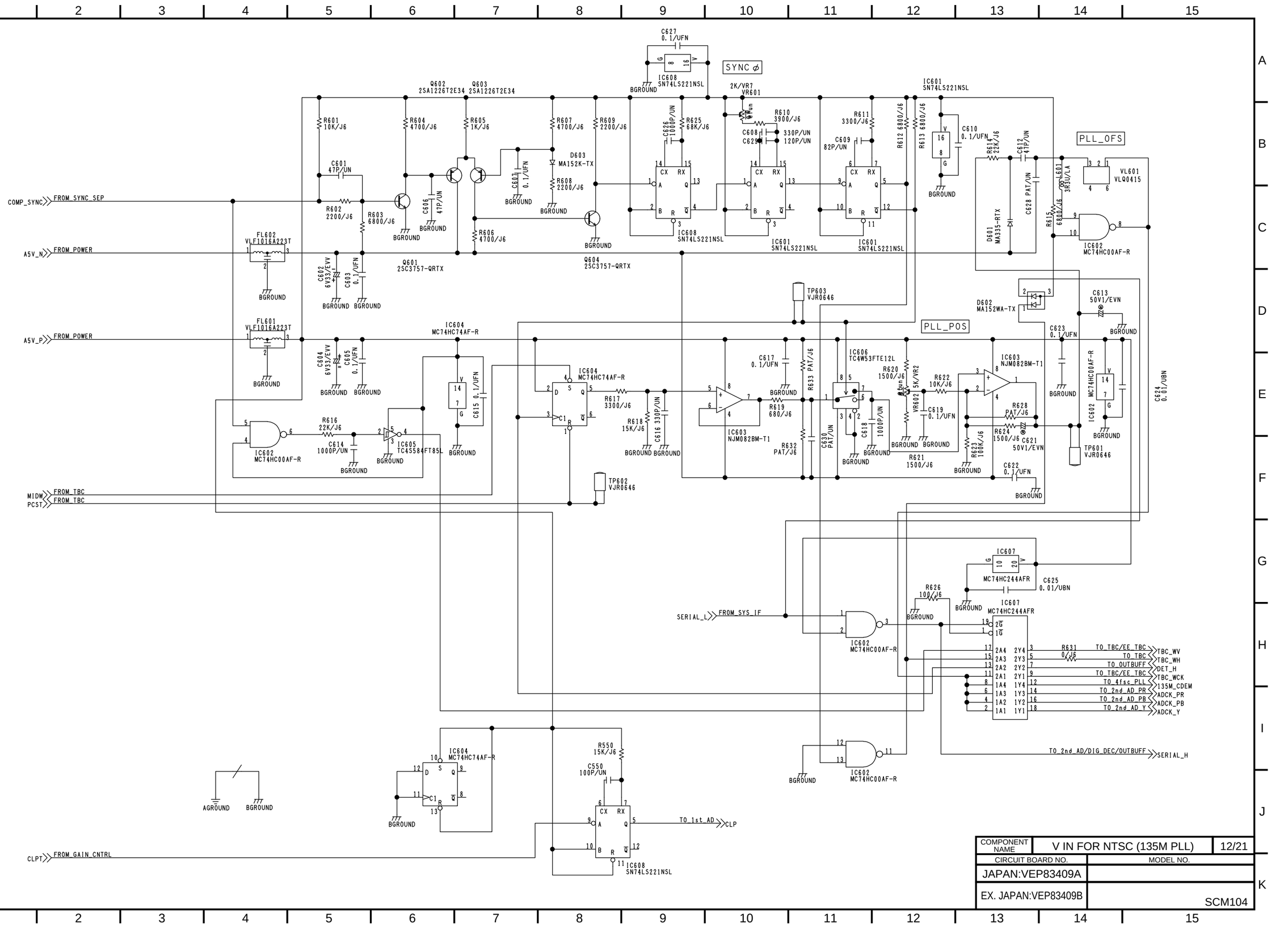

COMPONENT NAME	V IN FOR NTSC (135M PLL)	12/21
CIRCUIT BOARD NO.	MODEL NO.	
JAPAN:VEP83409A		
EX. JAPAN:VEP83409B		SCM104

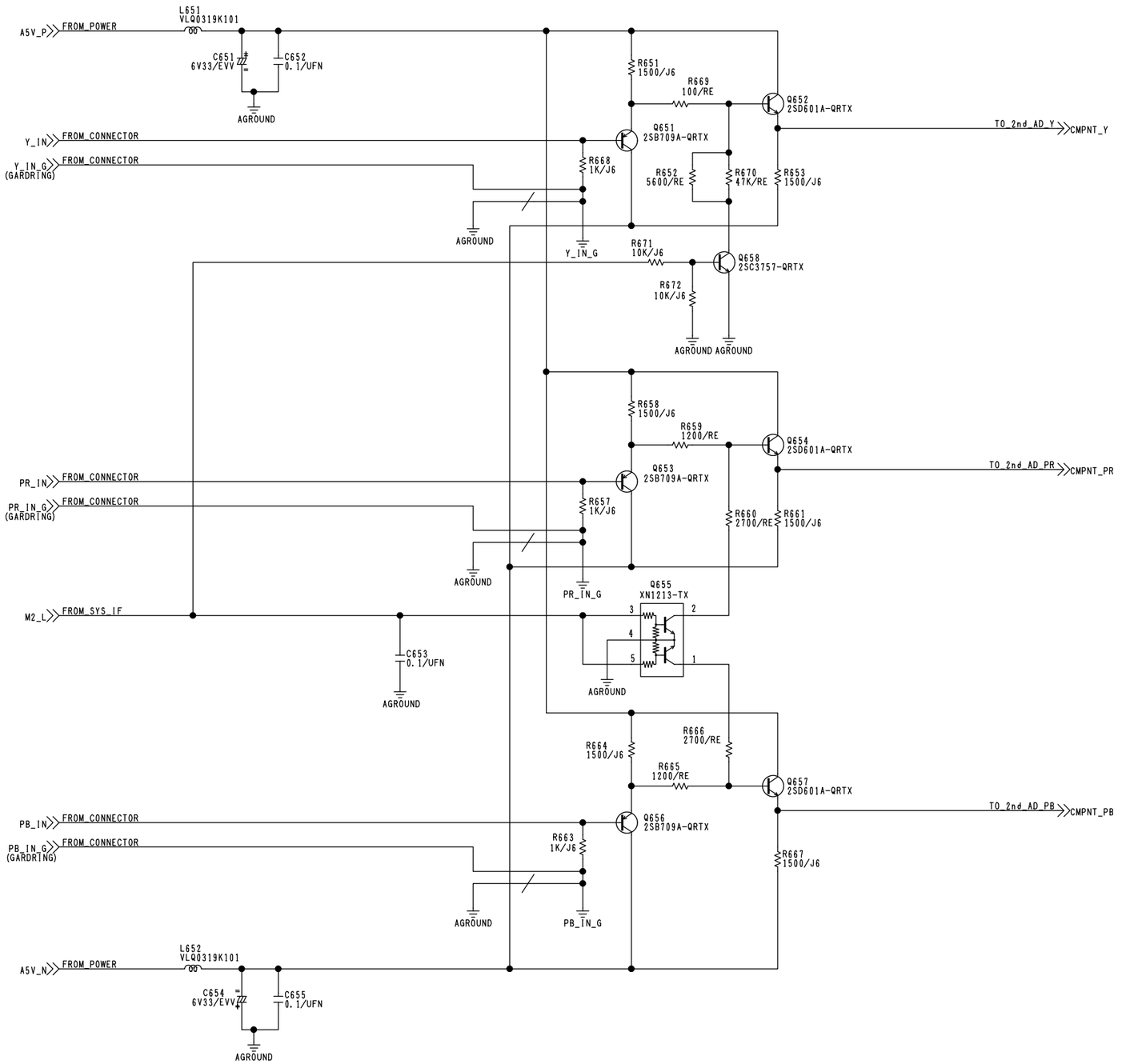

COMPONENT NAME	V IN FOR NTSC (M2 BCAM SELECT)	13/21
CIRCUIT BOARD NO.	MODEL NO.	
JAPAN:VEP83409A		
EX. JAPAN:VEP83409B		SCM105

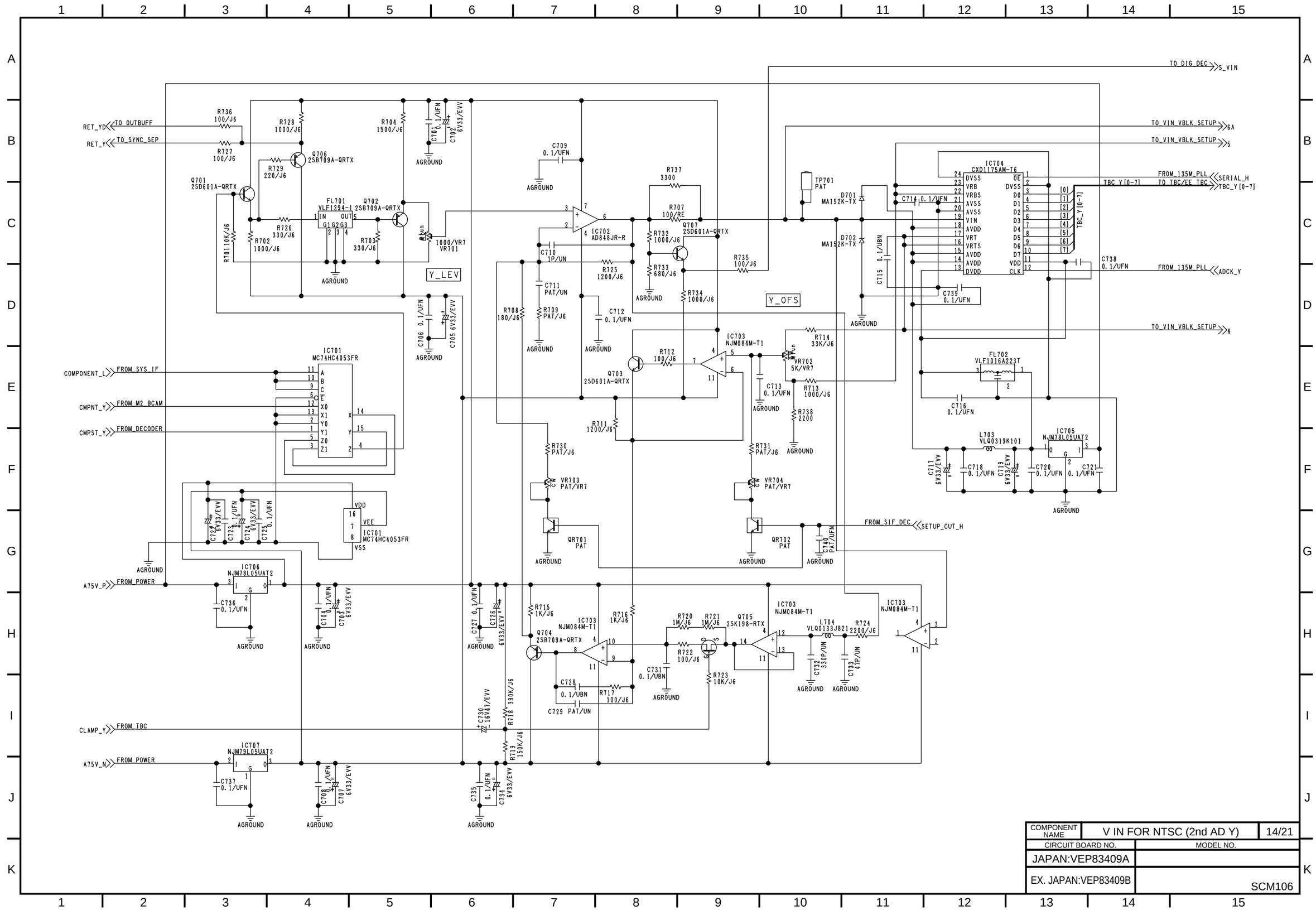

COMPONENT NAME	V IN FOR NTSC (2nd AD Y)	14/21
CIRCUIT BOARD NO.	MODEL NO.	
JAPAN:VEP83409A		
EX. JAPAN:VEP83409B	SCM106	

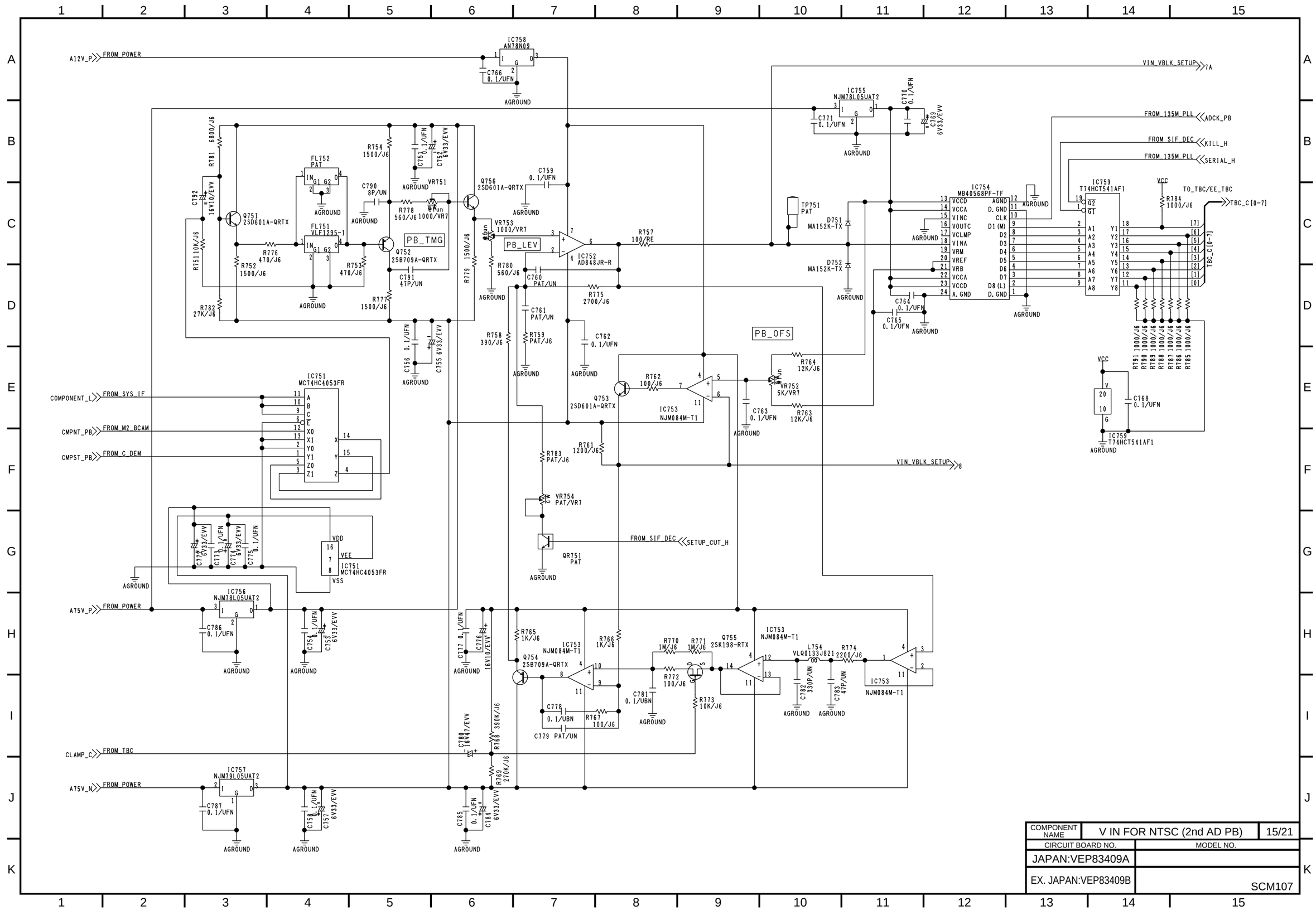

COMPONENT NAME	V IN FOR NTSC (2nd AD PB)	15/21
CIRCUIT BOARD NO.	MODEL NO.	
JAPAN:VEP83409A		
EX. JAPAN:VEP83409B		SCM107

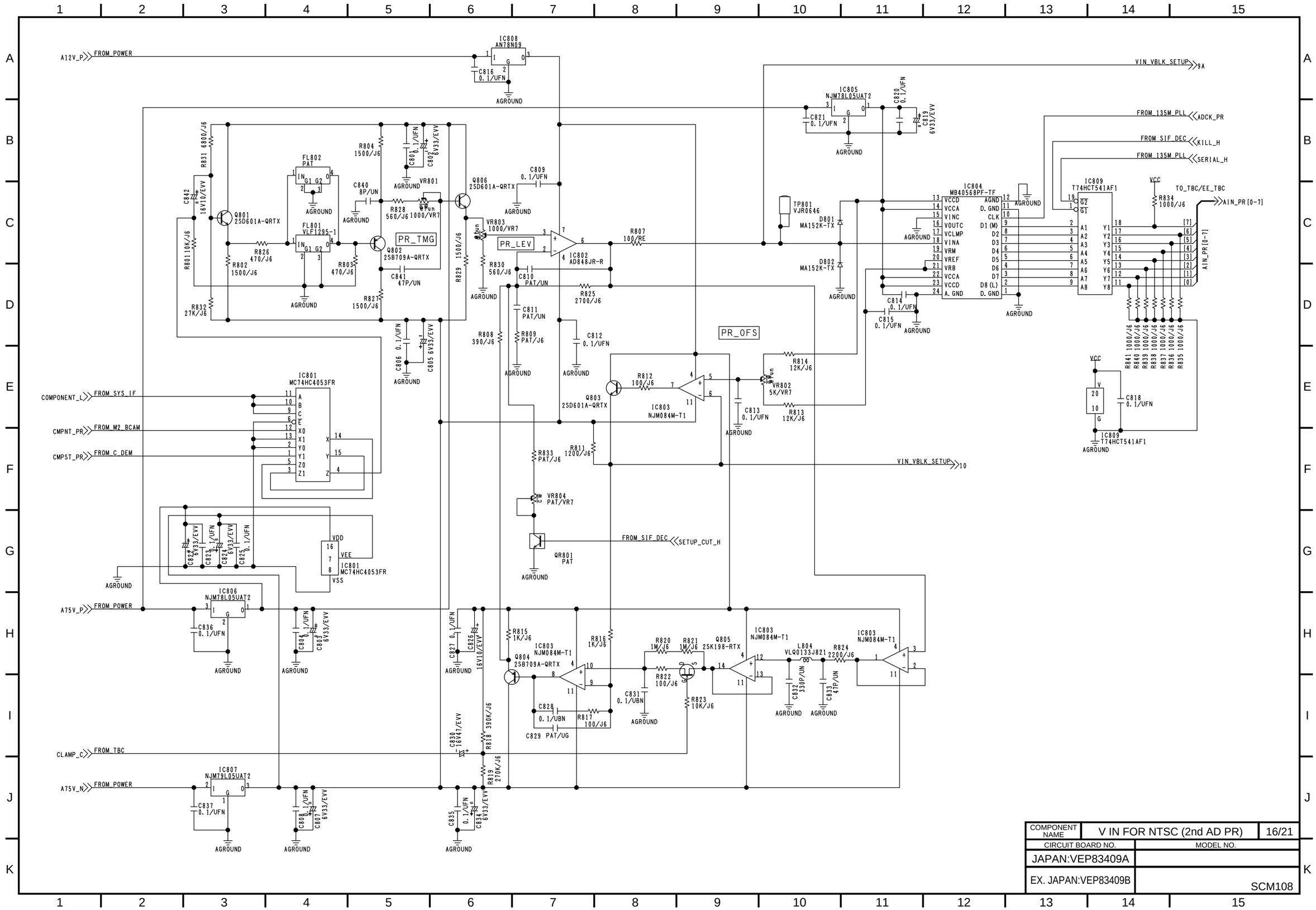

COMPONENT NAME	V IN FOR NTSC (2nd AD PR)	16/21
CIRCUIT BOARD NO.	MODEL NO.	
JAPAN:VEP83409A		
EX. JAPAN:VEP83409B		SCM108

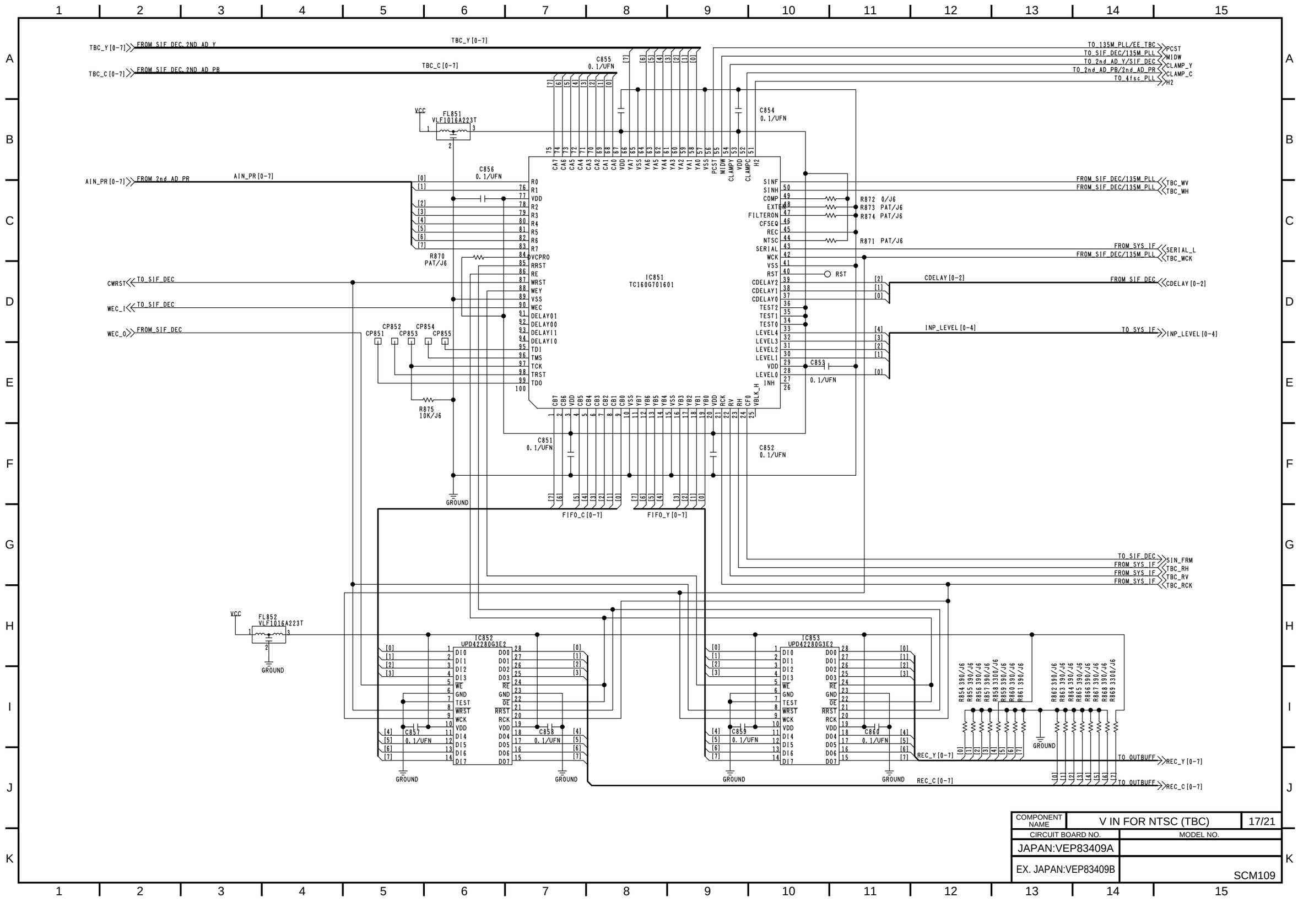

COMPONENT NAME	V IN FOR NTSC (TBC)	17/21
CIRCUIT BOARD NO.	MODEL NO.	
JAPAN:VEP83409A		
EX. JAPAN:VEP83409B		SCM109

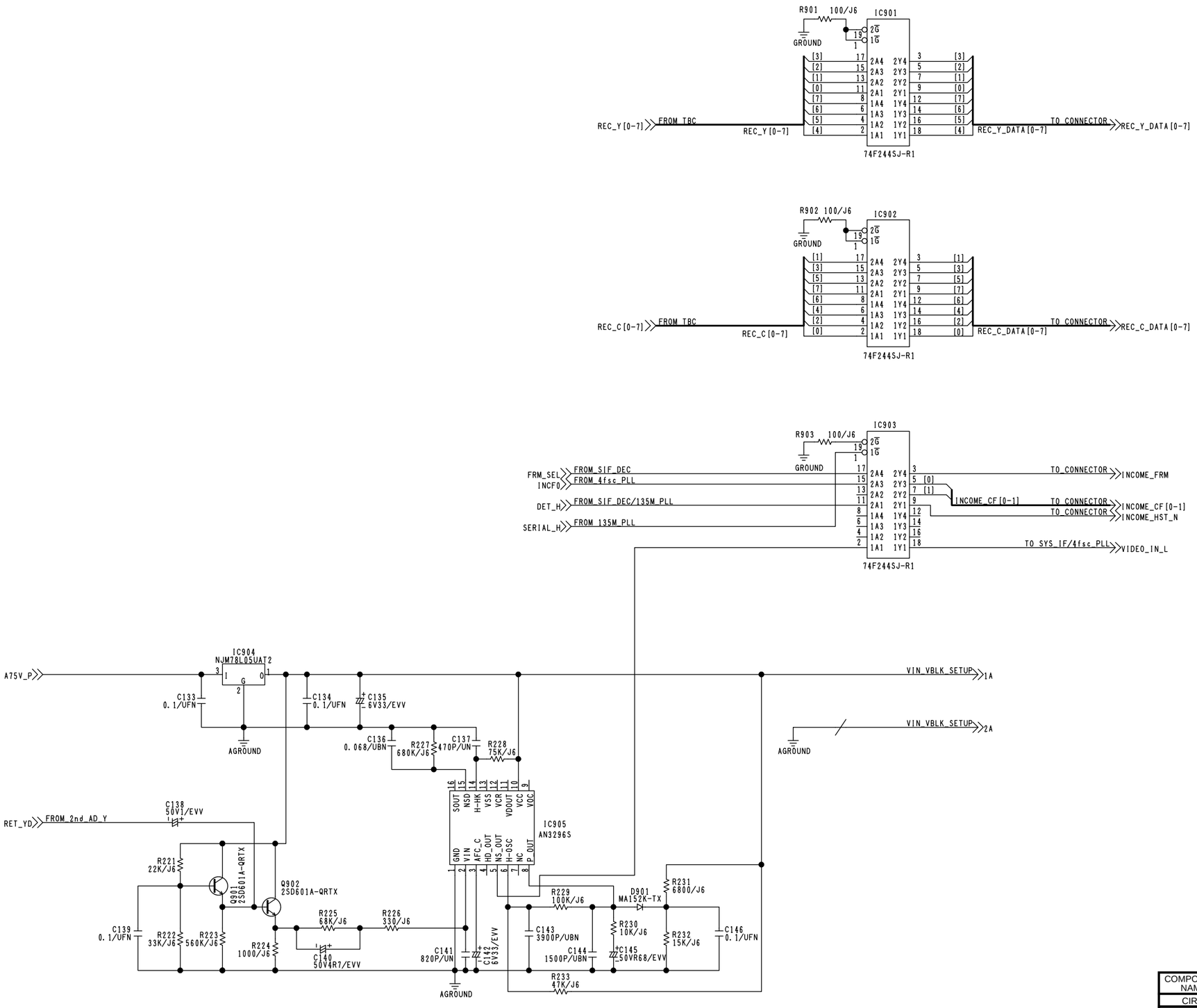

COMPONENT NAME	V IN FOR NTSC (OUT BUFF)	18/21
CIRCUIT BOARD NO.	MODEL NO.	
JAPAN:VEP83409A		
EX. JAPAN:VEP83409B	SCM110	

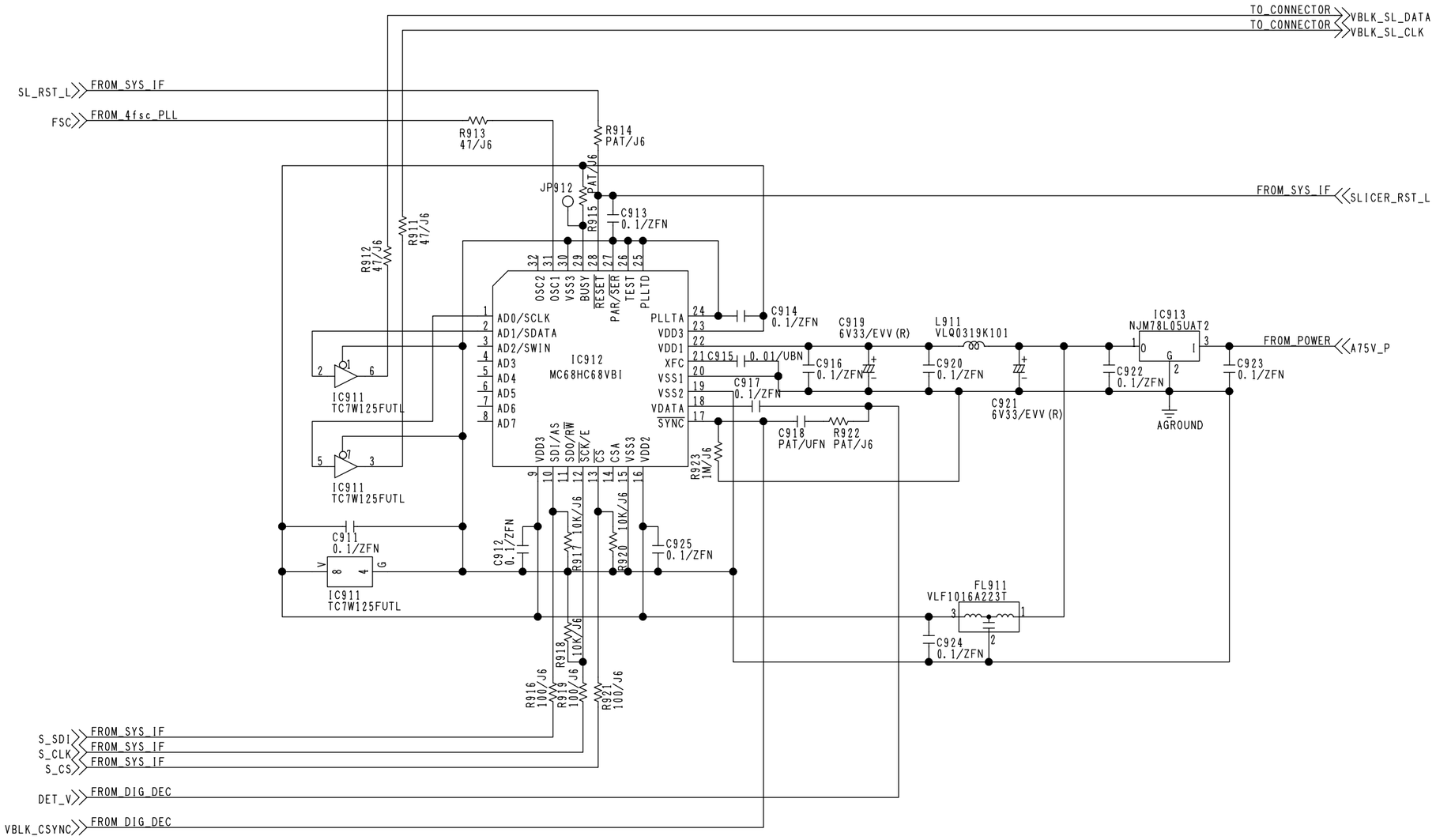

COMPONENT NAME	V IN FOR NTSC (SLICER)	19/21
CIRCUIT BOARD NO.	MODEL NO.	
JAPAN:VEP83409A		
EX. JAPAN:VEP83409B		SCM111

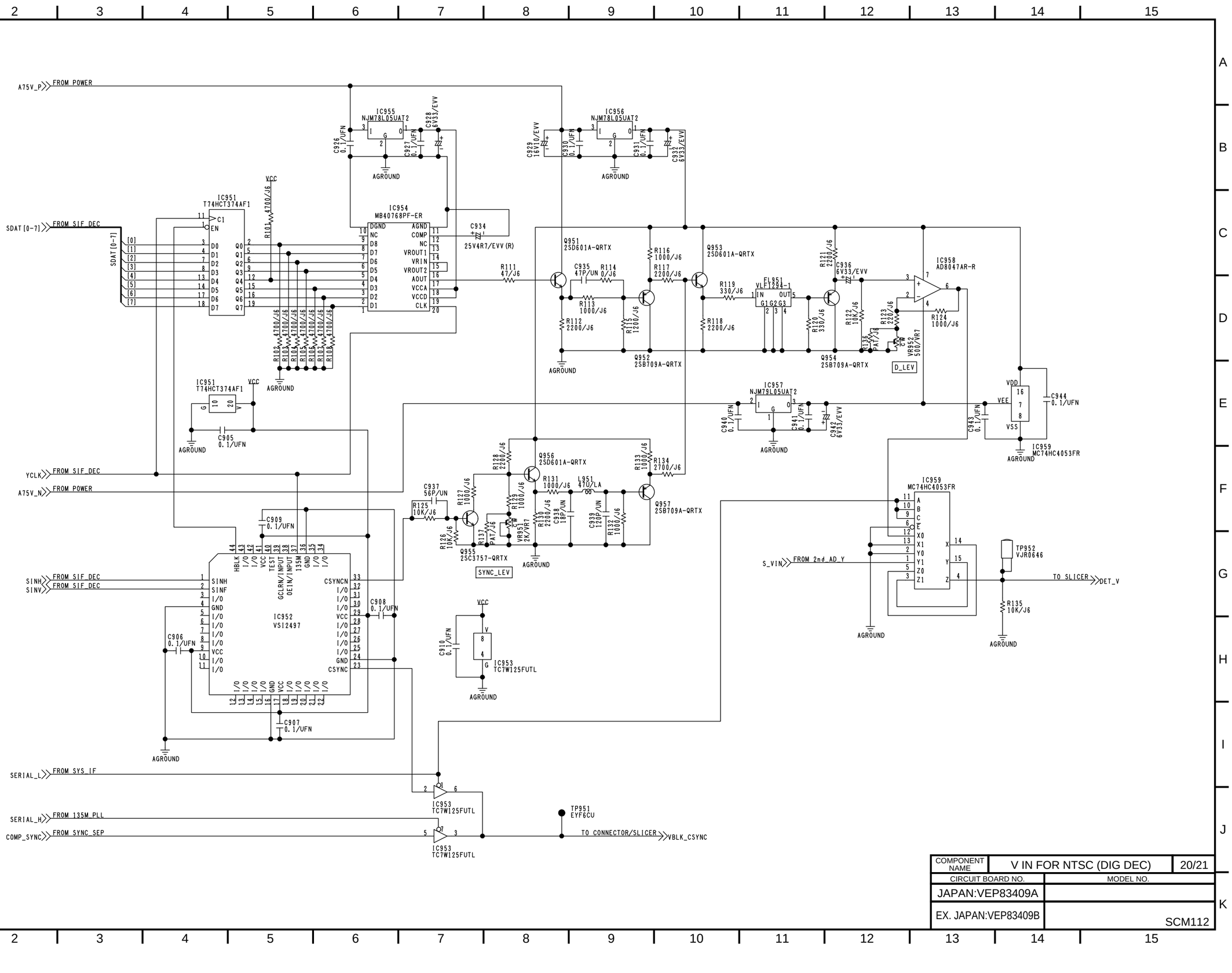

COMPONENT NAME	V IN FOR NTSC (DIG DEC)	20/21
CIRCUIT BOARD NO.	MODEL NO.	
JAPAN:VEP83409A		
EX. JAPAN:VEP83409B		SCM112

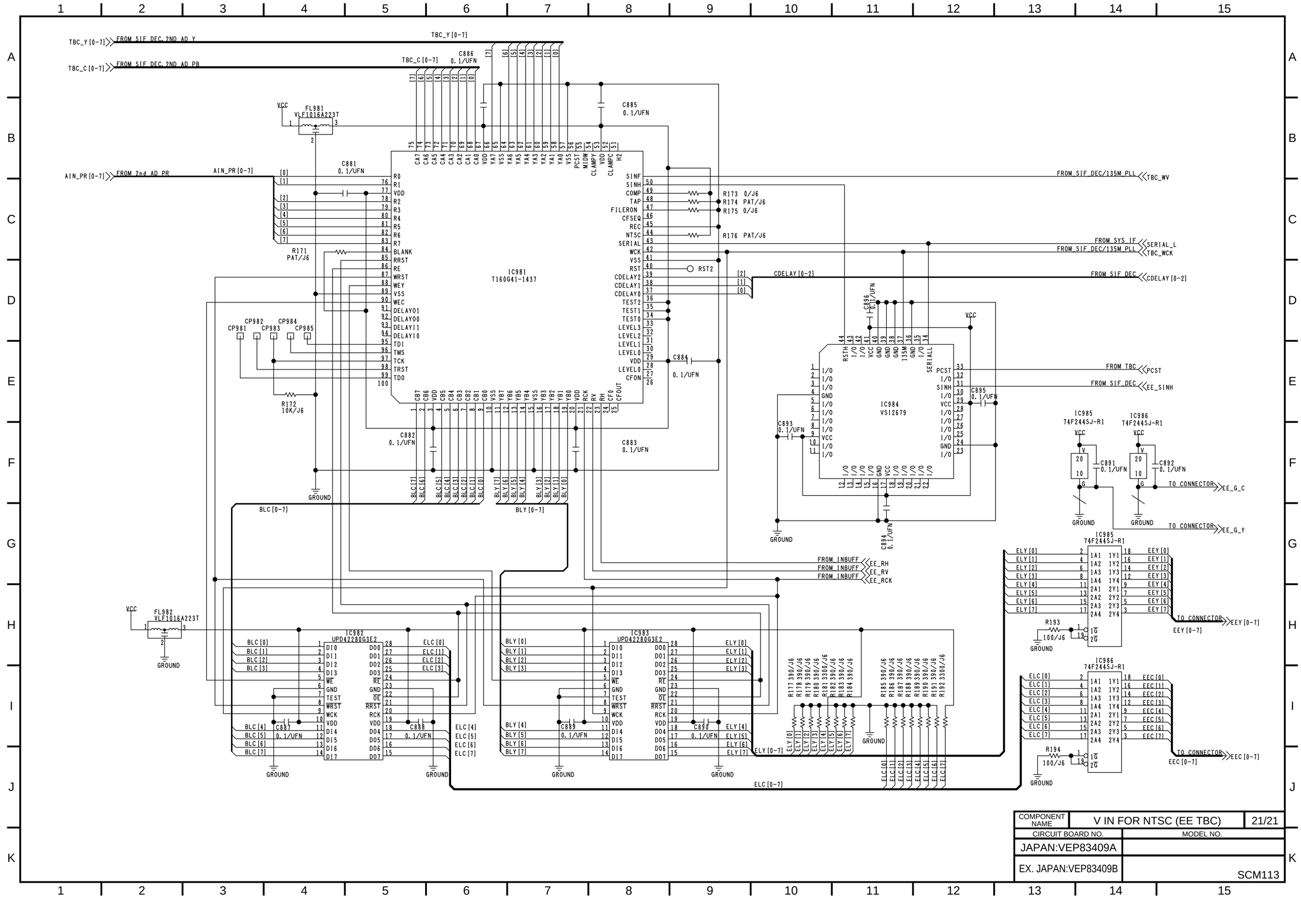

COMPONENT NAME	V IN FOR NTSC (EE TBC) 21/21
CIRCUIT BOARD NO.	MODEL NO.
JAPAN:VEP83409A	
EX. JAPAN:VEP83409B	SCM113

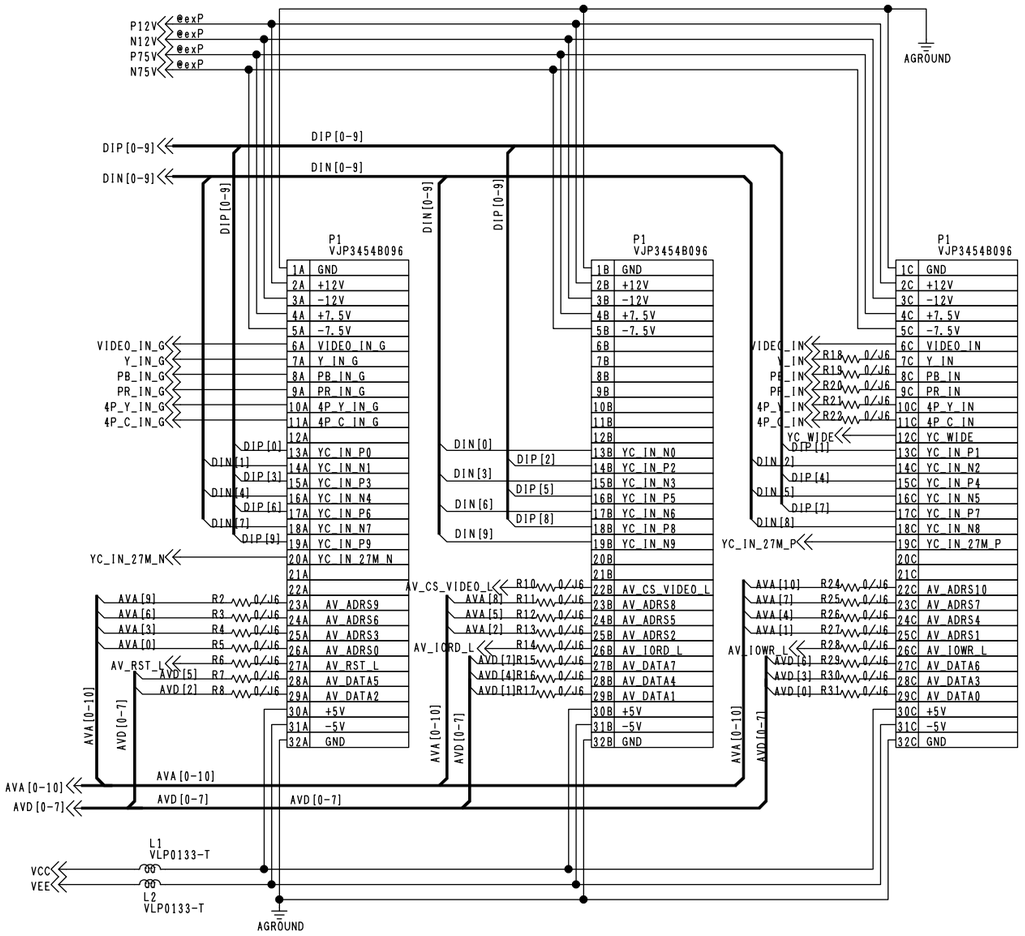

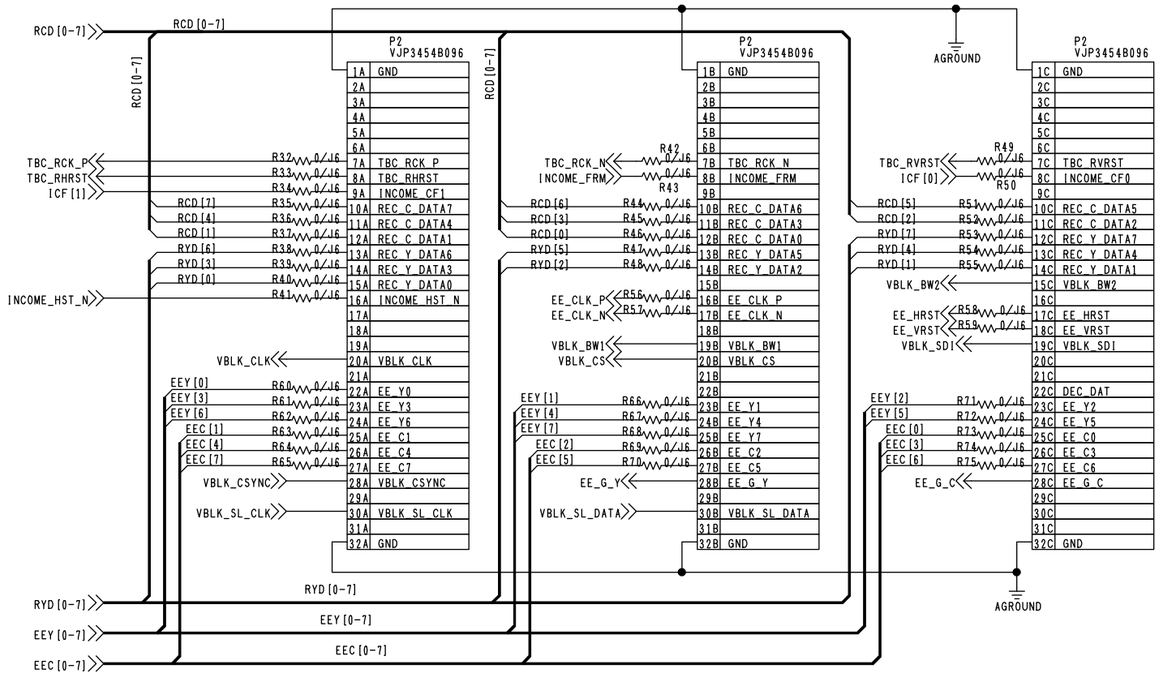

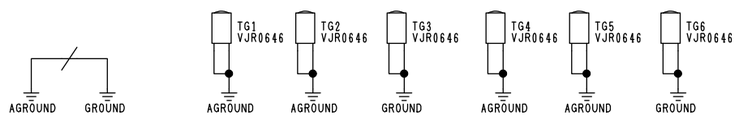

COMPONENT NAME	V IN FOR PAL (CONNECTOR)	01/21
CIRCUIT BOARD NO.	MODEL NO.	
VEP83449A		
	SCM114	

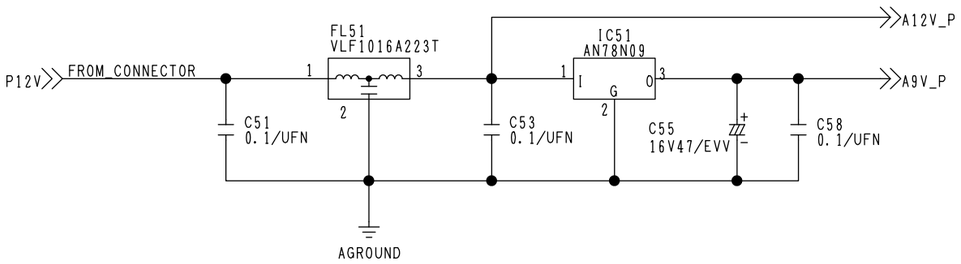

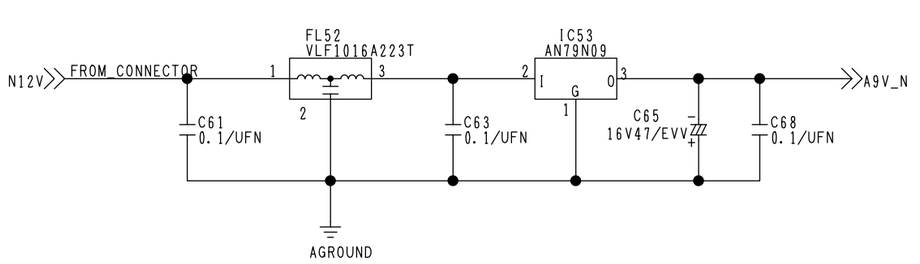

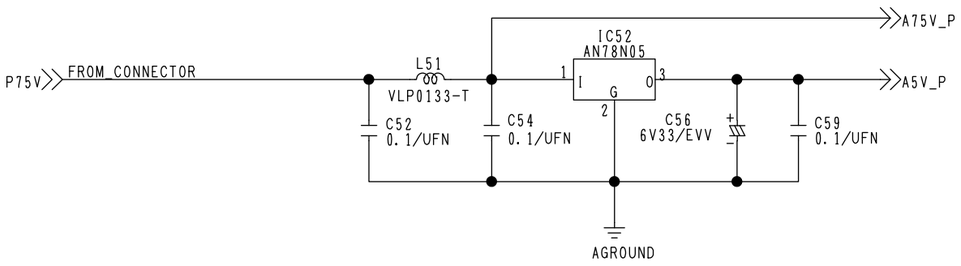

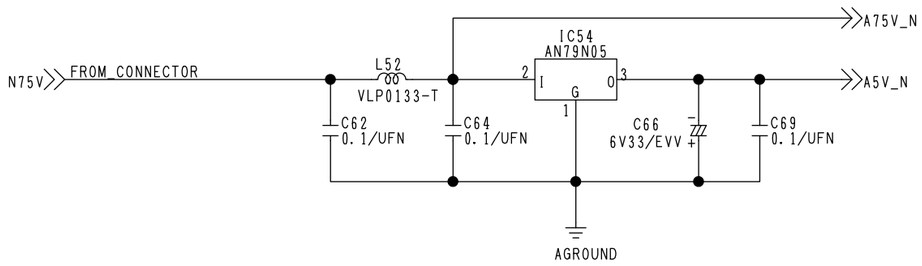

COMPONENT NAME	V IN FOR PAL (POWER)	02/21
CIRCUIT BOARD NO.	MODEL NO.	
VEP83449A		
		SCM115

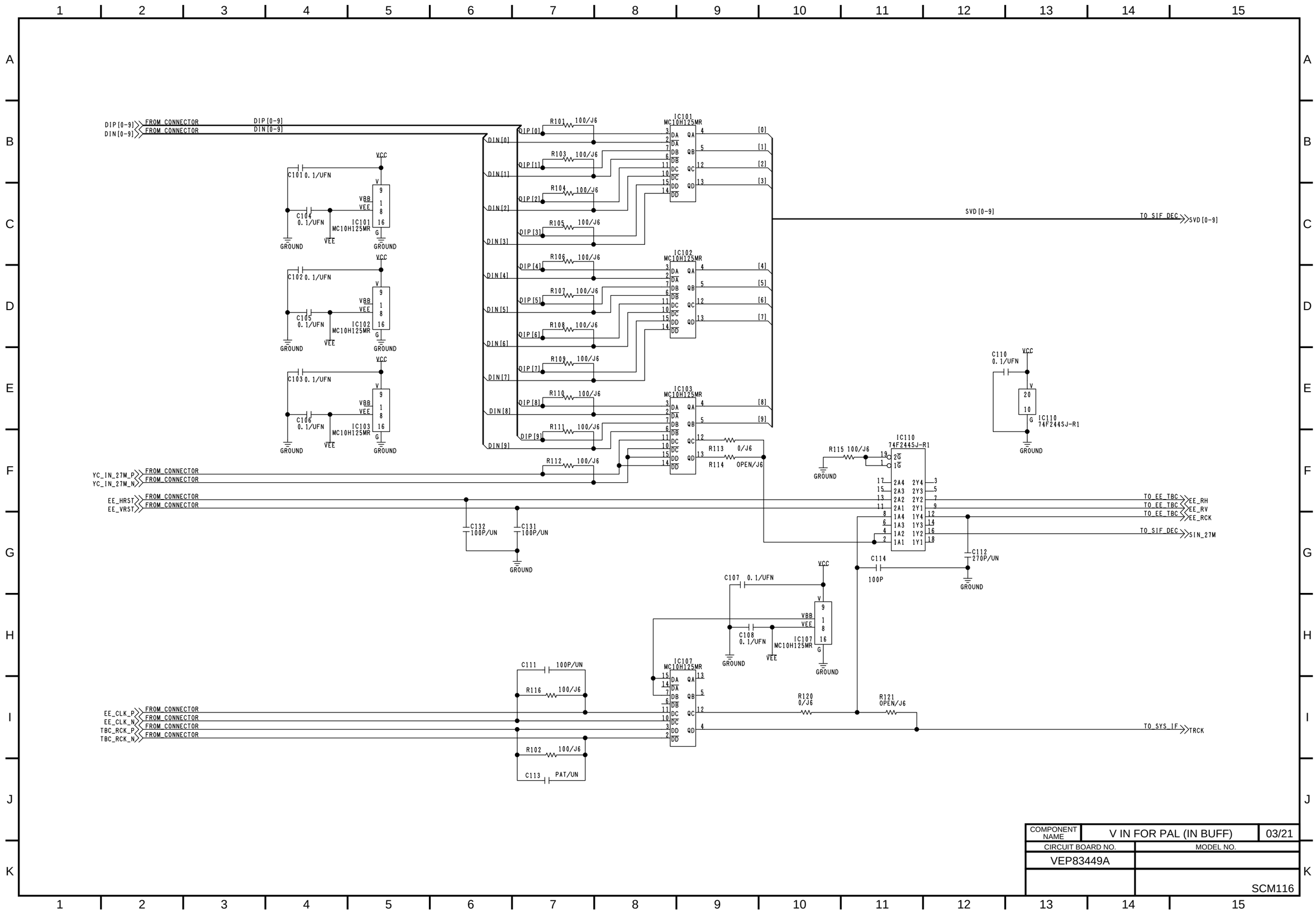

COMPONENT NAME	V IN FOR PAL (IN BUFF)	03/21
CIRCUIT BOARD NO.	MODEL NO.	
VEP83449A		
	SCM116	

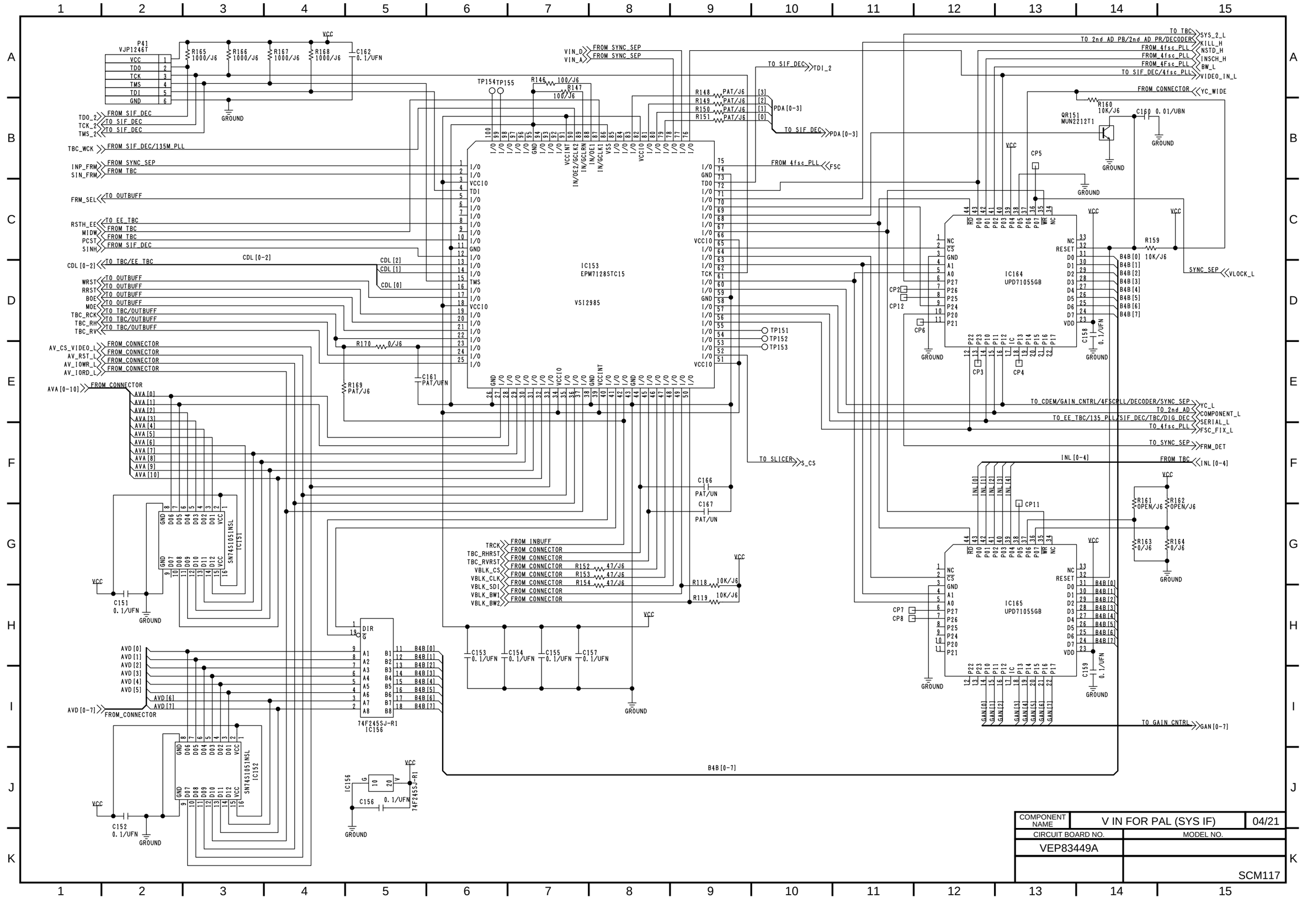
P41
VJP1246T
VCC
TDO
TCK
TMS
TDI
GND
R165 1000/J6
R166 1000/J6
R167 1000/J6
R168 1000/J6
C162 0.1/UFN
GROUND
TDO_2
TCK_2
TMS_2
FROM SIF_DEC
TO SIF_DEC
TO SIF_DEC
TBC_WCK
FROM SIF_DEC/135M PLL
INP_FRM
SIN_FRM
FROM SYNC_SEP
FROM TBC
FRM_SEL
TO OUTBUFF
RSTH_EE
MIDW
PCST
SINH
TO EE_TBC
FROM TBC
FROM TBC
FROM SIF_DEC
CDL [0-2]
TO TBC/EE_TBC
CDL [2]
CDL [1]
CDL [0]
WRST
RRST
BOE
MOE
TBC_RCK
TBC_RH
TBC_RV
TO OUTBUFF
TO OUTBUFF
TO OUTBUFF
TO OUTBUFF
TO TBC/OUTBUFF
TO TBC/OUTBUFF
TO TBC/OUTBUFF
AV_CS_VIDEO_L
AV_RST_L
AV_IOWR_L
AV_IORD_L
FROM CONNECTOR
FROM CONNECTOR
FROM CONNECTOR
FROM CONNECTOR
R170 0/J6
R169 PAT/J6
C161 PAT/UFN
AVA [0-10]
FROM CONNECTOR
AVA [0]
AVA [1]
AVA [2]
AVA [3]
AVA [4]
AVA [5]
AVA [6]
AVA [7]
AVA [8]
AVA [9]
AVA [10]
IC151
SN74S1051NSL
C151 0.1/UFN
GROUND
VCC
AVD [0-7]
FROM_CONNECTOR
AVD [0]
AVD [1]
AVD [2]
AVD [3]
AVD [4]
AVD [5]
AVD [6]
AVD [7]
IC152
SN74S1051NSL
C152 0.1/UFN
GROUND
74F245SJ-R1
IC156
DIR
G
B4B [0]
B4B [1]
B4B [2]
B4B [3]
B4B [4]
B4B [5]
B4B [6]
B4B [7]
B4B [0-7]
C153 0.1/UFN
C154 0.1/UFN
C155 0.1/UFN
C157 0.1/UFN
C156 0.1/UFN
IC153
EPM7128STC15
VSI2985
TP154
TP155
R146 100/J6
R147 100/J6
VIN_D
VIN_A
FROM SYNC_SEP
FROM SYNC_SEP
TO SIF_DEC
TDI_2
R148 PAT/J6 [3]
R149 PAT/J6 [2]
R150 PAT/J6 [1]
R151 PAT/J6 [0]
PDA [0-3]
TO SIF_DEC
PDA [0-3]
FROM 4fsc PLL
FSC
TP151
TP152
TP153
TO SLICER
S_CS
C166 PAT/UN
C167 PAT/UN
TRCK
TBC_RHRST
TBC_RVRST
VBLK_CS
VBLK_CLK
VBLK_SDI
VBLK_BW1
VBLK_BW2
FROM INBUFF
FROM CONNECTOR
FROM CONNECTOR
FROM CONNECTOR
FROM CONNECTOR
FROM CONNECTOR
FROM CONNECTOR
FROM CONNECTOR
FROM CONNECTOR
R152 47/J6
R153 47/J6
R154 47/J6
R118 10K/J6
R119 10K/J6
TO TBC
TO 2nd AD PB/2nd AD PR/DECODER
FROM 4fsc PLL
FROM 4fsc PLL
FROM 4fsc PLL
TO SIF DEC/4fsc PLL
SYS_2_L
KILL_H
NSTD_H
INSCH_H
BW_L
VIDEO_IN_L
FROM CONNECTOR
YC_WIDE
QR151
MUN2212T1
R160 10K/J6
C160 0.01/UBN
GROUND
CP5
IC164
UPD71055GB
CP2
CP12
CP6
CP3
CP4
C158 0.1/UFN
R159 10K/J6
SYNC_SEP
VLOCK_L
TO CDEM/GAIN CNTRL/4FSCPLL/DECODER/SYNC_SEP
TO 2nd AD
TO EE_TBC/135 PLL/SIF DEC/TBC/DIG DEC
TO 4fsc PLL
YC_L
COMPONENT_L
SERIAL_L
FSC_FIX_L
TO SYNC SEP
FRM_DET
INL [0-4]
FROM TBC
INL [0-4]
CP11
R161 OPEN/J6
R162 OPEN/J6
R163 0/J6
R164 0/J6
IC165
UPD71055GB
CP7
CP8
C159 0.1/UFN
GAN [0-7]
TO GAIN CNTRL
COMPONENT NAME
V IN FOR PAL (SYS IF)
04/21
CIRCUIT BOARD NO.
VEP83449A
MODEL NO.
SCM117

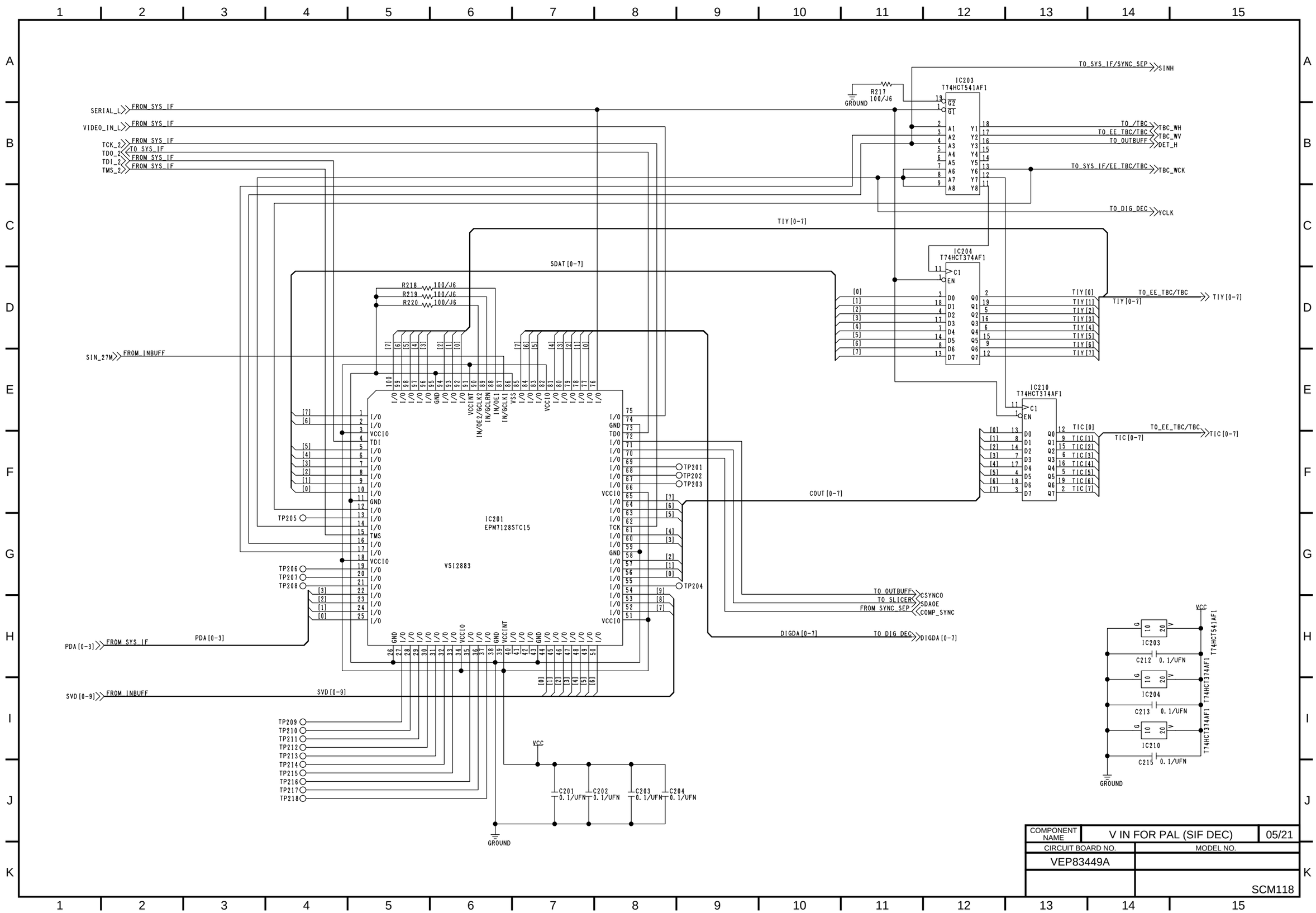

COMPONENT NAME	V IN FOR PAL (SIF DEC)	05/21
CIRCUIT BOARD NO.	MODEL NO.	
VEP83449A		
		SCM118

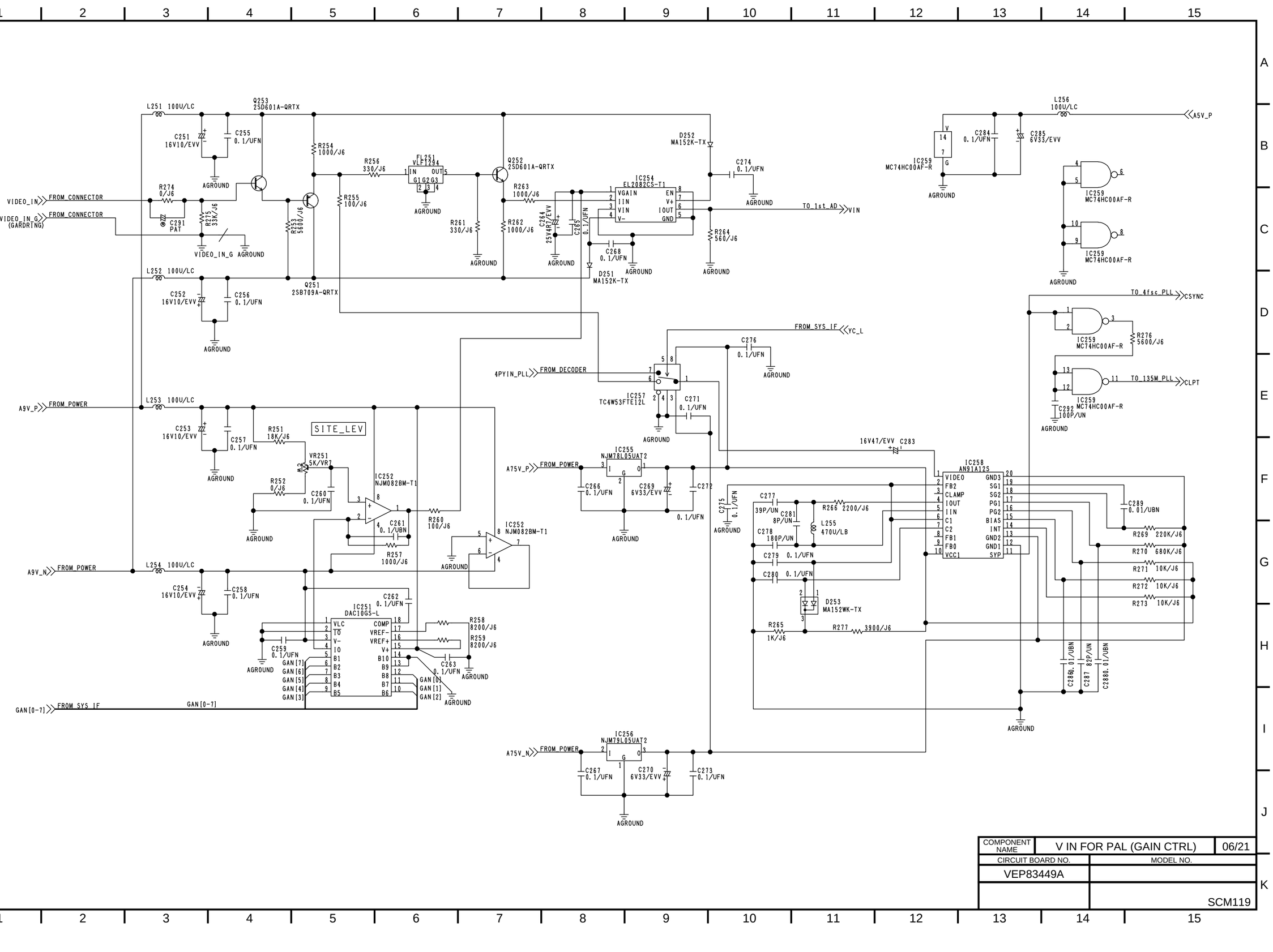

COMPONENT NAME	V IN FOR PAL (GAIN CTRL)	06/21
CIRCUIT BOARD NO.	MODEL NO.	
VEP83449A		
		SCM119

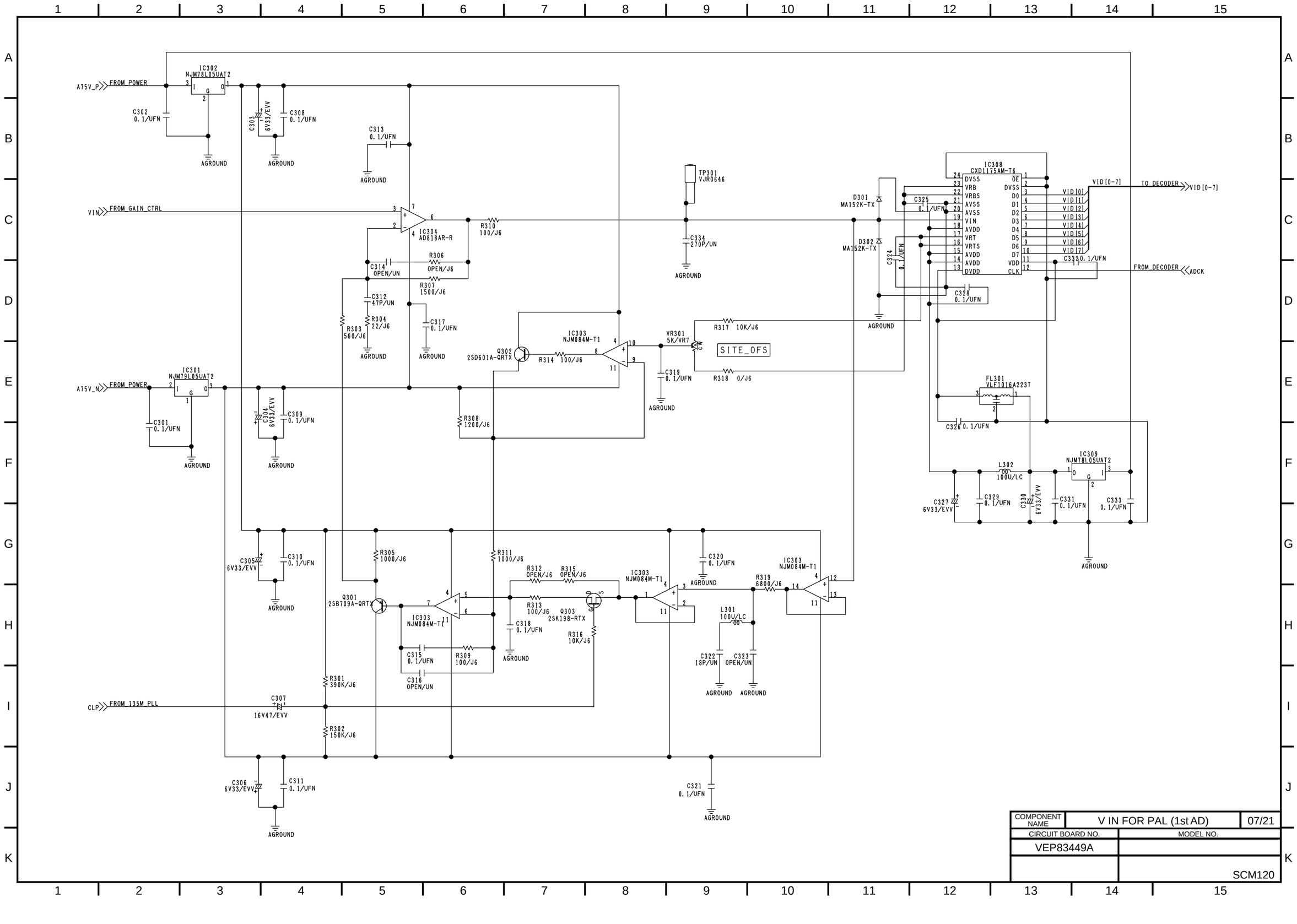

COMPONENT NAME	V IN FOR PAL (1st AD)	07/21
CIRCUIT BOARD NO.		MODEL NO.
VEP83449A		
		SCM120

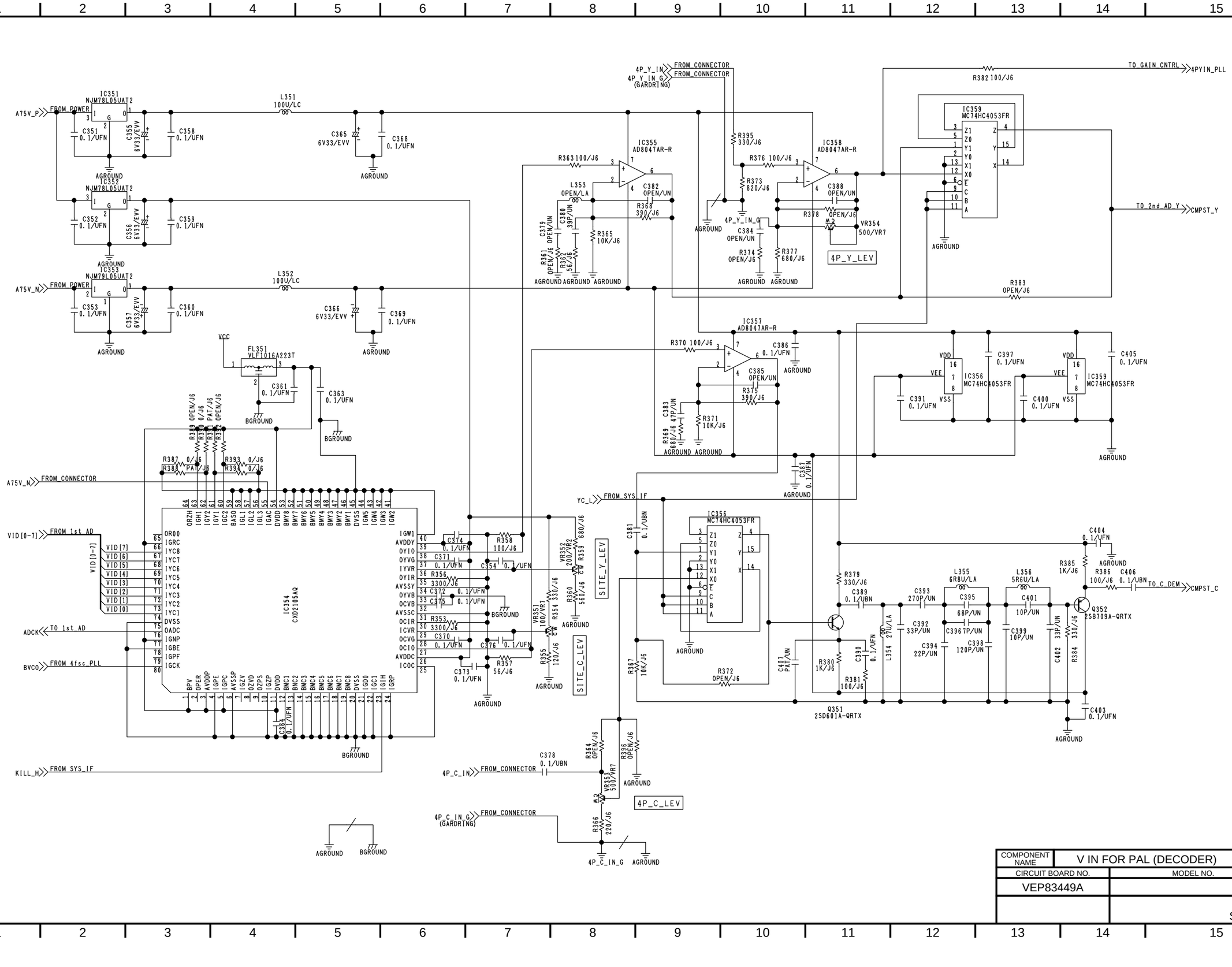

COMPONENT NAME	V IN FOR PAL (DECODER) 08/21
CIRCUIT BOARD NO.	MODEL NO.
VEP83449A	
	SCM121

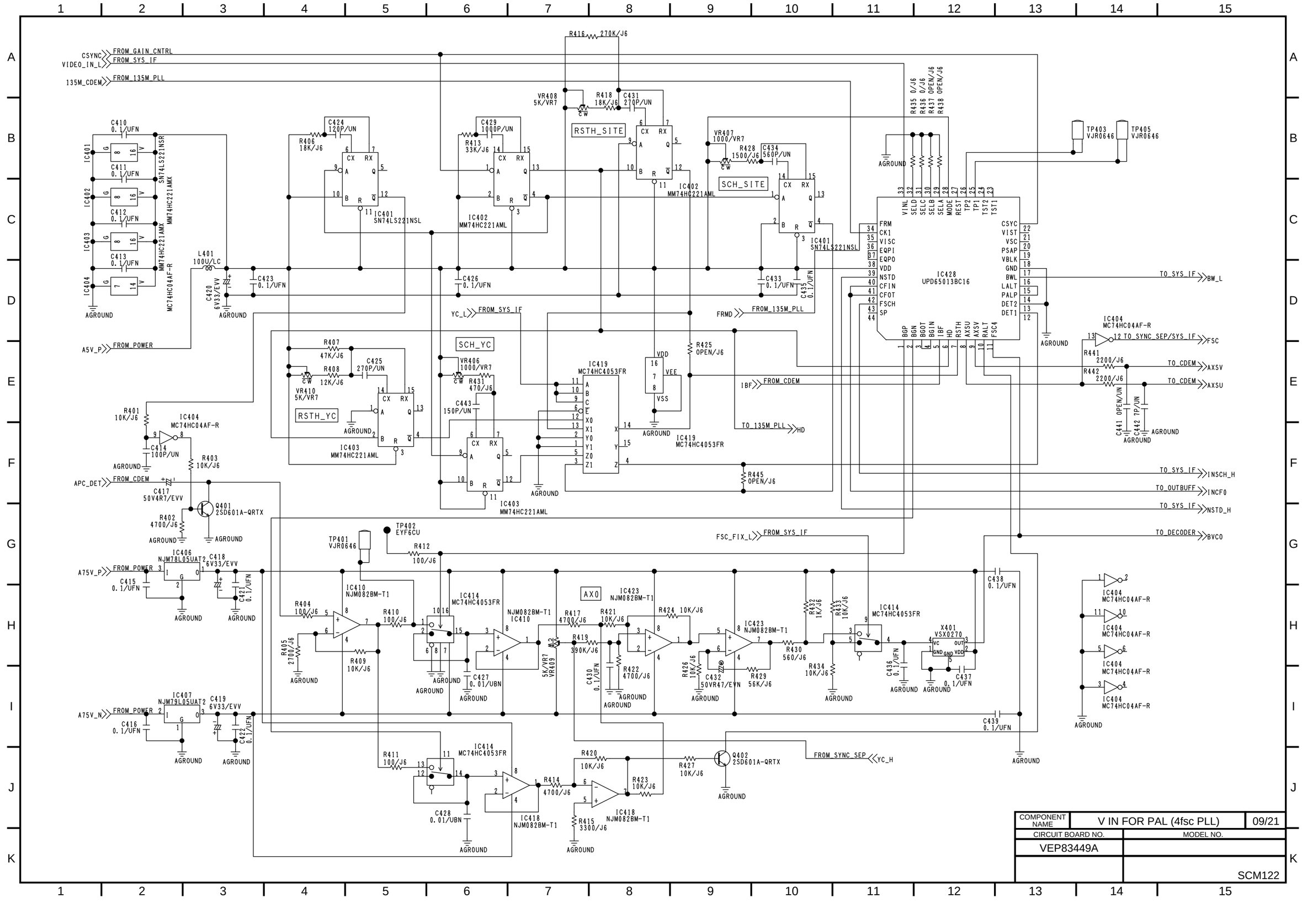

COMPONENT NAME	V IN FOR PAL (4fsc PLL)	09/21
CIRCUIT BOARD NO.	MODEL NO.	
VEP83449A		
		SCM122

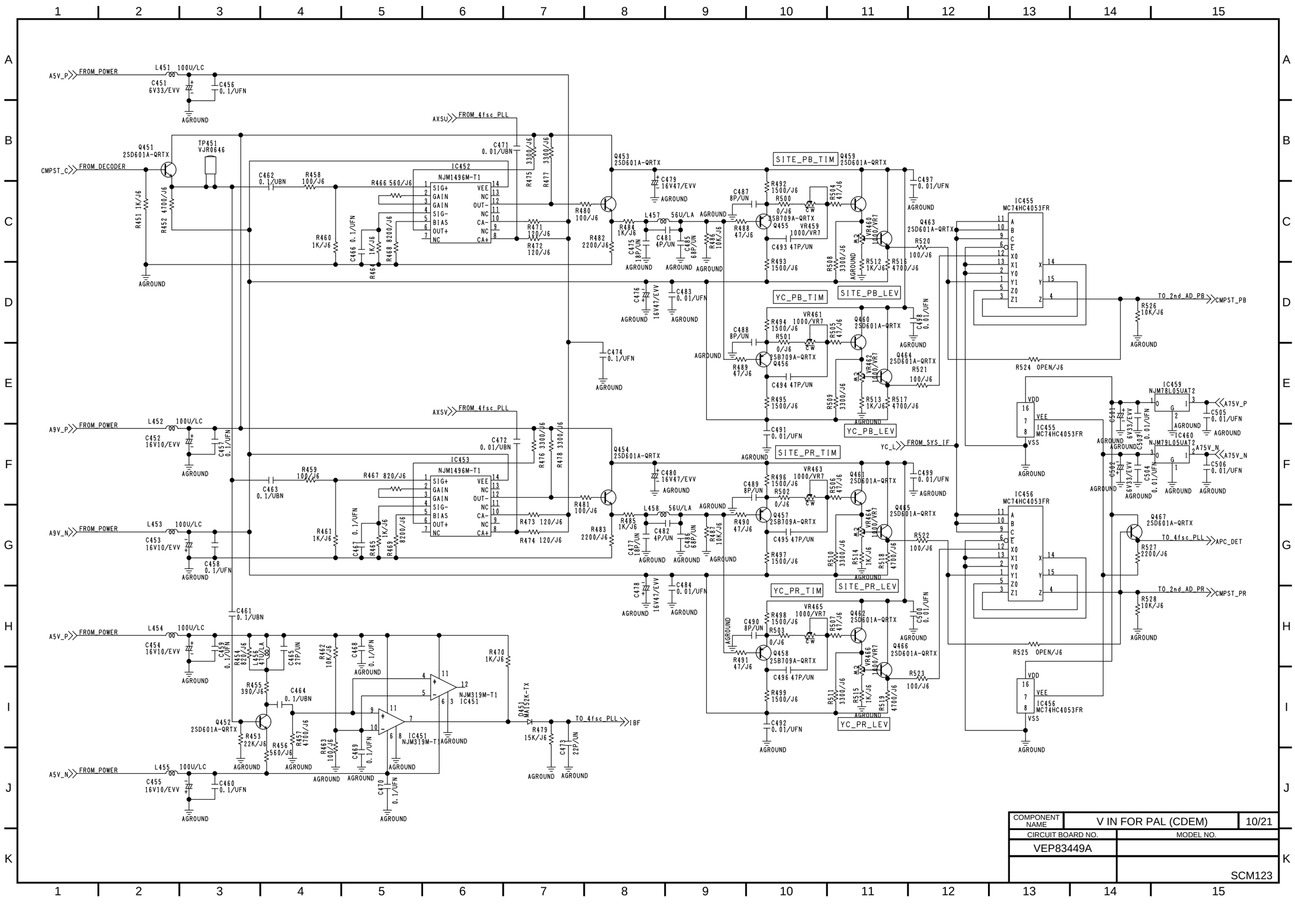

COMPONENT NAME	V IN FOR PAL (CDEM)	10/21
CIRCUIT BOARD NO.	MODEL NO.	
VEP83449A		
		SCM123

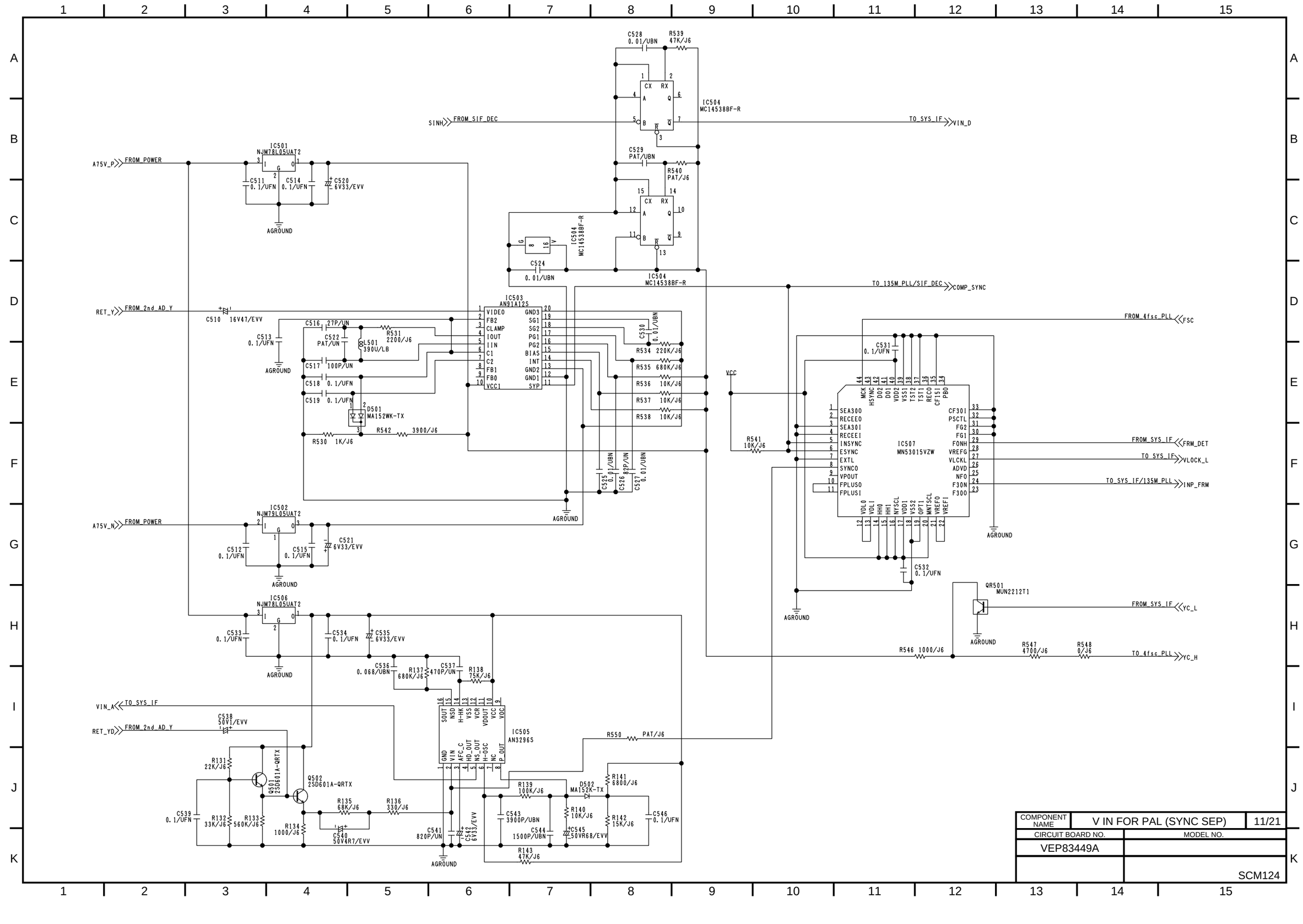
IC501
NJM78L05UAT2
A75V_P
FROM_POWER
C511 0.1/UFN
C514 0.1/UFN
C520 6V33/EVV
AGROUND
IC502
NJM79L05UAT2
A75V_N
FROM_POWER
C512 0.1/UFN
C515 0.1/UFN
C521 6V33/EVV
AGROUND
IC506
NJM78L05UAT2
C533 0.1/UFN
C534 0.1/UFN
C535 6V33/EVV
AGROUND
C528 0.01/UBN
R539 47K/J6
IC504
MC14538BF-R
SINH
FROM_SIF_DEC
TO_SYS_IF
VIN_D
C529 PAT/UBN
R540 PAT/J6
C524 0.01/UBN
TO_135M_PLL/SIF_DEC
COMP_SYNC
RET_Y
FROM_2nd_AD_Y
C510 16V47/EVV
C513 0.1/UFN
C516 27P/UN
C522 PAT/UN
L501 390U/LB
R531 2200/J6
C517 100P/UN
C518 0.1/UFN
C519 0.1/UFN
D501 MA152WK-TX
R530 1K/J6
R542 3900/J6
IC503
AN91A12S
VIDEO
FB2
CLAMP
IOUT
IIN
C1
C2
FB1
FB0
VCC1
GND3
SG1
SG2
PG1
PG2
BIAS
INT
GND2
GND1
SYP
C530 0.01/UBN
R534 220K/J6
R535 680K/J6
R536 10K/J6
R537 10K/J6
R538 10K/J6
C525 0.01/UBN
C526 82P/UN
C527 0.01/UBN
AGROUND
VCC
R541 10K/J6
FROM_4fsc_PLL
FSC
C531 0.1/UFN
IC507
MN53015VZW
SEA30O
RECEEO
SEA30I
RECEEI
INSYNC
ESYNC
EXTL
SYNCO
VPOUT
FPLUSO
FPLUSI
MCK
HSYNC
DO2
DO1
VDD2
VSS1
TST2
TST1
RECO
CF15I
PBO
CF30I
PSCTL
FG2
FG1
FONH
VREFG
VLCKL
ADVD
NFO
F30N
F30O
VDL0
VDL1
HH0
HH1
NYSCL
VDD1
VSS2
OPT1
MNTSCL
VREF0
VREF1
FROM_SYS_IF
FRM_DET
TO_SYS_IF
VLOCK_L
TO_SYS_IF/135M_PLL
INP_FRM
AGROUND
C532 0.1/UFN
QR501
MUN2212T1
FROM_SYS_IF
YC_L
AGROUND
R546 1000/J6
R547 4700/J6
R548 0/J6
TO_4fsc_PLL
YC_H
VIN_A
TO_SYS_IF
RET_YD
FROM_2nd_AD_Y
C538 50V1/EVV
IC505
AN3296S
SOUT
NSD
H-HK
VSS
VCR
VDOUT
VCC
VOC
GND
VIN
AFC_C
HD_OUT
NS_OUT
H-OSC
NC
P_OUT
R550 PAT/J6
R131 22K/J6
Q502 2SD601A-QRTX
Q501 2SD601A-QRTX
R132 33K/J6
R133 560K/J6
R134 1000/J6
R135 68K/J6
R136 330/J6
C539 0.1/UFN
C540 50V4R7/EVV
C541 820P/UN
C542 6V33/EVV
R139 100K/J6
D502 MA152K-TX
R140 10K/J6
R141 6800/J6
R142 15K/J6
C543 3900P/UBN
C544 1500P/UBN
C545 50VR68/EVV
C546 0.1/UFN
R143 47K/J6
COMPONENT NAME
V IN FOR PAL (SYNC SEP)
11/21
CIRCUIT BOARD NO.
VEP83449A
MODEL NO.
SCM124

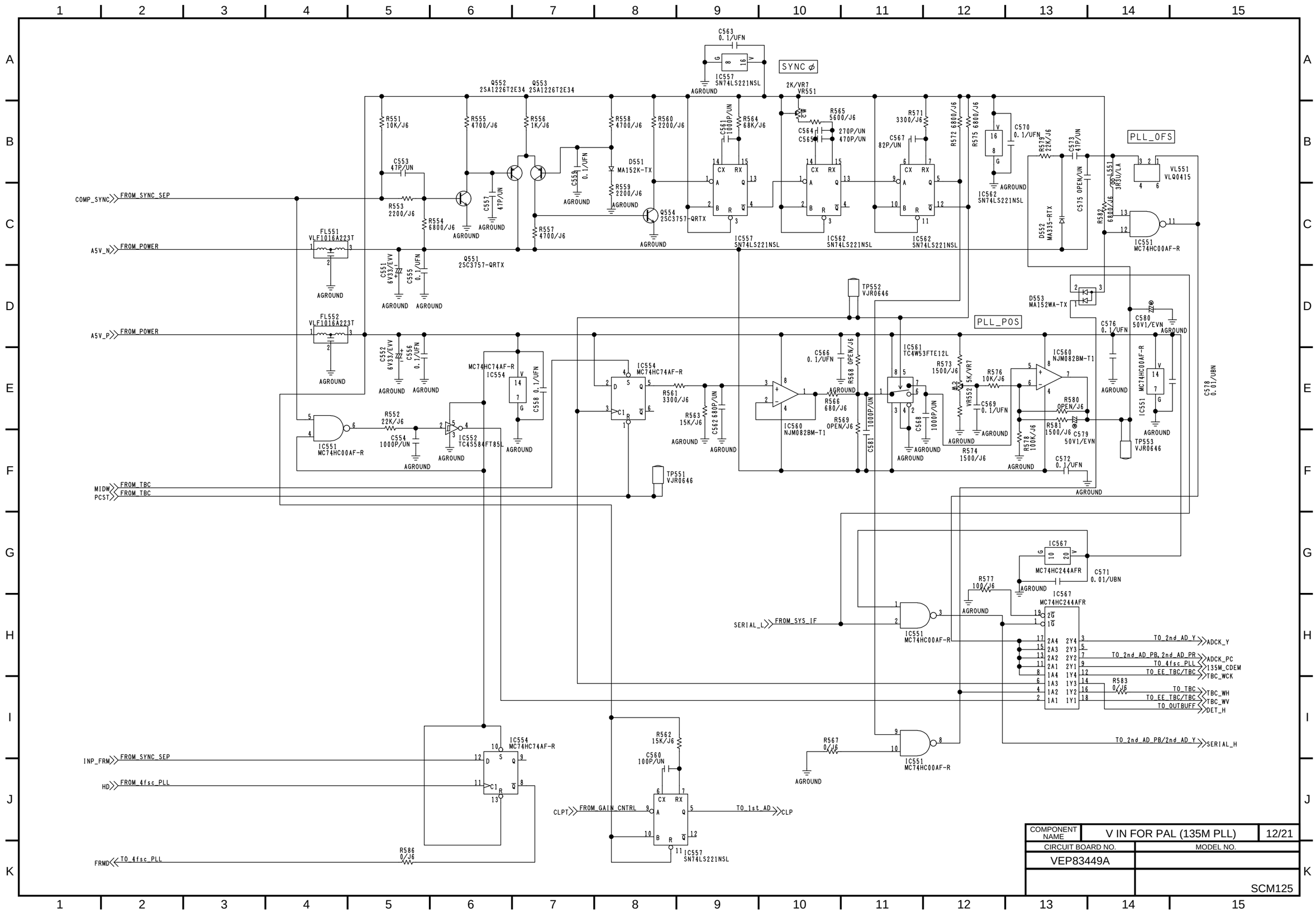
SYNC ø
PLL_OFS
PLL_POS
COMP_SYNC FROM_SYNC_SEP
A5V_N FROM_POWER
A5V_P FROM_POWER
MIDW FROM_TBC
PCST FROM_TBC
INP_FRM FROM_SYNC_SEP
HD FROM_4fsc_PLL
FRMD TO_4fsc_PLL
SERIAL_L FROM_SYS_IF
CLPT FROM_GAIN_CNTRL
TO_1st_AD CLP
TO_2nd_AD_Y ADCK_Y
TO_2nd_AD_PB, 2nd_AD_PR ADCK_PC
TO_4fsc_PLL 135M_CDEM
TO_EE_TBC/TBC TBC_WCK
TO_TBC TBC_WH
TO_EE_TBC/TBC TBC_WV
TO_OUTBUFF DET_H
TO_2nd_AD_PB/2nd_AD_Y SERIAL_H
IC557 SN74LS221NSL
IC562 SN74LS221NSL
IC551 MC74HC00AF-R
IC552 TC4S584FT85L
IC554 MC74HC74AF-R
IC560 NJM082BM-T1
IC561 TC4W53FTE12L
IC567 MC74HC244AFR
Q551 2SC3757-QRTX
Q552 2SA1226T2E34
Q553 2SA1226T2E34
Q554 2SC3757-QRTX
D551 MA152K-TX
D552 MA335-RTX
D553 MA152WA-TX
VL551 VLQ0415
TP551 VJR0646
TP552 VJR0646
TP553 VJR0646
AGROUND
COMPONENT NAME: V IN FOR PAL (135M PLL)
12/21
CIRCUIT BOARD NO.: VEP83449A
MODEL NO.:
SCM125

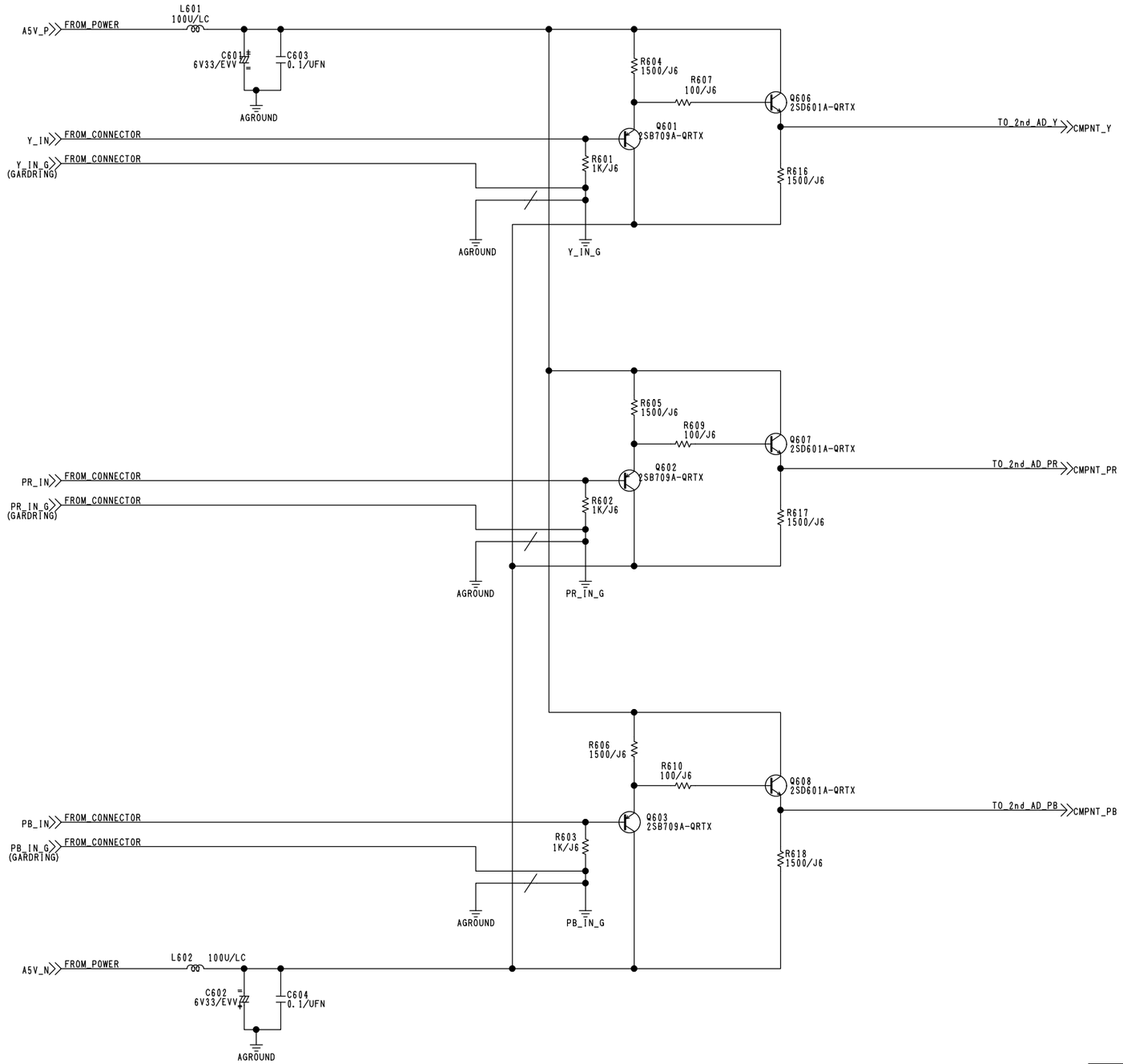

COMPONENT NAME	V IN FOR PAL (M2 BCAM SELECT)	13/21
CIRCUIT BOARD NO.	MODEL NO.	
VEP83449A		
	SCM126	

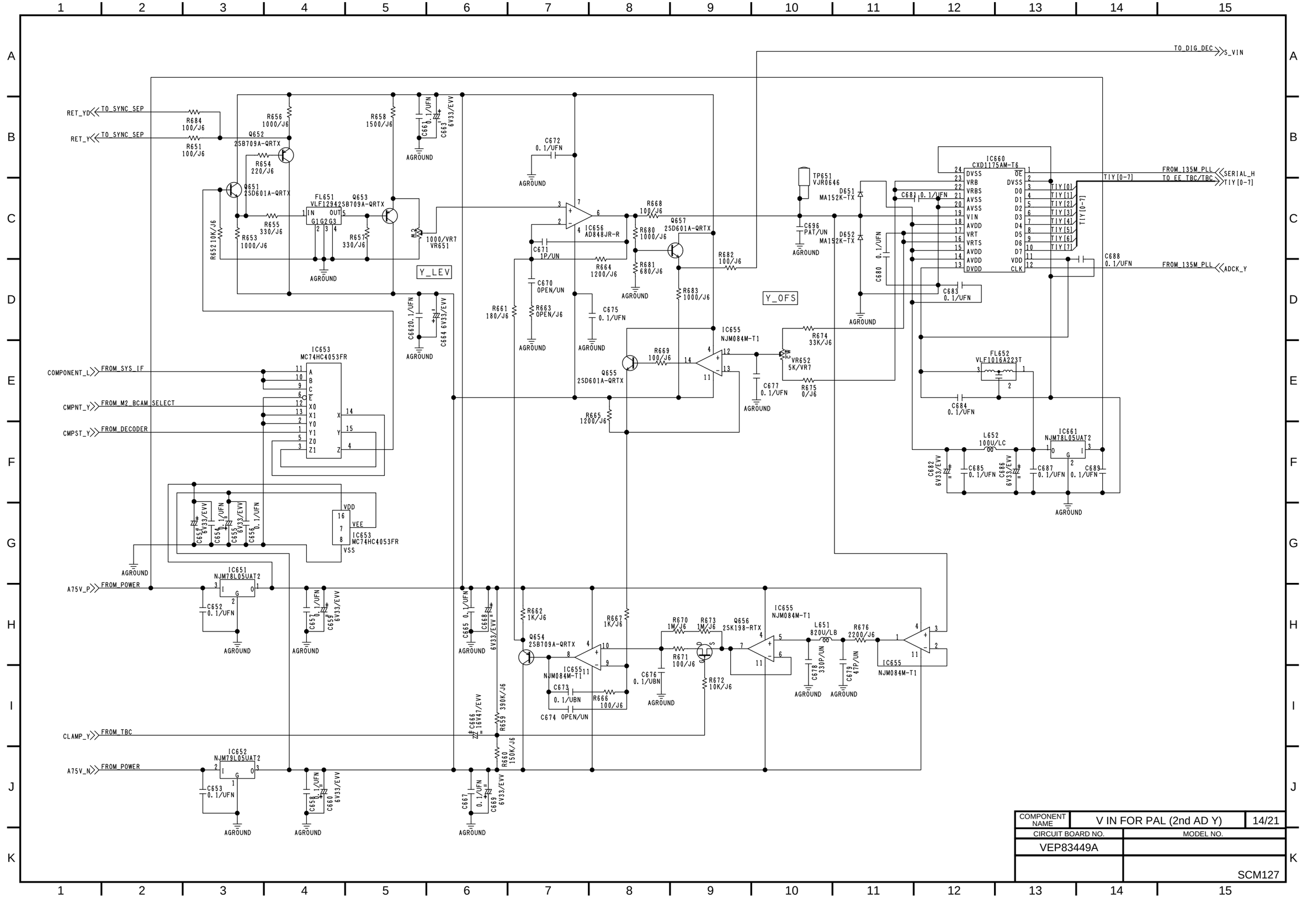

COMPONENT NAME	V IN FOR PAL (2nd AD Y)	14/21
CIRCUIT BOARD NO.	MODEL NO.	
VEP83449A		
		SCM127

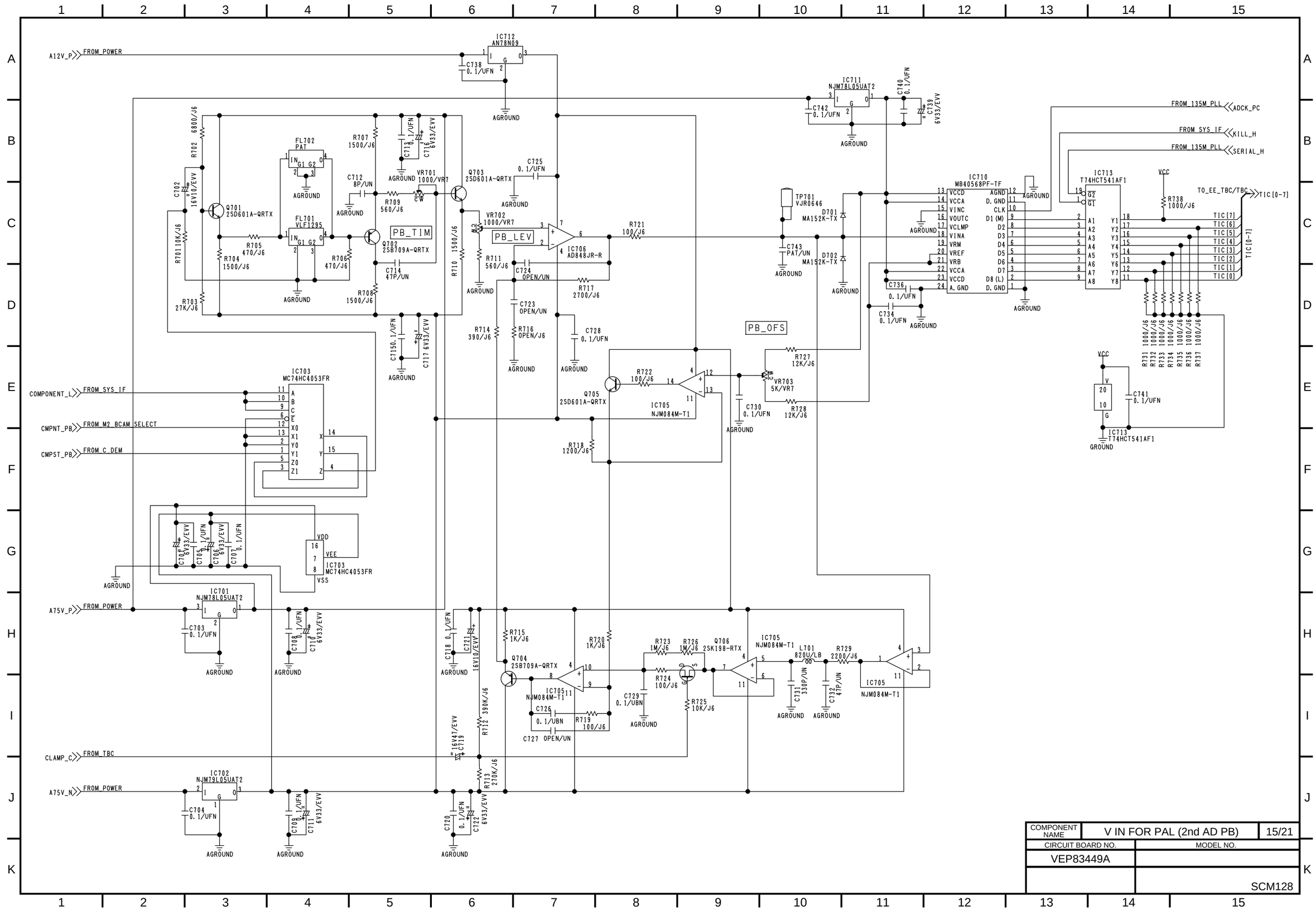

COMPONENT NAME	V IN FOR PAL (2nd AD PB)	15/21
CIRCUIT BOARD NO.	MODEL NO.	
VEP83449A		
	SCM128	

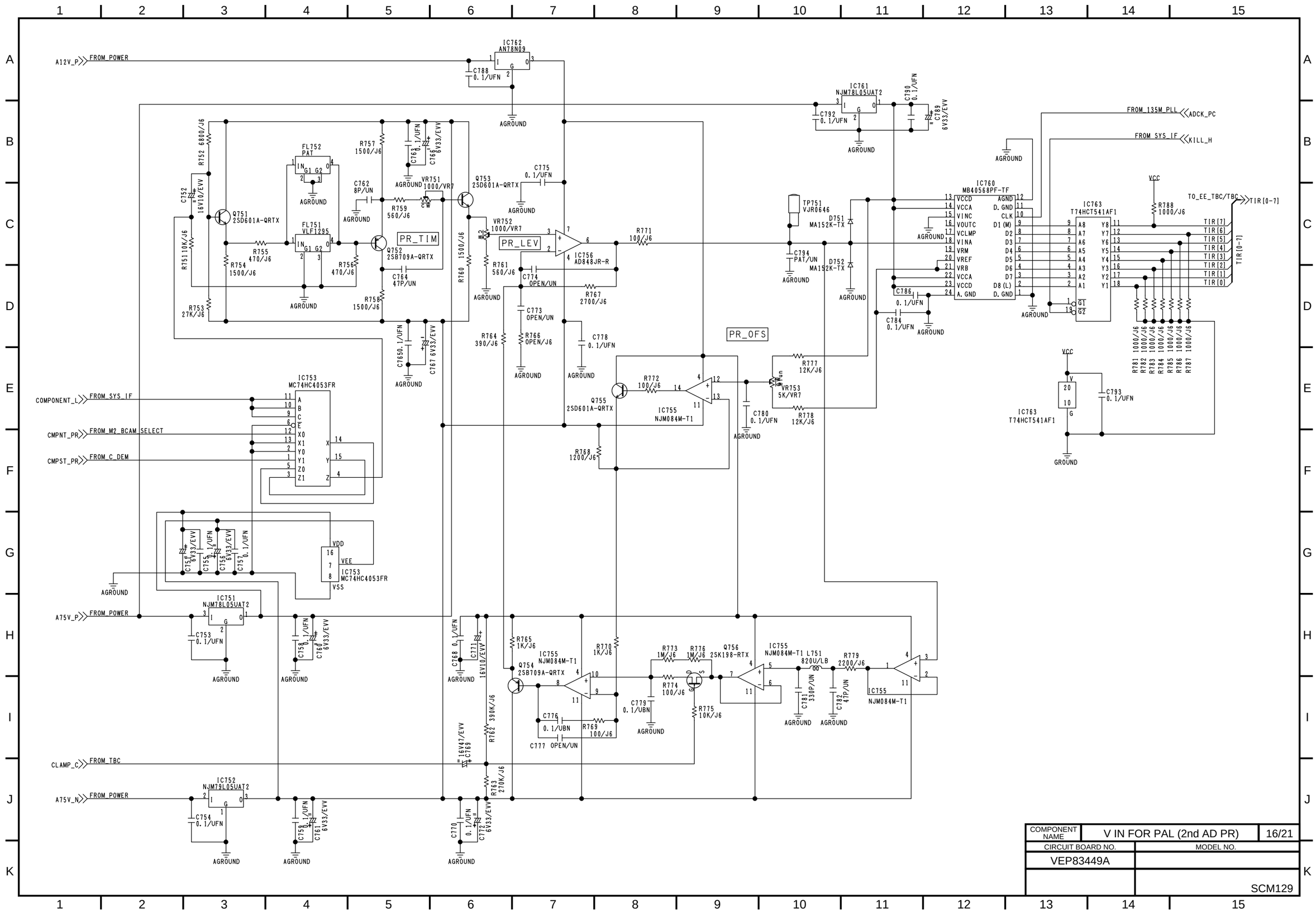

COMPONENT NAME	V IN FOR PAL (2nd AD PR)	16/21
CIRCUIT BOARD NO.	MODEL NO.	
VEP83449A		
	SCM129	

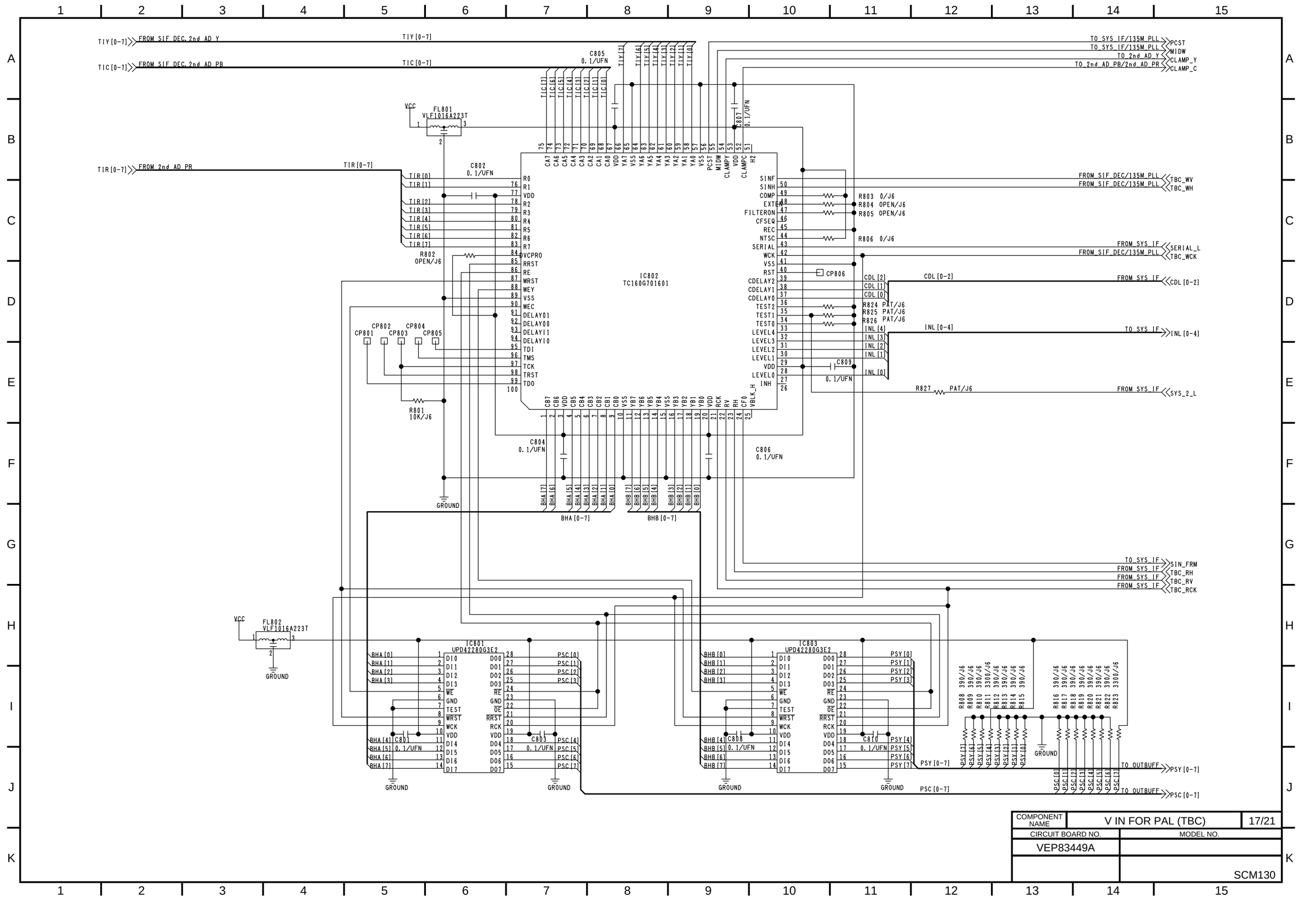

COMPONENT NAME	V IN FOR PAL (TBC)	17/21
CIRCUIT BOARD NO.	MODEL NO.	
VEP83449A		
		SCM130

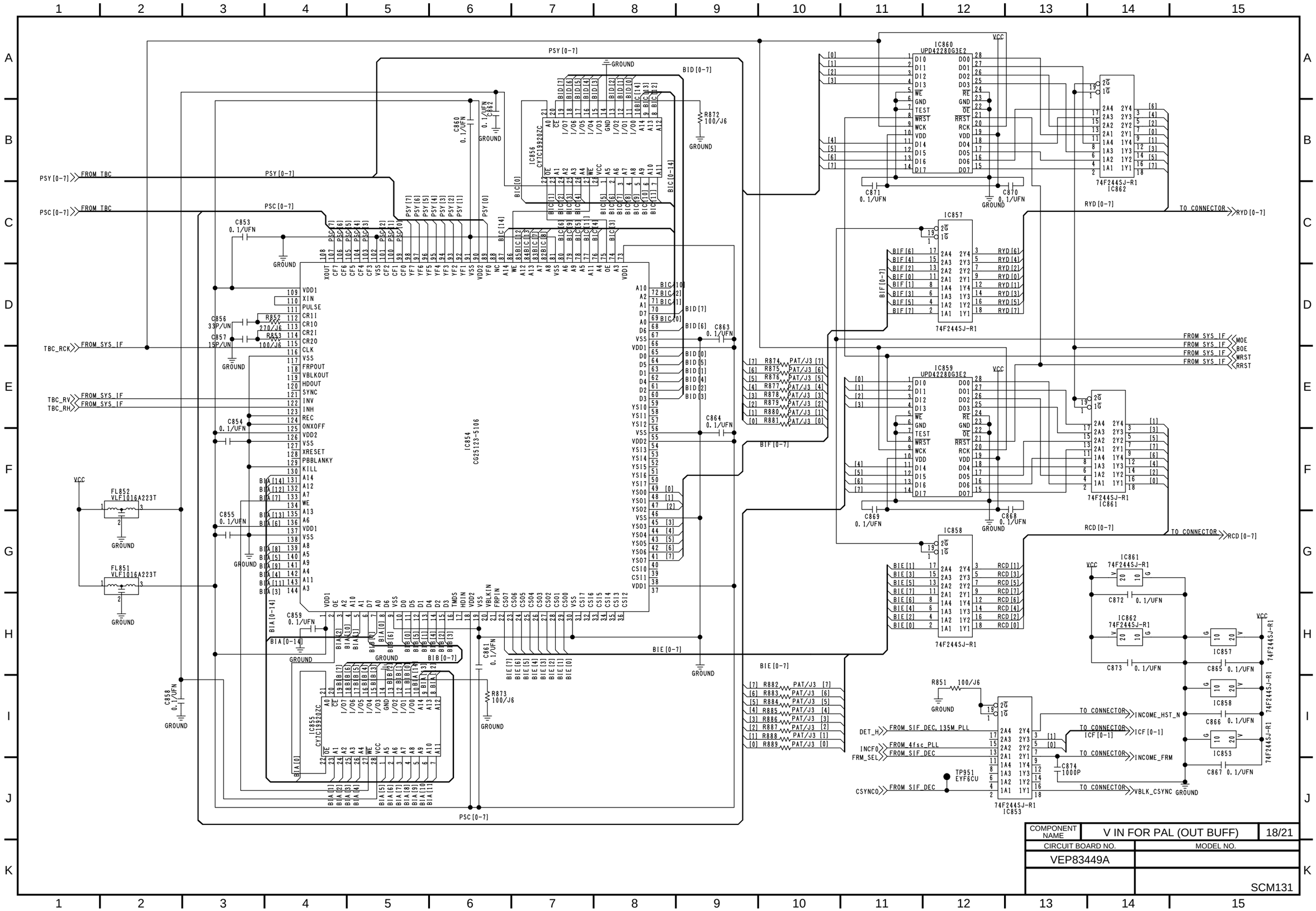

COMPONENT NAME	V IN FOR PAL (OUT BUFF)	18/21
CIRCUIT BOARD NO.	MODEL NO.	
VEP83449A		
		SCM131

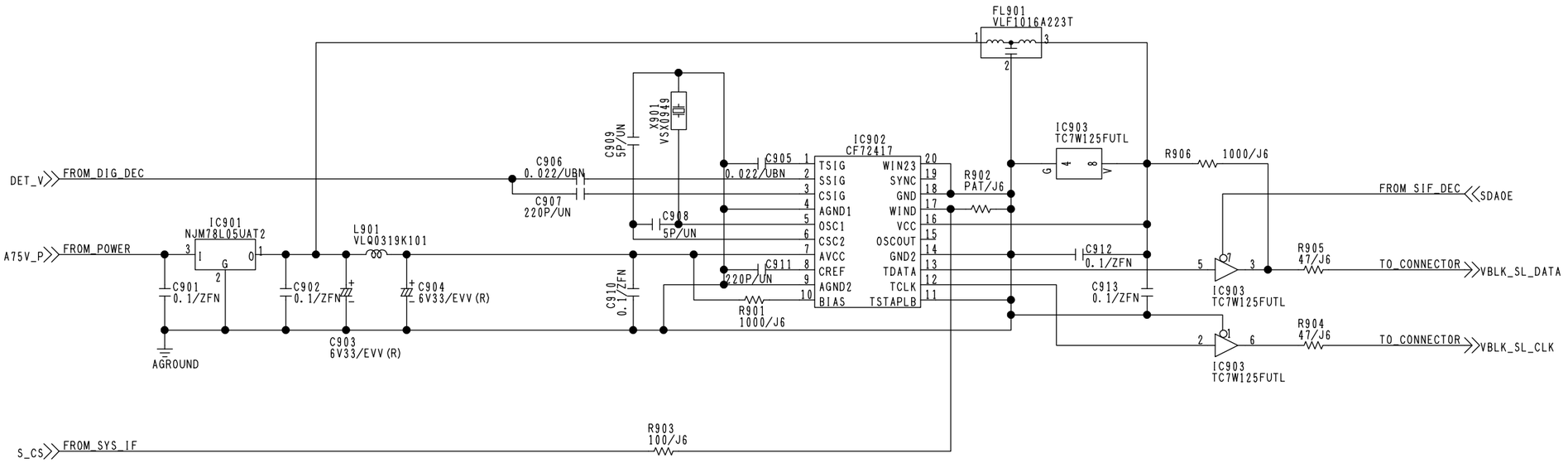

COMPONENT NAME	V IN FOR PAL (SLICER)	19/21
CIRCUIT BOARD NO.	MODEL NO.	
VEP83449A		
		SCM132

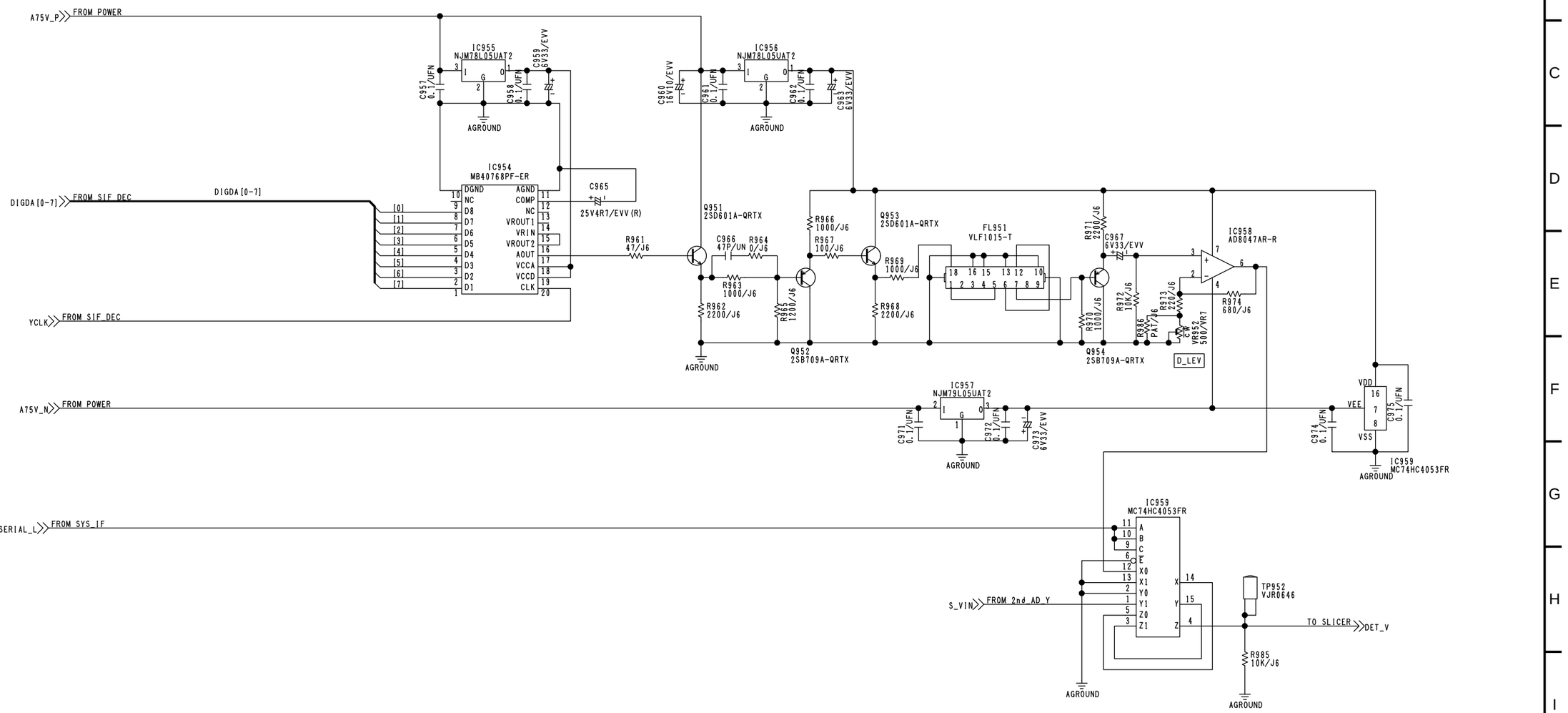

COMPONENT NAME	V IN FOR PAL (DIG DEC)	20/21
CIRCUIT BOARD NO.	MODEL NO.	
VEP83449A		
	SCM133	

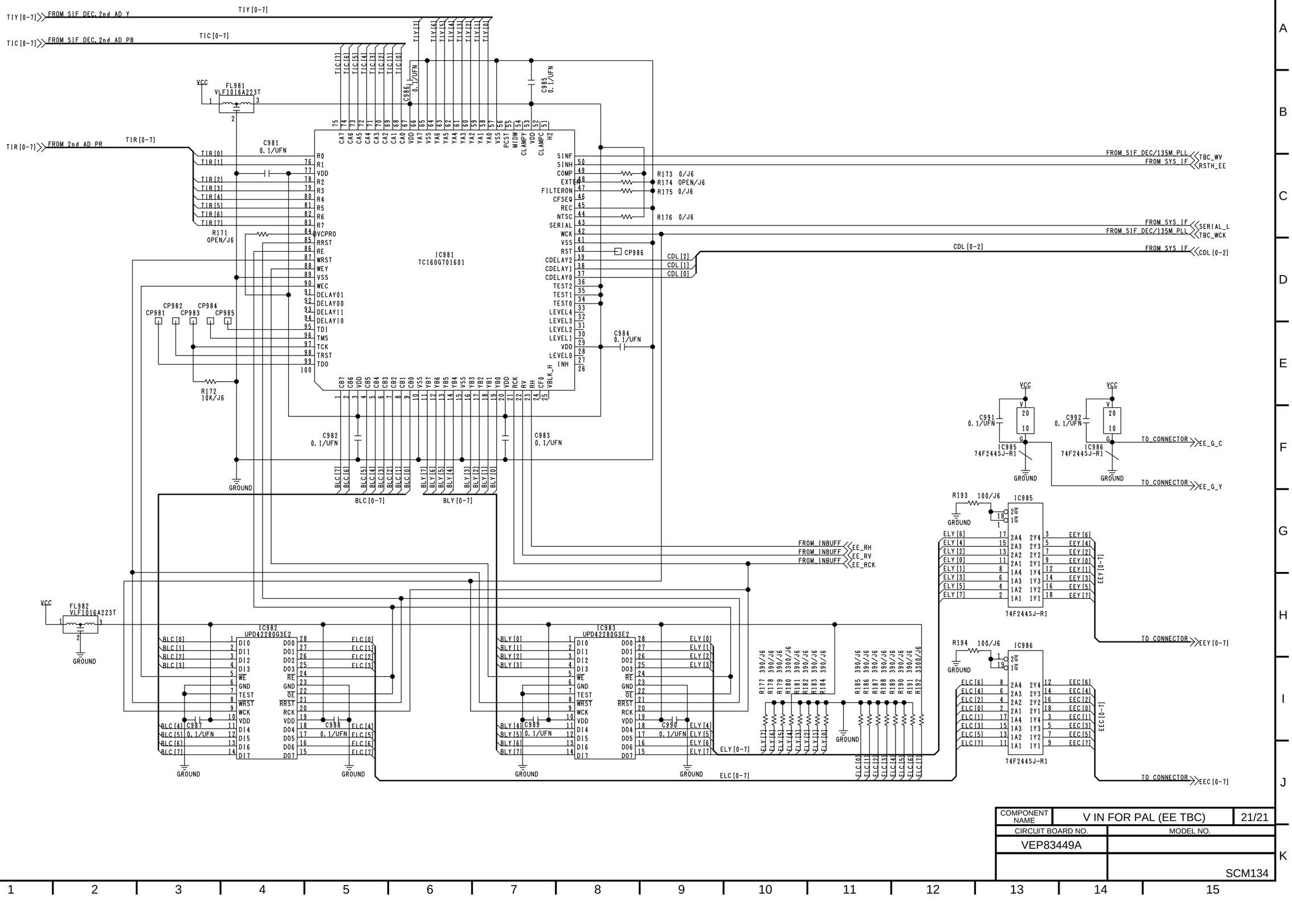

COMPONENT NAME	V IN FOR PAL (EE TBC)	21/21
CIRCUIT BOARD NO.	MODEL NO.	
VEP83449A		
		SCM134

VIDEO OVERALL BLOCK DIAGRAM

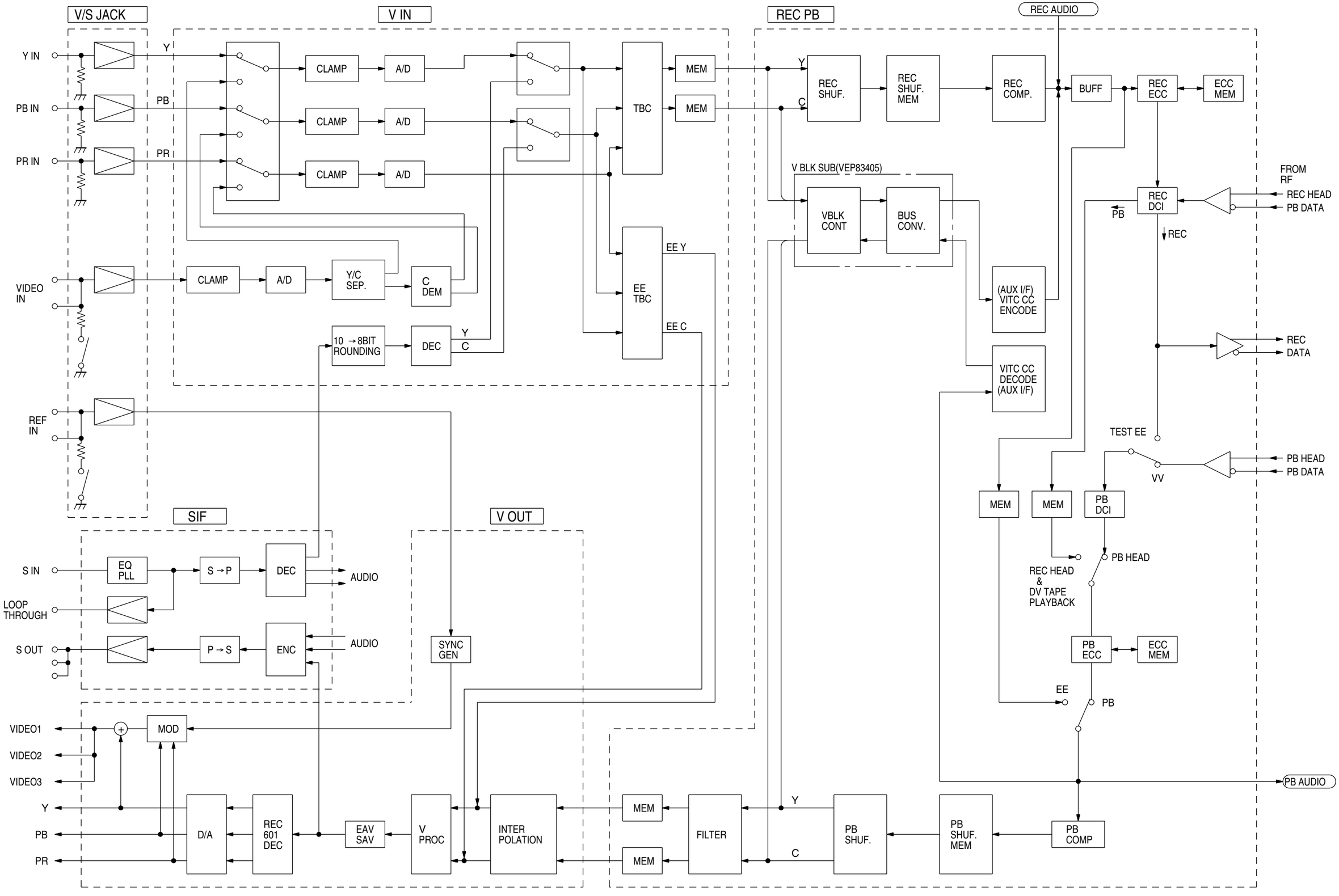

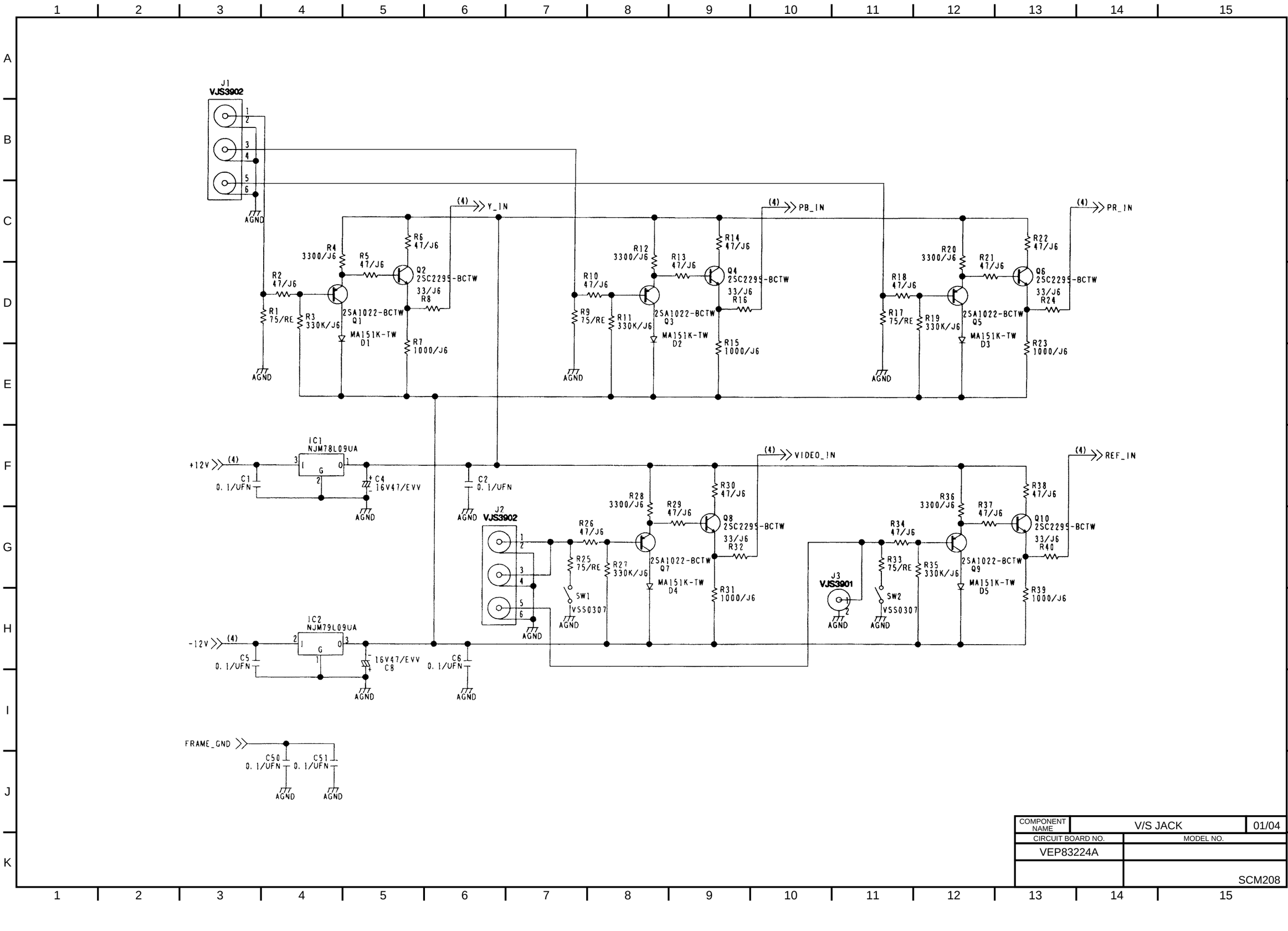

COMPONENT NAME	V/S JACK	01/04
CIRCUIT BOARD NO.	MODEL NO.	
VEP83224A		
		SCM208

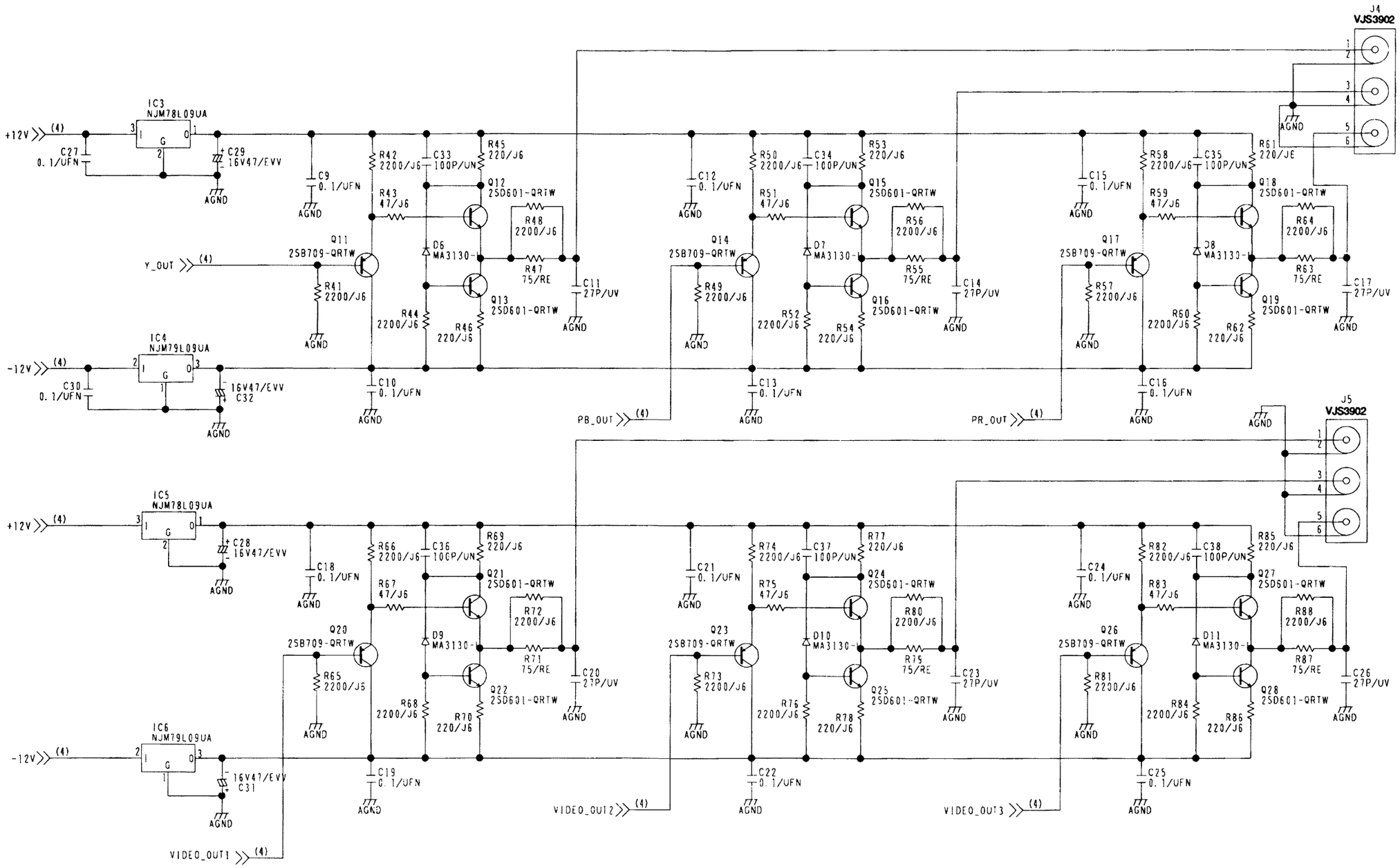

COMPONENT NAME	V/S JACK	02/04
CIRCUIT BOARD NO.	MODEL NO.	
VEP83224A		
		SCM209

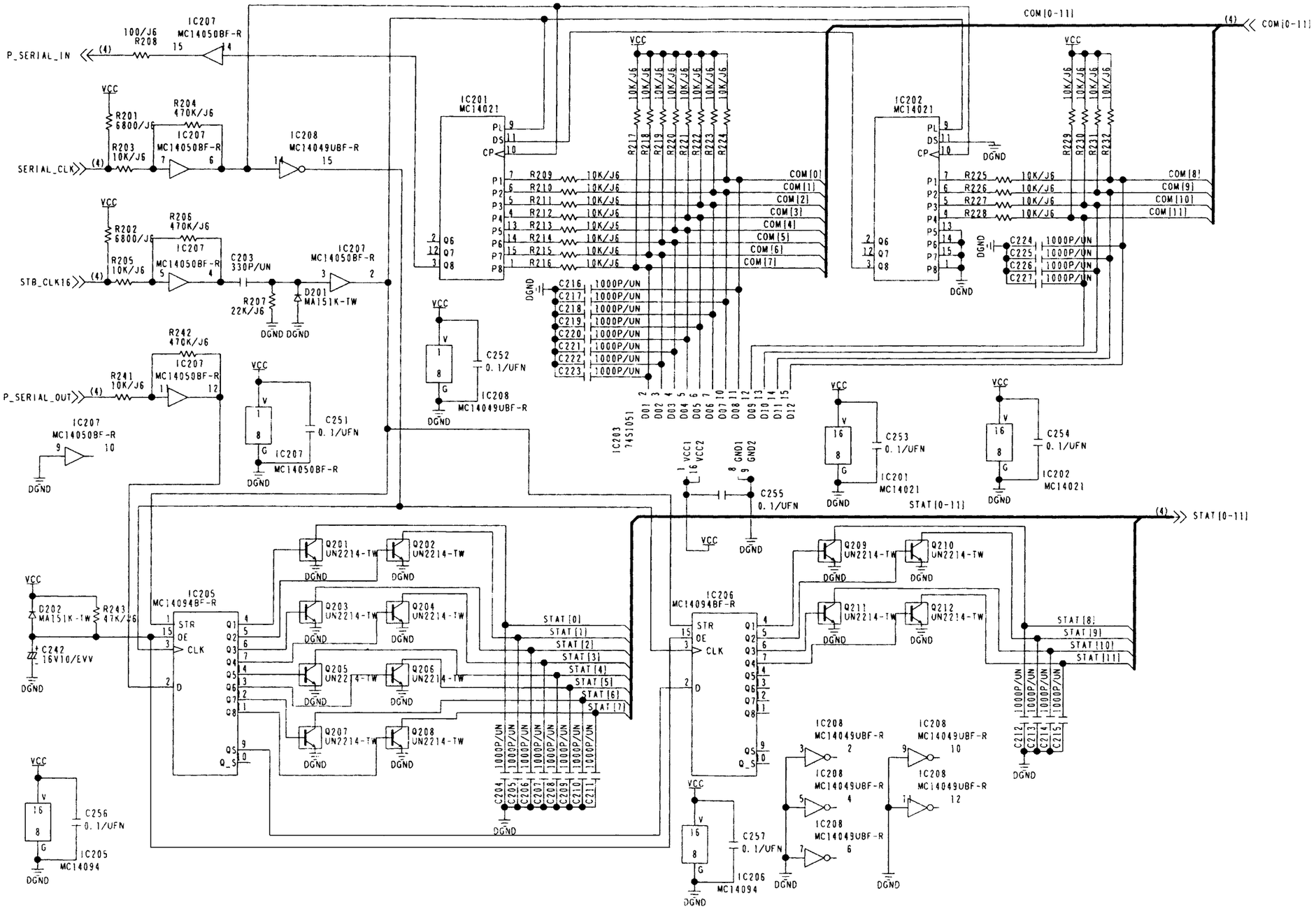

COMPONENT NAME	V/S JACK	03/04
CIRCUIT BOARD NO.	MODEL NO.	
VEP83224A		
	SCM210	

TO V/S_JACK

P1 VJP3375A060

	NO	
CTS	1 2	RTS
RXD	3 4	TXD
DSR	5 6	DTR
STB_CLK16	7 8	DCD
P_SERIAL_OUT	9 10	SERIAL_CLK
RET_GND	11 12	P_SERIAL_IN
SYS_SC_CORSE_1	13 14	SYS_SC_CORSE_2
SYS_H_PHASE	15 16	SYS_SC_PHASE
C_GAIN	17 18	HUE
VIDEO_GAIN	19 20	SET_UP
+5V	21 22	DGND
TRANSMIT_A_OUT	23 24	TRANSMIT_B_OUT
RECEIVE_A_OUT	25 26	RECEIVE_B_OUT
TRANSMIT_A_IN	27 28	TRANSMIT_B_IN
RECEIVE_A_IN	29 30	RECEIVE_B_IN
+5V	31 32	DGND
-12V	33 34	-12V
+12V	35 36	+12V
PR_OUT	37 38	AGND (PR_OUT_G)
PB_OUT	39 40	AGND (PB_OUT_G)
Y_OUT	41 42	AGND (Y_OUT_G)
VIDEO_OUT3	43 44	AGND(VIDEO_OUT3_G)
VIDEO_OUT2	45 46	AGND(VIDEO_OUT2_G)
VIDEO_OUT1	47 48	AGND(VIDEO_OUT1_G)
AGND	49 50	AGND
REF_IN	51 52	AGND (REF_IN_G)
PR_IN	53 54	AGND (PR_IN_G)
PB_IN	55 56	AGND (PB_IN_G)
Y_IN	57 58	AGND (Y_IN_G)
VIDEO_IN	59 60	AGND(VIDEO_IN_G)

VCC
VLQEL05101J
L1
C250
0.1/UFN
DGND
AGND
DGND
AGND

REMOTE IN/OUT

J14
VJP3414A009

1	DGND
2	TRANSMIT_A_IN
3	RECEIVE_B_IN
4	DGND
5	
6	DGND
7	TRANSMIT_B_IN
8	RECEIVE_A_IN
9	DGND

REMOTE OUT

J15
VJP3414A009

1	DGND
2	RECEIVE_A_OUT
3	TRANSMIT_B_OUT
4	DGND
5	
6	DGND
7	RECEIVE_B_OUT
8	TRANSMIT_A_OUT
9	DGND

ENCODER REMOTE

J16
VJP3414A016

1	
2	SET_UP
3	C_GAIN
4	DGND
5	+9V_RMT
6	SYS_H_PHASE
7	SYS_SC_CORSE_2
8	-9V_RMT
9	HUE
10	VIDEO_GAIN
11	RET_GND
12	
13	
14	SYS_SC_PHASE
15	SYS_SC_CORSE_1

+12V
IC209
NJM78L09UAT2
C251
16V10/EKA
DGND
DGND
-12V
IC210
NJM79L09UAT2
16V10/EKA
C252
DGND
DGND

RS-232C

J17
VJP3414A025

1	DGND
2	TXD
3	RXD
4	RTS
5	CTS
6	DSR
7	DGND
8	DCD
9	
10	
11	
12	
13	
14	
15	
16	
17	
18	
19	
20	DTR
21	
22	
23	
24	
25	

PARALLEL

COM[0-11] (3)
COM[11]
R250
PAT/J6
STAT[0-11] (3)
STAT[11]
R251
0/J6
+12V
@ex.p
C243
16V47/EVV
C244
0.1/UFN
ERG12HJ2R7
R244
DGND
DGND

J18
VJP3414A025

1	COM[0]
2	COM[1]
3	COM[2]
4	COM[3]
5	COM[4]
6	COM[5]
7	COM[6]
8	COM[7]
9	COM[8]
10	COM[9]
11	COM[10]
12	+12V_FOR_P
13	STAT[0]
14	STAT[1]
15	STAT[2]
16	STAT[3]
17	STAT[4]
18	STAT[5]
19	STAT[6]
20	STAT[7]
21	STAT[8]
22	STAT[9]
23	STAT[10]
24	SPARE
25	DGND

R252 0/J6
R253 0/J6
R254 0/J6
R255 0/J6

COMPONENT NAME	V/S JACK	04/04
CIRCUIT BOARD NO.	MODEL NO.	
VEP83224A		
	SCM211	

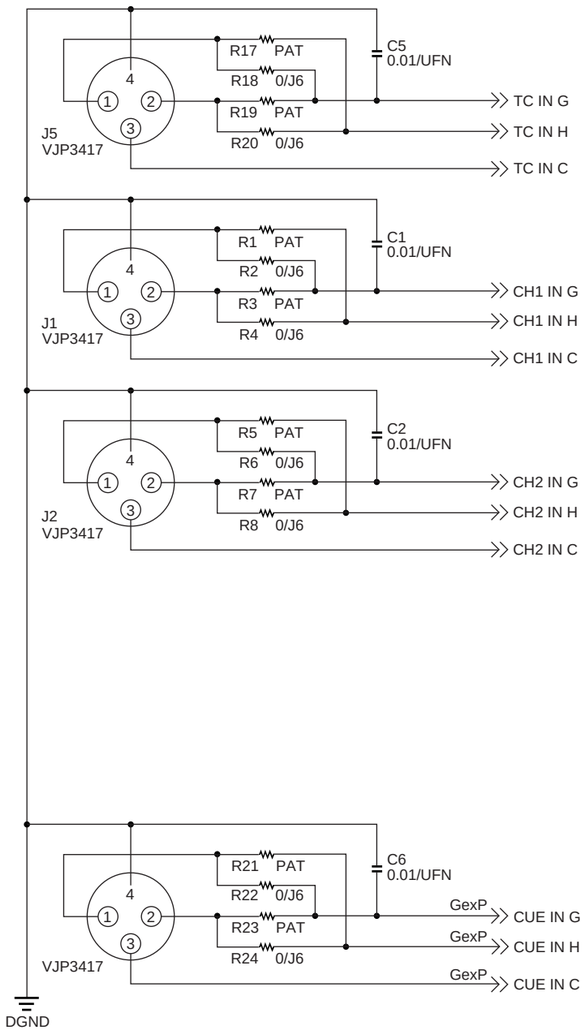

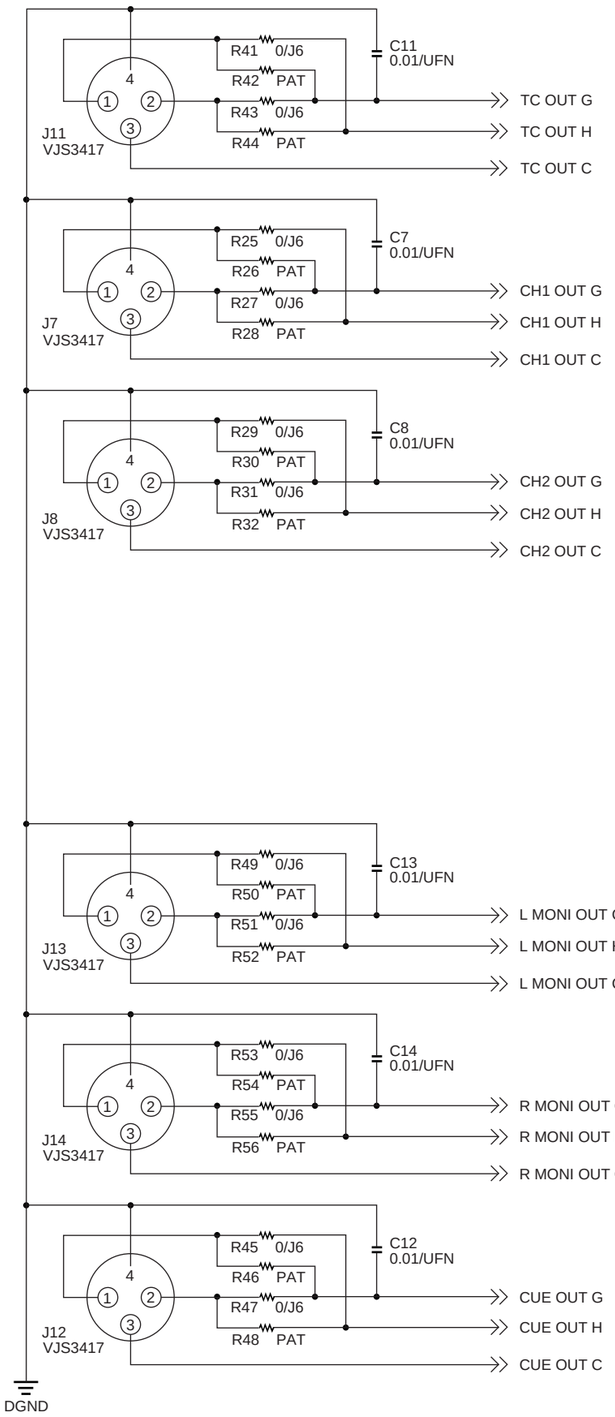

P1 VJP3375A060

	NO.		
+12V	1	2	+12V
–12V	3	4	–12V
TC OUT G	5	6	TC OUT G
TC OUT C	7	8	TC OUT H
TC IN G	9	10	TC IN G
TC IN C	11	12	TC IN H
R MONI OUT G	13	14	R MONI OUT G
R MONI OUT C	15	16	R MONI OUT H
L MONI OUT G	17	18	L MONI OUT G
L MONI OUT C	19	20	L MONI OUT H
CH2 OUT G	21	22	CH2 OUT G
CH2 OUT C	23	24	CH2 OUT H
CH1 OUT G	25	26	CH1 OUT G
CH1 OUT C	27	28	CH1 OUT H
CH2 IN G	29	30	CH2 IN G
CH2 IN C	31	32	CH2 IN H
CH1 IN G	33	34	CH1 IN G
CH1 IN C	35	36	CH1 IN H
4P C OUT G	37	38	4P C OUT G
WIDE OUT L	39	40	4P C OUT
4P Y OUT G	41	42	4P Y OUT G
	43	44	4P Y OUT
4P C IN G	45	46	4P C IN G
WIDE IN L	47	48	4P C IN
4P Y IN G	49	50	4P Y IN G
	51	52	4P Y IN
CEU OUT G	53	54	CEU OUT G
CUE OUT C	55	56	CUE OUT H
CUE IN G	57	58	CUE IN G
CUE IN C	59	60	CUE IN H

(2) (2) (2) (2) (2) (2)

P3
OPTION (VJP1243T)

1	L MONI OUT H
2	R MONI OUT H
3	L MONI OUT G

COMPONENT NAME	A JACK	01/02
CIRCUIT BOARD NO.	MODEL NO.	
JAPAN:VEP84183B		
EX.JAPAN:VEP84183A		SCM219

All this page is the option (Y/C INPUT/OUTPUT).

このページは、すべてオプション(Y/C入出力)

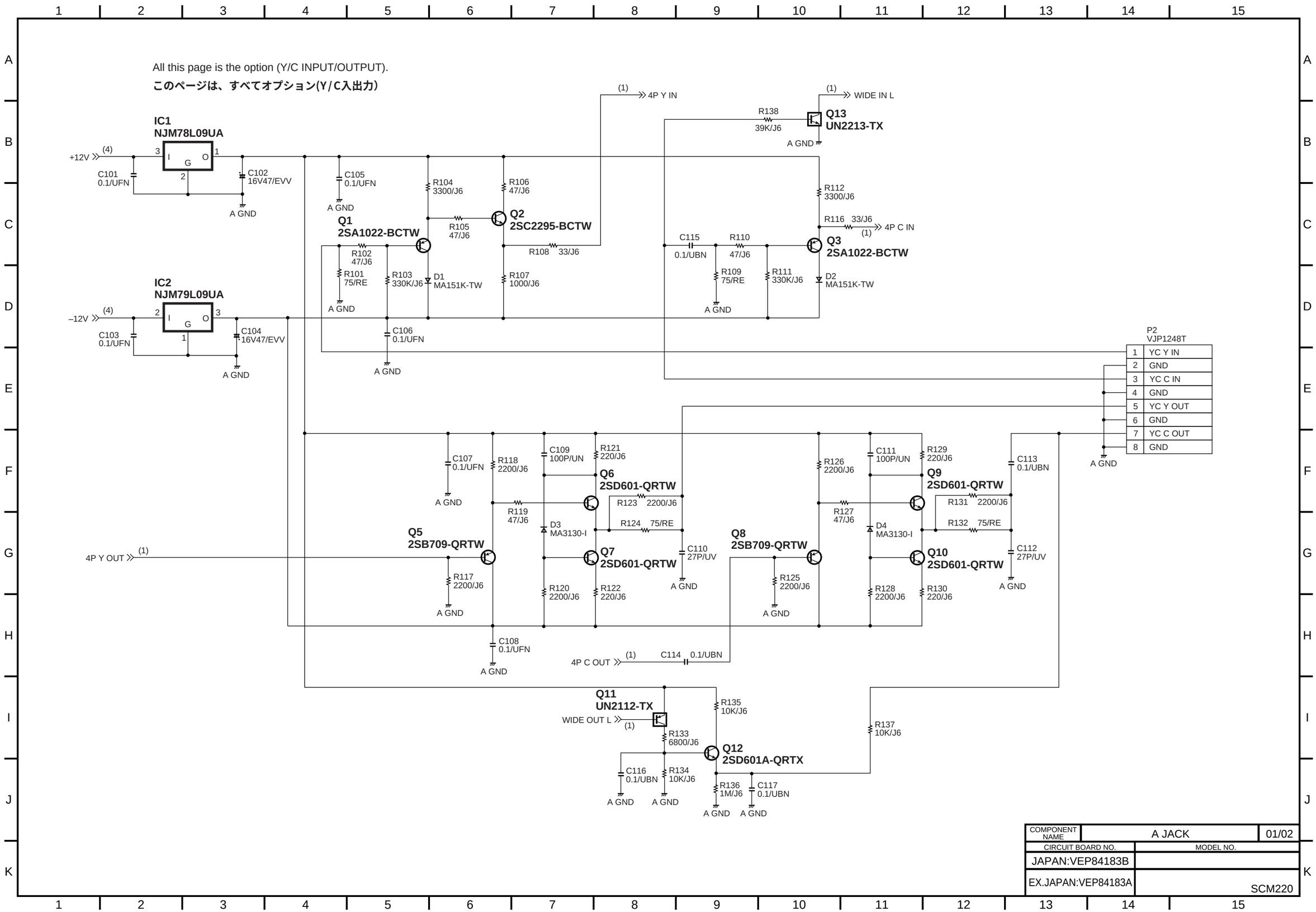

COMPONENT NAME	A JACK	01/02
CIRCUIT BOARD NO.	MODEL NO.	
JAPAN:VEP84183B		
EX.JAPAN:VEP84183A	SCM220	

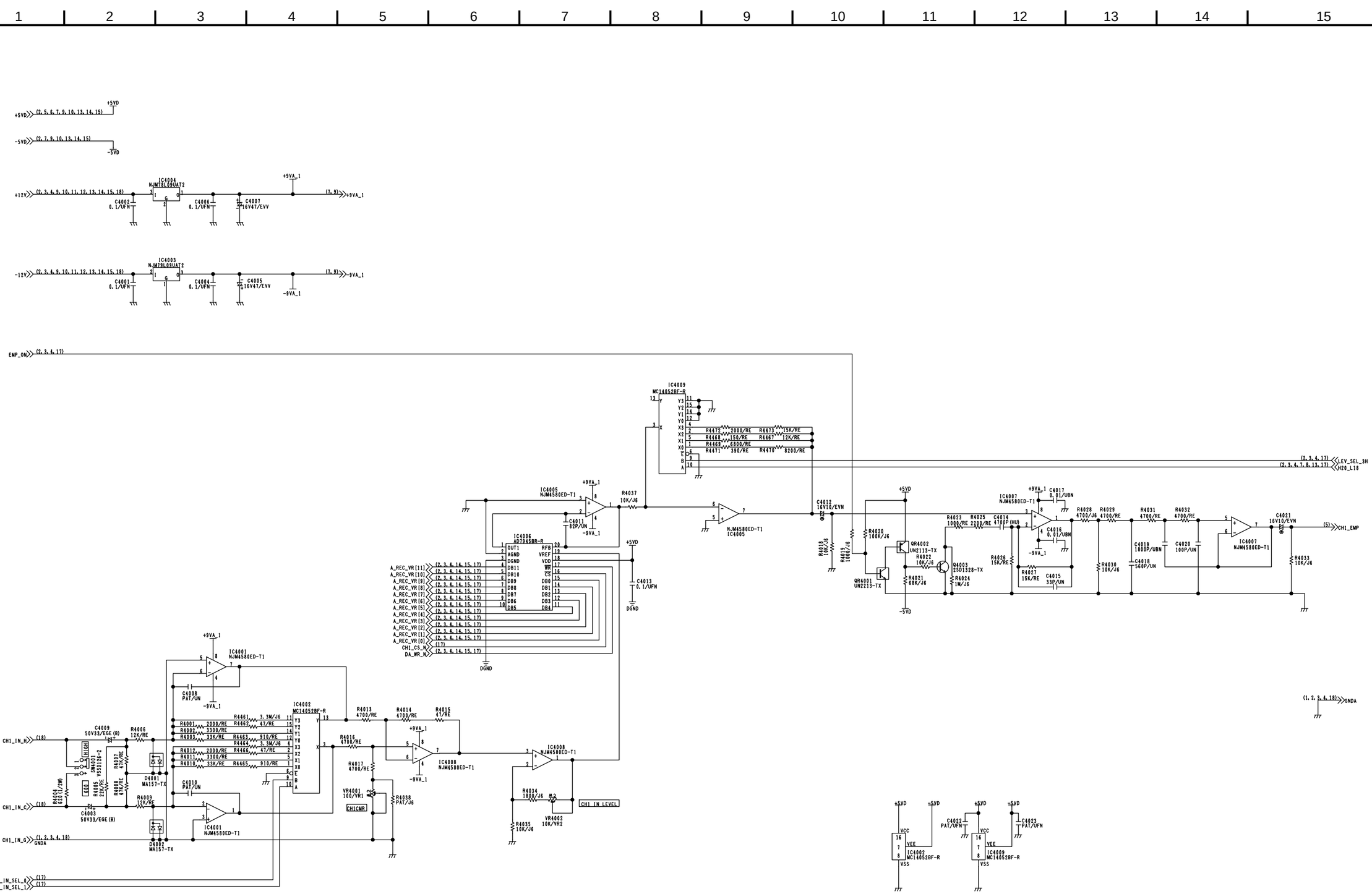
+5VD
-5VD
+12V
-12V
IC4004 NJM78L09UAT2
IC4003 NJM79L09UAT2
C4002 0.1/UFN
C4006 0.1/UFN
C4007 16V47/EVV
C4001 0.1/UFN
C4004 0.1/UFN
C4005 16V47/EVV
+9VA_1
-9VA_1
EMP_ON
IC4009 MC14052BF-R
R4472 2000/RE
R4468 150/RE
R4469 680Ω/RE
R4471 390/RE
R4473 15K/RE
R4467 12K/RE
R4470 820Ω/RE
LEV_SEL_3H
H20_L18
IC4005 NJM4580ED-T1
R4037 10K/J6
C4011 82P/UN
IC4006 AD7245BR-R
A_REC_VR[11]
A_REC_VR[10]
A_REC_VR[9]
A_REC_VR[8]
A_REC_VR[7]
A_REC_VR[6]
A_REC_VR[5]
A_REC_VR[4]
A_REC_VR[3]
A_REC_VR[2]
A_REC_VR[1]
A_REC_VR[0]
CH1_CS_N
DA_WR_N
C4013 0.1/UFN
DGND
NJM4580ED-T1
IC4005
C4012 16V10/EVN
R4020 100K/J6
R4019 100Ω/J6
R4018 10K/J6
QR4002 UN2113-TX
R4022 10K/J6
R4021 68K/J6
QR4001 UN2213-TX
Q4003 2SD1328-TX
R4024 1W/J6
R4023 100Ω/RE
R4025 2200/RE
C4014 4700P (HU)
IC4007 NJM4580ED-T1
C4017 0.01/UBN
C4016 0.01/UBN
R4026 15K/RE
R4027 15K/RE
C4015 33P/UN
R4028 4700/J6
R4029 4700/RE
R4030 10K/J6
R4031 4700/RE
R4032 4700/RE
C4018 1800P/UBN
C4018 560P/UN
C4020 100P/UN
IC4007 NJM4580ED-T1
C4021 16V10/EVN
R4033 10K/J6
(G)
CH1_EMP
(1, 2, 3, 4, 18)
GNDA
IC4001 NJM4580ED-T1
C4008 PAT/UN
IC4002 MC14052BF-R
R4001 2000/RE
R4002 3300/RE
R4003 33K/RE
R4012 2000/RE
R4011 3300/RE
R4010 33K/RE
R4461 3.3M/J6
R4463 910/RE
R4464 3.3M/J6
R4462 47/RE
R4465 910/RE
R4013 4700/RE
R4014 4700/RE
R4015 47/RE
R4016 4700/RE
R4017 4700/RE
IC4008 NJM4580ED-T1
R4034 1800/J6
R4035 10K/J6
VR4002 10K/VR2
VR4001 100/VR1
CH1CMR
R4038 PAT/J6
CH1 IN LEVEL
C4009 50V33/EGE(B)
R4006 12K/RE
R4007 47K/RE
R4004 620Ω(1/4W)
R4005 22K/RE
R4008 47K/RE
R4009 12K/RE
C4003 50V33/EGE(B)
D4001 MA157-TX
D4002 MA157-TX
C4010 PAT/UN
IC4001 NJM4580ED-T1
CH1_IN_H
CH1_IN_C
CH1_IN_G
CH1_IN_SEL_0
CH1_IN_SEL_1
(17)
(18)
IC4003 MC14052BF-R
IC4002 MC14052BF-R
C4022 PAT/UFN
C4023 PAT/UFN
VCC
VEE
VSS
Ref No4000 Series (4000-4040)
R(4461-4475)
COMPONENT NAME
A ADDA (CH 1 INPUT)
01/18
CIRCUIT BOARD NO.
MODEL NO.
VEP84301B
SCM156

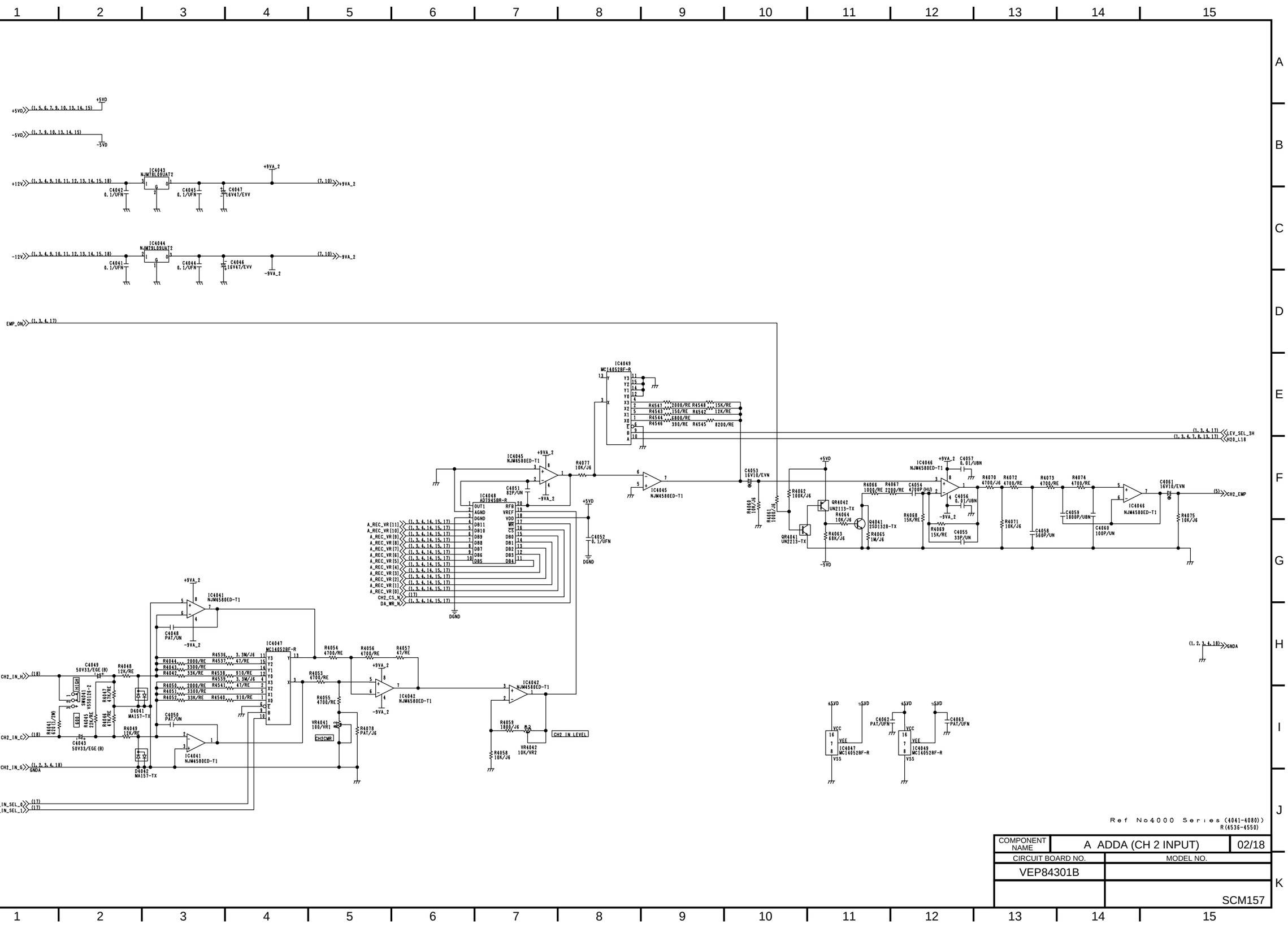

Ref No4000 Series (4041-4080)
R(4536-4550)

COMPONENT NAME	A ADDA (CH 2 INPUT)	02/18
CIRCUIT BOARD NO.	MODEL NO.	
VEP84301B		
		SCM157

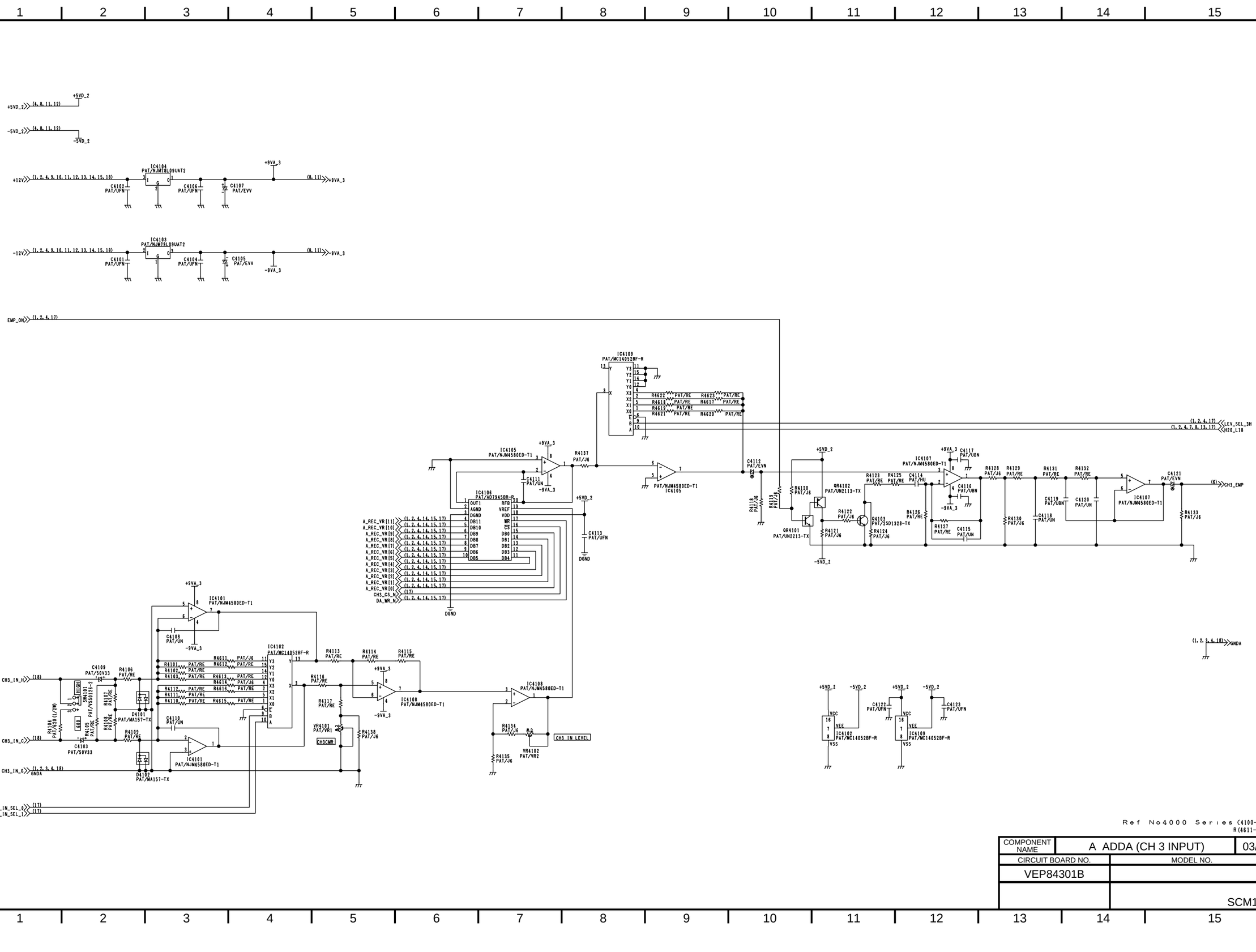

Ref No4000 Series (4100-4140)
R(4611-4475)

COMPONENT NAME	A ADDA (CH 3 INPUT)	03/18
CIRCUIT BOARD NO.	MODEL NO.	
VEP84301B		
	SCM158	

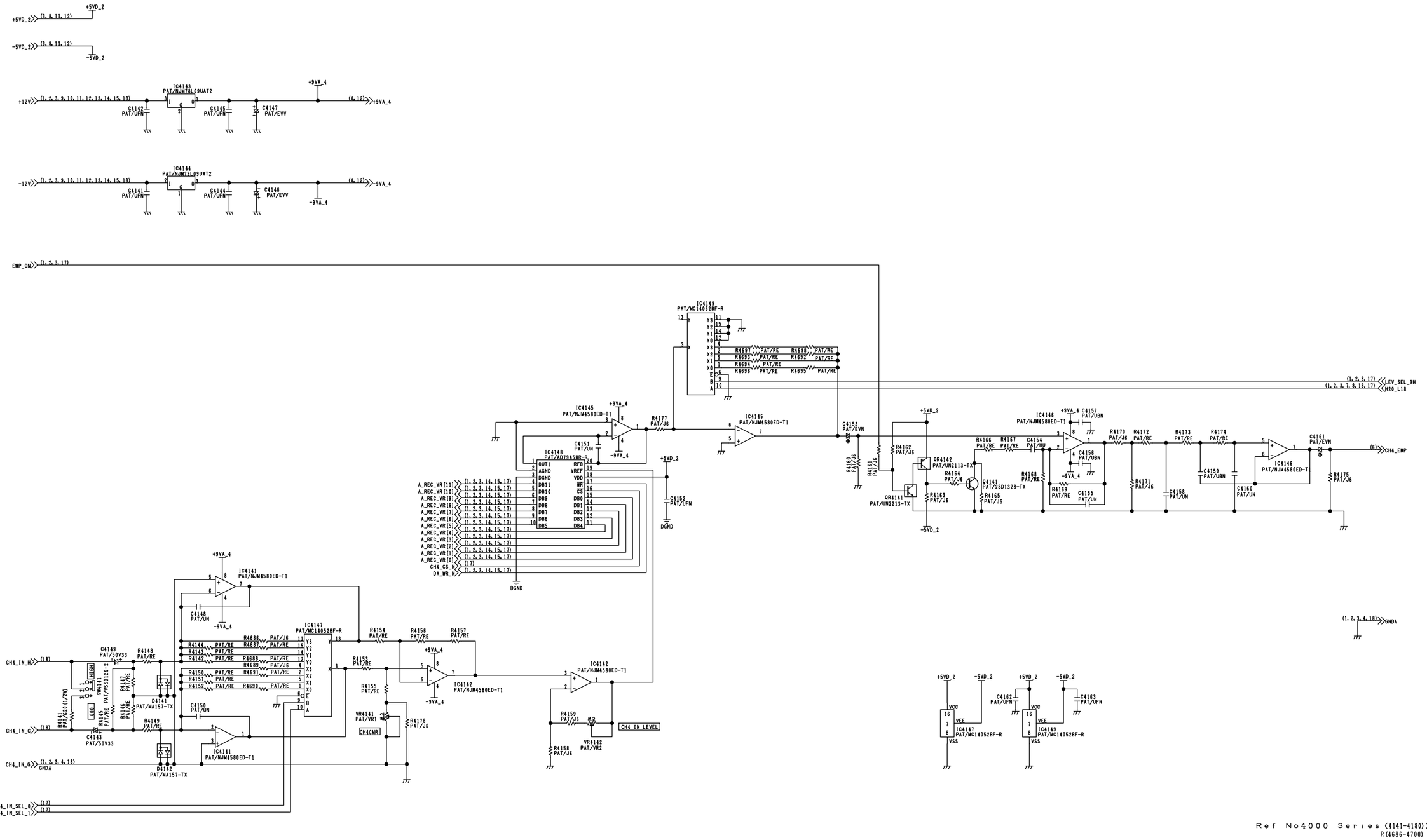

Ref No4000 Series (4141-4180)
R(4686-4700)

COMPONENT NAME	A ADDA (CH 4 INPUT)	04/18
CIRCUIT BOARD NO.	MODEL NO.	
VEP84301B		
		SCM159

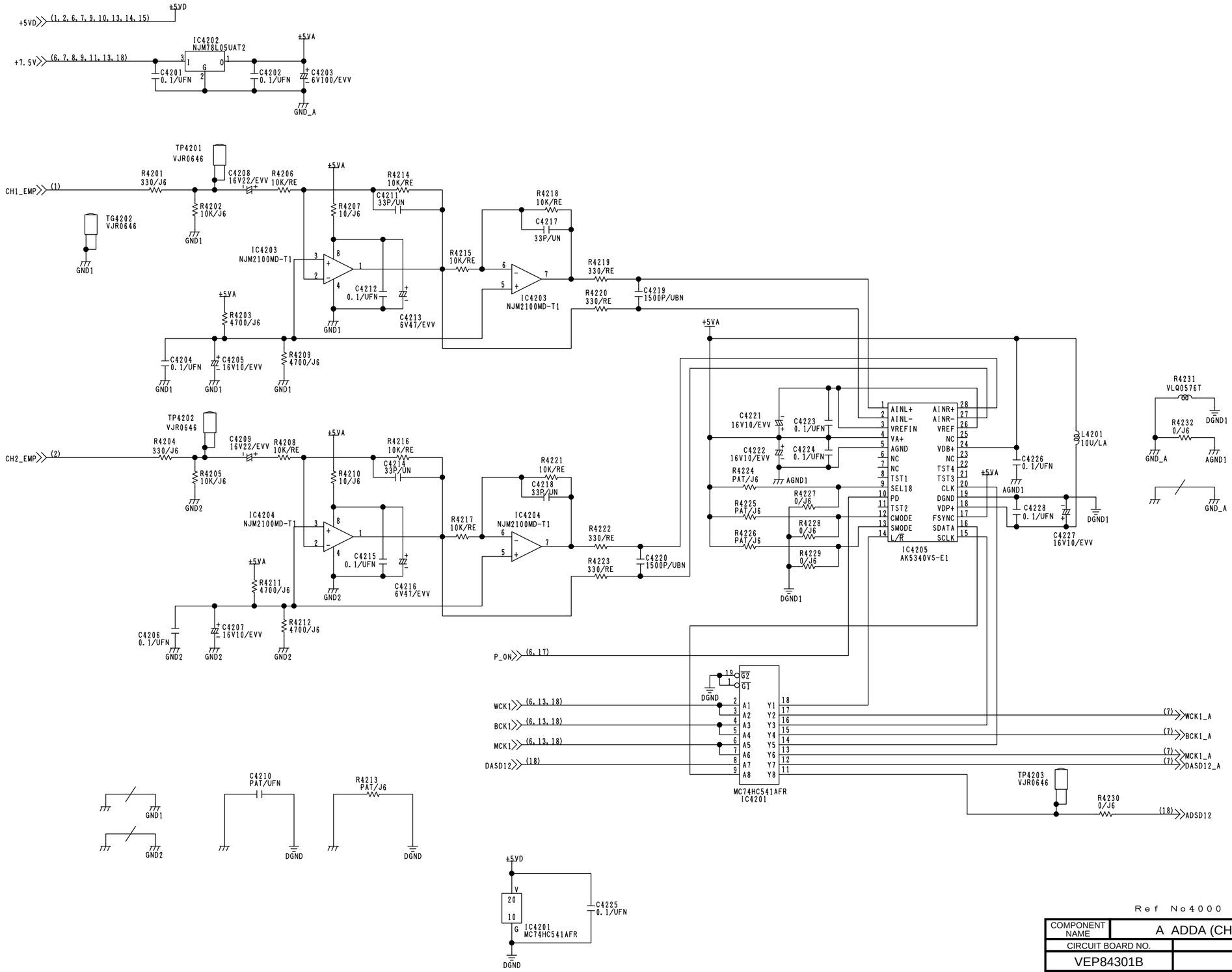

Ref No4000 Series (4201-4250)

COMPONENT NAME	A ADDA (CH 12 AD)	05/18
CIRCUIT BOARD NO.	MODEL NO.	
VEP84301B		
	SCM160	

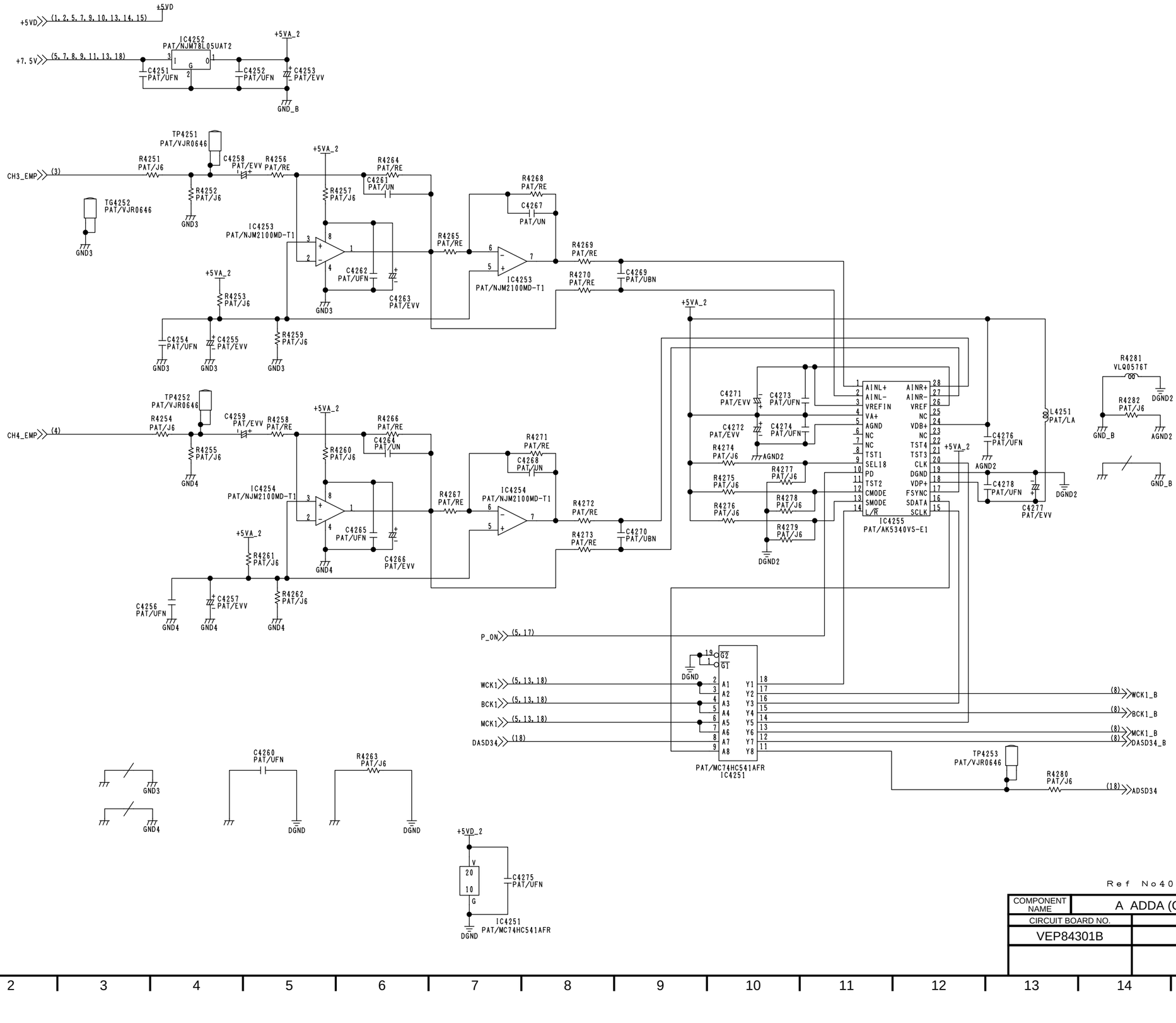

Ref No4000 Series (4251-4300)

COMPONENT NAME	A ADDA (CH 34 AD)	06/18
CIRCUIT BOARD NO.	MODEL NO.	
VEP84301B		
	SCM161	

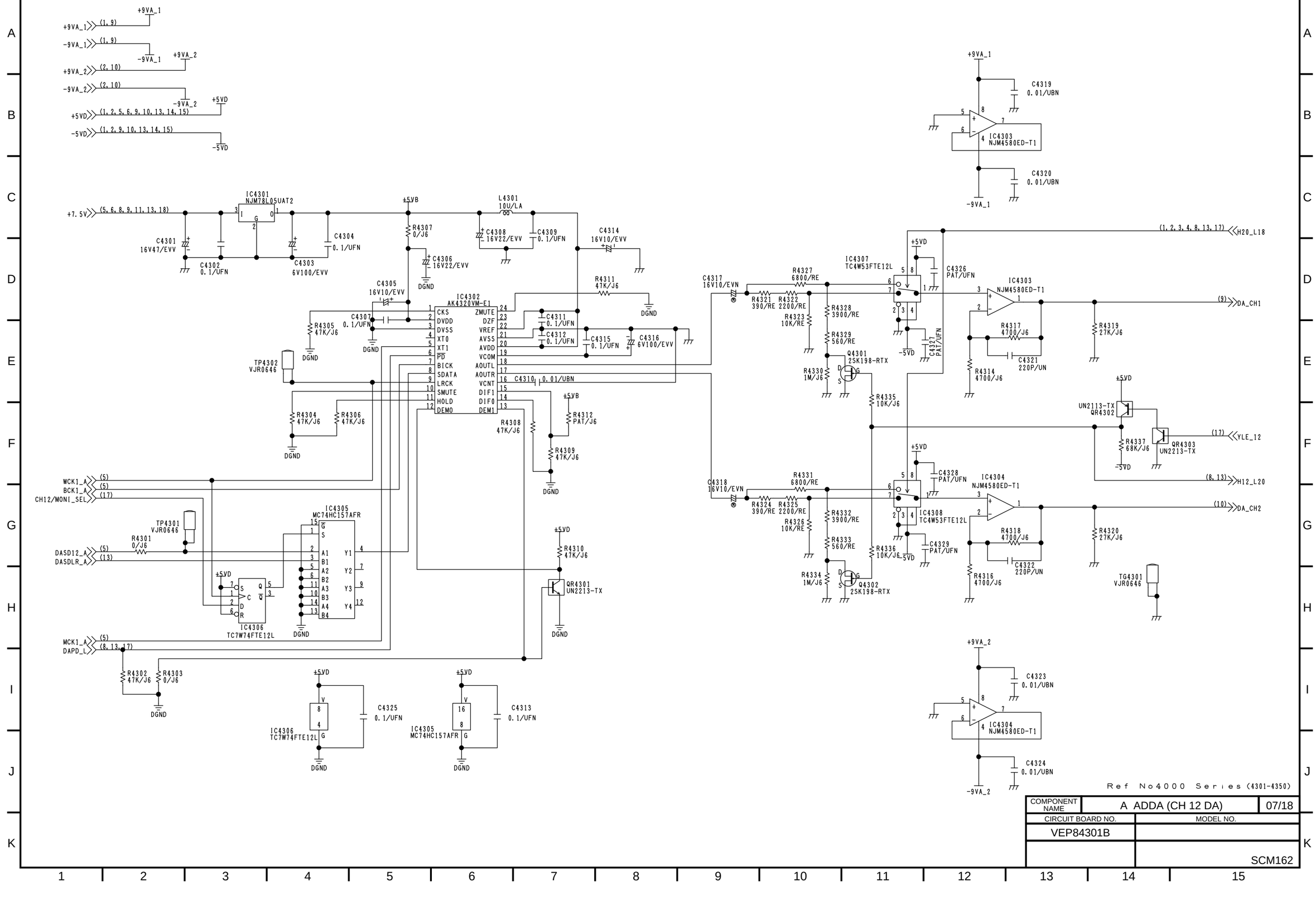

Ref No4000 Series (4301-4350)

COMPONENT NAME	A ADDA (CH 12 DA)	07/18
CIRCUIT BOARD NO.	MODEL NO.	
VEP84301B		
	SCM162	

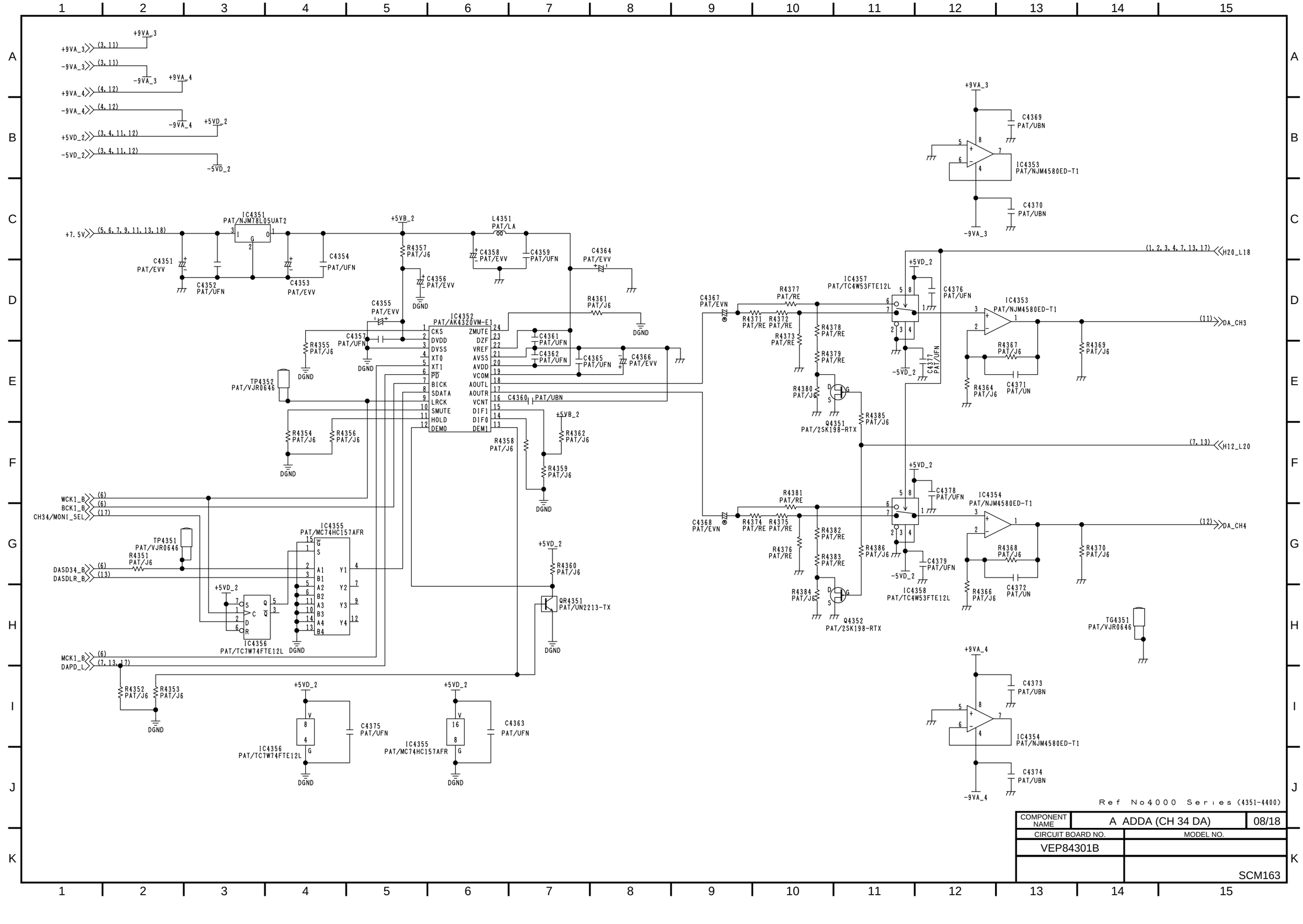
+9VA_3
(3, 11)
-9VA_3
+9VA_4
(4, 12)
-9VA_4
+5VD_2
(3, 4, 11, 12)
-5VD_2
+7.5V
(5, 6, 7, 9, 11, 13, 18)
IC4351
PAT/NJM78L05UAT2
C4351
PAT/EVV
C4352
PAT/UFN
C4353
PAT/EVV
C4354
PAT/UFN
+5VB_2
R4357
PAT/J6
C4356
PAT/EVV
DGND
L4351
PAT/LA
C4358
PAT/EVV
C4359
PAT/UFN
C4364
PAT/EVV
R4361
PAT/J6
C4355
PAT/EVV
C4357
PAT/UFN
R4355
PAT/J6
IC4352
PAT/AK4320VM-E1
CKS
DVDD
DVSS
XT0
XT1
PD
BICK
SDATA
LRCK
SMUTE
HOLD
DEMO
ZMUTE
DZF
VREF
AVSS
AVDD
VCOM
AOUTL
AOUTR
VCNT
DIF1
DIF0
DEM1
C4361
PAT/UFN
C4362
PAT/UFN
C4365
PAT/UFN
C4366
PAT/EVV
C4360
PAT/UBN
TP4352
PAT/VJR0646
R4354
PAT/J6
R4356
PAT/J6
R4358
PAT/J6
+5VB_2
R4362
PAT/J6
R4359
PAT/J6
WCK1_B
BCK1_B
CH34/MONI_SEL
(6)
(17)
TP4351
PAT/VJR0646
R4351
PAT/J6
DASD34_B
DASDLR_B
(13)
IC4355
PAT/MC74HC157AFR
IC4356
PAT/TC7W74FTE12L
+5VD_2
+5VB_2
R4360
PAT/J6
QR4351
PAT/UN2213-TX
MCK1_B
DAPD_L
(7, 13, 17)
R4352
PAT/J6
R4353
PAT/J6
C4375
PAT/UFN
C4363
PAT/UFN
+9VA_3
C4369
PAT/UBN
IC4353
PAT/NJM4580ED-T1
C4370
PAT/UBN
-9VA_3
(1, 2, 3, 4, 7, 13, 17)
H20_L18
C4367
PAT/EVN
R4377
PAT/RE
R4371
PAT/RE
R4372
PAT/RE
IC4357
PAT/TC4W53FTE12L
C4376
PAT/UFN
R4373
PAT/RE
R4378
PAT/RE
R4379
PAT/RE
C4377
PAT/UFN
(11)
DA_CH3
R4367
PAT/J6
R4369
PAT/J6
R4364
PAT/J6
C4371
PAT/UN
R4380
PAT/J6
Q4351
PAT/2SK198-RTX
R4385
PAT/J6
(7, 13)
H12_L20
C4368
PAT/EVN
R4381
PAT/RE
R4374
PAT/RE
R4375
PAT/RE
C4378
PAT/UFN
IC4354
PAT/NJM4580ED-T1
R4376
PAT/RE
R4382
PAT/RE
R4383
PAT/RE
R4386
PAT/J6
C4379
PAT/UFN
(12)
DA_CH4
R4368
PAT/J6
R4370
PAT/J6
R4366
PAT/J6
C4372
PAT/UN
R4384
PAT/J6
Q4352
PAT/2SK198-RTX
IC4358
PAT/TC4W53FTE12L
TG4351
PAT/VJR0646
C4373
PAT/UBN
C4374
PAT/UBN
Ref No4000 Series (4351-4400)
COMPONENT NAME
A ADDA (CH 34 DA)
08/18
CIRCUIT BOARD NO.
MODEL NO.
VEP84301B
SCM163

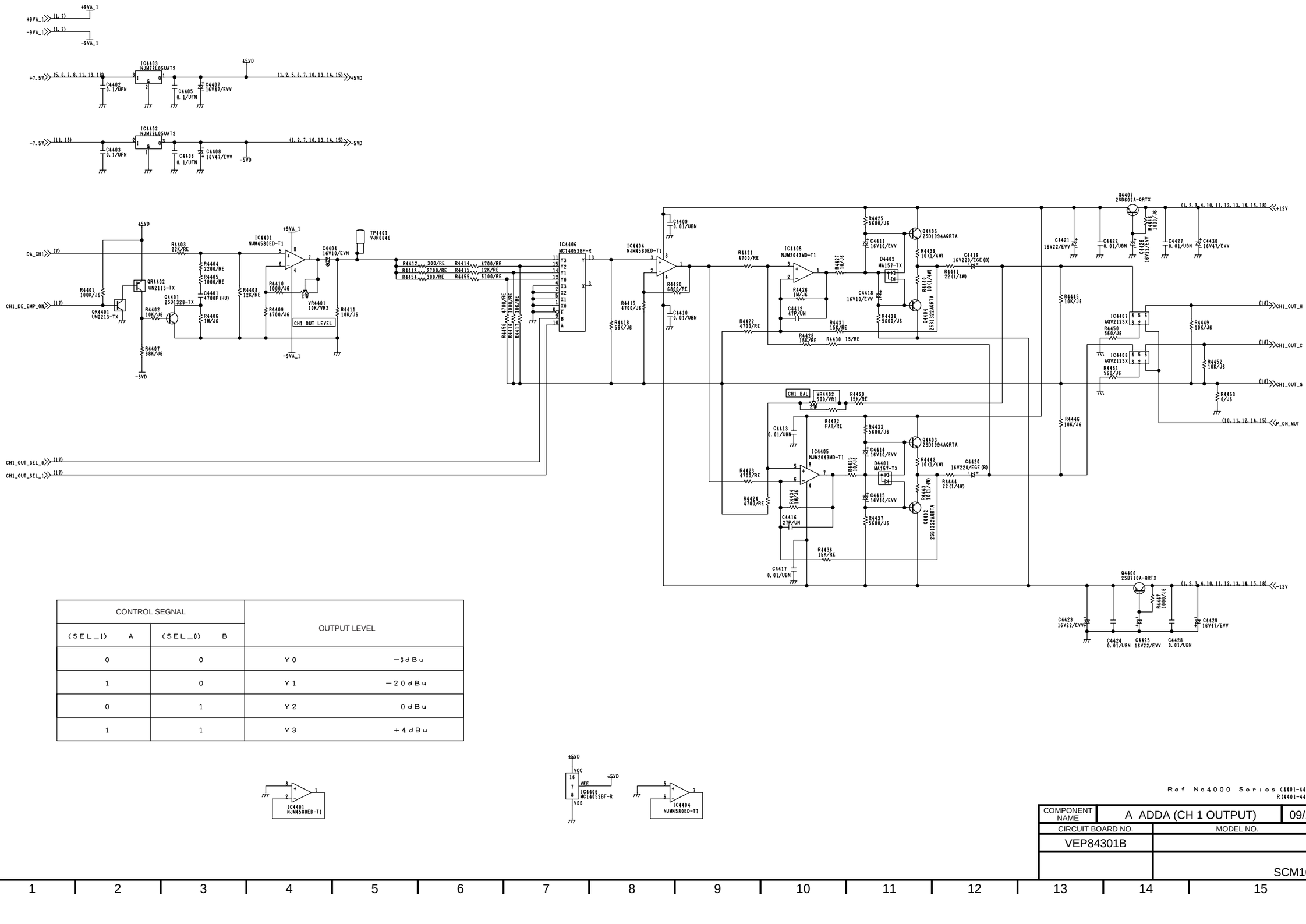

CONTROL SEGNAL		OUTPUT LEVEL	
(SEL_1) A	(SEL_0) B		
0	0	Y0	−3dBu
1	0	Y1	−20dBu
0	1	Y2	0dBu
1	1	Y3	+4dBu

Ref No4000 Series (4401-4475)
R(4401-4460)

COMPONENT NAME	A ADDA (CH 1 OUTPUT)	09/18
CIRCUIT BOARD NO.	MODEL NO.	
VEP84301B		
	SCM164	

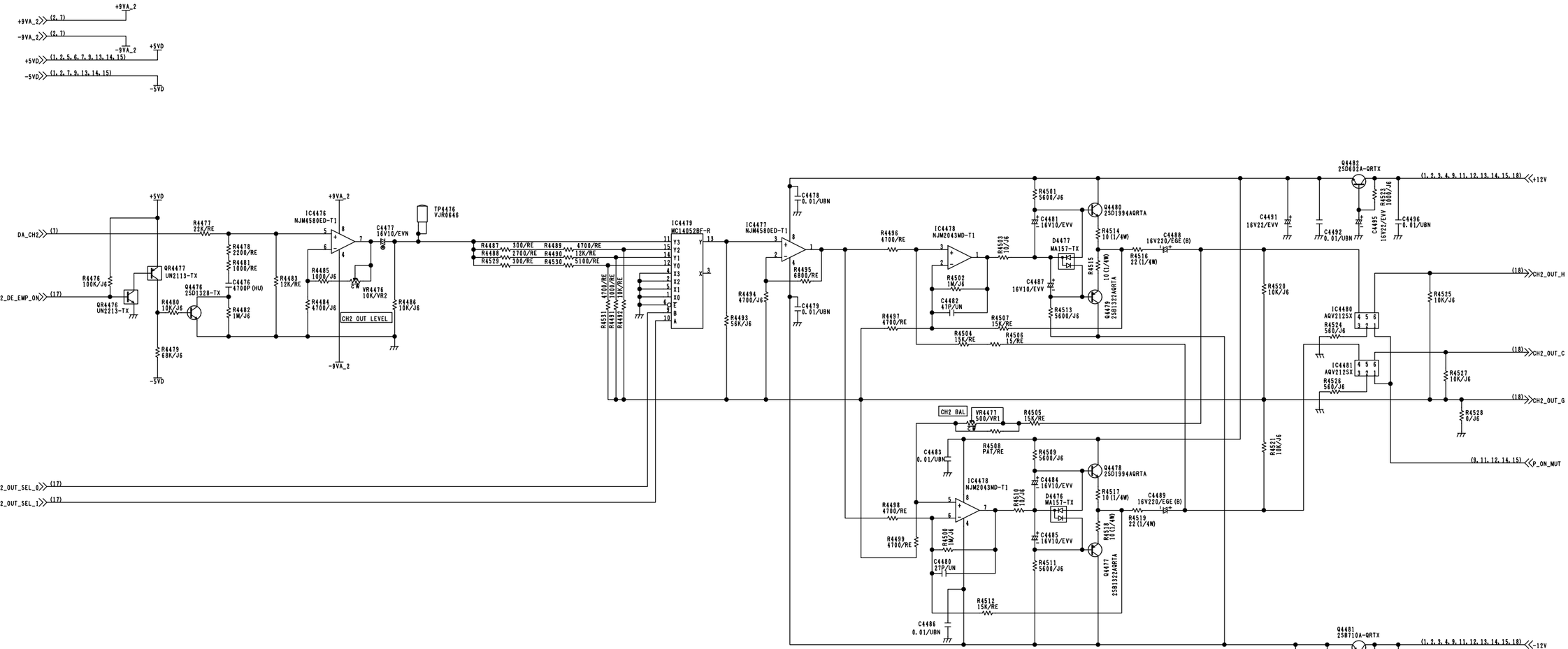

CONTROL SEGNAL		OUTPUT LEVEL	
(SEL_1) A	(SEL_0) B		
0	0	Y0	-3dBu
1	0	Y1	−20dBu
0	1	Y2	0dBu
1	1	Y3	+4dBu

Ref No4000 Series (4476-4550)
R (4476-4535)

COMPONENT NAME	A ADDA (CH 2 OUTPUT)	10/18
CIRCUIT BOARD NO.	MODEL NO.	
VEP84301B		
	SCM165	

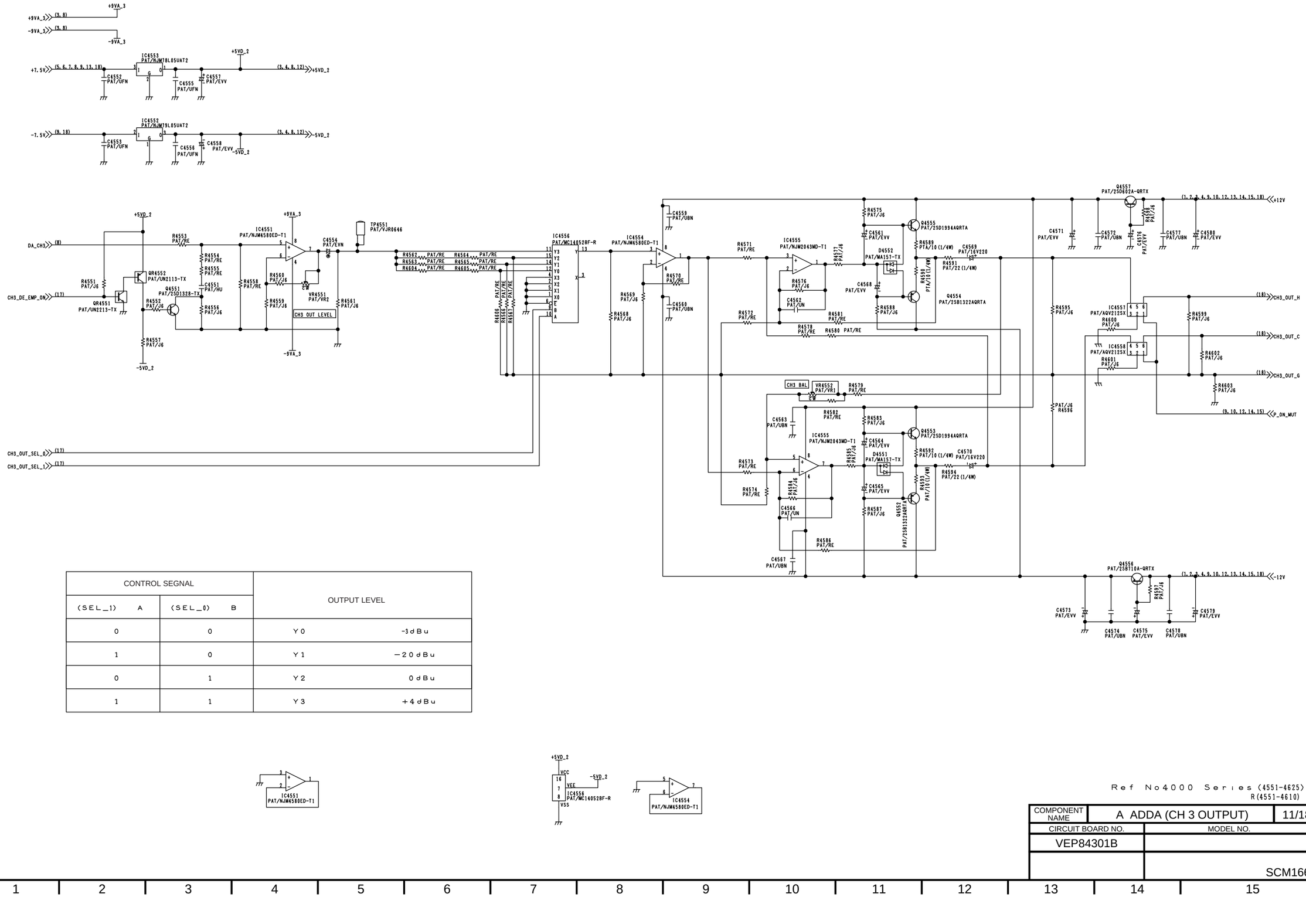

CONTROL SEGNAL		OUTPUT LEVEL	
(SEL_1) A	(SEL_0) B		
0	0	Y0	-3dBu
1	0	Y1	−20dBu
0	1	Y2	0dBu
1	1	Y3	+4dBu

Ref No4000 Series (4551-4625)
R(4551-4610)

COMPONENT NAME	A ADDA (CH 3 OUTPUT)	11/18
CIRCUIT BOARD NO.	MODEL NO.	
VEP84301B		
	SCM166	

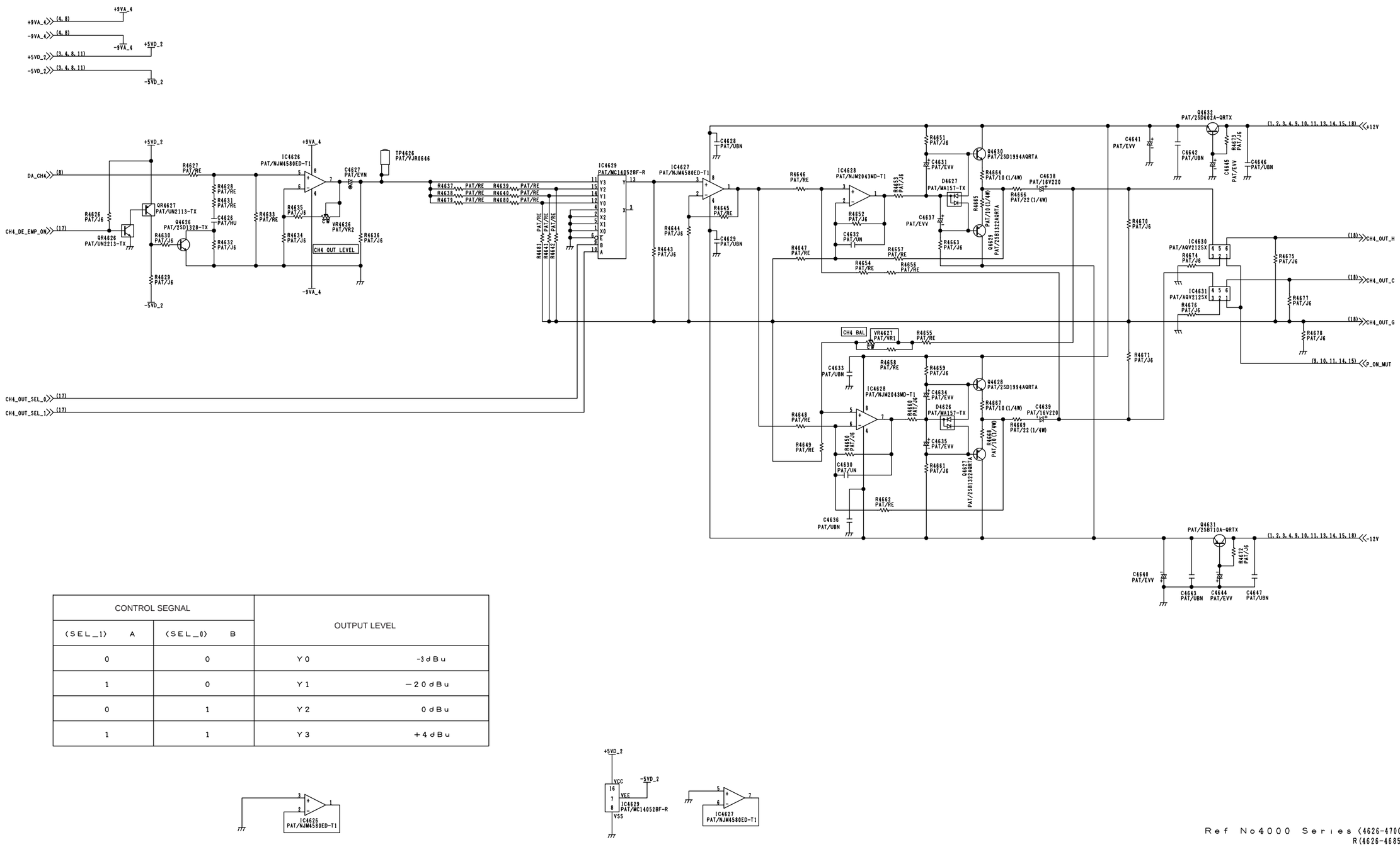

CONTROL SEGNAL		OUTPUT LEVEL	
(SEL_1) A	(SEL_0) B		
0	0	Y0	-3dBu
1	0	Y1	−20dBu
0	1	Y2	0dBu
1	1	Y3	+4dBu

Ref No4000 Series (4626-4700)
R(4626-4685)

COMPONENT NAME	A ADDA (CH 4 OUTPUT)	12/18
CIRCUIT BOARD NO.	MODEL NO.	
VEP84301B		
		SCM167

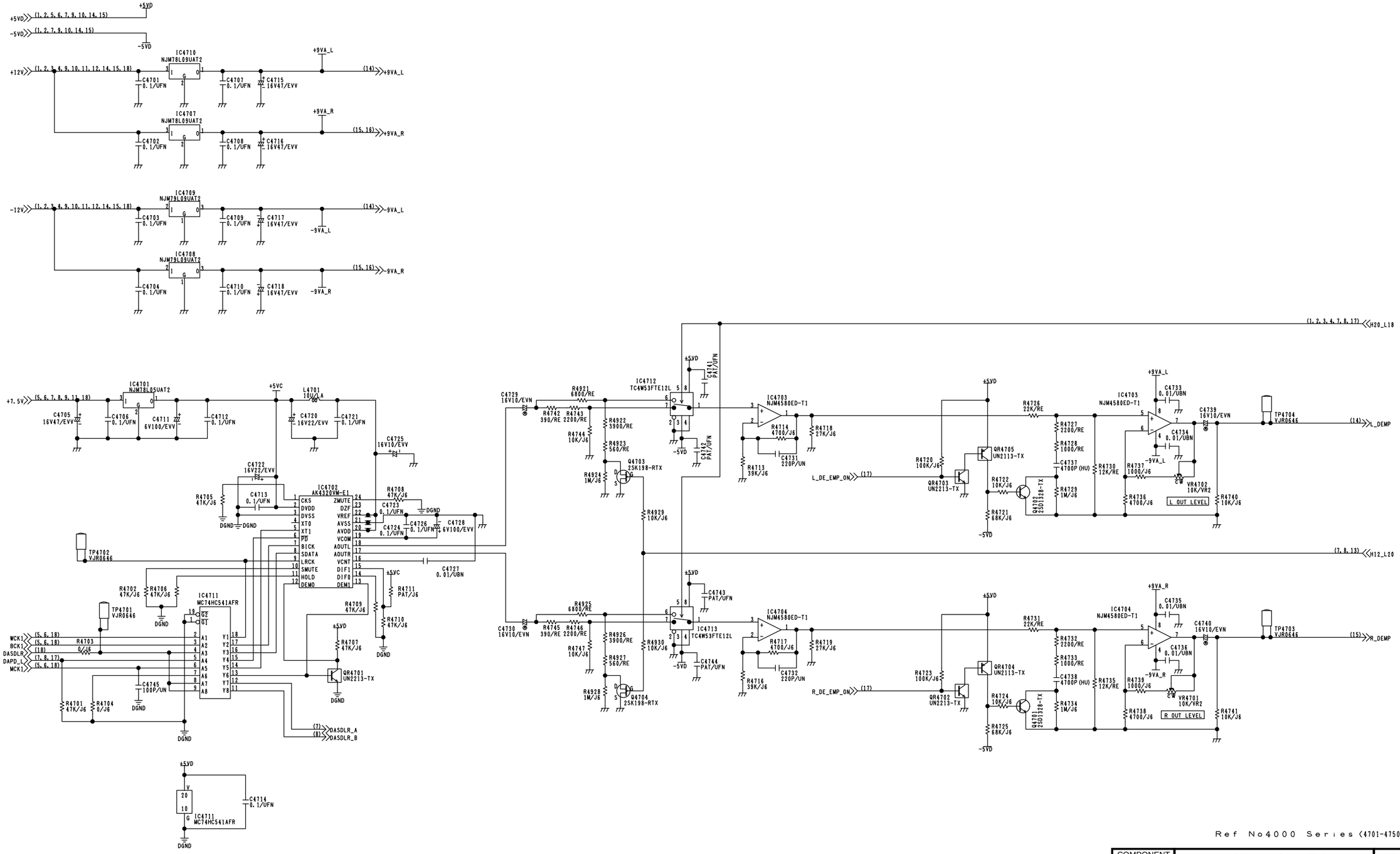

Ref No4000 Series (4701-4750)

COMPONENT NAME	A ADDA (MONI LR DA)	13/18
CIRCUIT BOARD NO.	MODEL NO.	
VEP84301B		
		SCM168

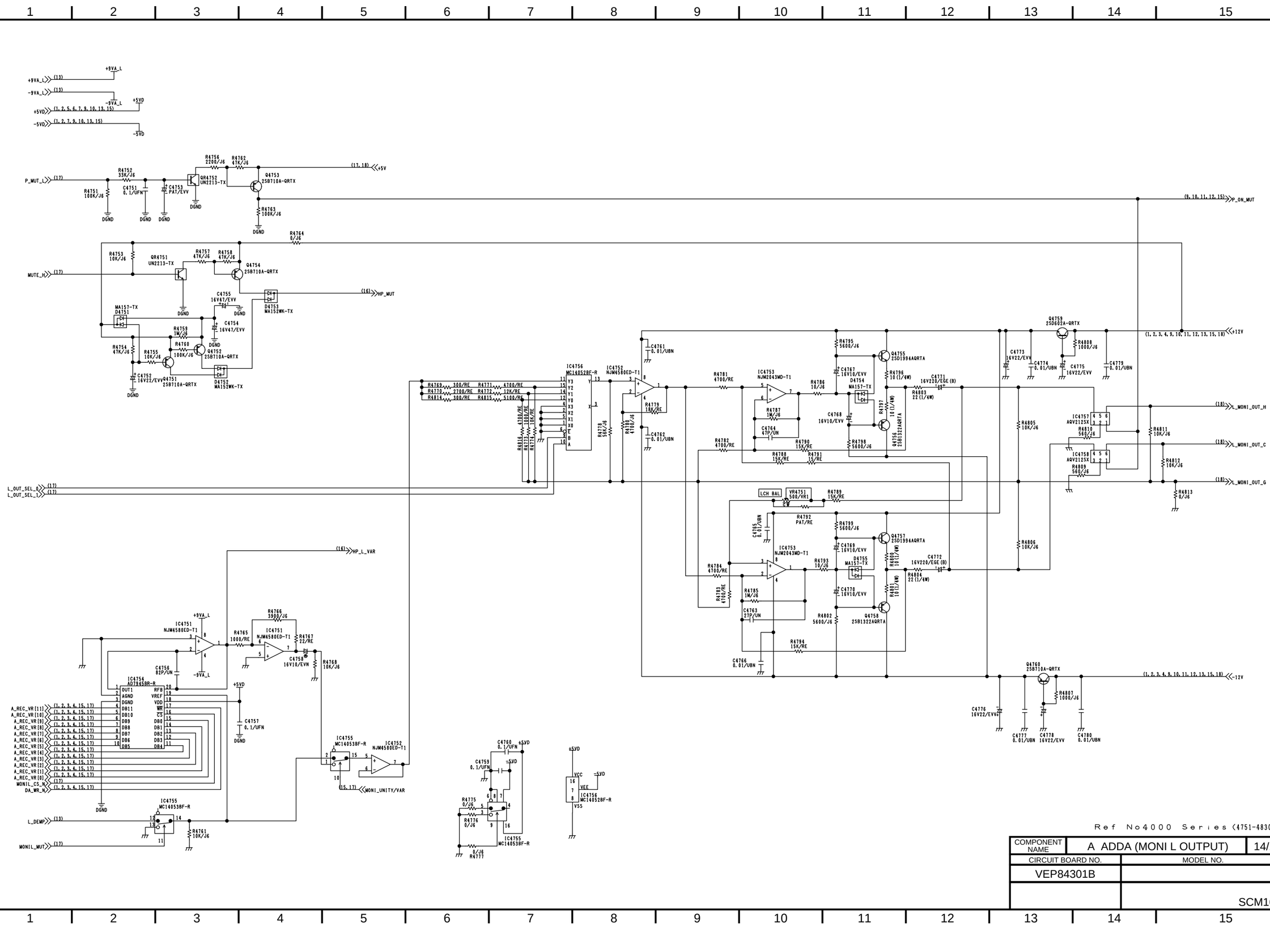
+9VA_L
-9VA_L
+5VD
-5VD
P_MUT_L
MUTE_H
HP_MUT
HP_L_VAR
P_ON_MUT
+5V
+12V
-12V
L_OUT_SEL_0
L_OUT_SEL_1
L_DEMP
MONI_MUT
MONI_UNITY/VAR
L_MONI_OUT_H
L_MONI_OUT_C
L_MONI_OUT_G
LCH BAL
VR4751 500/VR1
IC4756 MC14052BF-R
IC4752 NJM4580ED-T1
IC4753 NJM2043MD-T1
IC4754 AD7945BR-R
IC4755 MC14053BF-R
IC4751 NJM4580ED-T1
Ref No4000 Series (4751-4830)
A ADDA (MONI L OUTPUT)
14/18
VEP84301B
SCM169

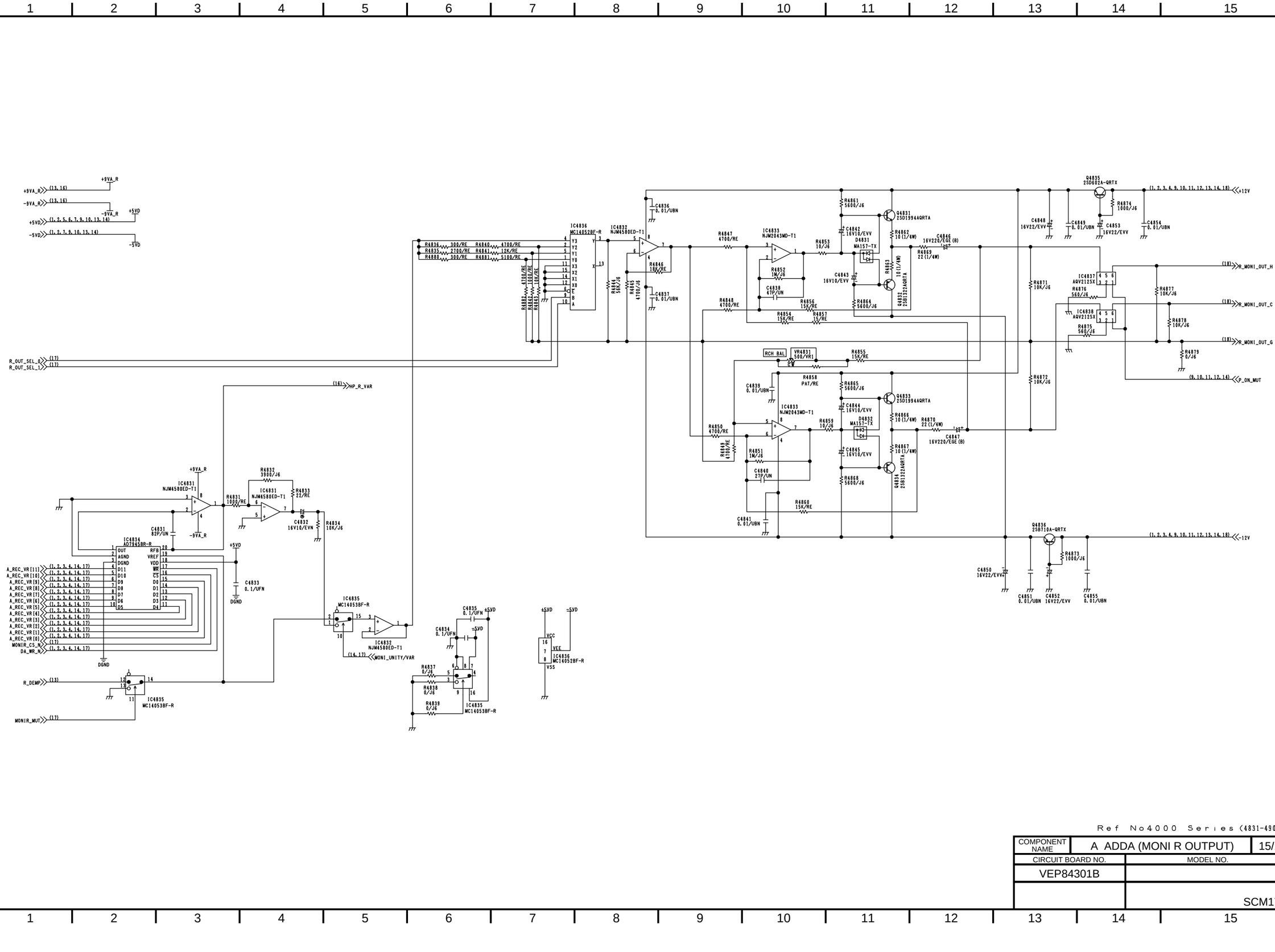

Ref No4000 Series (4831-4900)

COMPONENT NAME	A ADDA (MONI R OUTPUT)	15/18
CIRCUIT BOARD NO.	MODEL NO.	
VEP84301B		
	SCM170	

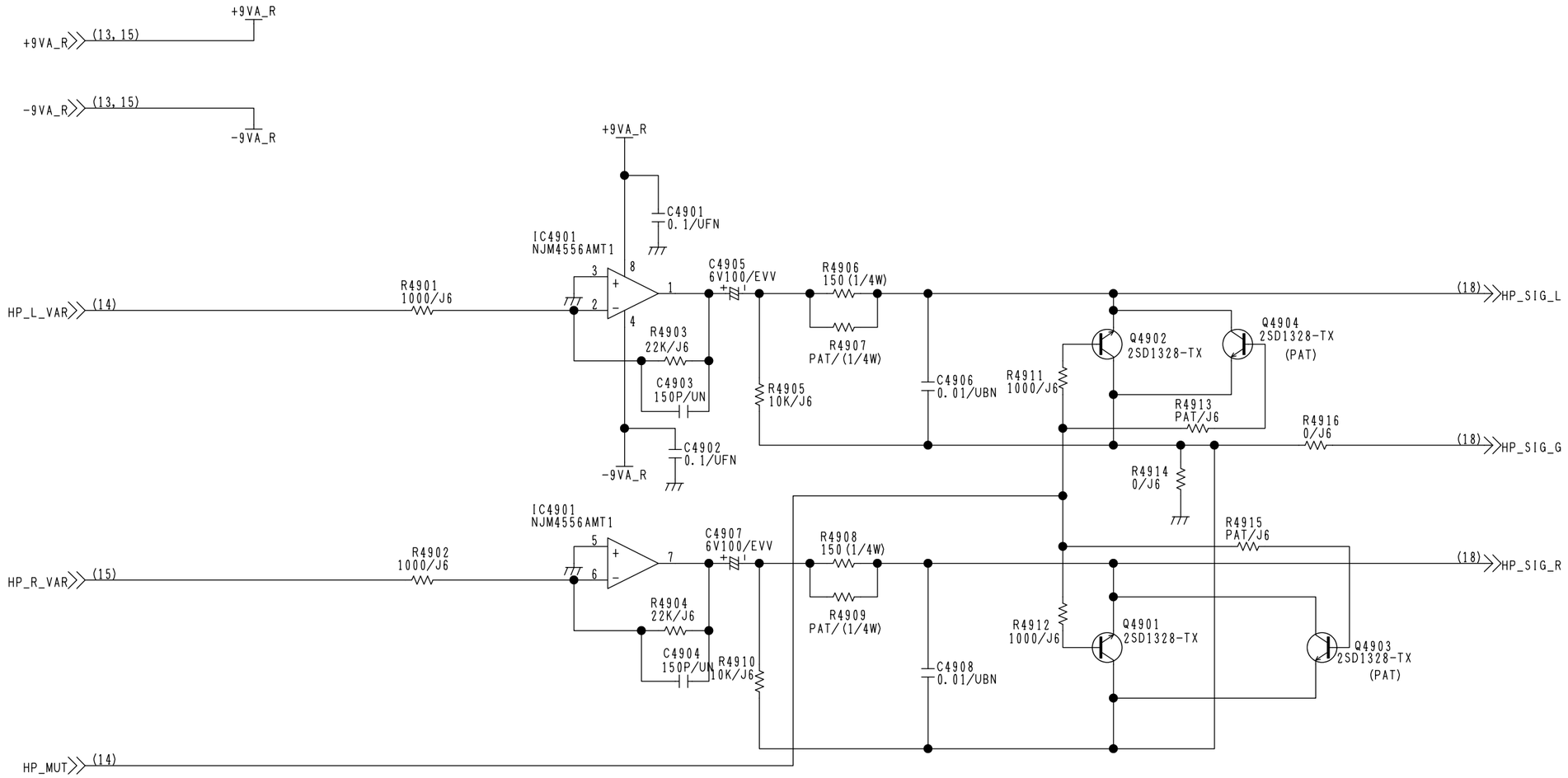

Ref No4000 Series (4901-4930)

COMPONENT NAME	A ADDA (HP OUTPUT)	16/18
CIRCUIT BOARD NO.	MODEL NO.	
VEP84301B		
	SCM171	

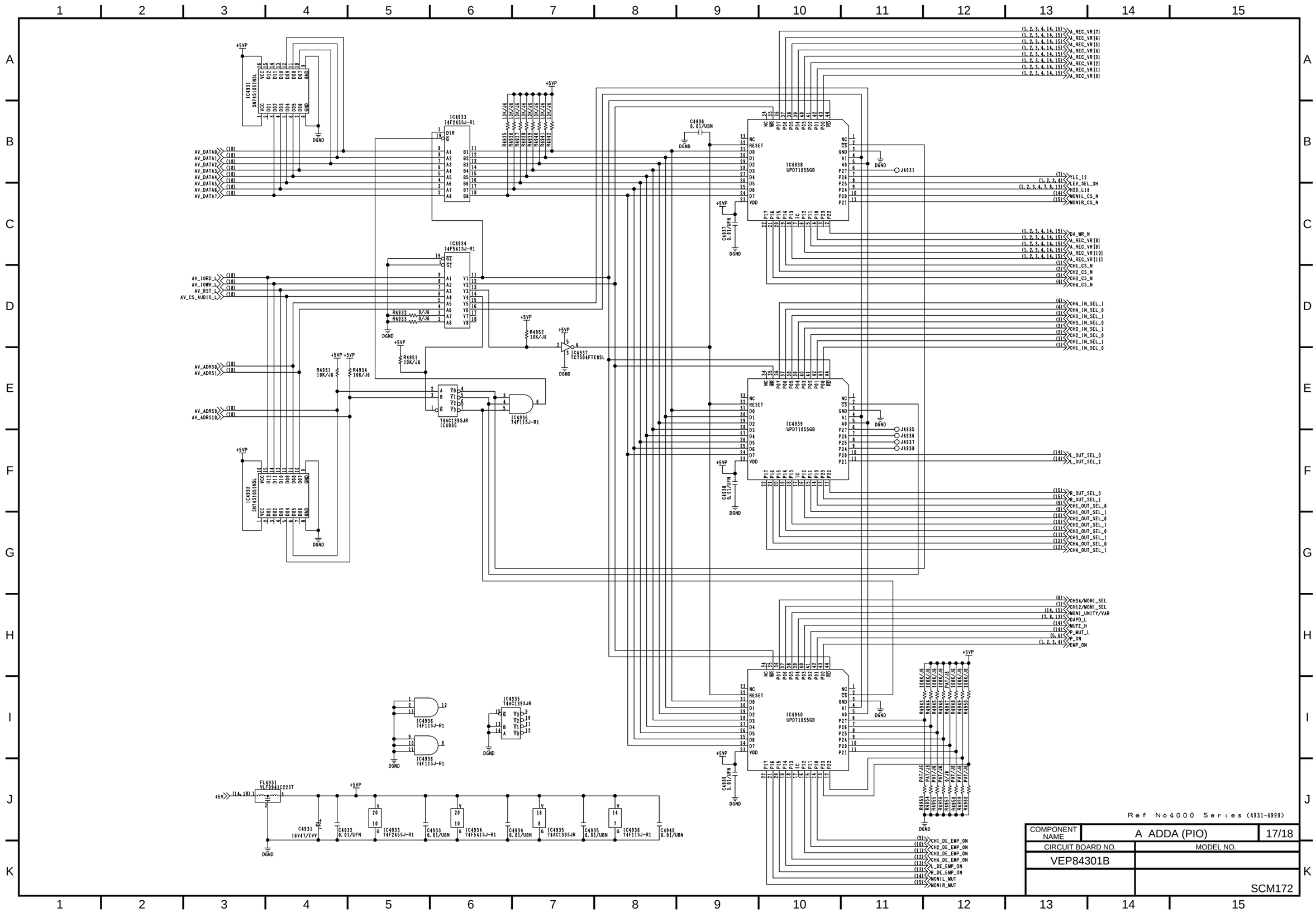
IC4931 SN74S1051NSL
IC4932 SN74S1051NSL
IC4933 74F245SJ-R1
IC4934 74F541SJ-R1
IC4935 74AC139SJR
IC4936 74F115J-R1
IC4937 TC7S04FTE85L
IC4938 UPD71055GB
IC4939 UPD71055GB
IC4940 UPD71055GB
FL4931 VLF0941C223T
AV_DATA0 AV_DATA1 AV_DATA2 AV_DATA3 AV_DATA4 AV_DATA5 AV_DATA6 AV_DATA7
AV_IORD_L AV_IOWR_L AV_RST_L AV_CS_AUDIO_L
AV_ADRS0 AV_ADRS1 AV_ADRS9 AV_ADRS10
A_REC_VR [7] A_REC_VR [6] A_REC_VR [5] A_REC_VR [4] A_REC_VR [3] A_REC_VR [2] A_REC_VR [1] A_REC_VR [0]
YLE_12 LEV_SEL_3H H20_L18 MONIL_CS_N MONIR_CS_N
DA_WR_N A_REC_VR [8] A_REC_VR [9] A_REC_VR [10] A_REC_VR [11] CH1_CS_N CH2_CS_N CH3_CS_N CH4_CS_N
CH4_IN_SEL_1 CH4_IN_SEL_0 CH3_IN_SEL_1 CH3_IN_SEL_0 CH2_IN_SEL_1 CH2_IN_SEL_0 CH1_IN_SEL_1 CH1_IN_SEL_0
L_OUT_SEL_0 L_OUT_SEL_1
R_OUT_SEL_0 R_OUT_SEL_1 CH1_OUT_SEL_0 CH1_OUT_SEL_1 CH2_OUT_SEL_0 CH2_OUT_SEL_1 CH3_OUT_SEL_0 CH3_OUT_SEL_1 CH4_OUT_SEL_0 CH4_OUT_SEL_1
CH34/MONI_SEL CH12/MONI_SEL MONI_UNITY/VAR DAPD_L MUTE_H P_MUT_L P_ON EMP_ON
CH1_DE_EMP_ON CH2_DE_EMP_ON CH3_DE_EMP_ON CH4_DE_EMP_ON L_DE_EMP_ON R_DE_EMP_ON MONIL_MUT MONIR_MUT
+5VP DGND
Ref No4000 Series (4931-4999)
COMPONENT NAME: A ADDA (PIO) 17/18
CIRCUIT BOARD NO.: VEP84301B
MODEL NO.:
SCM172

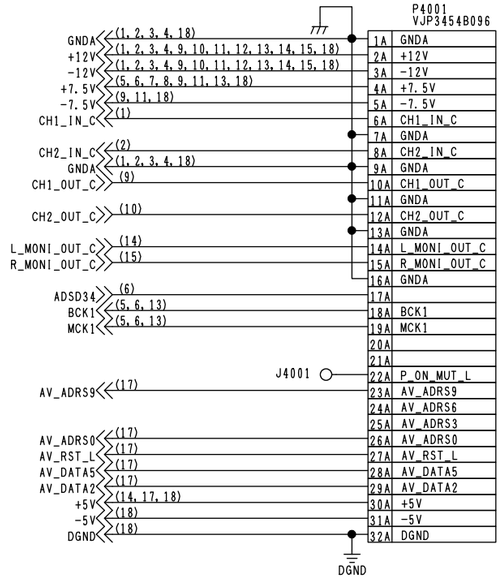

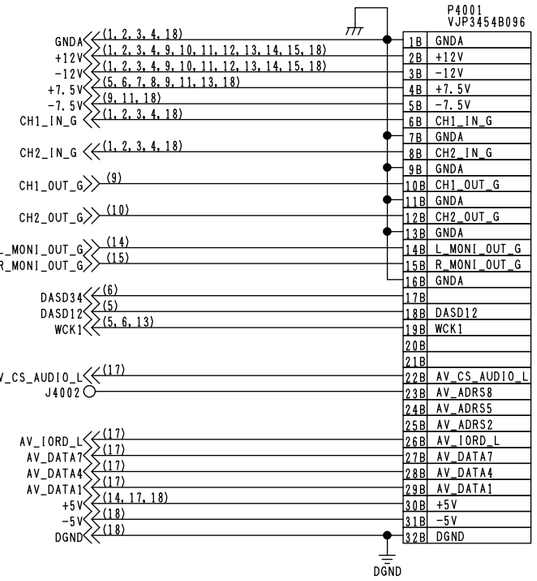

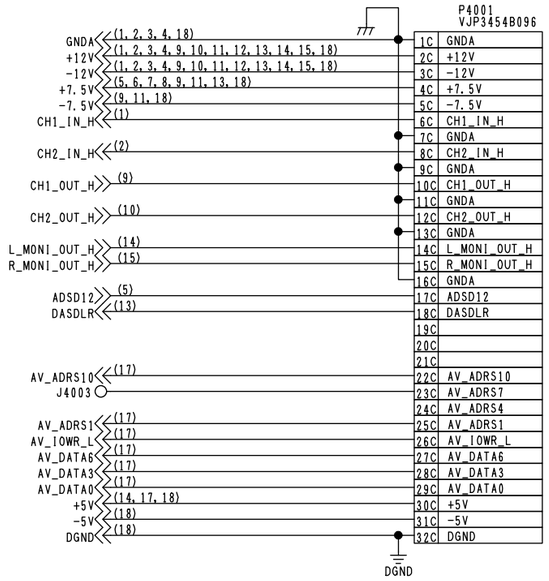

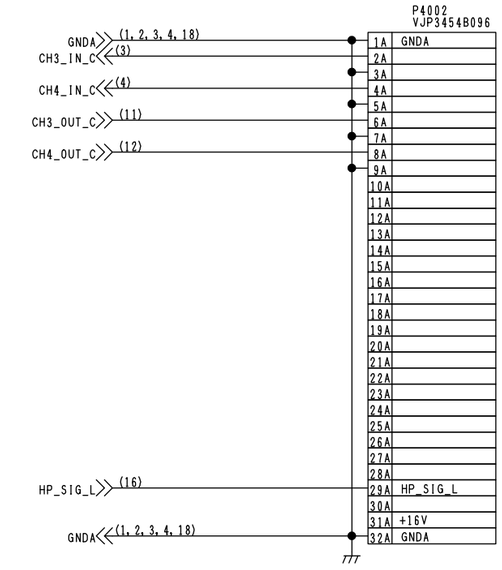

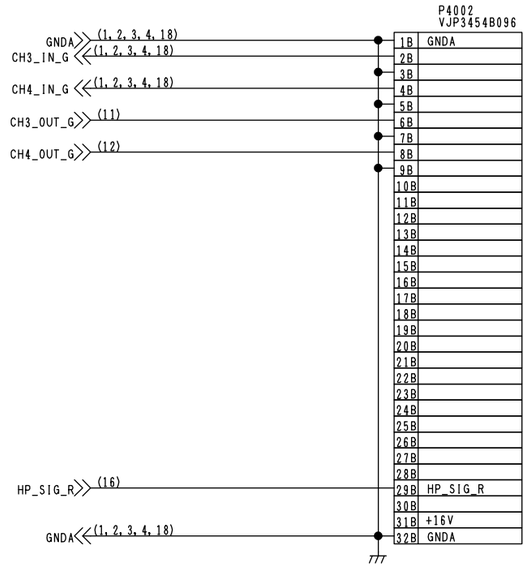

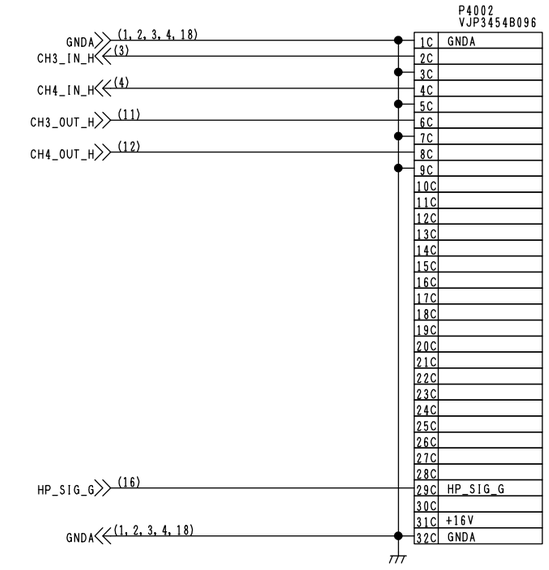

Ref No4000 Series

COMPONENT NAME	A ADDA (CONNECTOR)	18/18
CIRCUIT BOARD NO.	MODEL NO.	
VEP84301B		
	SCM173	

Panasonic

DVCPRO

ENGLISH

DEUTSCH

FRANÇAIS

ITALIANO

ESPAÑOL

Digital Video Cassette Recorder

AJ-D850E

Operating Instructions

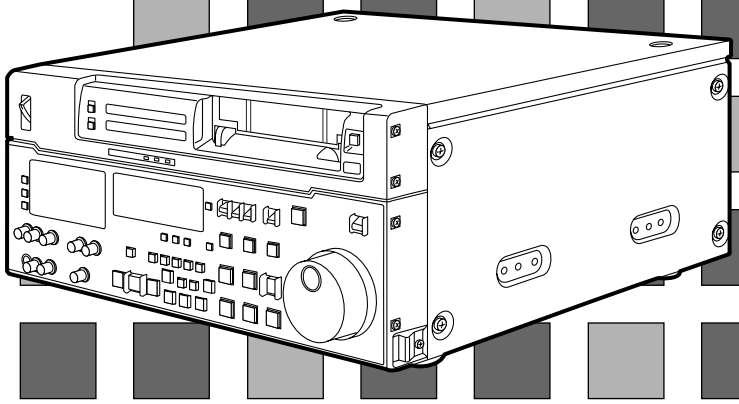

Caution for AC Mains Lead

FOR YOUR SAFETY PLEASE READ THE FOLLOWING TEXT CAREFULLY.
This product is equipped with 2 types of AC mains cable. One is for continental Europe, etc. and the other one is only for U.K.
Appropriate mains cable must be used in each local area, since the other type of mains cable is not suitable.

FOR CONTINENTAL EUROPE, ETC. Not to be used in the U.K.	**FOR U.K. ONLY** If the plug supplied is not suitable for your socket outlet, it should be cut off and appropriate one fitted.
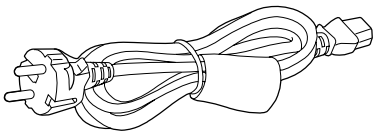	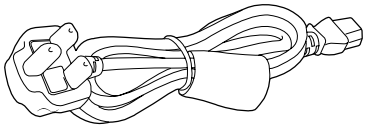

FOR U.K. ONLY

This appliance is supplied with a moulded three pin mains plug for your safety and convenience.
A 13 amp fuse is fitted in this plug.
Should the fuse need to be replaced please ensure that the replacement fuse has a rating of 13 amps and that it is approved by ASTA or BSI to BS1362.
Check for the ASTA mark or the BSI mark on the body of the fuse.

If the plug contains a removable fuse cover you must ensure that it is refitted when the fuse is replaced.
If you lose the fuse cover the plug must not be used until a replacement cover is obtained.
A replacement fuse cover can be purchased from your local Panasonic Dealer.

IF THE FITTED MOULDED PLUG IS UNSUITABLE FOR THE SOCKET OUTLET IN YOUR HOME THEN THE FUSE SHOULD BE REMOVED AND THE PLUG CUT OFF AND DISPOSED OF SAFELY. THERE IS A DANGER OF SEVERE ELECTRICAL SHOCK IF THE CUT OFF PLUG IS INSERTED INTO ANY 13 AMP SOCKET.

If a new plug is to be fitted please observe the wiring code as shown below.
If in any doubt please consult a qualified electrician.
WARNING: THIS APPLIANCE MUST BE EARTHED.
IMPORTANT: The wires in this mains lead are coloured in accordance with the following code:

Green-and-Yellow:	Earth
Blue:	Neutral
Brown:	Live

As the colours of the wires in the mains lead of this appliance may not correspond with the coloured markings identifying the terminals in your plug, proceed as follows:

- The wire which is coloured GREEN-AND-YELLOW must be connected to the terminal in the plug which is marked with the letter E or by the Earth symbol ⏚ or coloured GREEN or GREEN-AND-YELLOW.
- The wire which is coloured BLUE must be connected to the terminal in the plug which is marked with the letter N or coloured BLACK.
- The wire which is coloured BROWN must be connected to the terminal in the plug which is marked with the letter L or coloured RED.

How to replace the fuse

1. Open the fuse compartment with a screwdriver.

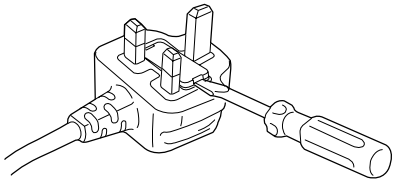

2. Replace the fuse.

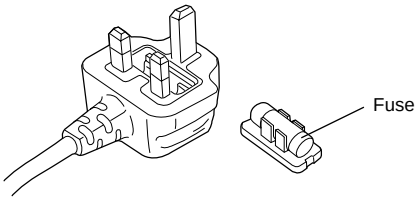

IMPORTANT

"Unauthorized recording of copyrighted television programmes, video tapes and other materials may infringe the right of copyright owners and be contrary to copyright laws."

ENGLISH

■ **THIS APPARATUS MUST BE EARTHED**

To ensure safe operation the three-pin plug must be inserted only into a standard three-pin power point which is effectively earthed through the normal house-hold wiring.

Extension cords used with the equipment must be three-core and be correctly wired to provide connection to earth. Wrongly wired extension cords are a major cause of fatalities.

The fact that the equipment operates satisfactorily does not imply that the power point is earthed and that the installation is completely safe. For your safety, if in any doubt about the effective earthing of the power point, consult a qualified electrician.

■ **DO NOT REMOVE PANEL COVER BY UNSCREWING**

To reduce the risk of electric shock, do not remove cover. No user serviceable parts inside. And do not insert fingers or any other objects into the video cassette holder.

CAUTION:

Do not install or place this unit in a bookcase, built in cabinet or in another confined space in order to keep well ventilated condition. Ensure that curtains and any other materials do not obstruct the ventilation condition to prevent risk of electric shock or fire hazard due to overheating.

WARNING:

TO REDUCE THE RISK OF FIRE OR SHOCK HAZARD, DO NOT EXPOSE THIS EQUIPMENT TO RAIN OR MOISTURE.

CAUTION:

TO REDUCE THE RISK OF FIRE OR SHOCK HAZARD, AND ANNOYING INTERFERENCE, USE THE RECOMMENDED ACCESSOIRES ONLY.

CAUTION:

To reduce the risk of fire or shock hazard, refer change of switch setting inside the unit to qualified service personnel.

Operating precaution

Operation near any appliance which generates strong magnetic fields may give rise to noise in the video and audio singals. If this should be the case, deal with the situation by, for instance, moving the source of the magnetic fields away from the unit before operation.

☐ is the safety information.

Attention/Attentie

- This apparatus contains a lithium battery for memory back-up.
- For the removal of the battery at the moment of the disposal at the end of the service life please consult your dealer.
- Do not throw away the battery. Instead, hand it in as hazardous waste.

- Dit apparaat bevat een lithiumbatterij voor memory back-up.
- Raadpleeg uw leverancier over de verwijdering van de batterij op het moment dat u het apparaat bij einde levensduur afdankt.
- Gooi de batterij niet weg, maar lever hem in als KCA.

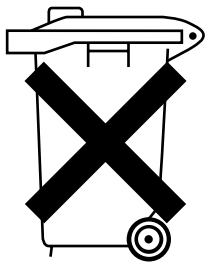

Contents

General and Features 5
Controls and their functions 7
• Front panel 7
  • Front panel top section 8
  • Front panel centre section 9
  • Front panel bottom section 14
• Front panel bottom section 15
• Connector area 17
Connections
• Connections when one unit is used 20
• Connections when 2 units are used 21
• Connections with editing controller 22
• Connections for adjusting video output (encoder output) signals 23
Tapes 24
Switching on the power/inserting the cassette 25
STOP/STAND BY mode 26
Recording 27
Playback 28
Jog/shuttle 29
Manual editing 30
Preroll 31
Automatic editing 32
• Switch settings and adjustments 33
• Selecting the editing mode 34
• Entering the edit points 35
• Checking the edit points 36
• Modifying the edit points 37
• Preview 38
• Executing automatic editing 39
• Review 40
• Split editing 41
• Audio split editing 42
• Voice-over facility 44
• Audio cross-channel editing 47
V blanking data recording/playback 49
Video output (encoder output) signal adjustment 50
Setup (default settings) 51
Setup menus 52
• System menu 56
• Basic menu 58
• Operation menu 60
• Interface menu 63
• Edit menu 64
• Tape protect menu 68
• Time Code menu 69
• Video menu 71
• Audio menu 72
• V BLANK menu 75
• Menu menu 78
Time code/user bit 79
• Recording internal/external time codes 80
• Reproducing the time code/user bit 81
Superimpose screen 82
Servo reference 83
Audio V Fade Function 85
Printed circuit board 86
Rack mounting 87
Video head cleaning 88
Condensation 88
Error messages 89
Table of AUTO OFF Error messages 91
RS-232C interface 93
Connector signals 100
Specifications 102

Before operating this unit, check that all of its accessories are present and accounted for.

Power cord....1 pc

Option

• AJ-YA750P Component serial interface board
• AJ-CS750P Cassette adaptor
• AJ-MA75P Rack mounting adaptor
• AJ-YA752 Audio memory unit
• AJ-YAC850P SDTI/SDI board

This unit is a digital video cassette recorder which uses 1/4-inch tapes.
It incorporates digital compression technology so that the deterioration in picture quality and sound quality resulting from dubbing is significantly minimized compared with existing analogue systems.
Furthermore, since it has a compact 4U size and light weight, the unit can be carried around or mounted in a 19-inch rack with ease.
The settings for the unit's setup can be performed interactively while viewing the screen menus on the TV monitor, and editing functions include both assemble and insert editing.

Features

Compact size and light weight

This is a 4U size digital VTR. It can be mounted in a 19-inch rack with ease using the optional rack-mounting adaptors (AJ-MA75P).

Up to 184 minutes of recording

Two sizes of cassette tapes can be used with this unit: M cassette (max. 66 minutes) and L cassette (max. 184 minutes). The width of the tapes measures 1/4 inch to achieve a compact design.

Compatibility with consumer products

Consumer cassette tapes shot with digital cameras available on the consumer market can be played back on this unit using the optional cassette adaptor (AJ-CS750P).
<Notes>
• Slow motion playback is not possible with consumer cassette tapes.
• Consumer cassette tapes recorded in LP mode cannot be played back.

Digital slow motion/dial jog

The slow-motion playback images can be reproduced clearly at any of the speeds given below using commands from the external controller or other such device: –0.43/–0.3/–0.2/–0.1/–0.03/0/+0.03/+0.1/+0.2/+0.3/+0.5/+0.75.
<Note>
Some noise may occur when the slow motion speed is changed.

Digital audio output in slow-motion/jog mode

This enables smooth playback of sound even in the slow-motion or jog mode, making it easier to use sound to search for edit points and determine their positions.

Dial shuttle

Shuttle operations enable the tape to be played back with colour images at a speed of up to 60 times normal tape speed in either the forward or reverse direction.

Internal audio memory with 20-second capacity

Sound can now be recorded as pictures are played back without any time lag between the sound and picture (a process known as "voice-over"). Audio cross channel editing is enabled by using the unit in combination with an external sound mixer.

Audio memory unit (AJ-YA752) supported

Voice-over extending up to 34 minutes and 30 seconds (5 min. 46 sec. standard) is enabled by connecting the AJ-YA752 unit (optional accessory).

Features
(continued)

Recording and playing back V blanking data
In addition to closed caption and VITC, up to 28 lines of the character data per frame in the V blanking period can be recorded and played back.

Time codes
This unit comes with a built-in time code generator (TCG)/time code reader (TCR). In addition to the internal time code, an external code input or input signal VITC can be recorded in the machine as the LTC time code.

Multi-function input/output interfaces
- **Analogue input/output**
  Component (Y, P_B, P_R) and composite signal input and output connectors are provided.
- **Serial digital input/output**
  Digital component interfacing complying with the EBU Tech. 3267-E serial digital signal standard is possible when the optional component serial interface board (AJ-YA750P) is used. Transfer using SDTI is enabled by the AJ-YAC850P SDTI/SDI board (option). (SMPTE 305M)
- **AES/EBU audio input/output**
  Digital audio input and output connectors are provided.
- **9-pin (RS-422A)/(RS-232C) remote**
  In addition to the standard 9-pin serial (RS-422A) connector, RS-232C and 25-pin parallel connectors are also featured.
  The RS-422A connector enables another VTR to be operated in parallel with the unit if a looping connection is used for the two units.

2-channel high-sound-quality digital audio
Sound can be edited separately for two channels while channel mixing capabilities are also available. One channel is provided for the analogue cue track.

Automatic editing functions
Assembly and insert editing can be performed.

Menu-driven setup
The setup settings, which are conducted prior to operating the unit, are performed while viewing the setup menus either on the unit's display or a TV monitor.

ENGLISH

Front panel

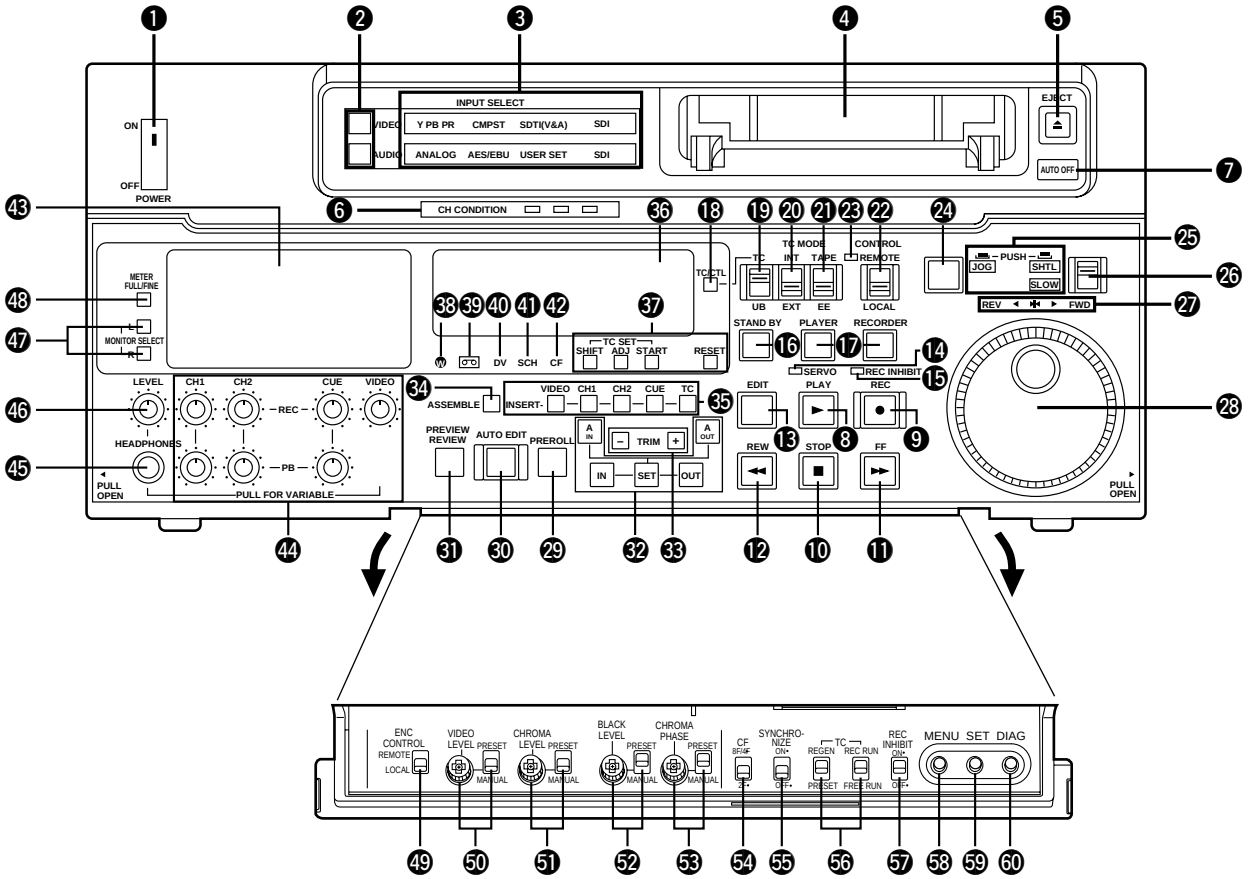

<Front Panel Top Section>

❶ POWER switch

When the ON side is pressed, the power is switched on, and the audio level and video level meters, counter display and INPUT SELECT display light up.

❷ INPUT SELECT switches

These are used to select the video and audio input signals.

<Video>

Each time the VIDEO button is pressed, the input video signal selection is switched in the order of Y P_B P_R, COMPOSITE, SDTI (V&A), SDI and back to Y P_B P_R. If SDTI (V&A) is selected, both the video and audio signals will be input from SDTI.

<Audio>

Each time the AUDIO button is pressed, the input audio signal selection is switched in the order of ANALOG, AES/EBU, USER SET, SDI and back to ANALOG.

USER SET is a function for selecting two different input signals to be recorded on PCM audio signal CH1 and CH2, and it is used in tandem with the setup menu.

For instance, if USER SET is selected by INPUT SELECT and CH1=ANALOG, and CH2=DIGI are selected on the setup menu No. 710 (CH1 IN SEL), No. 711 (CH2 IN SEL) and No. 712 (DIGI IN SEL), the analogue input signal and AES/EBU digital signal will be respectively recorded on channels 1 and 2 of the PCM audio signals recorded on the tape. However, when SDTI has been selected for the video input, SDTI input will be forcibly established for the audio input as well.

<Front Panel Top Section>

❸ INPUT SELECT display

The characters corresponding to the selected input signal light. When, with the exception of analogue signals, the selected input signals are not available, the display flashes to alert the user.

<Video>

Y PB PR: Analogue component video signal
CMPST: Analogue composite video signal
SDTI (V&A): Compressed data, serial and digital video and audio signals (option)
SDI: Serial digital video signal (EBU Tech. 3267-E) (option)

When BB has been selected as the setup menu No. 601 (INT BB SIG) setting, the entire display area will light up.

<Audio>

ANALOG: Analogue audio signal
AES/EBU: Digital audio signal
USER SET: Selection of audio signal to be recorded
SDI: Serial digital audio signal (EBU Tech. 3267-E) (option)

When ON has been selected as the setup menu No. 722 (INT SG) setting, the entire display area will light up.

❹ Cassette insertion slot

The M cassette, L cassette and consumer cassette (S cassette) with adaptor are inserted into this slot.
Consumer cassettes can be played back only.

❺ EJECT button

When this is pressed, the tape is unloaded and several seconds later the cassette is automatically ejected. When the counter display indicates “CTL”, the display is reset.
The lamp lights when the eject command is received.

❻ Channel condition lamps

One of these lamps lights in accordance with the error rate status. (Green→amber→red)

Green: This lights when the error rates for the video and audio playback signals are both acceptable.
Amber: This lights when the error rate for the video or audio playback signals has deteriorated.
Red: The playback picture will remain normal even when this lamp lights.
This lights when the video or audio signals are subject to rectification or interpolation.

❼ AUTO OFF lamp

This lights when trouble has arisen in the deck’s operation.

<Front Panel Centre Section>

❽ PLAY button

Playback commences when this button is pressed.

Recording commences when the button is pressed together with the REC button; manual editing commences when it is pressed together with the EDIT button during playback.

Pressing only the PLAY button during manual editing will cut out the editing and establish the playback mode.

❾ REC button

Recording commences when this button is pressed together with the PLAY button.

When it is pressed during playback, search, fast forward or rewind, EE mode images and audio signals can be monitored for as long as it is kept depressed.

When it is pressed in the stop mode, EE mode images and sound can be monitored. When the STOP button is pressed, the original picture and sound are restored.

❿ STOP button

When this is pressed, the tape stops travelling, and if the TAPE/EE selector switch is at TAPE, still pictures can be monitored.

The drum continues to rotate even in the stop mode, and the tape remains in close contact with the drum.

If the stop mode continues for more than a certain period of time, the unit automatically switches to the standby OFF mode in order to protect the tape.

The stop mode is established immediately after a cassette has been inserted into the unit.

⓫ FF button*

The tape is fast forwarded when this is pressed.

⓬ REW button*

The tape is rewound when this is pressed.

⓭ EDIT button

For manual editing, press both this button and the PLAY button together during playback.

When the button is pressed in the stop mode, the input mode signals selected by the ASSEMBLE or INSERT button can be monitored in the EE mode.

The original picture and sound are restored when the STOP button is pressed.

When the button is pressed during playback, search, fast forward or rewind, the input signals of the mode selected by the ASSEMBLE or INSERT button can be monitored in the EE mode for as long as the button is held down.

⓮ SERVO lamp

This lights when the drum servo and capstan servo have locked.

⓯ REC INHIBIT lamp

This lights when the REC INHIBIT switch in the front panel bottom section is at ON or when the accidental erasure prevention mode has been set for the cassette.

In this state, neither recording nor editing is possible.

* The FF/REW speed can be selected on the setup menu No. 102 (FF. REW MAX), and it is set to the same speed.

ENGLISH

<Front Panel Centre Section>

⑯ STAND BY button

When this is pressed, the same tension as in the regular stop mode is applied to the tape, and while the head drum continues to rotate, the button's lamp lights to indicate that the standby ON mode is established.

In the standby OFF mode, the half-loading mode is established.

When this button is pressed in the stop mode, the standby OFF mode is established, the half-loading mode is established. The lamp in the button now goes off. When the unit remains in the stop mode for longer than a predetermined period, the standby OFF mode is automatically established in order to protect the tape.

When this button or the STOP button is pressed in the standby OFF mode, the standby ON mode is established.

When a button other than the STOP button is pressed, the mode corresponding to the button pressed is established.

On-screen settings are available for the transfer time to the standby OFF mode.

⑰ PLAYER/RECORDER buttons

These buttons are operated when editing operations are conducted using the unit as the recorder and a VTR equipped with an RS-422A serial interface remote control connector (9 pins). Neither button functions when the unit is used on its own.

PLAYER button: When this button is pressed, its lamp lights, and the player connected to the unit can be operated by remote control. The unit's editing and tape transport buttons now control the player's functions.

RECORDER button: When this button is pressed, its lamp lights, and the editing and tape transport buttons control the recorder's (= the unit's) functions.

⑱ TC/CTL switch

By pressing this switch, what appears on the counter display is changed between TC and CTL.

When TC is selected, either the TC or UB value is displayed depending on the position selected by the TC/UB switch.

⑲ TC/UB switch

This selector switch determines whether the value of TC or UB appears on the counter display when the TC/CTL switch has been set to TC.

⑳ INT/EXT switch

INT: For using the built-in time code generator.

EXT: For using the time external code which is input from the time code input connector or the video signal VITC. The selection is set at the setup menu No. 505 (EXT TC SEL).

㉑ TAPE/EE switch

<In the stop mode>

TAPE: For outputting the signals played back from the tape.

EE: For outputting the input signals selected by the INPUT SELECT switch.
Select NORMAL or THRU as the setup menu No. 116 (EE MODE SEL) setting. In either case, use the switch for monitoring purposes.

<In the editing*/recording mode>

TAPE: For outputting the simultaneous playback signals.

EE: For outputting the input signals selected by the INPUT SELECT switch.

* The SETUP menu No. 308 (CONFI EDIT) setting is required.

<Front Panel Centre Section>

㉒ REMOTE/LOCAL switch

This switch is set when the unit is to be controlled from an external source using the REMOTE connector, RS-232C connector or parallel connector.

REMOTE: Set to this position when controlling the unit by a device connected using the 9-pin REMOTE connector or RS-232C/parallel connector.

LOCAL: Set to this position when controlling the unit using the controls on its own operation panel.

㉓ REMOTE lamp

This lights when the REMOTE/LOCAL switch has been set to the REMOTE position.

㉔ Search button

This button is pressed to establish the search mode.

When the search dial is set to the shuttle mode and turned to a particular position, and this button is pressed, playback commences at the speed set by the search dial.

㉕ JOG/SHTL/SLOW lamps

These indicate the present status of the search dial and SHTL/SLOW switch.

JOG: This lights when the unit is in the JOG mode.

SHTL: This lights when the unit is in the SHTL mode.

SLOW: This lights when the unit is in the VAR (variable) mode.

㉖ SHTL/SLOW switch

This selector switch is set when the search dial is used for SHTL or SLOW applications.

㉗ REV/STILL/FWD lamps

One of these lamps lights depending on the operation of the search dial.

REV: This lights when the dial is turned counterclockwise and the tape travels in the REV direction provided that the lamp in the search button has lit.

STILL: This lights in the JOG mode while the dial is kept stationary, and the tape stops travelling provided that the lamp in the search button has lit.
It lights in the SHTL mode provided that the dial is at the STILL position.

FWD: This lights when the dial is turned clockwise, and the tape travels in the FWD direction provided that the lamp in the search button has lit.

㉘ Search dial

This is used to search for the edit points.

Each time it is pressed, the mode is alternately set to shuttle or jog, and one of the JOG, SHTL and SLOW lamps lights. When the power has been turned on, the dial will not function until it has first returned to the STILL position.

Shuttle mode: When the dial is turned and stopped at a particular position while the SHTL/SLOW switch is at SHTL, the tape can be played back at the speed corresponding to the dial's rotary angle position. A still picture appears at the dial's centre position.
When the dial is turned all the way counterclockwise with the SHTL/SLOW switch at SLOW, the tape speed is set to –4× normal speed, when it is set to the centre position, a still picture is produced, and when it is turned all the way clockwise, the tape speed is set to +4× normal speed. The maximum speed for SLOW can be set using setup menus No. 317 (VAR FWD MAX) and No. 318 (VAR REV MAX).

Jog mode: The dial clickstops are cleared, and the tape is played back at the speed corresponding to the speed at which the dial is turned. The maximum speed can be selected using the setup menu No. 320 (JOG FWD MAX) and No. 321 (JOG REV MAX) settings.

ENGLISH

<Front Panel Centre Section>

㉙ PREROLL button

This is used for feeding and cueing the tape for manual editing.
When it is pressed, the tape travels to the preroll point where it stops.
The preroll time can be set on the setup menu No. 000 (P-ROLL TIME).
When this button is pressed while the IN or OUT button is held down, the tape can be cued to the IN or OUT point entered.
When the AUTO ENTRY on the setup menu No. 311 is set to “ENA”, IN point has been entered at the point where the PREROLL button is pressed even if the IN point has not been entered.

㉚ AUTO EDIT button

Automatic editing is executed when this is pressed after an edit point has been entered.
When the AUTO EDIT button is pressed though the IN point has not been entered, automatic editing is executed using the point at which the button was pressed as the IN point.

㉛ PREVIEW/REVIEW buttons

PREVIEW: When this is pressed after an edit point has been entered, the tape travels, editing is not performed, and the rehearsal can be activated on the screen connected to the recorder.
If it is pressed when the IN point has not been entered, the point at which the button was pressed is entered as the IN point, and preview is executed accordingly.

REVIEW: If this is pressed after a block has been edited, the now edited block can be played back and monitored on the screen connected to the recorder.

㉜ IN (A IN)/SET/OUT (A OUT) buttons

When the SET button is pressed while the IN (A IN) or OUT (A OUT) button is held down, the IN or OUT point is entered.
The A IN and A OUT buttons are used to enter audio IN and OUT points which are different from the corresponding video points for audio split editing.
While an IN or OUT point is being entered, the lamp in the IN or OUT button corresponding to the point being entered lights.
When this button is pressed after a point has been entered, the IN or OUT point value appears on the counter display. When the IN or OUT button is pressed together with the RESET button, the IN or OUT point entry is cleared.

㉝ TRIM buttons

These buttons are used to trim IN or OUT point finely.
When the “+” or “–” button is pressed while the IN or OUT button is held down, the entered edit point can be trimmed in 1-frame increments. When the “+” button is pressed, the tape is advanced by one frame; when the “–” button is pressed, it is rewound by one frame.

㉞ ASSEMBLE button

This is pressed for assemble editing.
The button is self-illuminating, and it is set ON (lamp lights) when it is pressed once and OFF (lamp goes off) when it is pressed again.

㉟ INSERT buttons

Press one of these five buttons to select the input signals to be edited during insert editing.
The buttons are self-illuminating, and they are set ON (lamp lights) when they are pressed once and OFF (lamp goes off) when they are pressed again.

㊱ Counter display

This displays the TC and CTL count values, on-screen information and other messages.

<Front Panel Centre Section>

㊲ Time code buttons

These are used to set the TC or UB value.

SHIFT: When setting the TC or UB value, first press this button to stop the data running. Change the digit now flashing on the display.
Each time the button is pressed, the flashing moves to the right by one digit, and when it reaches the right-most digit, it returns to the left-most digit.
When it is kept depressed, the flashing moves consecutively.

ADJ: This is used to change the numeral of the digit now flashing on the display.
When the button is pressed once, the number is incremented by 1, and when it is kept depressed, the number is incremented consecutively.

START: This enters the data which has been changed by the SHIFT and ADJ buttons.
Also, Pressing this button when the TC or UB value are not set enables the TCG or UBG setting values to be confirmed.

RESET: When this button is pressed in the CTL mode, the display is reset to “00:00:00:00”.
In the CTL mode, the entered edit points are cleared.
In the TC/UB mode, the generator is reset when the button is pressed together with the SHIFT button.

㊳ Warning lamp

This lights to warn the operator of a particular item.

㊴ Cassette insertion display lamp

This lights when a cassette has been inserted into the unit.

㊵ Consumer cassette insertion display lamp

This lights when a cassette recorded on a consumer DV device has been inserted.

㊶ SCH lamp

This lights when the SCH of the external sync signal is within a specific range.

㊷ CF lamp

This lights when the colour framing is locked.

㊸ Level meters

These indicate the PCM audio signal CH1/CH2, CUE track signal and video signal levels.
The audio signal indicates the output signal levels.
The video signal indicates the input signal levels.

㊹ Input/output level controls*

These are used to adjust the recording and playback levels of the PCM audio signal CH1/CH2 and CUE track signals and the recording level of the composite video signals.
Each control located on the upper level is for adjusting the recording level, and each control located on the lower level is for adjusting the playback level.
These are “pull for variable” controls which means that they enable adjustment only when they have been pulled up. The signals levels are set to the unity value (preset value) when the controls have been pushed down.

㊺ Headphones jack

The sound being recorded, played back or edited can be monitored on stereo headphones when they are connected to this jack.

* The input levels are always fixed (at –18 dB) when “ON” has been selected as the setup menu No. 722 (INT SG) setting

ENGLISH

<Front Panel Centre Section>

㊻ Volume control

This is used to adjust the headphones volume and the monitor output volume.

Whether the headphones output and monitor output volumes are to be linked or kept separate can be set on the setup menu No. 708 (MONI OUT). (Note that the headphones output volume is normally linked.)

When the volumes are kept separate, the monitor output is set to the unity value (preset value).

㊼ MONITOR SELECT switches

These are used to select the audio signals output to the monitor L/R channels.

Each time the “L” button is pressed, the signals output to the monitor L channel are selected in turn in the following order: CH1, CH2, CUE and back to CH1.

Each time the “R” button is pressed, the signals output to the monitor R channel are selected in turn in the following order: CH1, CH2, CUE and back to CH1.

The L or R lamp on the level meter display lights to indicate which signal is now being selected. (When the unit is set to “AUTO 1” or “AUTO 2” in No. 713 (MONI CH SEL) on the setup menu, then the display will change according to the monitor output.)

㊽ METER (FULL/FINE) selector switch

This switch is used to select the scale unit display mode for the audio level meters.

FULL mode: Standard scale units (ranging from –∞ to 0 dB) are used.

FINE mode: The scale is divided up into 0.5 dB increments.

<Front Panel Bottom Section>

㊾ ENCODER CONTROL switch

This selects whether the adjustments to the video output signals are to be performed by the unit or by an external encoder/remote controller.

REMOTE: The adjustments to the video output signals are performed by the external encoder/remote controller.

LOCAL: The adjustments to the video output signals are performed by the unit.

㊿ VIDEO LEVEL control and switch

When the ENCODER CONTROL switch is at LOCAL, the video level can be adjusted.
When it is at PRESET, the video level is set to the unity value (0 dB).
When it is at MANUAL, the video level can be adjusted using this control.

51 CHROMA LEVEL control and switch

When the ENCODER CONTROL switch is at LOCAL, the chroma level can be adjusted. When it is at PRESET, the chroma level is set to the unity value (0 dB). When it is at MANUAL, the chroma level can be adjusted using this control.

52 BLACK LEVEL control and switch (Composite output only variable.)

When the ENCODER CONTROL switch is at LOCAL, the black level can be adjusted. When it is at PRESET, the black level is set to the unity value (0 IRE). When it is at MANUAL, the black level can be adjusted using this control.

53 CHROMA PHASE control and switch (Composite output only variable.)

When the ENCODER CONTROL switch is at LOCAL, the chroma level can be adjusted. When it is at PRESET, the chroma phase is set to the unity value (0°). When it is at MANUAL, the chroma level can be adjusted using this control.

54 CF switch

This selects whether the playback framing is to be locked in 8/4-field increments or 2-field increments.

8F/4F: The framing is locked in 8/4-field increments.

2F: The framing is locked in 2-field increments.

Switching to 8F or 4F is enabled by the SETUP menu No. 107 (CAP.LOCK) setting.

55 SYNCHRONIZE switch

This selects whether to provide phase synchronization between two decks.

ON: Phase synchronization is provided. Error-less editing can be performed.

OFF: Phase synchronization is not provided. The edit point will be off by several frames, but editing can be performed quickly.

56 TC generator switch

REGEN: When the REGEN/PRESET switch is at REGEN, the internal time code generator is synchronized with the time code which the time code reader read from the tape. Whether to set TC or UB to REGEN can be selected at the setup menu No. 503 (TCG REGEN).

PRESET: When the REGEN/PRESET switch is at PRESET, presetting is enabled by the controls on the operation panel or by remote control.

REC RUN: The time code runs only during recording when the RUN MODE switch has been set to REC. The time code runs constantly when the REGEN/PRESET switch is set to REGEN.

FREE RUN: The time code runs regardless of the operation mode as long as the power is being supplied when the RUN MODE switch has been set to FREE.

<Front Panel Bottom Section>

⑰ REC INHIBIT switch

This selects whether to enable or inhibit the recording on the cassette tape.

ON: The recording on the cassette tape is inhibited.
The REC INHIBIT lamp on the front panel now lights.

OFF: The recording on the cassette tape is enabled provided that the cassette's accidental erasure prevention mechanism has been set to the recording enable position.

⑱ MENU button

When this is pressed, the setup menu appears on the TV monitor using VIDEO OUT 3 connector, and the setup menu No. appears on the display.
When it is pressed again, the setup menu setting mode is exited and the original operating mode is restored.

⑲ SET button

When this is pressed, the data which has been set on the setup menu is entered. After data entry, the setup menu setting mode is exited and the original operating mode is restored.

⑳ DIAG button

When this is pressed, VTR information is displayed. When it is pressed again, the original display is restored.
There are two types of VTR information: "HOURS METER" information and "WARNING" information. Switching between these types is enabled by pressing the search button.
Indicated on the "HOURS METER" screen are the power-on time, drum rotation time, tape travel time, loading count, etc.
Indicated on the "WARNING" screen are the warnings.

Connector area

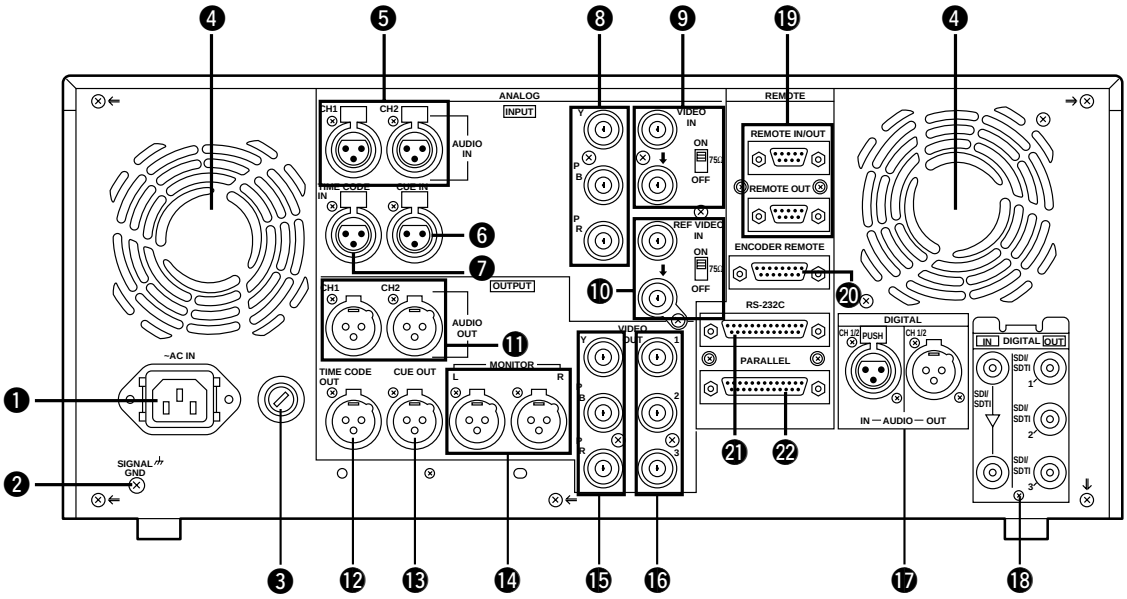

<Connector area>

❶ AC IN connector
This is for connecting the unit to the power outlet using the power cord provided.

❷ SIGNAL GND terminal
This terminal is connected to the signa unit which is connected to the unit in order to reduce noise. It is not connected to ground for safety purposes.

❸ Fuse holder
This contains a fuse.

❹ Fan motor
This is for cooling the unit.
The Ⓦ lamp lights when trouble has caused the fan motor to stop. If the unit is still operated in the warning status, the temperature inside the deck will rise, and when it exceeds the safety temperature, all the unit's operations will be shut down.

❺ ANALOG AUDIO IN connectors
These are the analogue audio input connectors.

❻ CUE IN connector
The analogue signal to be recorded on the CUE track is supplied to this connector. The audio signals from a microphone can also be recorded by selecting the –60 dB input mode on the setup menu No. 702 (CUE IN LV).

❼ TIME CODE IN connector
This is the connector for recording the external time code on the tape.

❽ ANALOG COMPONENT VIDEO IN connector
The analogue component video signal is supplied to this connector.

❾ ANALOG COMPOSITE VIDEO IN connectors and 75Ω termination switch
The analogue composite video signal is supplied to these two connectors which are connected in a loop-through configuration. When the termination is required, set the switch to ON.

❿ REF VIDEO IN connectors and 75Ω termination switch
These are the input connectors for the reference video signals. When the termination is required, set the switch to ON.

⓫ ANALOG AUDIO OUT connectors
The analogue audio signals are output from these connectors.

⓬ TIME CODE OUT connector
The playback time code is output from this connector during playback.
During recording, the time code generated by the internal time code generator is output.

⓭ CUE OUT connector
The analogue signal recorded on the CUE track is output from this connector.

⓮ MONITOR OUT connector
During playback, the playback signals from the CUE track or PCM audio signal CH1/CH2 are output from this connector.

<Connector area>

⓯ ANALOG COMPONENT VIDEO OUT connector

The analogue component video signal is output from this connector.

⓰ ANALOG COMPOSITE VIDEO OUT connectors

The analogue composite video signals are output from these connectors.

The video signal with signals superimposed on it can be output from the VIDEO OUT3 connector.

The superimpose function can be set ON or OFF on the setup menu No. 006 (SUPER).

⓱ DIGITAL AUDIO IN/OUT connector

This I/O connector is for digital audio signals which comply with the AES/EBU standard.

⓲ SERIAL DIGITAL COMPONENT AUDIO/VIDEO IN/OUT connector (optional AJ-YA750P interface board required)

This I/O connector is for digital component audio and video signals which comply with the EBU Tech. 3267-E standard.

The connectors are known by different names when the AJ-YAC850P SDTI/SDI board (option) is used. For further details, refer to the operating instructions of the AJ-YAC850P board.

⓳ Remote control connectors

The unit can be controlled from an external source by connecting the unit with another unit or an external controller.

There are two remote control connectors, one for IN/OUT uses and the other for OUT uses.

IN/OUT: For connection with an external controller.
For connection with deck-to-deck operation.

OUT: For connection with parallel running operations.

⓴ ENCODER REMOTE connector

The external encoder/controller is hooked up to this connector when the video output signal and other settings are to be adjusted from an external source.

㉑ RS-232C connector

㉒ PARALLEL REMOTE connector

This is used when operating the unit from an external source.

ENGLISH

Connections when one unit is used

Set the CONTROL switch on the front panel to LOCAL.

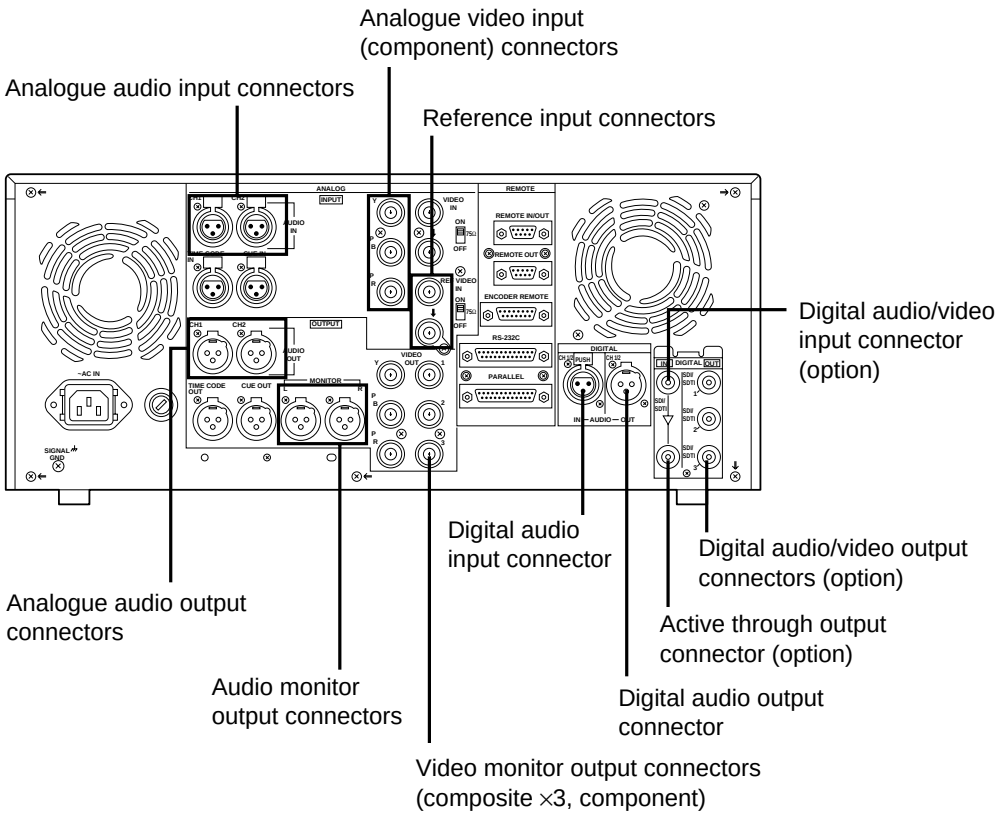

Connections when 2 units are used (deck to deck)

Source machine: • Set the CONTROL switch on the front panel to REMOTE.

Recorder: • Set the CONTROL switch on the front panel to LOCAL.

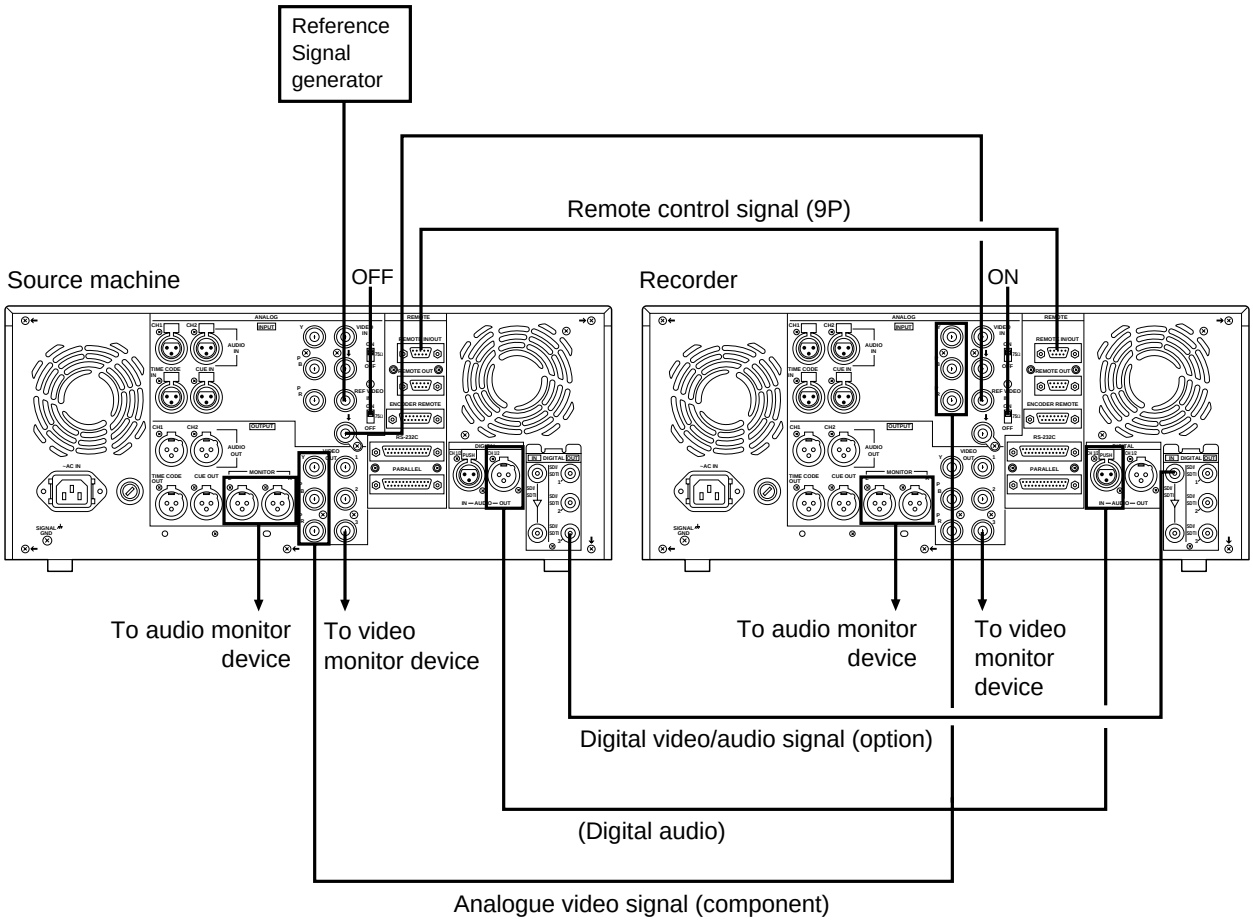

ENGLISH

Connections with editing controller

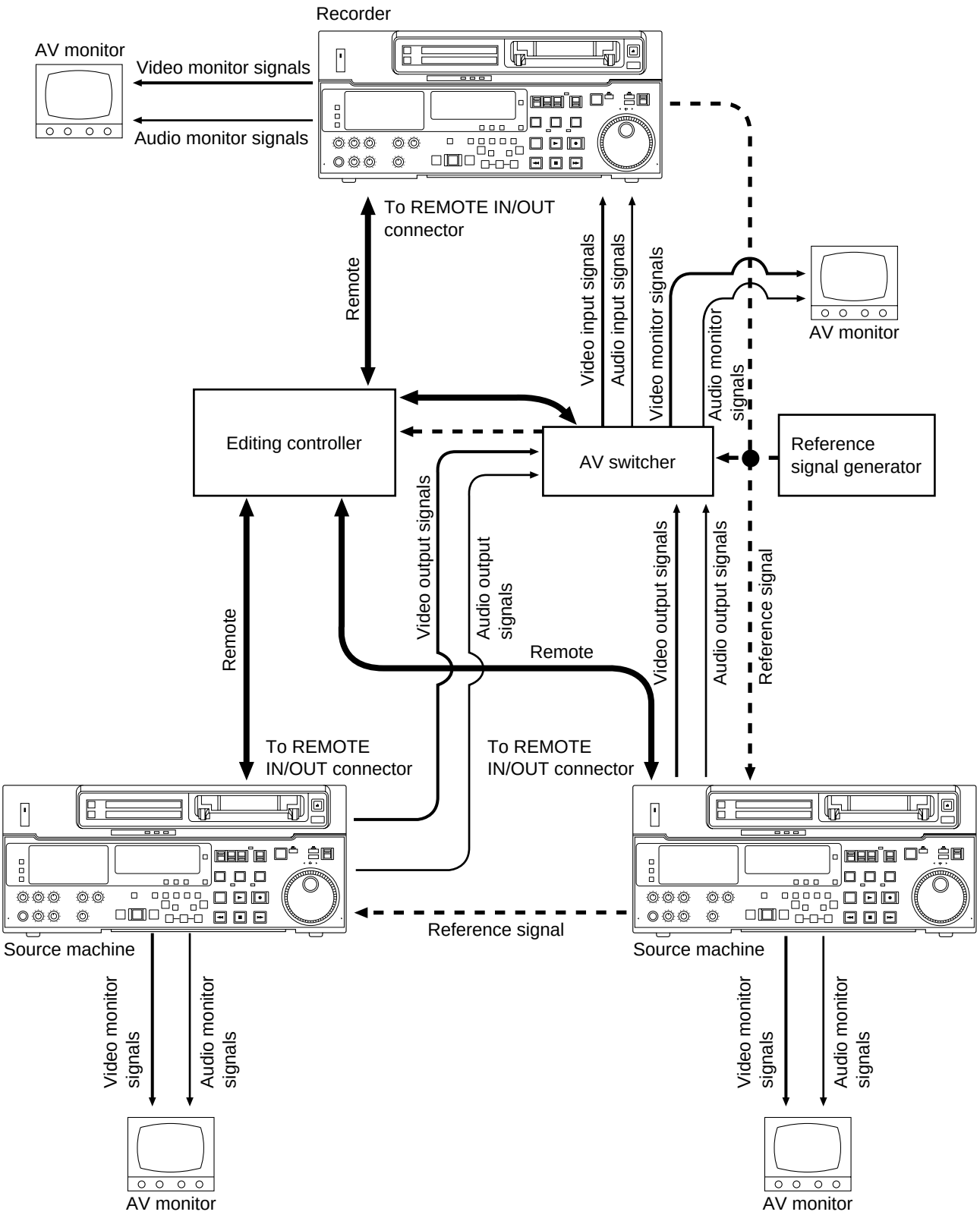

<Note>
When an editing controller made by CMX is used, support must be provided at the editing controller side.

Connections for adjusting video output (encoder output) signals

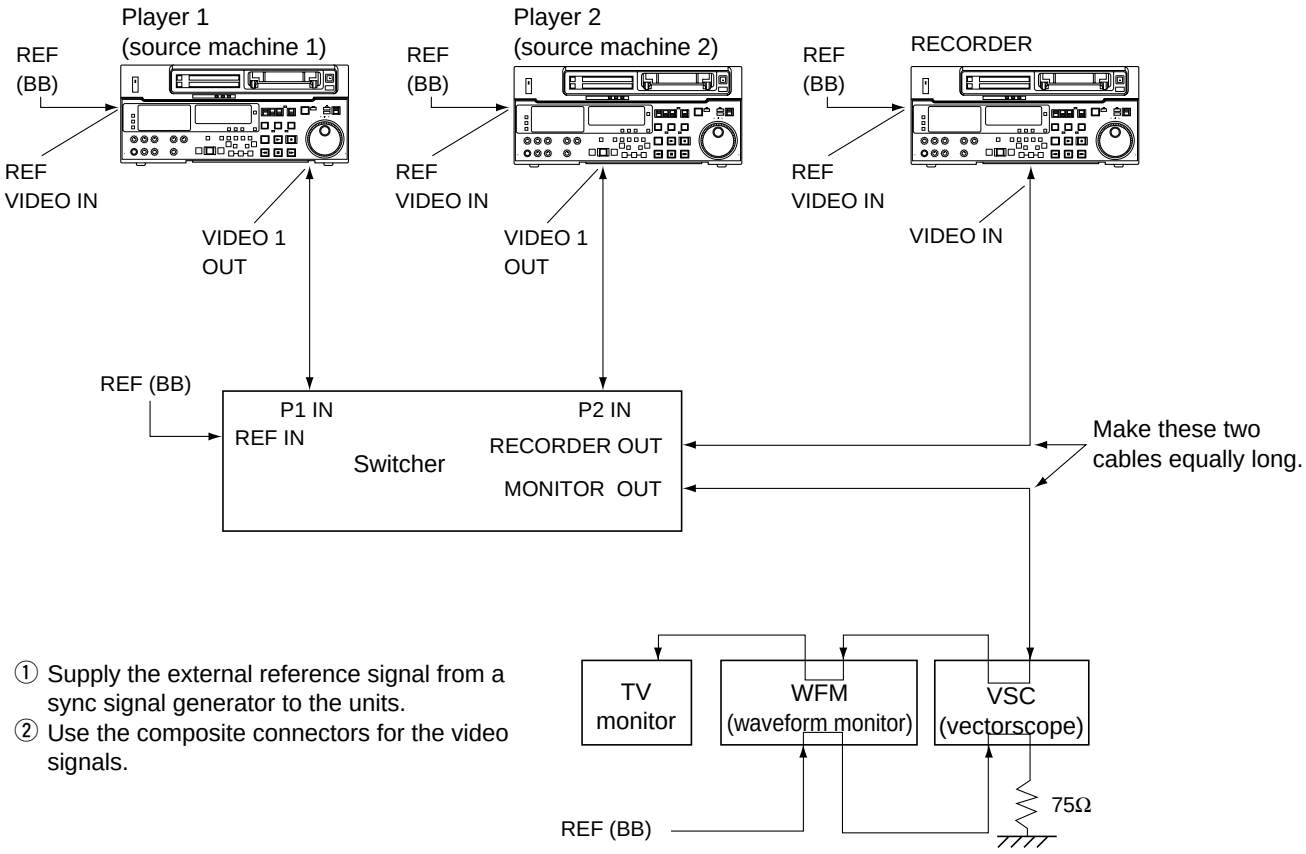

① Supply the external reference signal from a sync signal generator to the units.
② Use the composite connectors for the video signals.

ENGLISH

Type	Description
Consumer cassette (S cassette)	Tape designed exclusively for the camcorders used by consumers in general. Only playback is possible using the optional cassette adaptor. However, please note that long-play cassette tapes (80-minute standard/ 120-minute LP mode) cannot be used. **Use of Panasonic consumer DV cassette tapes is recommended.** Note that inserting a cassette tape without using the cassette adaptor can damage the unit.
M cassette	Recording/playback tape with a maximum capacity of 66 minutes. (AJ-P12MP, AJ-P24MP, AJ-P33MP, AJ-P46MP, AJ-P66MP)
L cassette	Recording/playback tape with a maximum capacity of 184 minutes. (AJ-P34LP, AJ-P66LP, AJ-P94LP, AJ-P126LP, AJ-5P92LP)

Align the cassette with the centre of the insertion slot and push it in gently. The cassette tape is loaded automatically.

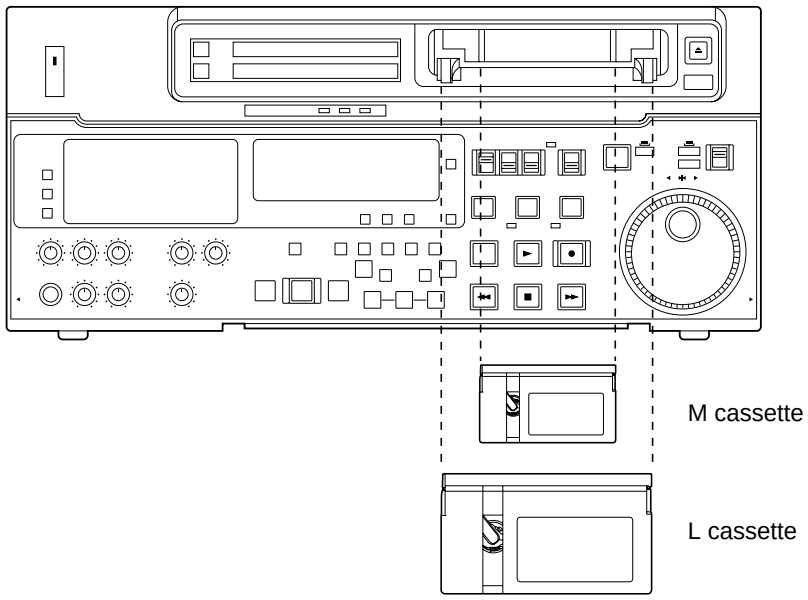

<Note>
For AJ-5P92LP cassette tapes recorded using the DVCPRO (25 Mbps) mode, use a VTR supporting DVCPRO (25 Mbps) 184 minute tapes.

<Cautions when playing back consumer DV tapes and DVCAM tapes>
- Consumer DV tapes and DVCAM tapes can be used for playback only.
- Consumer DV tapes which have been recorded in the LP mode cannot be played back.
- When materials which have been recorded on consumer DV tapes or DVCAM tapes are to be edited, record them onto a DVCPRO tape or tape of any other broadcasting VTR for use.
- Recordings cannot be made on consumer DV tapes and DVCAM tapes: this means that all functions related to recording, REC operation, editing selection and execution, TAPE/EE switching and other such operations are prohibited.
- The maximum transport speed for consumer DV tapes and DVCAM tapes is 32 times the normal tape speed.
- The maximum time for the STILL TIMER when consumer DV tapes or DVCAM tapes are used is set to 10 seconds, and the total STEP FWD time when the machine has been left standing in the STILL status is set to 1 minute.
- Slow-motion playback of consumer DV tapes and DVCAM tapes is not possible.
- In order to protect your tapes, it is recommended that repeated cue-up in the same location on a consumer DV tape or DVCAM tape be avoided as far as possible.
- Finally, check out the cautionary items for setup menu item No. 108 “FORMAT SEL”.

Switching on the power/inserting the cassette

Before starting to operate the unit, check whether the equipment has been connected properly.

1 Turn on the power.

2 Check that the AUTO OFF lamp is off.
When condensation has formed or some other trouble has occurred, the AUTO OFF lamp lights, and all operations are disabled.

3 Insert the cassette tape.
Insert the tape at its proper position without force.

4 Check that the STOP lamp is on.
When the tape is inserted, the cylinder rotates automatically, the tape is loaded and the unit goes into the stop mode. The EJECT lamp goes off.

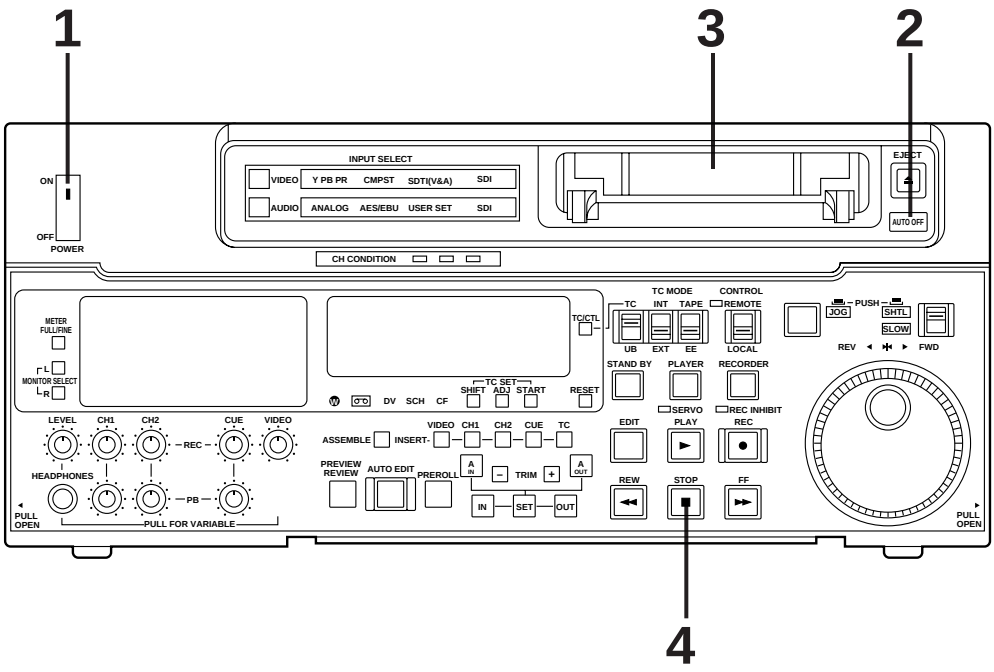

STOP/STAND BY mode

1 When the STOP button is pressed, the unit goes into the stop mode. The STOP lamp lights and the tape stops travelling.

- In order to protect the tape, the unit goes into the standby OFF mode after the time set by setup menu No. 400 (STILL TIMER) has elapsed. When the STOP, REW, FF or PLAY button is pressed, the unit will go into the appropriate mode.

2 When the STAND BY button is pressed, the unit goes into the standby ON/OFF mode. When the button's lamp is lit, the unit is in the standby ON mode.
When the button is pressed during the stop mode, the unit goes into the standby OFF mode and half-loading mode and the lamp goes off.
When the button is pressed during the standby OFF mode, the unit goes to the standby ON mode.

Still Timer Setting

In order to protect the tape and VTR helical heads, it is recommended that the Still Timer be set for automatic tape protection mode in 30 seconds or under.
Page 68 indicates the settings for menu item 400-Still Timer set. Still Timer settings 4 and below will best protect the tape.

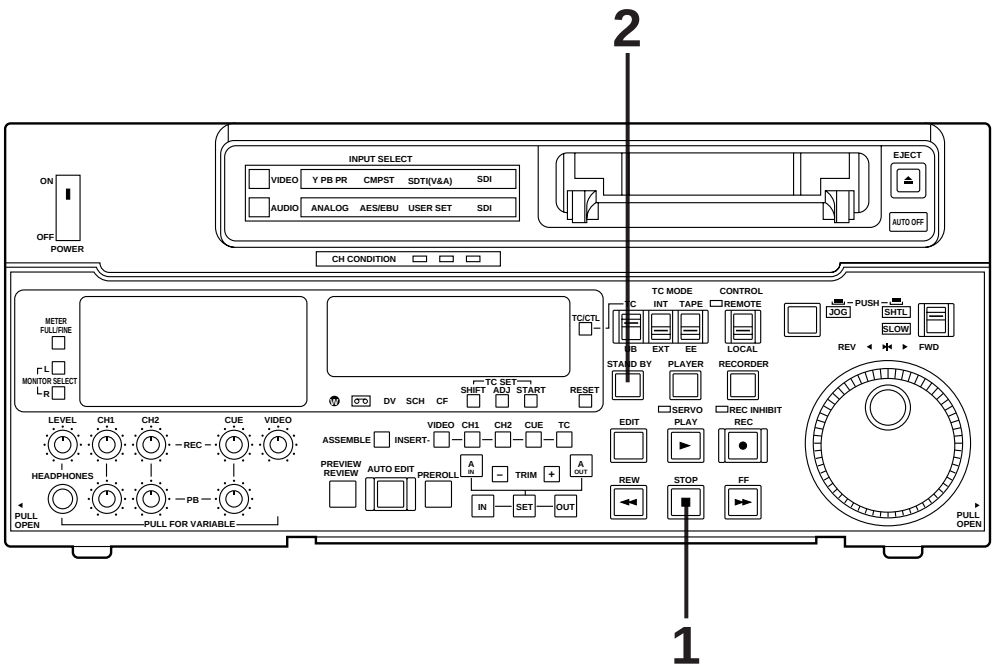

1 Set the accidental erasure prevention tab on the cassette tape to the “recording” position and insert the tape.

2 Press the STOP button to place the unit in the stop mode.

3 Set the TAPE/EE switch to EE.
EE images now appear on the TV monitor.

4 Check that the REC INHIBIT lamp is off.
If this lamp is lit, set the REC INHIBIT switch to OFF.

5 Select the video and audio input signals and adjust their levels.

5-1 Selecting video/audio input signals

1 Connect the signals to be recorded.

2 Select the input signals using the INPUT SELECT switches on the front panel.
The input signals corresponding to the lit lamps have been selected.

5-2 Adjusting the video level

1 Normally, the adjustment control ㊹ for the video input level should be pressed in. (unity value)
The video signals will be recorded at the proper level.

2 To adjust the recording level, pull out the adjustment knob and adjust in the +3 dB to –3 dB range.

5-3 Adjusting the audio level

1 Adjust the audio input signal levels of the analogue audio CH1/CH2 signals and analogue cue signal. Keep the audio input/output level controls ㊹ pushed in (unity value).
The audio signals will be recorded at the proper level.

2 To adjust the recording level, pull out the controls and adjust them. With the CUE signal, adjust the control in such a way that –20 dB will not be exceeded.

6 Press the REC and PLAY buttons together. The REC and PLAY lamps light, and recording commences.

7 To end the recording, press the STOP button.
Recording is ended, and the unit goes into the stop mode.

<Notes>

- Check that the SERVO lamp is lit during recording. If it flashes or if it is off, the images played back will be disturbed.
- Only the analogue composite video input signals can be adjusted. (The digital video and analogue component input signals cannot be adjusted.)
- The sound and pictures to be recorded are offset from the playback pictures by 5 frames and recorded. When, for instance, recording sound at a particular timing while the playback pictures are monitored, the sound to be recorded will be recorded at a position which is offset from the playback pictures by 5 frames.

1 Insert the cassette tape, and place the unit in the stop mode.

2 Press the PLAY button.
Regular playback is now commenced.

3 Adjust the audio playback level.
Pull out the audio level controls and turn them clockwise or counterclockwise to adjust the levels. Normally, they are kept in the pushed-in state (unity value).

4 To end playback, press the STOP button.
The VTR now goes into the stop mode.

<Note>
Check that the SERVO lamp is lit during playback. If it flashes or if it is off, the images played back will be disturbed.

Jog/shuttle

Jog mode

1 Push the search dial to the “in” position.
Be sure that the JOG lamp lights.

2 Rotate the search dial.
The dial’s clickstops are cleared, and the tape is played back at the speed corresponding to the speed at which the dial is turned. The maximum speed can be selected using the setup menu No. 320 (JOG FWD MAX) and No. 321 (JOG REV MAX) settings. When the dial rotation is stopped, a still picture appears. The playback picture is noise-free.

3 To transfer from the jog mode to another mode, press the appropriate button.

Shuttle mode

1 Push the search dial to release it from the “in” position. The SHTL lamp lights, and the unit goes into the shuttle mode.
• Immediately after the power has been turned on, rotate the search dial and set it to the centre position.

2 Set the SHTL/SLOW switch to SHTL or SLOW.

3 Rotate the search dial.
When the SHTL/SLOW switch has been set to SHTL, the playback picture speed is varied from 0 to ±60× normal speed depending on the position of the dial. The playback picture speed can be switched to ±16×, ±32× and ±60× normal speed with setting menu No. 101 (SHTL MAX).
The dial’s centre position is a clickstop where a still picture appears as the playback image. When the SHTL/SLOW switch has been set to SLOW, the playback picture speed is varied from –4 to +4× normal speed depending on the position of the dial. The maximum speed can be selected using the setup menu No. 317 (VAR FWD MAX) and No. 318 (VAR REV MAX) settings. However, noise appears at speeds other than –0.43 to +1× normal speed.
The dial’s centre position is a clickstop where a still picture appears as the playback image. The playback picture is noise-free.

4 To transfer from the shuttle mode to another mode, press the STOP button or other button.

<Note>
When the unit leaves the factory, its operation is set up so that it will be transferred to the shuttle or jog mode when the search dial is rotated. If it is inconvenient for operation to be transferred to the variable-speed mode directly, it can also be transferred through the search button.
Set setting menu No. 100 (SEARCH ENA) to KEY.

ENGLISH

1 Select the editing mode.
ASSEMBLE: For assemble editing.
INSERT: For insert editing.

2 Select the editing channel.
In the case of insert editing, press the channel button corresponding to the signals to be edited, and check that its lamp is on.

3 Press the PLAY button.

4 Search for the position where the editing is to be commenced (IN point) while viewing the TV monitor, and press the PLAY and EDIT buttons together at the IN point.

5 Press the STOP or PLAY button at the position where editing is to be completed (OUT point) while viewing the TV monitor. The unit goes into the stop mode, and editing is completed.

<Note>
The sound and pictures to be recorded are offset from the playback pictures by 5 frames and recorded. When, for instance, recording sound at a particular timing while the playback pictures are monitored, the sound to be recorded will be recorded at a position which is offset from the playback pictures by 5 frames.

Preroll

1 Press the PREROLL button.
The VTR now performs the preroll operation.
- When the edit IN point has been entered, the tape is rewound from the edit IN point for the duration set by setting menu “000,” and the unit then goes into the stop mode.
- When the edit IN point has not been entered, the tape is rewound for the duration set by setting menu “000” from the position where the button was pressed, and the unit then goes into the stop mode.

<Notes>
- The time code or CTL signal must be continuously recorded between the edit IN point and preroll point.
- When the IN point has not been entered, whether to enter the IN point and perform preroll or to perform preroll without entering the IN point can be selected at setting menu No. 311 (AUTO ENTRY).

Automatic editing (Deck to Deck)

Editing refers to the job of using a prerecorded tape to produce a complete recording by joining together separate cuts and deleting unnecessary parts.

The basic steps taken for editing are as follows.

1. Set the CONTROL switch to REMOTE on the player and to LOCAL on the recorder.
2. Select the editing mode.
3. Enter the edit points of the recorder and player.
4. Check and modify the edit points.
5. Check (Preview) before proceeding with the editing.
6. Proceed with the editing.
7. Check (Review) the recording that has resulted from the editing.

Switch settings and adjustments

When the unit is used as the recorder:

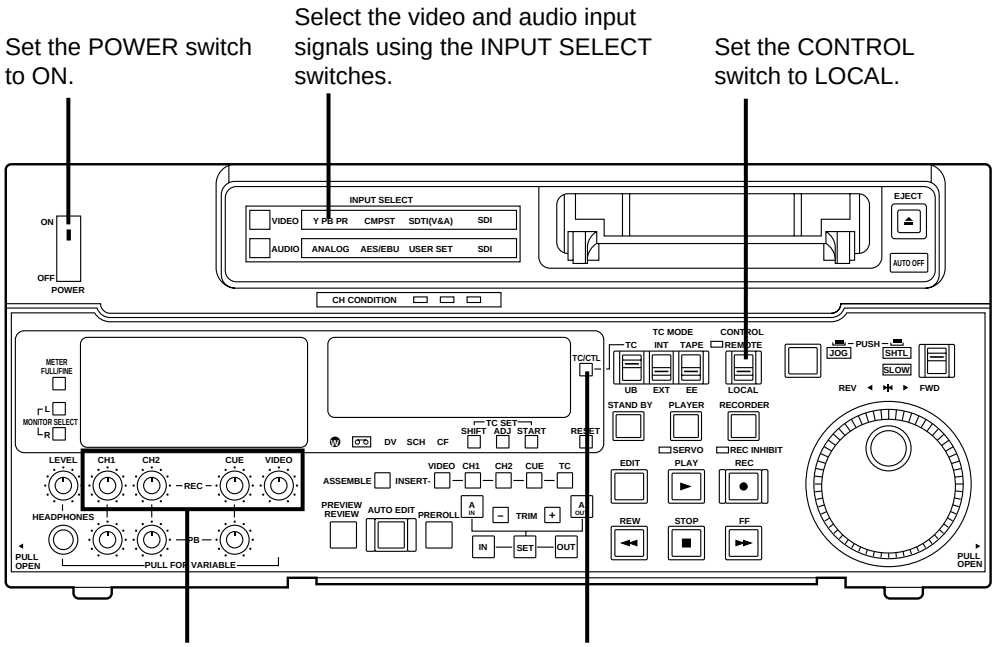

When the unit is used as the player:

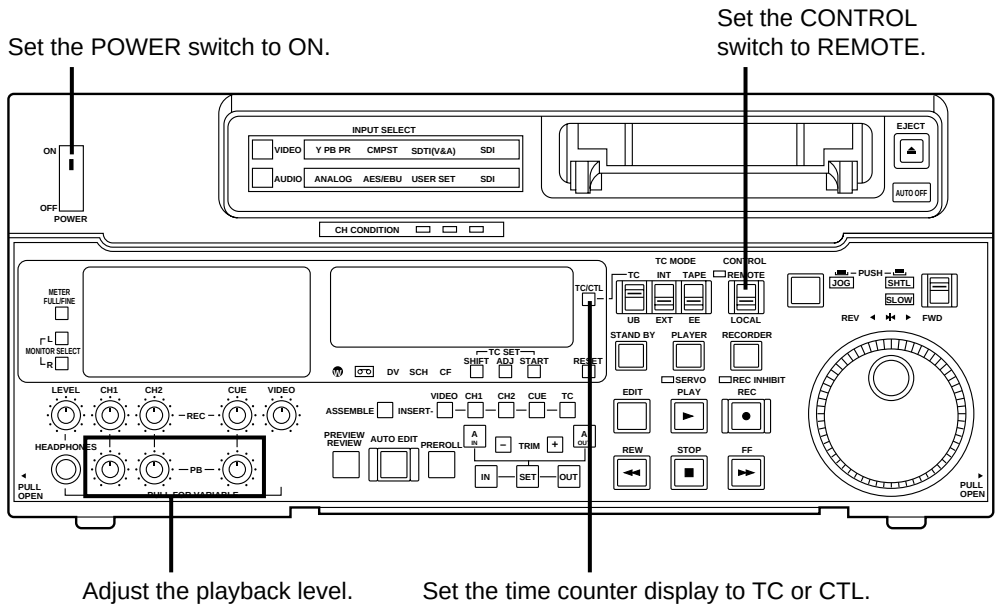

Select the editing mode

1 Select the editing mode.
For assemble editing, press the ASSEMBLE button.
For insert editing, press the INSERT button.

ASSEMBLE: The assemble editing mode (in which cuts are joined together) is established.

INSERT: The insert editing mode (in which cuts are inserted) is established.

2 Select the editing channel.
With assemble editing, the ASSEMBLE lamp lights.
With insert editing, press the button of the channel whose signals are to be edited and lights its lamp.

3 Select the VTR to be operated (this setting is performed when editing with 2 VTRs).
Press the PLAYER or RECORDER button to select the VTR.

PLAYER: Press this button to operate the player VTR and enter the edit points.

RECORDER: Press this button to operate the recorder VTR (this unit) and enter the edit points.

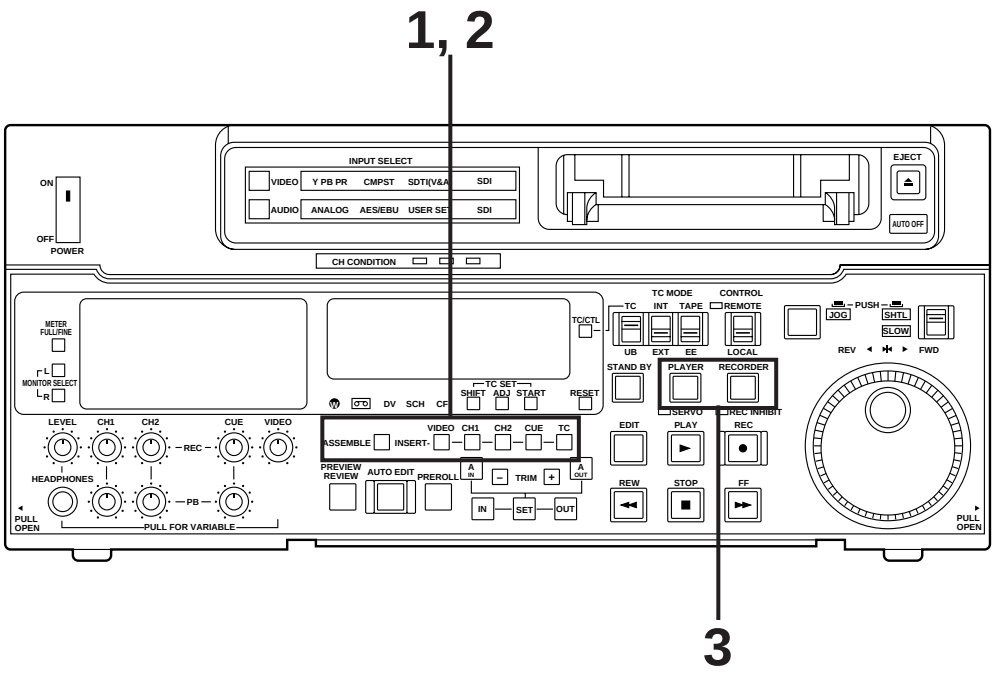

Entering the edit points

1 Search for the edit IN point by performing the jog or shuttle operation.
Establish the still picture mode at the desired position.
Refer to page 29 for details on the jog/shuttle operations.

2 Press the SET button while holding down the IN button.
The edit IN point is now entered.
The edit IN point value now appears on the display.

3 Search for the edit OUT point by performing the jog or shuttle operation.
Establish the still picture mode at the desired position.
Refer to page 29 for details on the jog/shuttle operations.

4 Press the SET button while holding down the OUT button.
The edit OUT point is now entered.
The edit OUT point value now appears on the display.

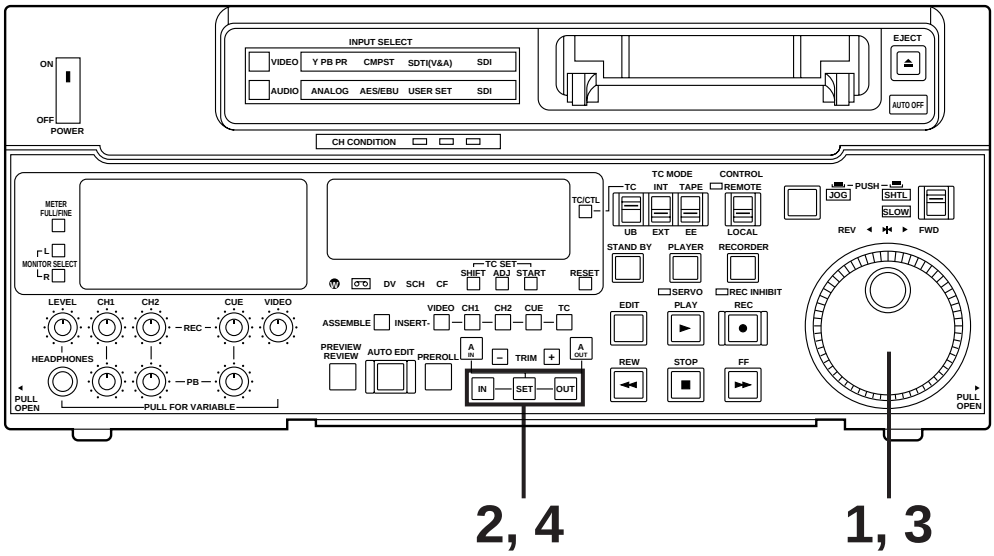

Match frame processing function
When using two VTRs for editing, a total of four edit points—namely, the player's IN and OUT points and the recorder's IN and OUT points—need to be entered. However, since the last edit point is calculated automatically, only three of these edit points must be entered.

Negative duration function
This function is used by combining setup menu No. 301 (IN/OUT DEL) and No. 302 (NEGA FLASH) described on page 64.

Checking the edit points

1 Press the IN (or OUT) button to check the edit point.
The value of the entered edit point appears on the display.

2 Press the PREROLL button while holding down the IN (or OUT) button to check the image at the edit point.
The tape is cued at the edit IN (or OUT) point, and the still picture mode at that point is displayed.
- The EE mode is established if the TAPE/EE switch has been set to the “EE” position when “STOP” has been selected for the setup menu No. 313 (AFTER CUE-UP).

3 Press and hold down the IN and OUT buttons together to check the edit duration.
The duration time appears on the display.

Calculating the duration
- When both edit points have been set, the duration between the two edit points.
- When only one edit point has been set, the duration between the set data and the current tape address.
- When neither edit point has been set, the duration of the previously edited interval.

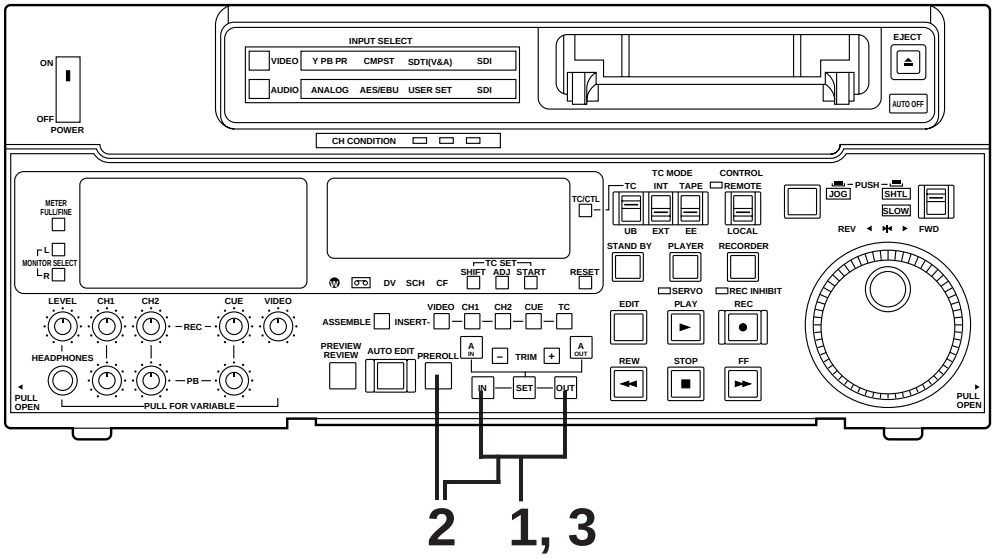

Modifying the edit points

1 Re-entering the edit points
Search for the new edit point by performing the jog or shuttle operation, and press the IN (or OUT) and SET buttons together to re-enter the edit point.

2 Modifying the edit point in frame units (trim function)
Press the TRIM button while holding down the IN (or OUT) button.
The edit point is put ahead by 1 frame each time the + button is pressed.
The edit point is put back by 1 frame each time the – button is pressed.

3 Resetting the edit points

3-1 Resetting both the edit IN and OUT points

• Press the RESET button.

3-2 Resetting either the edit IN or OUT point

• Press the RESET button while holding down the IN (or OUT) button.

<Notes>

• Edit points can be reset only in the CTL mode.
• An edit OUT point can be reset even while editing is in progress.
• The IN and OUT points are automatically reset during the eject mode.

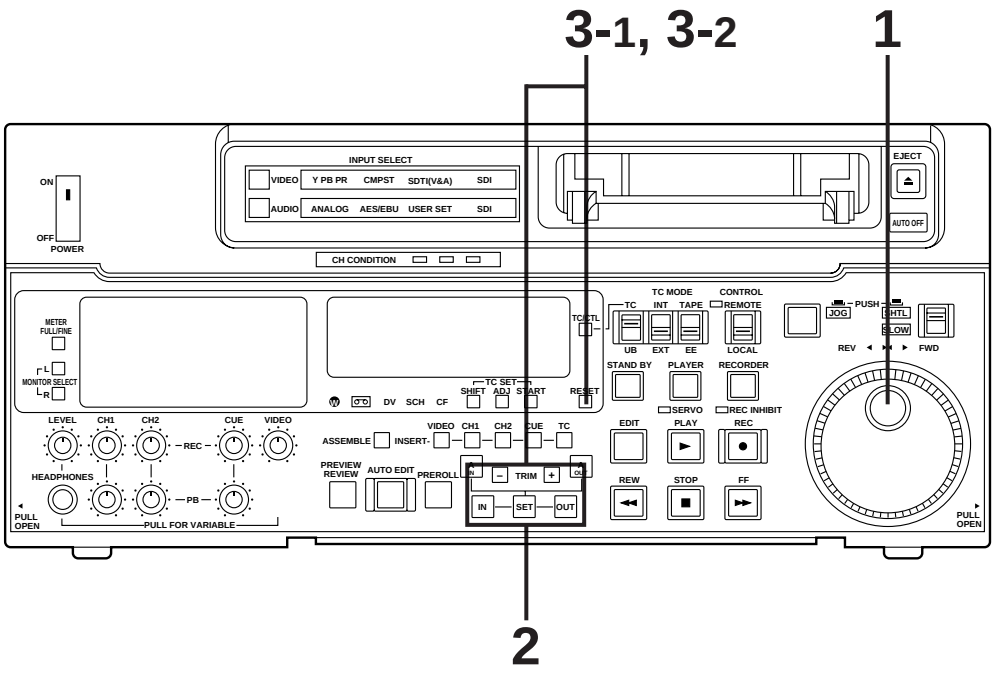

Preview

1 After the edit points have been entered, press the PREVIEW button.
Normal preview is now performed.

<Notes>

- If the edit IN point has not been entered, the position where the PREVIEW button was pressed will be entered at the edit IN point.
- To stop the preview at any time, press the STOP button.
- If the PREVIEW button is pressed again while preview is in progress after the IN point, preview will start again from the beginning.
- When the edit OUT point is reached, the unit automatically goes into the stop mode.

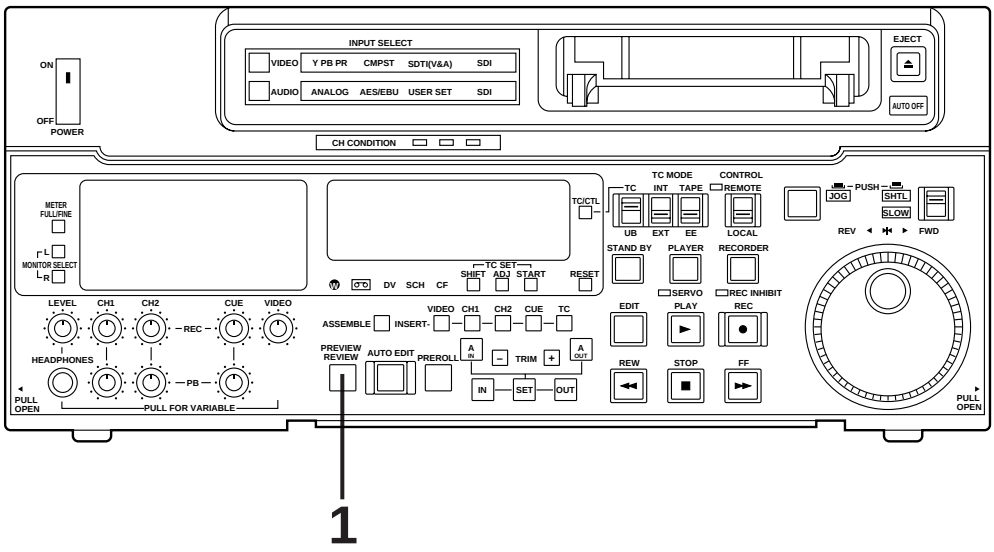

Executing automatic editing

1 Press the AUTO EDIT button.
Automatic editing is now performed.
- To stop the editing at any time, press the STOP button.
- When the edit OUT point is reached, the unit goes into the stop mode after postrolling.

Postroll
With assemble editing, editing continues for approx. 2 seconds even after the edit OUT point has been passed, the tape is rewound to the OUT point, and the unit goes into the stop mode.
With insert editing, the unit goes into the play mode after the edit OUT point has been passed, the tape is rewound to the OUT point, and the unit goes into the stop mode.

Retry function
If the AUTO EDIT button is pressed again after the STOP button has been pressed to stop the editing, editing will start again from the beginning.

Auto tag editing
If the AUTO EDIT button is pressed when the next edit point has not yet been entered upon completion of editing, the previous edit OUT point will be entered as the IN point, and editing is performed accordingly.
To release the auto tag mode, press one of the tape transport buttons (PLAY, etc.).

<Note>
The entered points are automatically cleared after editing is executed. However, the previous editing points can be recalled by pressing the TRIM+ (or TRIM–) and SET buttons together.

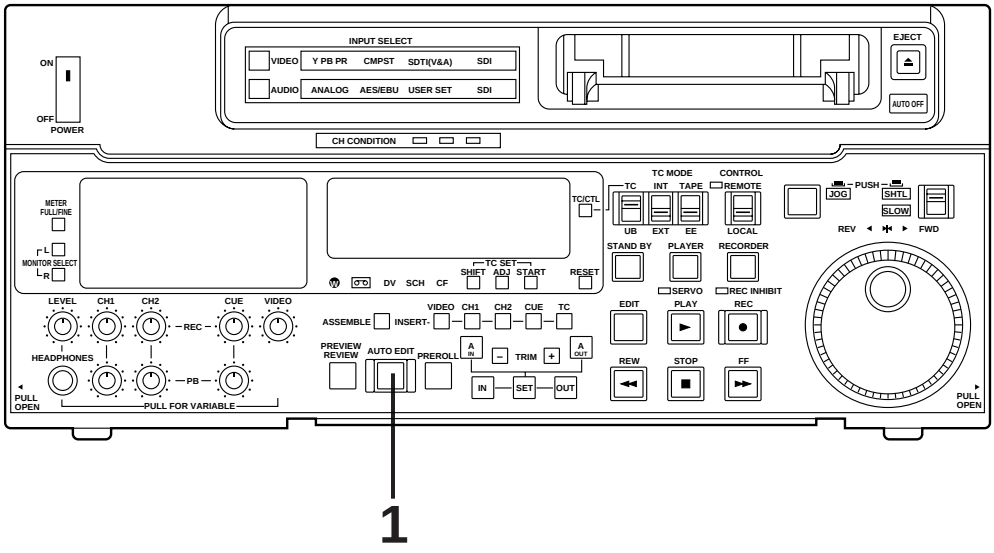

Review

1 Upon completion of the editing, press the REVIEW button.
The review is started in the recorder.
- To stop the review at any time, press the STOP button.
- When the edit OUT point is reached, the unit goes into the stop mode after postrolling.

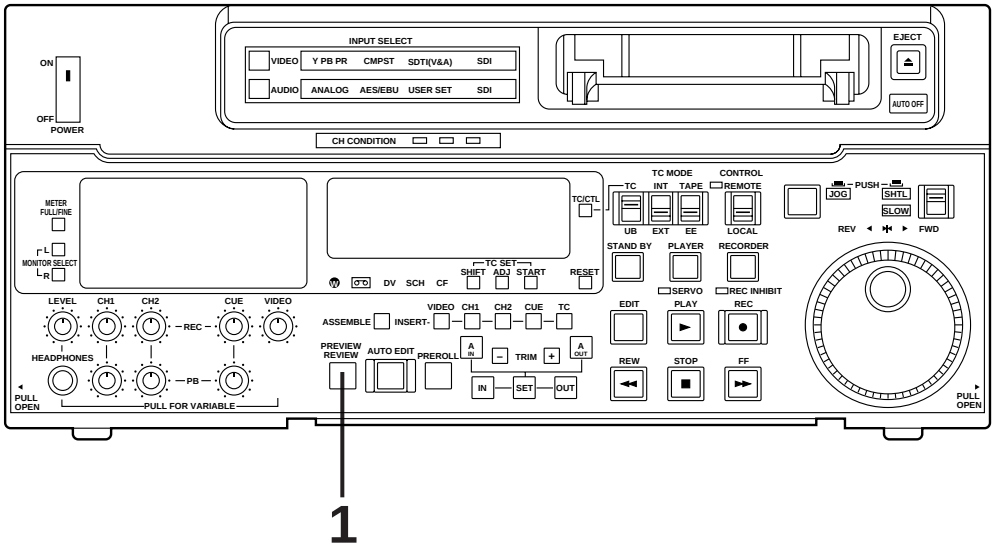

Split editing

Split editing refers to editing where the editing channels are switched while insert editing is in progress.

1 Perform insert editing.

2 Switch the editing channel.
When, for instance, sound from AUDIO CH2 is to be additionally inserted during video channel insert editing:

2-1 Press the AUDIO CH2 button during video channel editing.
The lamp in the button lights and the AUDIO CH2 sound is insert edited.

2-2 Press the AUDIO CH2 button again and turn off the lamp in the button.
This completes the AUDIO CH2 insert editing.

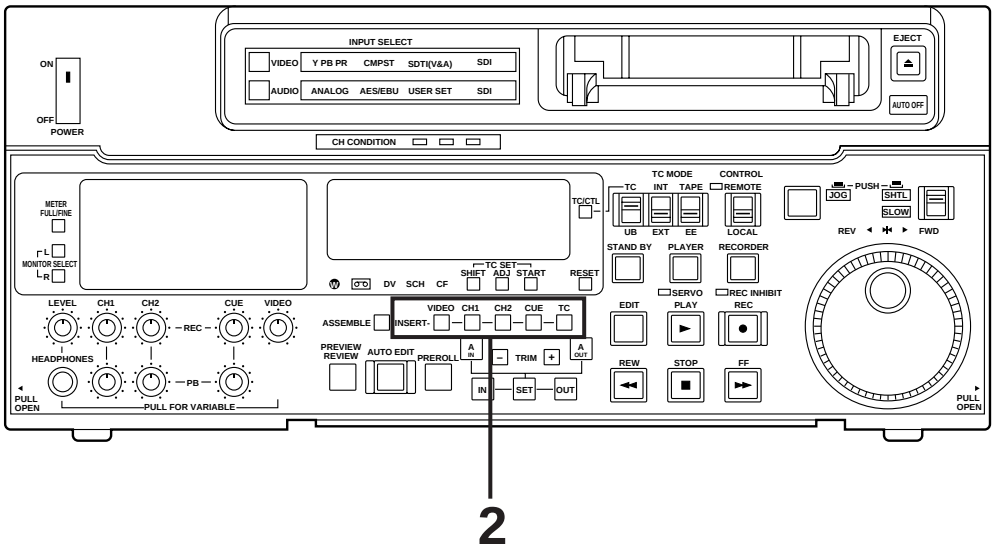

Audio split editing

The video edit points and audio edit points can be entered separately, and they can be offset from each other and edited.
Audio edit points can be entered, deleted and revised only when the insert editing mode has been selected. After the edit points have been entered, follow the same operating procedure as that for insert editing.

■ Entering the edit points

Video IN point: Press the SET button while holding down the IN button.
Video OUT point: Press the SET button while holding down the OUT button.
Audio IN point: Press the SET button while holding down the A IN button.
Audio OUT point: Press the SET button while holding down the A OUT button.

■ Deleting the edit points

Video IN point: Press the RESET button while holding down the IN button.
Video OUT point: Press the RESET button while holding down the OUT button.
Audio IN point: Press the RESET button while holding down the A IN button.
Audio OUT point: Press the RESET button while holding down the A OUT button.

■ Modifying the edit points

Video IN point: Press the TRIM+ or TRIM– button while holding down the IN button.
Video OUT point: Press the TRIM+ or TRIM– button while holding down the OUT button.
Audio IN point: Press the TRIM+ or TRIM– button while holding down the A IN button.
Audio OUT point: Press the TRIM+ or TRIM– button while holding down the A OUT button.

■ Indicating audio split editing

When the audio edit points are entered, " ∗ " appears superimposed on the front panel and TV monitor to denote audio split editing.

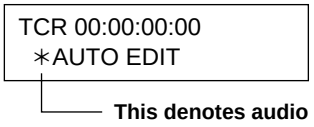

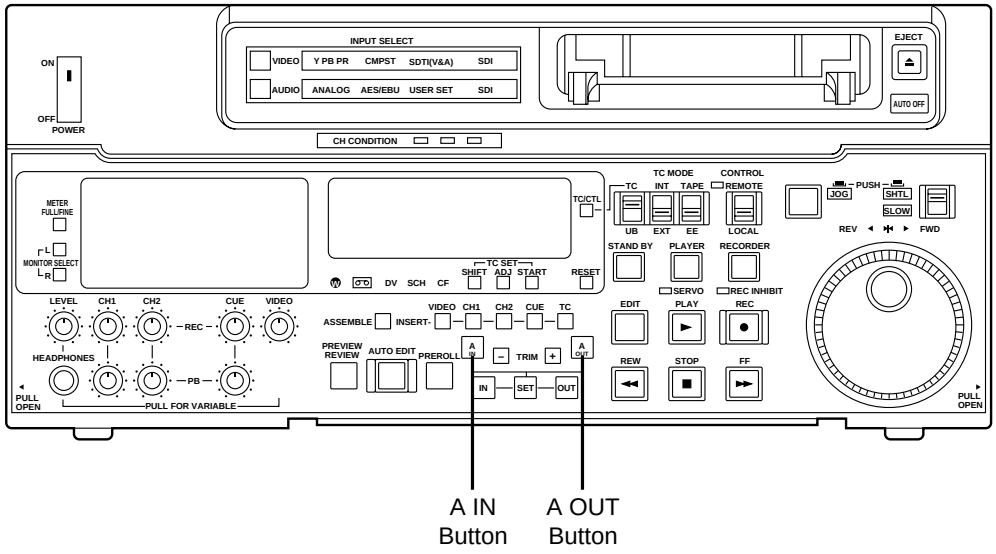

■ Displaying the audio split edit points

The edit points are displayed on the front panel as shown below. (The figure shows an audio IN point.)

Operations

Video IN point: Press the IN button.
Video OUT point: Press the OUT button.
Audio IN point: Press the A IN button.
Audio OUT point: Press the A OUT button.

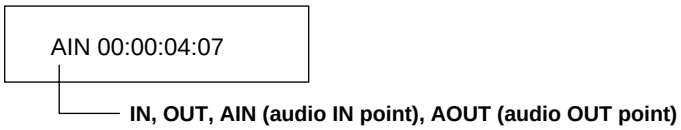

<Note>

If the editing mode is switched to assemble editing after audio edit points have been entered, these points will be deleted.

■ Cueing up the tape to the edit points

Cue-up to video IN point: Press the PREROLL button while holding down the IN button.
Cue-up to video OUT point: Press the PREROLL button while holding down the OUT button.
Cue-up to audio IN point: Press the PREROLL button while holding down the A IN button.
Cue-up to audio OUT point: Press the PREROLL button while holding down the A OUT button.

■ Duration display

The duration can be displayed on the front panel only.

Duration from video IN point to OUT point: Press the IN and OUT buttons simultaneously.
Duration from audio IN point to OUT point: Press the A IN and A OUT buttons simultaneously.

Match frame processing mechanism

When two VTRs are used for audio split editing operations, there will be a total of eight edit points: two pairs of video IN and OUT points, one for the player and the other for the recorder, and two pairs of audio IN and OUT points, one for the player and the other for the recorder. Since the remaining three points are automatically calculated when five of these eight edit points are entered, up to five edit points can be entered.

<Note>

If, during audio split editing, only the video OUT point (or audio OUT point) is entered and automatic editing is executed without the audio IN point (or video IN point) having been entered, editing will continue until the audio OUT point (or video OUT point) is entered or the STOP button is pressed to suspend operation.

Operating procedure 1

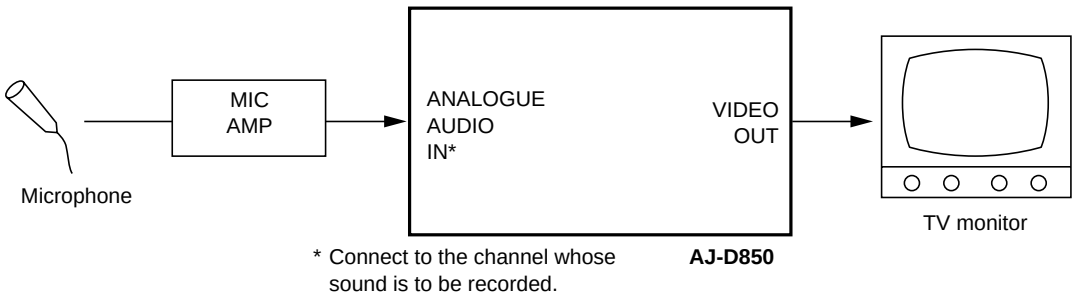

1. Select INT_VO as the setup menu No. 322 (AUD MEM MODE) setting.
2. Select the same setting for the channel (CH1 or CH2) on which the sound is to be recorded and for the setup menu No. 323 (AUD MEM CH) channel.
3. Insert the cassette tape for which the voice-over editing is to be performed.
4. Press the insert button for the channel (CH1 or CH2) on which the sound is to be recorded and ensure that its lamp lights.
5. Press the PLAY button.
6. Search the position (IN point) where voice-over editing is to start while watching the TV monitor.
7. Press the IN and SET buttons simultaneously at the IN point.
8. Input the audio signals to be recorded to the channel which was selected in step 2.
9. Search the position (OUT point) where voice-over editing is to end while watching the TV monitor.
10. Press the A OUT and SET buttons simultaneously at the OUT point. The audio signals to be recorded are stored in the memory.
11. Press the STOP button.
12. Press the AUTO EDIT button to proceed with editing. The audio signals stored in the memory are recorded from the memory onto the cassette tape.

<Note>
The audio signals can be previewed prior to editing by pressing the PREVIEW button while the SET button is held down before the AUTO EDIT button is pressed.

Operating procedure 2

1 Select INT_VO as the setup menu No. 322 (AUD MEM MODE) setting.

2 Select the same setting for the channel (CH1 or CH2) on which the sound is to be recorded and for the setup menu No. 323 (AUD MEM CH) channel.

3 Insert the cassette tape for which the voice-over editing is to be performed.

4 Press the insert button for the channel (CH1 or CH2) on which the sound is to be recorded and ensure that its lamp lights.

5 Enter the IN and OUT points of the positions where voice-over editing is to be performed.

6 Press the PREVIEW button.

7 While watching the TV monitor, input the audio signals to be recorded between the IN point and OUT point into the channel which was selected in step 2. The audio signals to be recorded are stored in the memory.

8 Press the AUTO EDIT button to proceed with editing. The audio signals stored in the memory are recorded from the memory onto the cassette tape.

<Note>

The audio signals can be previewed prior to editing by pressing the PREVIEW button while the SET button is held down before the AUTO EDIT button is pressed.

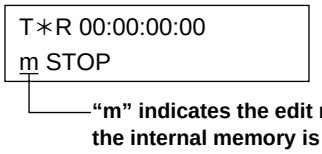

<Notes>

Memory capacity

- Up to 20 seconds of sound can be stored in the unit's internal memory. It should be borne in mind that even if an attempt is made to store more than 20 seconds of sound in the memory, all the audio signals in excess of the memory's 20-second capacity will fail to be stored.
- When INT_VO or INT_X, which is performed using the internal memory in the setup menu No. 322 (AUD MEM MODE) setting, "m" appears on the front panel and is superimposed onto the TV monitor display to indicate that the editing mode using the internal memory is now being used.

ENGLISH

For operation with an editing controller (AG-A850)

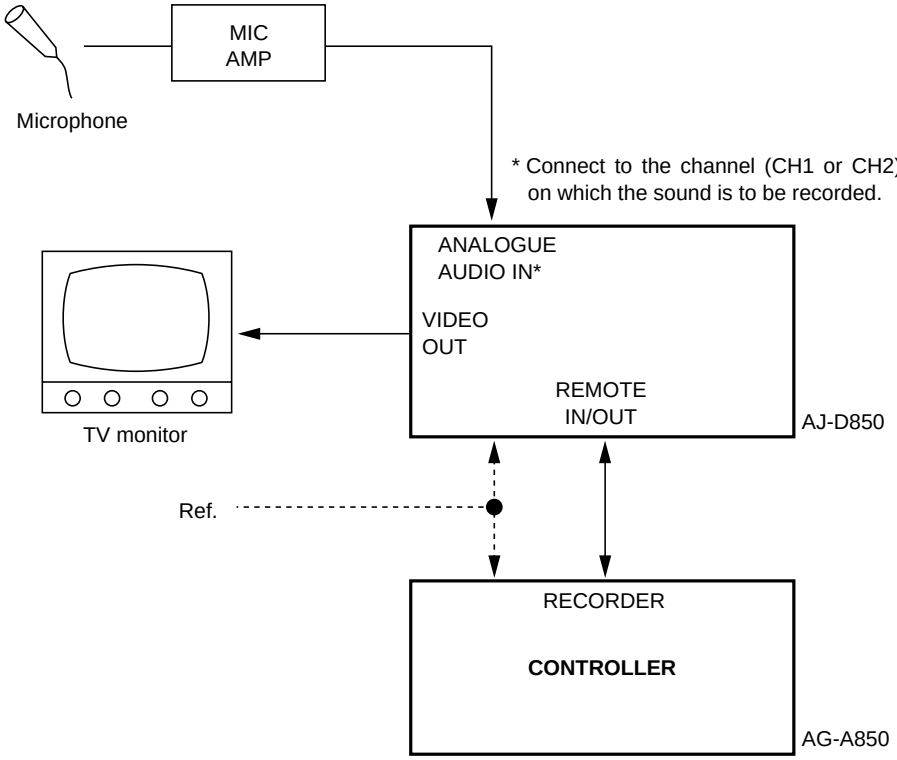

1 Select INT_VO as the setup menu No. 322 (AUD MEM MODE) setting.

2 Select the same setting for the channel (CH1 or CH2) on which the sound is to be recorded and for the setup menu No. 323 (AUD MEM CH) channel.

3 Insert the cassette tape for which the voice-over editing is to be performed into the VTR.

4 Set the CONTROL switch on the VTR to the REMOTE position.

5 Set the controller's SOURCE selector to AUX1.

6 Press the insert button for the channel (CH1 or CH2) on which the sound is to be recorded.

7 Enter the IN and OUT points of the positions where voice-over editing is to be performed.

8 Press the PREVIEW button.

9 While watching the TV monitor, input the audio signals to be recorded between the IN point and OUT point into the channel that was selected in step 6. The audio signals to be recorded are stored in memory.

10 Press the AUTO EDIT button to proceed with editing. The audio signals stored in the memory are recorded from the memory onto the cassette tape.

<Note>
For further details on the AG-A850, refer to the operating instructions of the AG-A850.

Example: To record cross-faded audio signals onto CH2

■ **Connections**

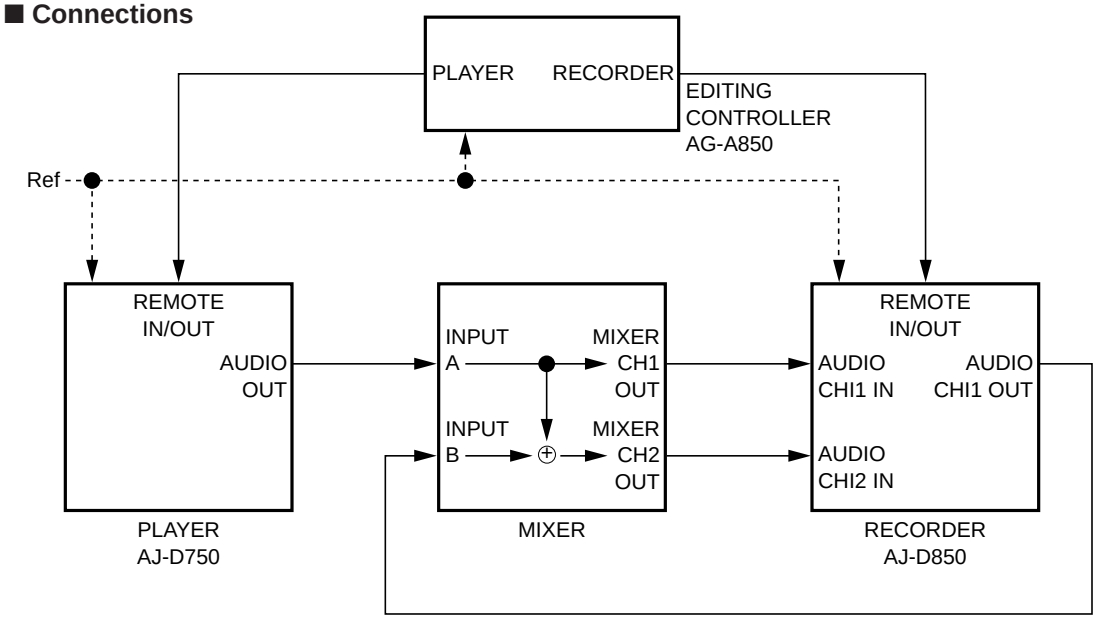

Fig. 1

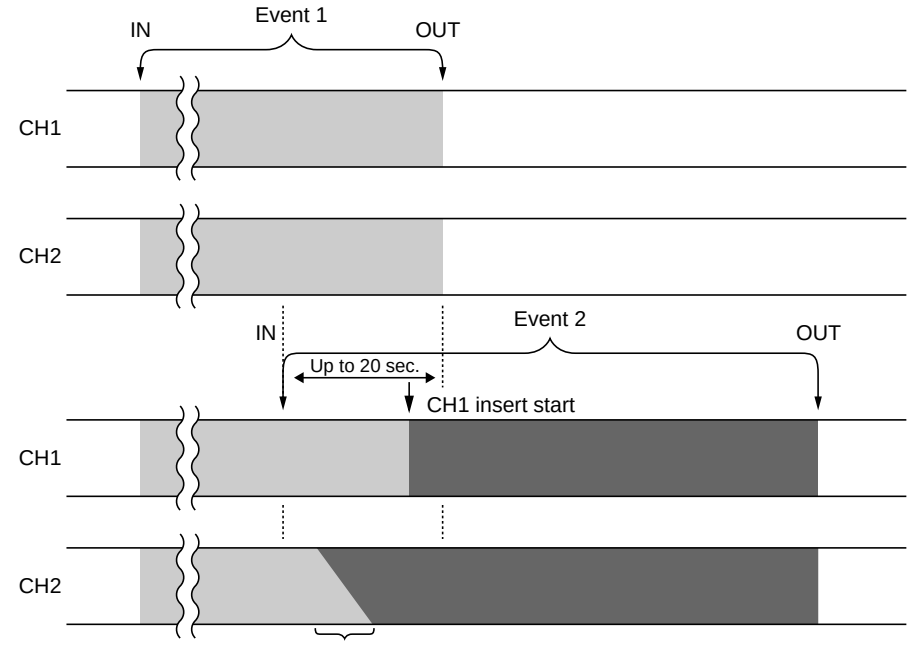

Fig. 2

1 Select INT_X as the setup menu No. 322 (AUD MEM MODE) setting.

2 Select CH2 as the setup menu No. 323 (AUD MEM CH) setting.

3 Select the audio CH1 and CH2 in the insert editing.
<Note>
Select the video as well if the video signals are also going to be edited.

4 Enter the edit points of the first event on the player's tape.

5 Enter the edit points of the first event on the recorder's tape.

6 Operate the mixer in such a way that the player's audio output signals are output from the mixer's CH1 OUT and CH2 OUT connectors. (The same audio signals will be delivered through CH1 and CH2 of the mixer.)

7 Press the AUTO EDIT button. The first event is now recorded on the recorder's tape. (See Fig. 1.)
The last 20 seconds (which is the capacity of the memory) of the audio signals before the OUT point are now saved in the memory.

8 Release the insert button for CH1 so that only the insert button for CH2 is engaged.
<Note>
Select the video as well if the video signals are also going to be edited.

9 Enter the edit point of the next event on the player's tape.

10 Enter the edit point of the next event on the recorder's tape.
<Note>
The IN point must be set up to 20 seconds (more than the cross fading duration) before the previous edit OUT point.

11 Operate the mixer in such a way that the player's audio output signals are output from the mixer's CH1 OUT connectors and that the recorder's (this unit) CH1 OUT audio signals are output from the mixer's CH2 OUT connectors. [The recorder's (this unit) CH1 OUT signals are the audio signals supplied from the internal memory.]

12 Press the AUTO EDIT button.

13 Operate the mixer starting at the IN point, and change the mixer's CH2 OUT signals gradually from the recorder's CH1 OUT audio signals into the player's audio output signals for the mixer's CH2 OUT connectors. (Cross fading)

14 Press the CH1 insert button after the mixer's CH2 output signals have been changed into the player's audio output signals. The STOP mode is established at the OUT point, and the last 20 seconds (which is the capacity of the memory) of the audio signals before the OUT point are now saved in the memory. (See Fig. 2.)

15 To continue editing, repeat steps 8 to 14.

<Notes>
Before attempting to perform voice-over editing or audio cross channel editing using the audio memory unit (AJ-YA752, option), proceed with the following settings for the unit (AJ-D850).
1. Select either AMU_X or AMU_VO as the setup menu No. 322 (AUD MEM MODE) setting.
2. For audio cross channel editing, set the channel on which the signals are to be recorded on setup menu No. 323 (AUD MEM CH).
3. Proceed with operation, using the AJ-YA752 operating instructions as a reference.

■ Additional line recording/playback function

- Select the mode for recording signals in additional lines using setup menu item No. 800 (ADD LINE).
  - **Off:** No signals are recorded in additional lines.
  - **YC422:** The input signals are recorded in 1 line in the 422 mode.
  - **YC411:** The input signals are recorded in 1 line in the 411 mode.
  - **Y1_B/W:** The input signals are recorded in 1 line in their original form as the luminance signal.
  - **Y1_PBF:** The input signals are separated into the Y (luminance) and C (chrominance) signals, and only the Y signal is recorded in 1 line.
  - **C1:** The input signals are separated into the Y (luminance) and C (chrominance) signals, and only the C signal is recorded in 1 line.
  - **Y2_B/W:** The input signals are recorded in 2 lines in their original form as the luminance signal.
  - **Y2_PBF:** The input signals are separated into the Y (luminance) and C (chrominance) signals, and only the Y signal is recorded in 2 lines.
  - **C2:** The input signals are separated into the Y (luminance) and C (chrominance) signals, and only the C signal is recorded in 2 lines.
- Select the additional lines for recording on the sub-menu screen.
- The number of lines in which the teletext signals can be recorded differs depending on which mode for recording the signals in the additional lines has been selected.

■ Teletext signal recording/playback function

- Up to 28 lines per frame of the teletext signals which are input can be recorded and played back.
- The number of lines in which the signals can be recorded differs depending on the setup menu item No. 800 (ADD LINE) setting.
- Depending on the setup menu item No. 800 (ADD LINE) setting, it may not be possible to record the input teletext signals in all of the lines.
- Listed below are the numbers of lines per frame in which the signals can be recorded in each mode.

Mode	Additional lines	Teletext signals
Off	0 line/frame	28 lines/frame
YC422	1 line/frame	15 lines/frame
YC411	1 line/frame	20 lines/frame
Y1_B/W	1 line/frame	28 lines/frame
Y1_PBF	1 line/frame	28 lines/frame
C1	1 line/frame	28 lines/frame
Y2_B/W	2 lines/frame	15 lines/frame
Y2_PBF	2 lines/frame	15 lines/frame
C2	2 lines/frame	15 lines/frame

Video output (encoder output) signal adjustments

After this system has been connected, the video output signal (ENCODER OUT) must be adjusted if AB roll editing (editing using two source machines) using an editor, for instance, is to be error-free and accurate. (This adjustment must be repeated when one of the connecting cables has been replaced and whenever the connections are changed.)

The adjustment procedure using this unit is outlined below.

1 Check the connections. (See page 23.)

2 Set the REMOTE/LOCAL switch ㉒ on the front panel bottom section to the adjustment position (LOCAL).

REMOTE: For adjusting the video output signals using an external encoder remote controller.

LOCAL: For adjusting the video output signals using this unit.

3 Adjust the source machine independently.

3-1 When using the preset values

Set the PRESET/MANUAL switches of the VIDEO LEVEL, CHROMA LEVEL, BLACK LEVEL and CHROMA PHASE controls to PRESET.

3-2 When adjusting the video output signals without using the preset values

1 Play back a cassette tape on which standard colour bar signals have been recorded.

2 Adjust the controls in such a way that the waveforms on the waveform monitor (WFM) and vectorscope (VSC) resemble those shown in the figures below.

A Black level

Adjust the control to eliminate deviation.

B Video level

Adjust this level to 700 mV.

C Chroma level and chroma phase

Adjust the two controls in such a way that the light spot of the vector waveforms comes inside the rectangular grid mark.

■ Waveform on WFM

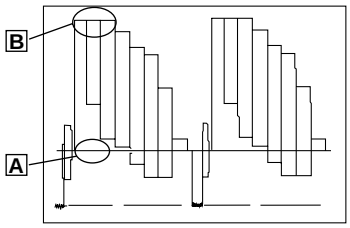

■ Waveform on VSC

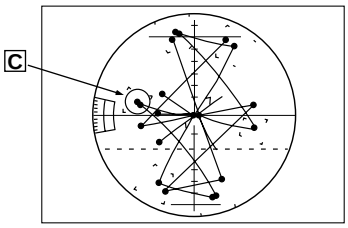

4 Perform the same adjustments on the source machine connected to the unit.

Setup (default settings)

The unit's major settings are performed by making selections on menus.
The setting menus appear on the TV monitor when the TV monitor and VIDEO OUT 3 connector in the unit's connector area are hooked up.

ENGLISH

Changing the settings

1 Press the MENU button.
The setup menu appears on the TV monitor and setup menu No. appears on the counter display. (If the setup has already been performed, the screen showing the changes made last will appear.)

2 Rotate the search dial and select the item to be set.
The cursor (∗) on the menu screen moves and the item No. on the display flashes.
- When the dial is rotated clockwise, the item No. is incremented from 001→002→003→004 and so on; when it is rotated counterclockwise, the item No. is decremented.
- The search dial should be used in jog mode if at all possible.
- Hold down the PLAY button and press the FF (next major item) or REW (previous major item) buttons to select the menu by major item.

3 While holding down the search button, rotate the search dial at the position where the change is to be made.
The setting No. now flashes.
When the dial is rotated clockwise, the setting value is incremented; when it is rotated counterclockwise, it is decremented.

4 Release the search button when the setting is completed.
The setting value on the menu screen and display flashes.
- During the SHTL mode, the item moves if the search dial is not at the STILL position.

5 Repeat steps 2 through 4 to change another item.

6 Press the SET button.
The changes are now stored in the memory.
- To return the items to the settings established before the changes were made, press the MENU button.

To return the setup settings to the factory (default) settings, press the RESET button while the menu is displayed. **The following message will now appear:**

SETUP-MENU INIT SET
YES<PLAY>/NO<STOP>

When the PLAY button is pressed, the factory settings are restored.

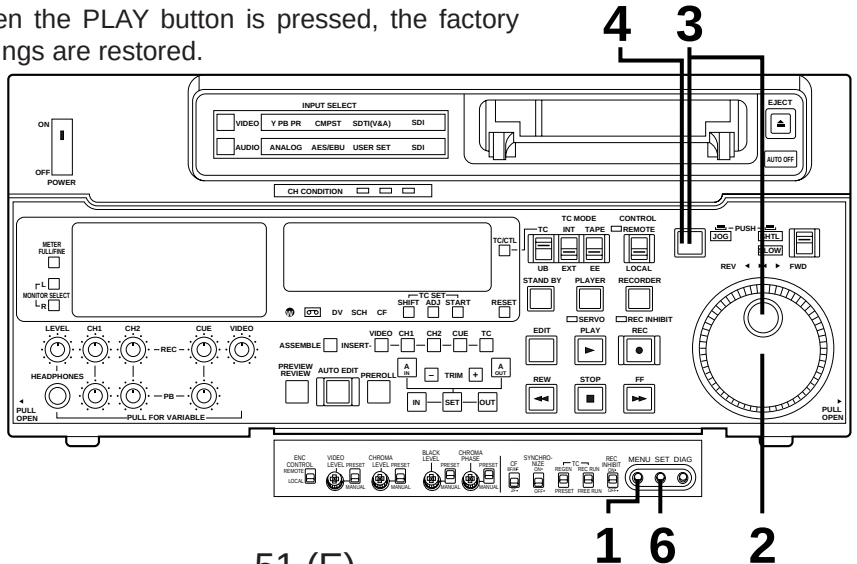

<Note>
- When the RESET button is pressed to return to the factory settings, the factory settings are restored only for the user file currently being used and other user files are not affected.
- The changed SYSTEM menu contents are recorded even if the MENU button is pressed.

This unit can store up to 5 user files (user 1 to user 5) containing different menu settings, and these files can be selected and used.

Changing the file

1 Press the MENU button.

2 Hold down the STAND BY button and press the FF button to switch to the next user file. Hold down the STAND BY button and press the REW button to switch to the previous user file.

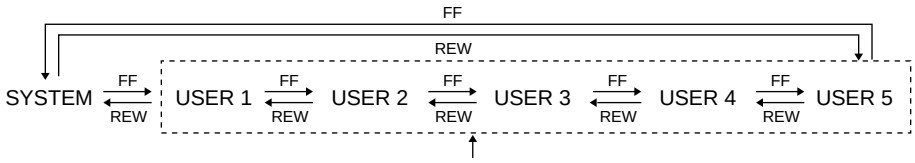

USER FILE
Each user file contains the following items.
- BASIC
- OPERATION
- INTERFACE
- EDIT
- TAPE PROTECT
- TIME CODE
- VIDEO
- AUDIO
- V BLANK
- MENU

3 Repeat the operation in step 2 to select the user file to be used and press the SET button. The user file is changed and stored in the memory.

<Note>
SYSTEM menu items are not included in user files 1 to 5.
Therefore, after selecting the user file, switch to the SYSTEM file and set the SYSTEM menu items.

Lock mode can be set to protect the settings in the system files and user files (USER2 – USER5). Settings can no longer be changed when this mode is set.
To set and release the lock mode for the system files and user files use setup item No. 30 (MENU LOCK) and setup menu item No. A03 (MENU LOCK), respectively.

Setting and releasing the lock mode.

1 Press the MENU button.

2 While holding down the STAND BY button, press the REW or FF button, and select the file for which the lock mode is to be set or released.

3 Turn the search dial and move the cursor (∗) on the menu screen to setup item No. 30 (MENU LOCK) or setup menu item No. A03 (MENU LOCK) for the system or user file.

4 While holding down the search button, turn the search dial and select lock mode setting or release.
To set the lock: Select the 0001 (ON) setting.
To release the lock: Select the 0000 (OFF) setting.

When the lock has been set, “LOCKED” flashes on the menu screen. In addition, the counter display stops flashing and lights.

```
SETUP-MENU  LOCKED
<USER2>    No.000 – 0005
∗000 P–ROLL TIME      5s
 001 CHARA H–POS       5
 002 CHARA V–POS      23
 003 DISPLAY SEL   T&STA
 004 LOCAL ENA     ST&EJ
 005 TAPE TIMER     ±12h
 006 SUPER            ON
 007 CHARA TYPE    WHITE
 008 REMAIN SEL       OFF
```

5 Press the SET button. The setting is now stored in the memory.

<Notes>
- The lock mode cannot be set for the USER1 file settings.
- Even if the RESET button is pressed, the files which has been set to the lock mode cannot be reset to the factory settings.

The contents of the USER2 – USER5 files can be copied (loaded) into the USER1 file. In addition, the contents of the USER1 file can be copied (saved) to the USER2 – USER5 files.

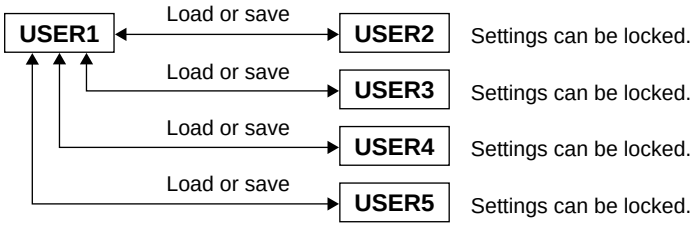

Loading a user file

1 Press the MENU button.

2 While holding down the STANDBY button, press the REW or FF button, and select USER1.

3 Turn the search dial and move the cursor (∗) on the menu screen to setup item No. A00 (LOAD).

```
SETUP-MENU  MENU
<USER1>    NO.A00 - 0000
 803 TELETEXT DET   AUTO
∗A00 LOAD          USER2
 A01 SAVE          USER2
 A02 P.ON LOAD       OFF
 END
```

4 While holding down the search button, turn the search dial and select the user file whose contents are to be loaded into USER1.

5 Press the SET button. The following messages appear on the menu screen and counter display.

Menu screen

```
SETUP-MENU LOAD

  USER2 → USER1 OK?
   YES<PLAY>/NO<STOP>
```

Counter display

```
TCR  00:00:00:00
SETUP LOAD U-2 → U-1
```

The user file number selected in step 4 is displayed in the shaded area.

6 Press the PLAY button. The settings of the user file selected in step 4 are loaded, and the USER1 menu display appears. When the STOP button is pressed, the USER1 menu display appears while the settings remain unchanged.

7 Turn the search dial and move the cursor (∗) on the menu screen to any setup item except No. A00 (LOAD) and No. A01 (SAVE).

8 Press the SET button. The USER1 settings are now stored in the memory.
If the USER1 settings are not going to be stored in the memory, do not press the SET button but press the MENU button.

Saving a user file

1 Press the MENU button.

2 While holding down the STAND BY button, press the REW or FF button, and select USER1.

3 Turn the search dial and move the cursor (∗) on the menu screen to setup item No. A01 (SAVE).

```
SETUP-MENU  MENU
<USER1>    NO.A00 - 0000
 803 TELETEXT DET   AUTO
 A00 LOAD          USER2
∗A01 SAVE          USER2
 A02 P.ON LOAD       OFF
 END
```

4 While holding down the search button, turn the search dial and select the user file into which the USER1 contents are to be saved. User files which have been set to the lock mode are not displayed. When all the user files have been set to the lock mode, the “LOCKED” display appears and the contents cannot be saved.

5 Press the SET button. The following messages appear on the menu screen and counter display.

Menu screen

```
SETUP-MENU SAVE

  USER1 →  USER2 OK?
   YES<PLAY>/NO<STOP>
```

Counter display

```
TCR  00:00:00:00
SETUP SAVE U-1 → U-2
```

The user file number selected in step 4 is displayed in the shaded area.

6 Press the PLAY button. The contents of the USER1 file are saved in the user file which was selected in step 4 and stored in the memory. When the STOP button is pressed, the USER1 menu display appears while the settings remain unchanged.

7 Turn the search dial and move the cursor (∗) on the menu screen to any setup item except No. A00 (LOAD) and No. A01 (SAVE).

8 Press the SET button. The USER1 settings are now stored in the memory.
If the USER1 settings are not going to be stored in the memory, do not press the SET button but press the MENU button.

Automatic loading of user file when the power is turned on

When the user file to be loaded is selected in advance using setup menu item No. A02 (P.ON LOAD), it can be automatically loaded into USER1 when the power is turned on.

ENGLISH

SYSTEM menu

<SYSTEM>

Item		Setting		Description
No.	Superimposed display	No.	Superimposed display	
00	SYS SC	0000 ⋮ 0127 ⋮ 0255	–127 ⋮ 0 ⋮ 128	System phase adjustment: Total variable range: ±180° or more –: Advanced +: Delayed **<Note>** If setting operation is performed, the setting value does not return to factory (default) setting.
01	SYS H	0000 ⋮ 0032 ⋮ 0060	–30 ⋮ 0 ⋮ 30	System phase adjustment: SC cycle phase (226 ns steps) –: Advanced +: Delayed **<Note>** If setting operation is performed, the setting value does not return to factory (default) setting.
02	VIDEO PHASE	0000 ⋮ 0032 ⋮ 0064	–32 ⋮ 0 ⋮ 32	Video phase adjustment: 148 ns steps –: C advanced +: C delayed
03	YC COARSE	0000 ⋮ 0002 ⋮ 0004	–2 ⋮ 0 ⋮ 2	YC timing rough adjustment: 148 ns steps –: C advanced +: C delayed
04	YC FINE	0000 ⋮ 0002 ⋮ 0004	–2 ⋮ 0 ⋮ 2	YC timing fine adjustment: 37 ns steps –: C advanced +: C delayed (The digital OUT option YC does not change.)
05	SCH COARSE	0000 0001 0002 0003	0 90 180 270	SCH phase adjustment: 90° units (The S and C phases change but the H phase does not change.)
06	SCH FINE	0000 ⋮ 0128 ⋮ 0255	–124 ⋮ 0 ⋮ 123	SCH phase adjustment: Total variable range: ±45° or more (The S and C phases change but the H phase does not change.)
07	P_B OUT LV	0000 ⋮ 0124 ⋮ 0247	–124 ⋮ 0 ⋮ 123	Component P_B output level adjustment: Total variable range: ±3 dB
08	P_R OUT LV	0000 ⋮ 0124 ⋮ 0247	–124 ⋮ 0 ⋮ 123	Component P_R output level adjustment: Total variable range: ±3 dB

The underline on the setting item denotes the initial setting.

SYSTEM menu

<SYSTEM> (continued)

Item		Setting		Description
No.	Superimposed display	No.	Superimposed display	
10	AV PHASE	0000 ⋮ 0128 ⋮ 0255	–128 ⋮ 0 ⋮ 127	This adjusts the audio output phase with respect to the video output: 20.8 µs steps –: The audio output phase is advanced with respect to the video output. +: The audio output phase is delayed with respect to the video output.
20	SYS H RANGE	0000 0001	FULL FINE	This selects the adjustable range for SYSTEM H during when the ENCODER REMOTE is connected. 0: ±6.7 µ sec (±30 steps) 1: –1.5 to +2.2 µ sec (–7 to +10 steps) **<Note>** If setting operation is performed, the setting value does not return to factory (default) setting.
21	SYS H OFFSET	0000 0001 0002 0003 0004 0005 0006 0007 0008	–4 –3 –2 –1 0 1 2 3 4	System phase adjustment: 3.62 µs steps 0: –14.5 µ sec 1: –10.8 µ sec 2: –7.23 µ sec 3: –3.62 µ sec 4: 0 sec 5: +3.62 µ sec 6: +7.23 µ sec 7: +10.8 µ sec 8: +14.5 µ sec **<Note>** Factory settings will remain unchanged even if an attempt is made to perform a setting operation.
30	MENU LOCK	0000 0001	OFF ON	This selects whether the system file lock mode is to be engaged or released. 0: The lock is released (file data can be changed). 1: The lock is engaged (file data cannot be changed).

The underline on the setting item denotes the initial setting.

ENGLISH

USER menu

<BASIC>

Item		Setting		Description
No.	Superimposed display	No.	Superimposed display	
000	P-ROLL TIME	0000 ⋮ 0005 ⋮ 0015	0S ⋮ 5S ⋮ 15S	This sets the preroll time which can be set from 0 to 15 seconds in 1-second increments. **<Note>** When the unit is set to automatic editing [PREVIEW, AUTO EDIT], the unit will not operate if the preroll time is set to 0 seconds.
001	CHARA H-POS	0000 ⋮ 0005 ⋮ 0011	0 ⋮ 5 ⋮ 11	This sets the position of the characters on the horizontal plane for the time code and other super displays output to the VIDEO OUT 3 connector. **<Notes>** 1. When setting this item, the DISPLAY SEL status is output to VIDEO OUT 3 even if SUPER OFF has been set. However, when the menu is exited, operation complies with the SUPER OFF/ON setting. Also, CHARA TYPE is output to VIDEO OUT 3 according to the status set in the menu. 2. When the DISPLAY SEL setting causes characters to extend beyond the edges of the screen, the setting value is changed so that the characters are automatically displayed in a position on the screen.
002	CHARA V-POS	0000 ⋮ 0023 ⋮ 0028	0 ⋮ 23 ⋮ 28	This sets the position of the characters on the vertical plane for the time code and other super displays output to the VIDEO OUT 3 connector. **<Notes>** 1. When setting this item, the DISPLAY SEL status is output to VIDEO OUT 3 even if SUPER OFF has been set. However, when the menu is exited, operation complies with the SUPER OFF/ON setting. Also, CHARA TYPE is output to VIDEO OUT 3 according to the status set in the menu. 2. When the DISPLAY SEL setting causes characters to extend beyond the edges of the screen, the setting value is changed so that the characters are automatically displayed in a position on the screen.
003	DISPLAY SEL	0000 0001 0002 0003 0004 0005 0006	TIME T&STA T&S&M T&RT T&YMD T&MDY T&DMY	This is used to select what is to appear as the time code or other superimposed display at the VIDEO OUT 3 connector. 0: Time only 1: Time and operating status 2: Time, operating status and mode 3: Time and recording time 4: Time and recording date (year/month/day) 5: Time and recording date (month/day/year) 6: Time and recording date (day/month/year) **<Notes>** • "DVCPRO MODE," "DV MODE" or "DVCAM MODE" is displayed as the mode when a DVCPRO, DV or DVCAM format tape is used, respectively. • When setting 2 (T&S&M) is used, an error message will appear when a warning or error has occurred. • The recording time and recording date are displayed only when a DV or DVCAM format tape is played back. The operating status is displayed when a DVCPRO format tape is played back.

The underline on the setting item denotes the initial setting.

USER menu

<BASIC> (continued)

Item		Setting		Description
No.	Superimposed display	No.	Superimposed display	
004	LOCAL ENA	0000 0001 0002	DIS ST&EJ ENA	This selects the buttons which can be operated on the front panel when the REMOTE/LOCAL switch has been set to REMOTE. 0: No buttons can be operated. 1: Only the STOP and EJECT buttons can be operated. 2: All buttons except for the RECORDER and PLAYER buttons can be operated.
005	TAPE TIMER	0000 0001	±12h 24h	This selects the 12 or 24 hour display for the CTL counter. 0: 12 hour display 1: 24 hour display
006	SUPER	0000 0001	OFF ON	This selects whether the time code and other super display which are output to the VIDEO OUT 3 connector is to shown. 0: Not shown. 1: Shown.
007	CHARA TYPE	0000 0001	WHITE W/OUT	This selects the display type for the super display output to the VIDEO OUT 3 connector as well as for displays such as the setting menu, etc. 0: White characters against a black background. 1: White characters with a black border.
008	REMAIN SEL	0000 0001	OFF ON	This selects whether the remaining tape time is shown on the front panel. 0: Not shown. 1: Shown. When “T&S&M” is selected as the setup menu item No. 003 (DISPLAY SEL) setting, the remaining tape time is displayed on the third line of the VIDEO OUT 3 connector superimposed display in place of the mode display. **<Note>** Even when “1” (ON) is selected, the remaining tape time is not shown while the unit is calculating the remaining tape time after ejecting or inserting the cassette.
009	SETUP NUMBER	0000 0001	OFF ON	This selects whether the SETUP-MENU No. is displayed on the front panel. 0: The SETUP-MENU No. is not displayed. 1: The SETUP-MENU No. is displayed.
010	MONI CONTROL	0000 0001	MANU AUTO	This sets whether the recorder is to be forcibly set to the EE mode and the player’s playback signals are to be output to the monitor by pressing the recorder’s PLAYER button when a monitor has been connected only to the recorder during deck-to-deck editing. 0: The recorder is not forcibly set to the EE mode. 1: The recorder is forcibly set to the EE mode, and the player’s playback signals are output.

The underline on the setting item denotes the initial setting.

ENGLISH

USER menu

<OPERATION>

Item		Setting		Description
No.	Superimposed display	No.	Superimposed display	
100	SEARCH ENA	0000 0001	DIAL KEY	This selects the direct search dial operation. 0: For direct search dial operations. 1: Operation is not transferred to the search mode unless the search button is pressed.
101	SHTL MAX	0000 0001 0002	×16 ×32 ×60	This sets the maximum speed for shuttle operations. 0: 16× normal speed 1: 32× normal speed 2: 60× normal speed **<Note>** During DV or DVCAM format, the maximum speed is 32× normal speed even when 60× is selected.
102	FF. REW MAX	0000 0001 0002	×32 ×60 ×100	This sets the maximum speed for FF and REW operations. 0: 32× normal speed 1: 60× normal speed 2: 100× normal speed **<Note>** During DV or DVCAM format, the maximum speed is 32× normal speed regardless of this setting.
103	AUDIO MUTE	0000 0001	OFF ON	This sets the status until the audio signal is output when operation switches from the stop or search modes to the play mode. 0: The time until the audio is output is shortened. 1: The audio is output after the status stabilizes. **<Note>** When set to 0 (OFF), the sound in the initially output part is incomplete. Therefore, this setting is not recommended for broadcasts.
104	REF ALARM	0000 0001	OFF ON	This selects whether to warn the operator when the REF.VIDEO signal has not been connected. 0: Warning is not given. 1: Warning is given by the flashing STOP lamp.
105	AUTO EE SEL	0000 0001 0002	S/F/R STOP BLACK	This selects the VTR mode in which the EE status is established when the TAPE/EE switch is set to EE. 0: EE status is established in the STOP, FF or REW mode. However, EE status is always established in EJECT mode regardless of the TAPE/EE switch setting. 1: EE status is established only in the stop mode. However, EE status is always established in EJECT mode regardless of the TAPE/EE switch setting. 2: EE status is established only in the stop mode. However, depending on TAPE/EE switch setting EJECT mode is as follows: TAPE/EE switch EE: EE status TAPE/EE switch TAPE: BLACK status for video MUTE status for audio
106	PLAY DELAY	0000 ⋮ 0015	0 ⋮ 15	This set the play delay time in frame increments.
107	CAP.LOCK	0000 0001	4F 8F	This selects the capstan lock mode when the CF switch at the bottom of the front panel is at 8F/4F. 0: 4F mode 1: 8F mode

The underline on the setting item denotes the initial setting.

USER menu

<OPERATION> (continued)

Item		Setting		Description
No.	Superimposed display	No.	Superimposed display	
108	FORMAT SEL	0000 0001 0002	DVCPRO DV DVCAM	These settings are for selecting the format when an L cassette or S cassette is used. 0: L cassette → DVCPRO mode S cassette → DV mode 1: L cassette/S cassette → DV mode 2: L cassette/S cassette → DVCAM mode **<Notes>** Bear in mind that, in addition to problems with playback, the trouble described below may occur when a tape which does not match the selected format is inserted. 1. If a DV or DVCAM tape is inserted when the DVCPRO mode setting has been selected, the recording operation will be conducted but no guarantee is given for the resulting performance, etc. Conversely, recording is not possible if a DVCPRO cassette tape is inserted when the DV or DVCAM mode setting has been selected. 2. The REMAIN display fails to appear properly. 3. The slow-down position near the tape start or end is not located accurately. 4. When a tape which does not match the selected format is inserted, no guarantee is given for the resulting performance, etc.
112	AUTO REW	0000 0001	OFF ON	This selects whether to rewind the tape automatically to the tape start when the tape end is detected. 0: The tape stops at the tape end. 1: The tape is rewound to the tape start.
113	MEMORY STOP	0000 0001	OFF ON	This selects whether the VTR is to stop automatically when the counter value reaches “0” during a fast forwarding or rewinding operation in the CTL mode. 0: The VTR does not stop. 1: The VTR stops automatically. **<Notes>** 1. The stop mode concerned is either the stop or the still-picture (SHTL STILL) mode depending on the setup menu No. 313 (AFTER CUE-UP) setting. 2. When both the AUTO REW function and MEMORY function have been selected at the same time, the AUTO REW function takes precedence.

The underline on the setting item denotes the initial setting.

Memory stop function

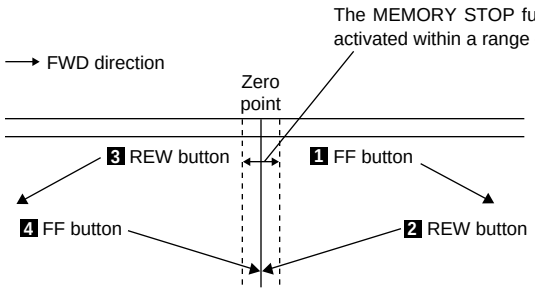

1 When the FF button is pressed, the VTR performs the regular fast forward operation since the zero point is not located in the direction of operation.

2 When the REW button is pressed, the PREROLL lamp lights (the SHTL lamp lights as well), the VTR proceeds with the preroll operation, and it automatically stops when it reaches the position where the counter reads “0.”

3 When the REW button is pressed, the VTR performs the regular rewinding operation since the zero point is not located in the direction of operation.

4 When the FF button is pressed, the PREROLL lamp lights (the SHTL lamp lights as well), the VTR proceeds with the preroll operation, and it automatically stops when it reaches the position where the counter reads “0.”

ENGLISH

USER menu

<OPERATION> (continued)

Item		Setting		Description
No.	Superimposed display	No.	Superimposed display	
115	STOP RESPNS	<u>0000</u> 0001	<u>NORMAL</u> QUICK	This selects the response when the mode is changed to STOP/STILL while the tape is travelling. 0: Priority is given to the output picture. 1: Priority is given to the response. **<Notes>** • At the 1 (QUICK) setting, the picture may not be as clear in the STOP/STILL mode as it would be at the 0 (NORMAL) setting. • CTL may shift by ±2 frames.
116	EE MODE SEL	<u>0000</u> 0001	<u>NORMAL</u> THRU	This selects the output signals in the EE mode. 0: Signals which are delayed by an amount equivalent to the time taken for the internal digital signal processing are output. 1: The signals are output without internal digital signal processing. **<Notes>** • The NORMAL setting is forcibly selected for the internal operation when the editing mode is selected, when SDTI is set as the video input signal selection or when INT SG is selected for the video or audio signals. • Use the signals which are output in the EE mode for monitoring purposes.
117	FRZ MODE SEL	<u>0000</u> 0001 0002	<u>DIS</u> STBOFF SOF&EJ	This selects the output pictures from the playback pictures in the STANDBY OFF mode and EJECT mode. 0: The video output is muted. 1: The playback picture is frozen at the moment when the STANDBY OFF mode was established, and output. 2: The playback picture is frozen at the moment when the STANDBY OFF mode and EJECT mode were established, and output. **<Notes>** • The status in the freeze mode follows the setting for setup menu No. 608 (FREEZE SEL). • In the EJECT mode, freeze pictures are output only when 2 (BLACK) is used as the setup menu No. 105 (AUTO EE SEL) setting.

The underline on the setting item denotes the initial setting.

USER menu

<INTERFACE>

Item		Setting		Description
No.	Superimposed display	No.	Superimposed display	
200	PARA RUN	0000 0001	DIS ENA	This selects whether two or more VTRs are to be operated in synchronization. 0: No operation in synchronization 1: Operation in synchronization **<Note>** When operating two or more VTRs in synchronization, set item 200 of all the VTRs to 0001.
201	9P SEL	0000 0001	OFF ON	This selects whether the 9P connector functions when the REMOTE/LOCAL switch has been set to REMOTE. 0: Do not function 1: Function
202	ID SEL	0000 0001	OTHER DVCPRO	This selects the ID information which is returned to the controller. 0: 21 25H 1: DVCPRO's, own ID is returned (F1 33H).
203	25P SEL	0000 0001	OFF ON	This selects whether the PARALLEL (25P) connector functions when the REMOTE/LOCAL switch has been set to REMOTE. 0: Does not function 1: Functions
204	RS232C SEL	0000 0001	OFF ON	These settings are for selecting whether the RS-232C connector is to function when the REMOTE/LOCAL switch is set to REMOTE. 0: Connector does not function. 1: Connector functions.
205	BAUD RATE	0000 0001 0002 0003 0004 0005	300 600 1200 2400 4800 9600	These settings are for selecting the RS-232C communication speed (baud rate).
206	DATA LENGTH	0000 0001	7 8	These settings are for selecting the RS-232C data length. (Unit: bit)
207	STOP BIT	0000 0001	1 2	These settings are for selecting the RS-232C stop bit length. (Unit: bit)
208	PARITY	0000 0001 0002	NON ODD EVEN	These settings are for selecting the none, odd or even for the RS-232C parity bit. 0: Parity bit is not used. 1: An odd number of bits is used for the parity system. 2: An even number of bits is used for the parity system.
209	RETURN ACK	0000 0001	OFF ON	These settings are for selecting whether the ACK code is to be returned when a command is received from RS-232C. 0: ACK code is not returned. 1: ACK code is returned.
210	25P STBY CMD	0000 0001	OFF/ON ON	This selects the method used to detect the STANDBY COMMAND signal input at the PARALLEL (25P) connector. 0: Each time active signals are detected, the STANDBY ON or STANDBY OFF mode is selected alternately. 1: When active signals are detected in the STANDBY OFF mode, the unit is transferred to the STANDBY ON mode. No effect is exerted on operation while the STANDBY ON mode is established.

The underline on the setting item denotes the initial setting.

ENGLISH

USER menu

<EDIT>

Item		Setting		Description
No.	Superimposed display	No.	Superimposed display	
301	IN/OUT DEL	0000 0001	MANU AUTO	This selects the operation to be performed when an edit point has been set incorrectly (when the OUT point is before the IN point). 0: Editing is not executed unless the illegal edit point is cleared or set again properly. 1: The edit points already input are automatically cleared.
302	NEGA FLASH	0000 0001	OFF ON	This selects whether to show a negative display when the IN point is greater than the OUT point. 0: No negative display. 1: Negative display.
303	STD/ NON-STD	0000 0001 0002	AUTO STD N-STD	This selects STD or NON-STD in accordance with the composite input signal. 0: Standard/non-standard signals are automatically identified and processed. 1: Standard signals are processed. (Forced STD) 2: Non-standard signals are processed. (Forced NON-STD)
304	SERVO REF	0000 0001	AUTO EXT	This selects the video signal processing. 0: Servo is synchronized with the input signal during recording and editing, or with the REF signal during playback. 1: Servo is synchronized at all times with the REF signal.
305	EDIT RPLCE1	0000 0001 0002 0003	N-DEF CH1 CH2 CH1+2	This sets the channel assignments for the controller's analogue audio preset when editing the digital audio of the VTR using a controller which does not have a digital audio edit preset control function. This selects the channel concerned when the VTR CH1 edit preset is set in compliance with the ON or OFF presetting for the analogue audio signals designated by the controller. 0: Not set. 1: Compliance with analogue CH1 edit preset. 2: Compliance with analogue CH2 edit preset. 3: Compliance with either analogue CH1 or CH2 edit preset.
306	EDIT RPLCE2	0000 0001 0002 0003	N-DEF CH1 CH2 CH1+2	This selects the channel concerned when the VTR CH2 edit preset is set in compliance with the ON or OFF presetting for the analogue audio signals designated by the controller. 0: Not set. 1: Compliance with analogue CH1 edit preset. 2: Compliance with analogue CH2 edit preset. 3: Compliance with either analogue CH1 or CH2 edit preset.
307	EDIT RPLCEC	0000 0001 0002 0003	N-DEF CH1 CH2 CH1+2	This selects the channel concerned when the VTR CUE edit preset is set in compliance with the ON or OFF presetting for the analogue audio signals designated by the editor or controller. 0: Not set. 1: Compliance with analogue CH1 edit preset. 2: Compliance with analogue CH2 edit preset. 3: Compliance with either analogue CH1 or CH2 edit preset.

The underline on the setting item denotes the initial setting.

USER menu

<EDIT> (continued)

Item		Setting		Description
No.	Superimposed display	No.	Superimposed display	
308	CONFI EDIT	0000 0001	OFF ON	This selects whether to conduct simultaneous playback while editing is in progress. 0: No simultaneous playback 1: Simultaneous playback **<Note>** Simultaneous playback is valid when the TAPE/EE switch is set to TAPE.
309	AUD EDIT IN	0000 0001	CUT FADE	This selects the connection method for the digital audio edit IN point. 0: Cut processing 1: V Fade processing
310	AUD EDIT OUT	0000 0001	CUT FADE	This selects the connection method for the digital audio edit OUT point. 0: Cut processing 1: V Fade processing
311	AUTO ENTRY	0000 0001	DIS ENA	This selects whether the IN point is to be entered using the PREROLL button when it has not been entered. 0: IN point is not entered. 1: IN point is entered.
312	CF ADJ SEL	0000 0001	PLAYER RECORD	This selects the CF adjustment deck with deck-to-deck editing. 0: The player's edit IN/OUT points are adjusted. (reference as the RECORDER side) 1: The recorder's edit IN/OUT points are adjusted. (reference as the PLAYER side)
313	AFTER CUE-UP	0000 0001	STOP STILL	This selects the mode after cue-up operation is complete. 0: STOP mode 1: SHTL STILL mode
316	VAR STEP	0000 0001	FINE COARSE	This selects the VAR speed during remote control operations. 0: The tape is played at the fine step speed. 1: The tape is played at a speed at which noise-less playback is possible in the –0.43× to +1× (–0.5× to +1×) range. **<Notes>** • The tape will be played at the speed given in parentheses in the DV/DVCAM mode. • At the 1 (COARSE) setting, the phase cannot be synchronized from the editing controller.
317	VAR FWD MAX	0000 0001 0002 0003 0004 0005 0006 0007 0008	+4.1 +1.85 +1 +0.75 +0.5 +0.3 +0.2 +0.1 +0.03	This sets the maximum VAR FWD speed. 0: +4.1× (+3.1×) speed 1: +1.85× (+1.85×) speed 2: +1× (+1×) speed 3: +0.75× (+0.5×) speed 4: +0.5× (+0.5×) speed 5: +0.3× (+0.3×) speed 6: +0.2× (+0.2×) speed 7: +0.1× (+0.1×) speed 8: +0.03× (+0.03×) speed **<Notes>** • The tape will be played at the speed given in parentheses in the DV/DVCAM mode. • In the DV/DVCAM mode, the maximum speed is set to +1× when the dial on the front panel is operated. • At any speed setting other than 0 (+4.1), the phase cannot be synchronized from the editing controller.

The underline on the setting item denotes the initial setting.

ENGLISH

USER menu

<EDIT> (continued)

Item		Setting		Description
No.	Superimposed display	No.	Superimposed display	
318	VAR REV MAX	0000 0001 0002 0003 0004 0005 0006 0007	–4.1 –1.85 –1 –0.43 –0.3 –0.2 –0.1 –0.03	This sets the maximum VAR REV speed. 0: –4.1× (–3.1×) speed 1: –1.85× (–1.85×) speed 2: –1× (–1×) speed 3: –0.43× (–0.5×) speed 4: –0.3× (–0.3×) speed 5: –0.2× (–0.2×) speed 6: –0.1× (–0.1×) speed 7: –0.03× (–0.03×) speed **<Notes>** • The tape will be played at the speed given in parentheses in the DV/DVCAM mode. • In the DV/DVCAM mode, the maximum speed is set to –0.5× when the dial on the front panel is operated.
319	JOG STEP	0000 0001	FINE COARSE	This selects the JOG speed during remote control operations. 0: The tape is played at the fine step speed. 1: The tape is played at a speed at which noise-less playback is possible in the –0.43× to +1× (–0.5× to +1×) range. **<Notes>** • The tape will be played at the speed given in parentheses in the DV/DVCAM mode. • At the 1 (COARSE) setting, the phase cannot be synchronized from an editing controller which synchronizes the phase using the JOG command.
320	JOG FWD MAX	0000 0001 0002	+4.1 +1.85 +1	This sets the maximum JOG FWD speed. 0: +4.1× (+3.1×) speed 1: +1.85× (+1.85×) speed 2: +1× (+1×) speed **<Notes>** • The tape will be played at the speed given in parentheses in the DV/DVCAM mode. • The maximum speed is set to +1× when the dial on the front panel is operated. • At any speed setting other than 0 (+4.1), the phase cannot be synchronized from an editing controller which synchronizes the phase using the JOG command.
321	JOG REV MAX	0000 0001 0002 0003	–4.1 –1.85 –1 –0.43	This sets the maximum JOG REV speed. 0: –4.1× (–3.1×) speed 1: –1.85× (–1.85×) speed 2: –1× (–1×) speed 3: –0.43× (–0.5×) speed **<Notes>** • The tape will be played at the speed given in parentheses in the DV/DVCAM mode. • When the dial on the front panel is operated, the maximum speed is set to –1× in the DVCPRO mode and to –0.5× in the DV/DVCAM mode.

The underline on the setting item denotes the initial setting.

<EDIT> (continued)

Item		Setting		Description
No.	Superimposed display	No.	Superimposed display	
322	AUD MEM MODE	0000	OFF	This selects whether the voice-over or audio cross channel editing which is to be performed using the AJ-YA752 audio memory unit or internal audio memory. 0: Neither voice-over nor audio cross channel editing is performed 1: Audio cross channel editing is performed using the AJ-YA752 audio memory unit. 2: Voice-over editing is performed using the AJ-YA752 audio memory unit. 3: Audio cross channel editing is performed using the internal audio memory. 4: Voice-over editing is performed using the internal audio memory. **<Notes>** • The RS-232C interface will not function with the 1 (AMU_X) or 2 (AMU_VO) setting. • Refer to the instruction manual of the AJ-YA752 audio memory unit for details on how to use each mode using this unit.
		0001	AMU_X	
		0002	AMU_VO	
		0003	INT_X	
		0004	INT_VO	
323	AUD MEM CH	0000	CH1	This sets the channel for the voice-over or audio cross channel editing which is performed using the AJ-YA752 audio memory unit or internal audio memory. 0: The signals are recorded onto CH1. 1: The signals are recorded onto CH2. **<Note>** This setting has no effect when AMU_VO has been selected as the setup menu No. 322 (AUD MEM MODE) setting.
		0001	CH2	
324	POSTROLL TM	0000	0s	This sets the postroll time. Any time from 0 to 5 seconds can be set in 1-second units.
		0001	1s	
		0002	2s	
		0003	3s	
		0004	4s	
		0005	5s	

The underline on the setting item denotes the initial setting.

USER menu

<TAPE PROTECT>

Item		Setting		Description
No.	Superimposed display	No.	Superimposed display	
400	STILL TIMER	0000 0001 0002 0003 0004 0005 0006 0007 0008	0.5s 5s 10s 20s 30s 40s 50s 1min 2min	This selects the time to be taken until the unit goes into the tape protection mode when it is left standing in the stop or search still (JOG/VAR/SHTL) mode. (Unit: s = second, min = minute) **<Note>** With the DV or DVCAM format, the maximum time which can be set is 10 s even when a setting above 10 s has been selected. The selection screen, however, will operate for up to 2 minutes.
401	SRC PROTECT	0000 0001	STEP HALF	This selects the operation during the tape protection mode when the unit is left standing in the still status during the search mode (JOG/VAR/SHTL). 0: STEP FWD. 1: HALF LOADING. **<Note>** When STEP FWD is selected, the unit automatically goes into the HALF LOADING mode when the total time for which the unit is left standing in the still status reaches 30 minutes (DVCPRO) or 1 minute (DV or DVCAM).
402	DRUM STDBY	0000 0001	OFF ON	This selects the drum operation in the STANDBY OFF mode. 0: The drum stops rotating. 1: The drum continues rotating.
403	STOP PROTECT	0000 0001	STEP HALF	This selects the operation in the tape protection mode when the unit has been left standing in the STOP mode. 0: STEP FWD 1: HALF LOADING **<Note>** When STEP FWD is selected, the unit is automatically transferred to the HALF LOADING mode when the total time during which it has been left standing in the STOP mode reaches 30 minutes (or 1 minute with a DV/DVCAM tape).

The underline on the setting item denotes the initial setting.

<Note>
In order to protect the tape and VTR helical heads, it is recommended that the Still Timer be set for automatic tape protection mode in 30 seconds or under.

USER menu

<TIME CODE>

Item		Setting		Description
No.	Superimposed display	No.	Superimposed display	
500	VITC POS-1	0000	7L	This sets the position where the VITC signal is to be inserted. (The same line as for VITC POS-2 in 501 cannot be selected.)
		0001	8L	
		0002	9L	
		0003	10L	
		0004	11L	
		0005	12L	
		0006	13L	
		0007	14L	
		0008	15L	
		0009	16L	
		0010	17L	
		0011	18L	
		0012	19L	
		0013	20L	
		0014	21L	
		0015	22L	
501	VITC POS-2	0000	7L	This sets the position where the VITC signal is to be inserted. (The same line as for VITC POS-1 in 500 cannot be selected.)
		0001	8L	
		0002	9L	
		0003	10L	
		0004	11L	
		0005	12L	
		0006	13L	
		0007	14L	
		0008	15L	
		0009	16L	
		0010	17L	
		0011	18L	
		0012	19L	
		0013	20L	
		0014	21L	
		0015	22L	
502	VITC BLANK	0000	BLANK	This selects whether to output the VITC data to the positions selected by VITC POS-1 in 500 and VITC POS-2 in 501. 0: Data is not output. 1: Data is output.
		0001	THRU	
503	TCG REGEN	0000	TC&UB	This selects the signal to be regenerated when the time code generator (TCG) in the REGEN mode. 0: Both the time code and user bit are regenerated. 1: Only the time code is regenerated. 2: Only the user bit is regenerated.
		0001	TC	
		0002	UB	
504	REGEN MODE	0000	AS&IN	This selects whether the time code is to be regenerated during automatic editing using the unit's control panel. 0: Time code is regenerated with assemble or insert editing. 1: Time code is regenerated with assemble editing. 2: Time code is regenerated with insert editing. 3: Setting complies with REGEN/PRESET switch setting.
		0001	ASSEM	
		0002	INSRT	
		0003	SW	
505	EXT TC SEL	0000	LTC	This selects the time code to be used when an external time code is to be used. 0: The LTC of the TIME CODE IN connector is used. 1: The video signal VITC is used.
		0001	VITC	

The underline on the setting item denotes the initial setting.

USER menu

<TIME CODE> (continued)

Item		Setting		Description
No.	Superimposed display	No.	Superimposed display	
506	BINARY GP	0000 0001 0002 0003 0004 0005 0006 0007	000 001 010 011 100 101 110 111	This sets the usage status of the user bit of the time code generated by the TCG. 0: NOT SPECIFIED (character set not specified) 1: ISO CHARACTER (8 bits character set based on ISO646, ISO2022) 2: UNASSIGNED 1 (undefined) 3: UNASSIGNED 2 (undefined) 4: UNASSIGNED 3 (undefined) 5: PAGE/LINE 6: UNASSIGNED 4 (undefined) 7: UNASSIGNED 5 (undefined)
507	PHASE CORR	0000 0001	OFF ON	This selects whether to control the phase correction of the LTC generated by the TCG. 0: Phase correction control is not performed. 1: Phase correction control is performed.
508	TCG CF FLAG	0000 0001	OFF ON	This selects whether the CF flag of the TCG is to ON. 0: CF flag is OFF. 1: CF flag is ON.
511	TC OUT REF	0000 0001	V OUT TC_IN	This is used to switch the phase of the time code, which is output from the TIME CODE OUT connector, for the external LTC input when the TC INT/EXT switch is at the EXT position. (In EE mode only) 0: Time code is synchronized with output video signal. 1: Time code is synchronized with external time code input.
512	VITC OUT	0000 0001	SBC VAUX	This selects how the VITC which is to be superimposed onto the output video signal is to be output. 0: During recording: The input time code, which was selected by the setup menu No. 505 (EXT TC SEL) setting and TC INT/EXT switch, is output as the VITC. During playback: The time code recorded in the SBC area is output as the VITC. 1: During recording: The time code detected from the input video signal is output as the VITC. During playback: The time code recorded in the VAUX area is output as the VITC. **<Note>** The time code detected from the input video signal is automatically recorded in the VAUX area while pictures are being recorded.

The underline on the setting item denotes the initial setting.

SBC (sub code data) area:
This area is separate from the video and audio data area on the helical track. The time codes complying with SMPTE/EBU standards, recording dates and times, and other tape control information are stored here. As with the conventional LTC (linear time code), the time code can be read even during rewinding or fast forwarding. It can also be read out when the tape has stopped.

VAUX (video auxiliary data) area:
This area is to be found in the video data area on the helical track. The additional information relating to the video data is stored here.

USER menu

<VIDEO>

Item		Setting		Description
No.	Superimposed display	No.	Superimposed display	
601	INT BB SIG	0000 0001	OFF BB	This selects whether to generate the internal black burst signal. 0: Signal is not generated. 1: Signal is generated.
602	INPUT C KILL	0000 0001	B/W AUTO	This selects colour killer processing for the video input signals. 0: The signals are forcibly processed as B/W signals. 1: The signals are automatically processed.
603	OUT VSYNC	0000 0001	N-VF VF	This selects whether to float the vertical sync position of the video output in order to align the video output phase with the input in the EE/record/edit modes. 0: Signals are not floated. 1: Signals are floated.
604	V-MUTE SEL	0000 0001	N-MUTE LOW RF	This selects whether the video output signals are to be muted when the blank portion of the tape is detected during playback. 0: No muting. (Freeze) 1: Muting. (Set to gray.)
608	FREEZE SEL	0000 0001	FIELD FRAME	This selects the freeze mode for still pictures. 0: Field freeze. 1: Frame freeze. **<Note>** When frame freeze has been selected, the frame slow status is established with the slow setting.
610	OUT C KILL	0000 0001	B/W COLOUR	This selects chroma colour killer processing for the video output signals. 0: The signals are forcibly processed as B/W signals. 1: The signals are automatically processed.
611	EDH	0000 0001	OFF ON	This selects whether to superimpose EDH onto the serial output signals. 0: EDH is not superimposed. 1: EDH is superimposed. **<Note>** This item is valid when the optional serial interface board has been installed.
617	INTER-POLATE	0000 0001	OFF AUTO	Although vertical interpolation is performed automatically during slow-motion playback and the vertical motion of the playback picture is reduced, this menu item enables the interpolation operation to be forcibly turned off. 0: The interpolation operation is forcibly turned off. 1: The interpolation operation is automatically turned on during slow-motion playback.

The underline on the setting item denotes the initial setting.

ENGLISH

USER menu

<AUDIO>

Item		Setting		Description
No.	Superimposed display	No.	Superimposed display	
700	CH1 IN LV	0000 0001 0002	4dB 0dB -20 dB	This selects the audio input (CH1) reference level switching.
701	CH2 IN LV	0000 0001 0002	4dB 0dB -20 dB	This selects the audio input (CH2) reference level switching.
702	CUE IN LV	0000 0001 0002 0003	4dB 0dB -20 dB -20 dB	This selects the CUE input reference level switching.
703	CH1 OUT LV	0000 0001 0002	4dB 0dB -20 dB	This selects the audio output (CH1) reference level switching.
704	CH2 OUT LV	0000 0001 0002	4dB 0dB -20 dB	This selects the audio output (CH2) reference level switching.
705	CUE OUT LV	0000 0001 0002	4dB 0dB -20 dB	This selects the CUE output reference level switching.
706	MONIL OUT LV	0000 0001 0002	4dB 0dB -20 dB	This selects the audio monitor output (Lch) reference level switching.
707	MONIR OUT LV	0000 0001 0002	4dB 0dB -20 dB	This selects the audio monitor output (Rch) reference level switching.
708	MONI OUT	0000 0001	UNITY VAR	This selects the audio monitor output volume UNITY/VARIABLE reference switching. 0: The volume is output at the preset value. 1: The volume is linked with the headphones volume control.
709	EMPHASIS	0000 0001	OFF ON	This sets the emphasis ON or OFF.
710	CH1 IN SEL	0000 0001	ANA DIGI	This selects the CH1 input when USER SET has been selected by pressing the unit's AUDIO input selector switch. 0: Analogue input. 1: Digital input.
711	CH2 IN SEL	0000 0001	ANA DIGI	This selects the CH2 input when USER SET has been selected by pressing the unit's AUDIO input selector switch. 0: Analogue input. 1: Digital input.
712	DIGI IN SEL	0000 0001 0002	AES SIF1_2 SIF3_4	This selects the CH1 and CH2 digital input when USER SET has been selected by the unit's AUDIO input selector switch. 0: AES. 1: Serial I/F 1 and 2. 2: Serial I/F 3 and 4. **<Note>** Selections 1 and 2 are selected when the serial option is mounted.

The underline on the setting item denotes the initial setting.

<AUDIO> (continued)

Item		Setting		Description
No.	Superimposed display	No.	Superimposed display	
713	MONI CH SEL	<u>0000</u> 0001 0002	<u>MANU</u> AUTO1 AUTO2	This selects the monitor output. 0: The output is as selected in MONITOR SELECT. 1: The output defaults to CUE except when speed factor is between –0.43× and 1×, inclusive, in which case output is PCM AUDIO. 2: The output defaults to CUE except in PLAY mode, in which case output is PCM AUDIO. **<Note>** These menu settings are valid when CH1 or CH2 has been selected by the MONITOR SELECT L/R switches on the front panel. (When CUE has been selected, the CUE signal will be output at all speeds regardless of the above menu setting.)
714	REC CH1	<u>0000</u> 0001 0002	<u>CH1</u> CH2 CH1+2	This selects the input signal to be recorded on the audio CH1 track. 0: Audio input CH1 signal. 1: Audio input CH2 signal. 2: Mixed audio input CH1 and CH2 signal.
715	REC CH2	0000 <u>0001</u> 0002	CH1 <u>CH2</u> CH1+2	This selects the input signal to be recorded on the audio CH2 track. 0: Audio input CH1 signal. 1: Audio input CH2 signal. 2: Mixed audio input CH1 and CH2 signal.
716	REC CUE	<u>0000</u> 0001 0002 0003	<u>CUE</u> CH1 CH2 CH1+2	This selects the input signal recorded in CUE. 0: CUE input 1: The signal selected in Setup Menu No. 714 is recorded. 2: The signal selected in Setup Menu No. 715 is recorded. 3: A mixed signal of the signals selected in Setup Menu No. 714 and Setup Menu No. 715 is recorded.
718	DV OUTPUT	<u>0000</u> 0001 0002	<u>ST1</u> ST2 ST1+2	This selects the AUDIO CH1 and CH2 output signals during DV or DVCAM format playback. 0: The CH1 track signals are output to CH1 and the CH2 track signals to CH2. 1: The CH3 track signals are output to CH1 and the CH4 track signals to CH2. 2: The mixed CH1 and CH3 track signals are output to CH1 and the mixed CH2 and CH4 track signals to CH2. **<Note>** This item setting is valid only when the tape recorded on the four channels of the DV or DVCAM format is played back.
719	PB FADE	<u>0000</u> 0001 0002	<u>AUTO</u> CUT FADE	This selects the processing method for the audio edit points (IN point, OUT point) during playback. 0: According to the status during recording. 1: Forced CUT 2: Forced FADE
720	EMBEDDED AUD	0000 <u>0001</u>	OFF <u>ON</u>	This selects whether to superimpose the audio data onto the serial output. 0: Data is not superimposed. 1: Data is superimposed. **<Note>** This item is valid when the optional serial interface board has been installed.
722	INT SG	<u>0000</u> 0001	<u>OFF</u> ON	This selects whether to use the internal signals as the audio input signals. 0: The internal signals are not selected. 1: The internal signals are selected. **<Note>** The internal signals have a frequency of 1 kHz.

The underline on the setting item denotes the initial setting.

ENGLISH

USER menu

<AUDIO> (continued)

Item		Setting		Description
No.	Superimposed display	No.	Superimposed display	
723	DV PB ATT	0000 0001	OFF ON	This selects the audio output level for DV or DVCAM format playback. 0: The audio output level is not attenuated. 1: The audio output level is attenuated (reduced). **<Notes>** As indicated below, whether the setting takes effect or not depends on the size of the cassette tape used. 1. When an “L” size cassette is used The setting takes effect only when “DV” or “DVCAM” has been selected as the setting for setup menu No. 108 (FORMAT SEL). 2. When an “M” size cassette is used The setting does not take effect. 3. When an “S” size cassette used The setting takes effect.
724	MONI SEL INH	0000 0001	OFF ON	This selects whether to allow (enable) or prohibit (disable) the operation of the MONITOR SELECT and MONITOR SET buttons on the front panel. 0: The buttons can be operated. 1: Operation of the buttons is prohibited.
725	CUE SLOW	0000 0001	STEP LINEAR	This selects the tape travel status (CUE track playback status) during SLOW playback. 0: Priority is given to the output picture, and tape travel is set to the step feed status. 1: Priority is given to CUE track playback, and the tape travel is set to the linear status. **<Notes>** When “1” (LINEAR) has been set: • It may not be possible to achieve as clear a picture as in the STEP mode. • The CTL counter may not operate properly.
726	CUE OUT	0000 0001	NORMAL DIRECT	This selects the output signals from the CUE OUT connector. 0: The timing is aligned with the output picture. 1: The signals recorded on the tape are output with no delay. **<Note>** When “1” (DIRECT) has been set, the output picture and CUE output timing will differ.
727	MONI MIX L	0000 0001	OFF CH1+2	This enables mixed signals to be selected for the monitoring through the headphones. 0: The signals are not mixed. 1: The CH1 and CH2 signals are mixed and output to the left channel.
728	MONI MIX R	0000 0001	OFF CH1+2	This enables mixed signals to be selected for the monitoring through the headphones. 0: The signals are not mixed. 1: The CH1 and CH2 signals are mixed and output to the right channel.
729	REC PT MUTE	0000 0001	OFF ON	This selects whether to mute the sound at the joins in the recording during playback in the DV or DVCAM format. 0: The sound is not muted. 1: The sound is muted.
730	CUE OUT SEL	0000 0001	OFF ON	This selects whether the cue signal is to be output to the main line system output in the search mode. 0: The cue signal is not output. 1: The cue signal is output. (This applies only when a setting other than MANU has been selected for setup menu item No. 713 (MONI CH SEL).)

The underline on the setting item denotes the initial setting.

USER menu

<V BLANK>

Item		Setting		Description
No.	Superimposed display	No.	Superimposed display	
800	ADD LINE	0000	OFF	This selects the mode in which the input signals are recorded on additional lines. 0: No additional line recording. 1: For 1-line recording of the input signals in the 422 mode. 2: For 1-line recording of the input signals in the 411 mode. 3: For the 1-line recording of input signals in their original form as the luminance signal. 4: For the 1-line recording of only the luminance signal after the input signals have been separated into the luminance and chrominance signals. 5: For the 1-line recording of only the chrominance signal after the input signals have been separated into the luminance and chrominance signals. 6: For the 2-line recording of input signals in their original form as the luminance signal. 7: For the 2-line recording of only the luminance signal after the input signals have been separated into the luminance and chrominance signals. 8: For the 2-line recording of only the chrominance signal after the input signals have been separated into the luminance and chrominance signals. **<Notes>** • When a setting from 1 to 8 is selected and the STOP button is pressed, operation moves to the sub screen and the recording line or lines can be selected. Press the STOP button again to return from the sub screen. • Depending on the additional line recording mode, the number of lines for recording teletext will differ.
		0001	YC422	
		0002	YC411	
		0003	Y1_B/W	
		0004	Y1_BPF	
		0005	C1	
		0006	Y2_B/W	
		0007	Y2_BPF	
		0008	C2	
Sub screen				
00	REC LINE	0000	7L	For selecting the additional line where the signals are to be recorded.
		⋮	⋮	
		0015	22L	
		0016	320L	
		⋮	⋮	
		0030	334L	
		0031	623L	
01	REC LINE2	0000	7L	For selecting the additional line where the signals are to be recorded. **<Note>** This menu item is not displayed when a setting from 1 to 5 has been selected as the additional line mode.
		⋮	⋮	
		0015	22L	
		0016	320L	
		⋮	⋮	
		0018	322L	
		⋮	⋮	
		0030	334L	
		0031	623L	

The underline on the setting item denotes the initial setting.

ENGLISH

USER menu

<V BLANK> (continued)

Item		Setting		Description
No.	Superimposed display	No.	Superimposed display	
803	TELETEXT DET	<u>0000</u>	<u>OFF</u>	This selects the method used to detect the lines in which the teletext signals are to be recorded. 0: The teletext signals are not recorded. 1: The teletext signals are automatically detected and recorded. 2: The lines in which the teletext signals are to be recorded are selected and set. **<Notes>** • When setting “1 (AUTO)” is selected, it may not be possible to record the teletext signals in all the lines depending on the setting of setup menu item No. 800 (ADD LINE). • When setting “2 (MANU)” is selected and the STOP button is pressed, operation transfers to the sub-screen, and the number of recording lines can be selected. To return from the sub-screen, press the STOP button again. • The number of lines in which the teletext signals can be recorded depends on the setting of setup menu item No. 800 (ADD LINE).
		0001	AUTO	
		0002	MANU	
Sub screen				
00	REC LINE1	<u>0000</u>	<u>OFF</u>	This selects the lines in which the teletext signals are to be recorded. Factory mode settings REC LINE1: OFF REC LINE2: OFF REC LINE3: OFF REC LINE4: OFF REC LINE5: OFF REC LINE6: OFF REC LINE7: OFF REC LINE8: OFF REC LINE9: OFF REC LINE10: OFF REC LINE11: OFF REC LINE12: OFF REC LINE13: OFF REC LINE14: OFF
:	:	0001	7&320	
:	:	0002	8&321	
:	:	0003	9&322	
:	:	0004	10&323	
:	:	0005	11&324	
:	:	0006	12&325	
:	:	0007	13&326	
:	:	0008	14&327	
:	:	0009	15&328	
:	:	0010	16&329	
:	:	0011	17&330	
:	:	0012	18&331	
:	:	0013	19&332	
:	:	0014	20&333	
:	:	0015	21&334	
13	REC LINE14	0016	22	
804	BLANK LINE	<u>0000</u>	<u>BLANK</u>	This selects blanking ON or OFF for the vertical blanking period of the video signals. 0: Blanking is effected forcibly for all lines. 1: No blanking is effected for any of the lines. 2: Blanking ON or OFF is selected for each line. **<Note>** When setting “2 (MANU)” is selected and the STOP button is pressed, operation transfers to the sub-screen, and ON or OFF can be selected for each line. To return from the sub-screen, press the STOP button again.
		0001	THRU	
		0002	MANU	

The underline on the setting item denotes the initial setting.

<V BLANK> (continued)

Item		Setting		Description
No.	Superimposed display	No.	Superimposed display	
Sub screen				
00	LINE 7&320	0000 0001	BLANK THRU	0: Blanking is forcibly effected. 1: No blanking is effected.
01	LINE 8&321	0000 0001	BLANK THRU	0: Blanking is forcibly effected. 1: No blanking is effected.
02	LINE 9&322	0000 0001	BLANK THRU	0: Blanking is forcibly effected. 1: No blanking is effected.
03	LINE 10&323	0000 0001	BLANK THRU	0: Blanking is forcibly effected. 1: No blanking is effected.
04	LINE 11&324	0000 0001	BLANK THRU	0: Blanking is forcibly effected. 1: No blanking is effected.
05	LINE 12&325	0000 0001	BLANK THRU	0: Blanking is forcibly effected. 1: No blanking is effected.
06	LINE 13&326	0000 0001	BLANK THRU	0: Blanking is forcibly effected. 1: No blanking is effected.
07	LINE 14&327	0000 0001	BLANK THRU	0: Blanking is forcibly effected. 1: No blanking is effected.
08	LINE 15&328	0000 0001	BLANK THRU	0: Blanking is forcibly effected. 1: No blanking is effected.
09	LINE 16&329	0000 0001	BLANK THRU	0: Blanking is forcibly effected. 1: No blanking is effected.
10	LINE 17&330	0000 0001	BLANK THRU	0: Blanking is forcibly effected. 1: No blanking is effected.
11	LINE 18&331	0000 0001	BLANK THRU	0: Blanking is forcibly effected. 1: No blanking is effected.
12	LINE 19&332	0000 0001	BLANK THRU	0: Blanking is forcibly effected. 1: No blanking is effected.
13	LINE 20&333	0000 0001	BLANK THRU	0: Blanking is forcibly effected. 1: No blanking is effected.
14	LINE 21&334	0000 0001	BLANK THRU	0: Blanking is forcibly effected. 1: No blanking is effected.
15	LINE 22&335	0000 0001	BLANK THRU	0: Blanking is forcibly effected. 1: No blanking is effected.

The underline on the setting item denotes the initial setting.

USER menu

<MENU>

Item		Setting		Description
No.	Superimposed display	No.	Superimposed display	
A00	LOAD	<u>0000</u>	<u>USER2</u>	This selects the user file whose contents will be loaded into USER1. 0: The USER2 file contents are loaded. 1: The USER3 file contents are loaded. 2: The USER4 file contents are loaded. 3: The USER5 file contents are loaded. **<Note>** When the SET button is pressed after loading, the setting will be stored in the memory. When the MENU button is pressed, the setting will not be changed.
		0001	USER3	
		0002	USER4	
		0003	USER5	
A01	SAVE	<u>0000</u>	<u>USER2</u>	This selects the user file into which the USER1 settings will be saved. 0: The settings are saved in USER2. 1: The settings are saved in USER3. 2: The settings are saved in USER4. 3: The settings are saved in USER5. 4: This display appears when all the user files are in the change prohibit status. **<Notes>** • User files whose status have been set to change prohibit cannot be selected. • When all the user files are in the change prohibit status, the "LOCKED" display appears and the contents cannot be saved.
		0001	USER3	
		0002	USER4	
		0003	USER5	
		0004	LOCKED	
A02	P.ON LOAD	<u>0000</u>	<u>OFF</u>	This loads the contents of the selected user file into USER1 and it starts operation with the USER1 settings when the power is turned on. 0: Operation is started with the settings of the previously set user file. 1: The contents of USER2 are loaded into USER1 and operation is started with the USER1 settings. 2: The contents of USER3 are loaded into USER1 and operation is started with the USER1 settings. 3: The contents of USER4 are loaded into USER1 and operation is started with the USER1 settings. 4: The contents of USER5 are loaded into USER1 and operation is started with the USER1 settings.
		0001	USER2	
		0002	USER3	
		0003	USER4	
		0004	USER5	
A03	MENU LOCK	<u>0000</u>	<u>OFF</u>	This selects whether to set or release the user file (USER2 – USER5) lock mode. 0: The lock is released (changes can be made). 1: The lock is set (changes are prohibited). **<Note>** The lock cannot be set for USER1.
		0001	ON	

The underline on the setting item denotes the initial setting.

<Notes>

- No. A00 (LOAD), No. A01 (SAVE) and No. A02 (P.ON LOAD) are the menu items which can be set only for USER1. They are not displayed with the USER2 – USER5 files.
- No. A03 (MENU LOCK) is the menu item which can be set only for the USER2 – USER5 files. It is not displayed with USER1.

Time code/user bit

Time code

The time code is used when the time code signal generated by the time code generator (time code signal generator) is to be recorded on the tape, its values are to be read by the time code reader (time code signal reader), and the absolute position of the tape is to be displayed in increments of hours, minutes, seconds and frames.

The time code is written in the sub-code area (data area) of the helical track. This enables insert editing to be conducted independently using the time code alone. In addition, the VTR's playback speed can be read from the stop mode to slow-motion playback up to high-speed play (approx. 100X normal speed).

The time code values are indicated using the display and superimpose functions.

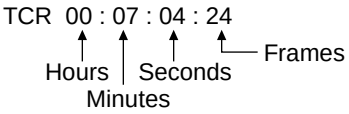

User bit

"User bit" refers to the 32-bit (8-digit) data frame among the time code signals which has been released to users. It enables operator numbers values to be recorded.
The alphanumeric characters which can be used for the user bit are the figures 0 to 9 and the letters A to F.

<Note>
Time code and user's bit control during tape play is exercised by the data recorded in the SBC area. The data recorded in this area includes the data that appears on the display or is superimposed on the TV monitor screen and the communication data that is transferred to the editing controller.

1. Setting the internal time code

1 Place the VTR in the stop mode.

2 Set the TC/CTL switch to TC.

3 Set the TC INT/EXT switch to INT. (Internal time code selected)

4 Set the REC RUN/FREE RUN switch position.
REC RUN: The time code runs at the same time as the recording proceeds.
FREE RUN: The time code runs in the same way as the time regardless of the VTR's operation.

5 Set the REGEN/PRESET switch position.
REGEN: Continuity is maintained with the recorded time code before editing.
(Detailed settings are also possible using the menu settings. See the menu items below.)
Setup menu No. 503 (TCG REGEN)
Setup menu No. 504 (REGEN MODE)
PRESET: Recording starts from the value set with the TC SET button.
<Note>
During auto editing, REGEN will be selected by the setup menu No. 504 setting even if the switch has been set to the PRESET position.

6 Set the TC SET button.
Use the TC SET button to set the start number of the time code or user bit.

1 Press the SHIFT button.
The leftmost digit flashes.

2 Press the ADJ button to change the value.
Each time the button is pressed, the number changes. The setting range is given below.
- **Time code**
  00:00:00:00 – 23:59:59:24
- **User bit**
  00 00 00 00 – FF FF FF FF

3 Repeat steps 1 and 2 to change the value.

4 When the setting of the start number is completed, press the START button. In the FREE RUN mode, the time code now starts running.

5 Proceed with the recording or editing.

2. Setting the external time code (TC switch → EXT)

1 Place the VTR in the stop mode.

2 Set the TC/CTL switch to TC.

3 Set the TC INT/EXT switch to EXT. (External time code selected)

4 Setup menu No. 505 (EXT TC SEL) can be set as follows.
LTC: The LTC signal input to the TIME CODE IN connector (XLR) on the rear jack panel is recorded as the time code.
<Note> The LTC signal must be synchronized with the video signal.
VITC: The input video signal's VITC is recorded as the time code.

1 Place the unit in the stop mode.

2 Set the TC/CTL button to TC.

3 Set the TC/UB switch to TC or UB.
TC: The time code is displayed.
UB: The user bit is displayed.
- When it is no longer possible to read the time code, it is interpolated using the CTL signal.

4 Press the PLAY button.
Playback now commences, and the time code appears on the display.
When setup menu No. 006 (SUPER) is ON, the time code value is superimposed onto the video signal from the VIDEO OUT 3 connector.

<Note>
When the time code signal cannot be read, the time code is automatically interpolated by the CTL signal.
The display appears as shown below.

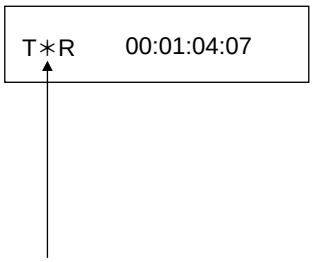

When the time code signal cannot be read,
an asterix (∗) is displayed.

Superimpose screen

The control signals, time code, etc. are displayed using abbreviations.

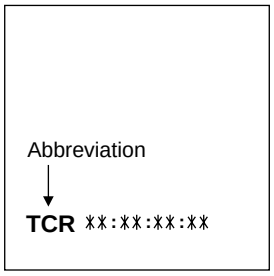

CTL = control signal
TCR = TC time code reading
UBR = TC user bit reading

TV monitor

Characters displayed

The background of characters superimposed on the display can be changed using setup menu No. 007 (CHARA TYPE).

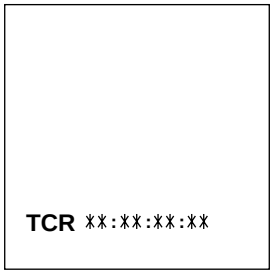

TV monitor

Display position

The position of the characters superimposed on the display can be changed using setup menus No. 001 (CHARA H-POS) and No. 002 (CHARA V-POS).

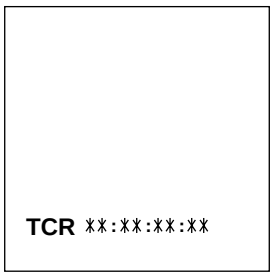

TV monitor

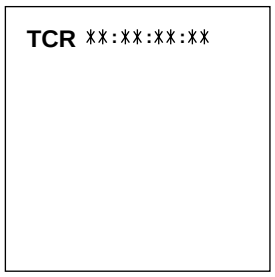

TV monitor

Operation mode

The VTR's operation mode can also be displayed using setup menu No. 003 (DISPLAY SEL).

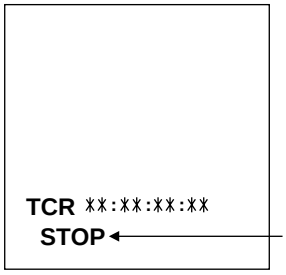

VTR operation mode

TV monitor

Servo reference

This unit automatically selects the input video signal selected by the INPUT switch, the reference video signal supplied from the REF VIDEO input connector or the internal sync signal as the servo reference signal.
When the signal is selected, the unit's mode and servo reference stand in the relationship shown in the flowchart presented below.

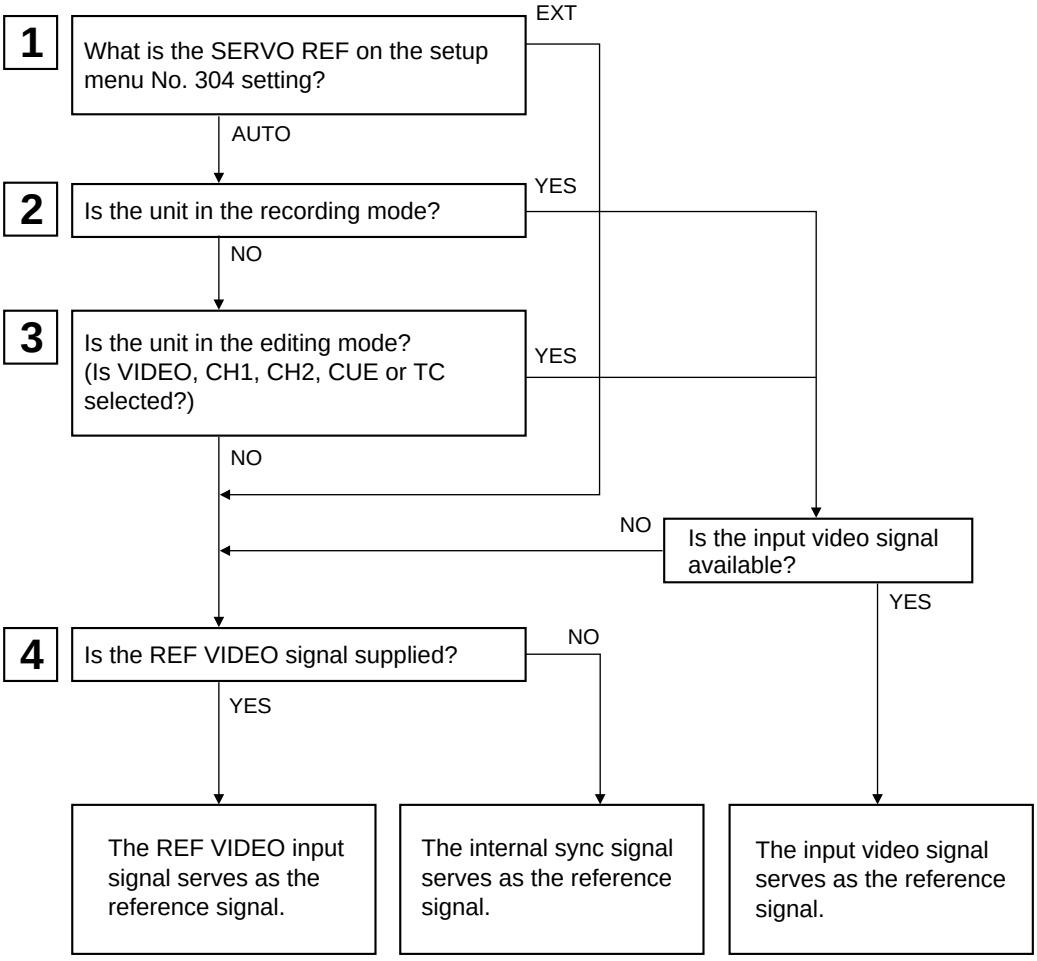

Servo reference setting tables

The servo reference signal is switched as shown in the tables below depending on the servo reference setting, deck mode and what input signal is available. When the mode is transferred to editing or recording/playback, the image may be disturbed and the transfer may be delayed if the references during playback and recording do not match.

■ During playback or special playback

SERVO REF on the setup menu No. 304 position	Input signal status		Reference signal (servo reference)
	VIDEO IN signal	REF IN signal	
AUTO	○	○	REF IN signal
	○	×	Internal sync signal
	×	○	REF IN signal
	×	×	Internal sync signal
EXT	○	○	REF IN signal
	○	×	Internal sync signal
	×	○	REF IN signal
	×	×	Internal sync signal

■ During recording or editing

SERVO REF on the setup menu No. 304 position	Input signal status		Reference signal (servo reference)
	VIDEO IN signal	REF IN signal	
AUTO	○	○	VIDEO IN signal
	○	×	VIDEO IN signal
	×	○	REF IN signal
	×	×	Internal sync signal
EXT	○	○	REF IN signal
	○	×	Internal sync signal
	×	○	REF IN signal
	×	×	Internal sync signal

"○" denotes that the signal is supplied: "×" denotes that the signal is not supplied.

Audio V Fade Function

When editing tapes, the edit point splicing selection (setup menu No. 309 and 310) information is recorded on the tape. This information is then sensed during playback, and V fade or cut processing is automatically performed for these sections. [However, only when the playback fade selection (No. 719) is AUTO.]

When the edit point splicing selection (setup menu No. 309 and 310) is CUT

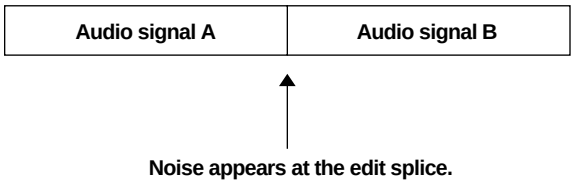

When the edit point splicing selection (setup menu No. 309 and 310) is FADE

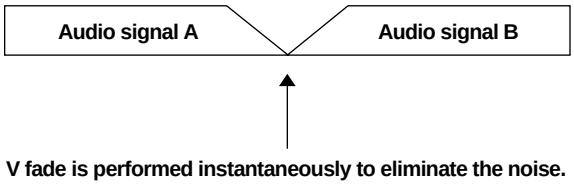

<Notes>

- When the playback fade selection (No. 719) is CUT, cut processing is performed for all splices.
- When the playback fade selection (No. 719) is FADE, V fade processing is performed for all splices.

ENGLISH

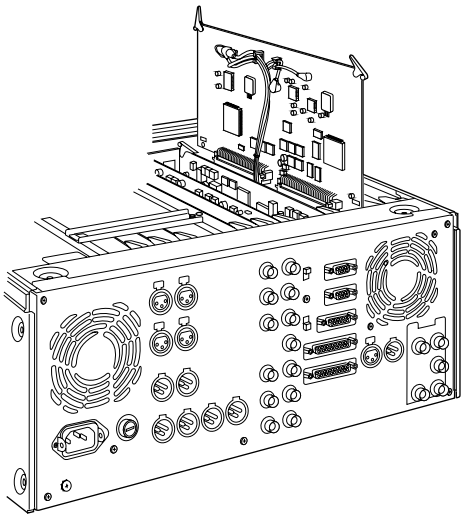

Printed circuit board	Abbr. name	Full name	Function	Factory setting
F8 board ADDA1	SW1	Audio Input Impedance SW	This sets the CH1 audio input impedance. HIGH/600Ω	HIGH
	SW41	Audio Input Impedance SW	This sets the CH2 audio input impedance. HIGH/600Ω	HIGH
H2 board CUE	SW101	Cue Input Impedance SW	This sets the CUE input impedance.	HIGH
F4 board	SW940	Component P_B/P_R Output level selector	This sets the component P_B/P_R output level when connecting with the editor. MⅡ : MⅡ level BETA : ß-CAM level	BETA

Rack mounting

The unit can be mounted into a 19-inch standard rack if the optional rack-mounting adaptors (AJ-MA75P) are used. For the installation rails, it is recommended that the rail and bracket for 18" length (model number CC3001-99-0400) of CHASSIS TRAK be used. (The complete slide rail and bracket unit is not available from Panasonic) For further details, consult with your dealer.

1 Remove the screws on the left and right sides of the unit.

2 Use the removed screw to attach the inner members of the slide rails.

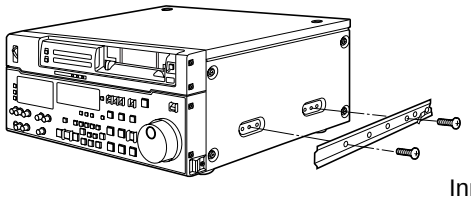

Inner member

The length of the screws used is subject to restriction. If some of the mounting screws have been lost or misplaced, use screws which are less than 10 mm long in their place. Use four screws to secure each inner member.

3 Attach the outer member brackets to the rack.
Check that the height is the same for the left and right brackets.

4 Attach the AJ-MA75P rack-mounting adaptors with included 4 screws.

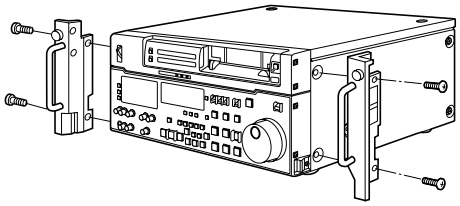

5 Remove the 4 rubber legs from the bottom of the unit, and install the unit in the rack.
After the unit has been installed, check that it moves smoothly along the rails.

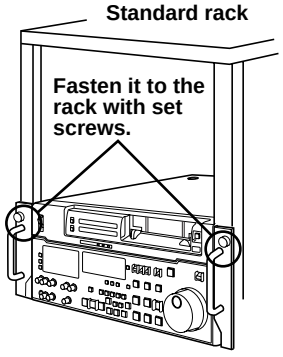

<Notes>

- Keep the temperature inside the rack to between 5°C and 40°C.
- Bolt the rack securely to the floor so that it will not topple over when the VTR is drawn out.

Video head cleaning

This unit has an auto head cleaning function which automatically reduces the dirt on the heads. However, to further increase the unit's reliability, it is recommended that its video heads be cleaned every day.
Use the cleaning fluid designated by Panasonic.

Condensation

Condensation occurs due to the same principle involved when droplets of water form on a window pane of a heated room. It occurs when the unit or tape is moved between places where the temperature or humidity varies greatly or when, for instance:

- It is moved to a very humid place full of steam or a room immediately after it has been heated up.
- It is suddenly moved from a cold location to a hot or humid location.

When moving the unit to locations such as these, leave it standing for about 10 minutes rather than switching on the power immediately.
If condensation has formed on or in the unit, the AUTO OFF lamp lights and the cassette tape is automatically ejected.
Keep the power supplied and simply wait until the AUTO OFF lamp goes off.

- Do not insert fingers or any objects into the video cassette holder.
- Avoid operating or leaving the unit near strong magnetic fields. Be especially careful of large audio speakers.
- Avoid operating or storing the unit in an excessively hot, cold, or damp environment as this may result in damage both to the recorder and to the tape.
- Do not spray any cleaner or wax directly on the unit.
- If the unit is not going to be used for a length of time, protect it from dirt and dust.
- Do not leave a cassette in the recorder when not in use.
- Do not block the ventilation slots of the unit.
- Use this unit horizontally and do not place anything on the top panel.
- Cassette tape can be used only for one-side, one direction recording. Two-way or two-track recordings cannot be made.
- Cassette tape can be used for either Colour or Black & White recording.
- Do not attempt to disassemble the recorder. There are no user serviceable parts inside.
- If any liquid spills inside the recorder, have the recorder examined for possible damage.
- Refer any needed servicing to authorized service personnel.

Error messages

When a warning occurs in this unit, the warning lamp lights up.
Opening the DIAG menu will display the warning description on the counter display and the monitor. Also, when an abnormal operation is detected in this unit, the AUTO OFF lamp lights up and a message appears on the counter display.

DIAG menu

This display the VCR information.
VCR information includes “WARNING” information and “HOURS METER” (usage time) information. A DIAG menu appears on the monitor when the monitor is connected to the VIDEO OUT 3 connector on the connector section.

Displaying the DIAG menu

1 Press the DIAG button.
The DIAG menu screen is displayed on the monitor, and the message is displayed on the counter display.

2 The “WARNING” information and “HOURS METER” information can be switched by pressing the search buttons.

3 Press the DIAG button again to return to the original display.

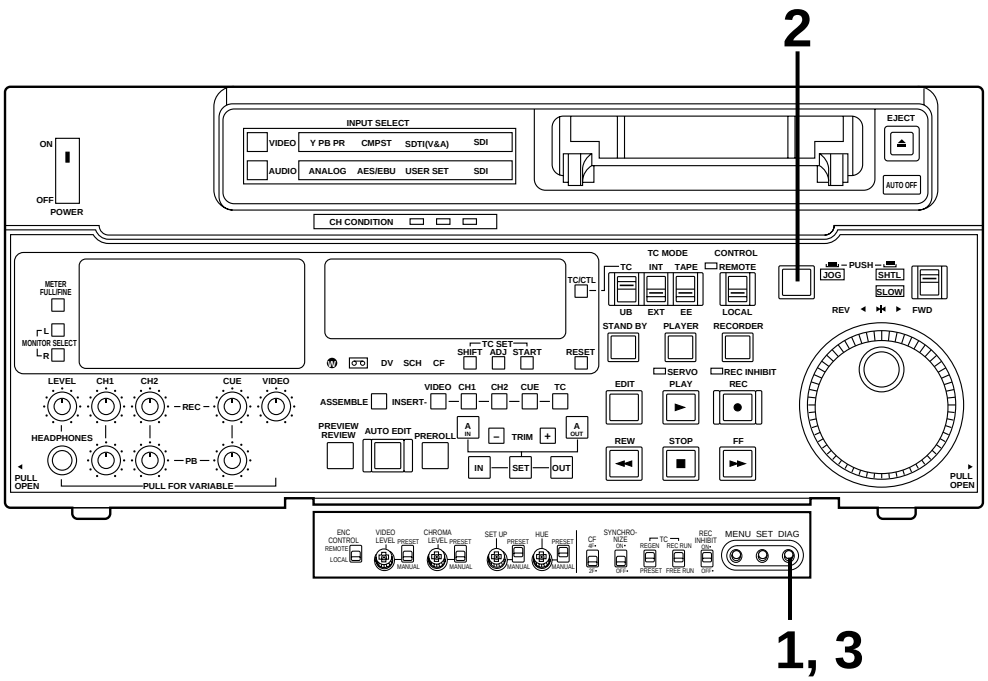

“WARNING” information display

- A warning message is displayed whenever a warning occurs (the warning lamp lights up). When warnings have not been detected, “NO WARNING” is displayed.
- When multiple warning occur, the descriptions for each warning can be checked by turning the search dial.

Error messages

Displaying the “HOURS METER” information

Turn the search dial to move the cursor (∗). The description for the item where the cursor is located is shown on the counter display.

Item No.	Item	Description
H00	OPERATION	Displays the time that the power has been supplied in one-hour units.
H01	DRUM RUN	Displays the time that the drum has been rotating in one-hour units.
H02	TAPE RUN	Displays the time that the tape has been running during FF, REW, PLAY, SEARCH (JOG, VAR, SHTL), REC, and EDIT modes (except for STILL in the JOG, VAR or SHTL mode) in one-hour units.
H03	THREADING	The number of times for threading/unthreading is displayed in single units.
H11	DRUM RUN r	Displays the time that the drum has been rotating in one-hour units. (Can be reset)
H12	TAPE RUN r	Displays the time that the tape has been running during FF, REW, PLAY, SEARCH (JOG, VAR, SHTL), REC, and EDIT modes (except for STILL in the JOG, VAR or SHTL mode) in one-hour units. (Can be reset)
H13	THREADING r	The number of times for threading/unthreading is displayed in single units. (Can be reset)
H30	POWER ON	This displays the number of times the power has been turned on in 1-time increments.

<Notes>

- The resettable items in the “HOURS METER” information are reset by the shop when performing maintenance or other work.
- The search buttons and the search dial cannot be operated while the DIAG menu is displayed.

If “T&S&M” is selected in the setup menu No. 003 (DISPLAY SEL), a message appears in the mode display whenever a warning or error occurs. When multiple events occur, the event with the highest priority is displayed.

Priority	Display	Description
High ↕ Low	Error messages (See error message table)	When an abnormal operation is detected in this unit, the AUTO OFF lamp lights up and an error message is displayed.
	INT SG	If “BB” in No. 601 (INT BB SIG) in the setup menu is selected or when ON has been selected as the setup menu No. 722 (INT SG) setting, pressing the REC button or the EDIT button (E to E mode) will display “INT SG” for the first two seconds. This is also displayed for the first two seconds when starting editing.
	NO INPUT	If there is no input signal (except for analogue audio) to the connector selected using the INPUT SELECT switch, pressing the REC button or the EDIT button (E to E mode) will display “NO INPUT” for the first two seconds. This is also displayed for the first two seconds when starting editing.
	Warning messages (See error message table)	When a warning occurs in this unit, the warning lamp lights up and a warning message is displayed. When multiple warnings occur, the warning with the highest priority is displayed.

Warning messages

Priority	Monitor display	Description	VTR operation
High ↕ Low	FAN STOP	This is displayed when the fan motor stops.	Operation continues
	SERVO NOT LOCKED	This is displayed when the servo is not locked for three or more seconds during playback, recording, or editing.	Operation continues
	LOW RF	This is displayed when envelope levels approximately 1/3 that of normal levels are detected for more than one second during playback, recording, or editing.	Operation continues
	HIGH ERROR RATE	This is displayed when the error rate increases and correction/interpolation is performed on either the video or audio playback signal.	Operation continues
	OVER RECORDING	When voice-over editing is performed using the internal audio memory, this message appears if the duration of the signals recorded in the memory exceeds 20 seconds.	Operation continues

Table of AUTO OFF Error messages

Counter display	Monitor display	Description	VTR operation (Restart condition)
CAP ROTATE TOO SLOW	**CAP ROTA TOO SLOW**	If the capstan motor speed is abnormally low, the AUTO OFF lamp lights, and the message display flashes.	STOP (POWER OFF→ON)
CAP TENSION ERROR	**CAP TENSION ERROR**	If an abnormal tension at the supply side is detected in the capstan mode, the AUTO OFF lamp lights, and the message display flashes.	STOP (POWER OFF→ON)
DEW	**DEW**	If condensation is detected, the AUTO OFF lamp lights, the message display flashes, and the VTR is transferred to the eject mode. After the tape is ejected, the drum rotates in order to eliminate the condensation. When the condensation has been eliminated, the AUTO OFF lamp and message display go off, and the VTR can be used. **<Notes>** 1) If condensation is detected in the eject mode, the drum starts rotating as soon as it is detected. 2) If condensation is detected when the cassette has been inserted, the drum rotation is stopped, and after the tape is ejected, the drum starts rotating.	EJECT (Normal operation resumed after condensation is eliminated)
DRUM ROTATE TOO FAST	**DRUM ROTA TOO FAST**	If the cylinder motor speed is abnormally high, the AUTO OFF lamp lights, and the message display flashes.	STOP (POWER OFF→ON)
DRUM ROTATE TOO SLOW	**DRUM ROTA TOO SLOW**	If the cylinder motor speed is abnormally low, the AUTO OFF lamp lights, and the message display flashes.	STOP (POWER OFF→ON)
E-FF	**E-FF**	If the tape start and tape end are detected simultaneously either during or after loading, the AUTO OFF lamp lights, and the message display flashes.	STOP (POWER OFF→ON)
FRONT LOAD ERROR	**FRONT LOAD ERROR**	The AUTO OFF lamp lights and the message display flashes when the take-up reel has been rotating idly for a fixed period of time while the start/end processing operation during loading (half position) is being performed or when it was impossible to eject the tape.	STOP (POWER OFF→ON)
FRONT LOAD MOTOR	**FRONT LOAD MOTOR**	If the cassette does not move up even when 6 seconds have elapsed since the VTR was transferred to the eject mode, the AUTO OFF lamp lights, and the message display flashes. **<Note>** If the cassette does not move down inside the machine even when 6 seconds have elapsed since the cassette was inserted, the VTR is transferred to the eject mode.	STOP (POWER OFF→ON)
LOADING MOTOR	**LOADING MOTOR**	When the unloading operation is not completed within 6 seconds, the AUTO OFF lamp lights, and the message display flashes. **<Note>** When the loading operation is not completed within 6 seconds, the VTR is transferred to the eject (unloading) mode.	STOP (POWER OFF→ON)

ENGLISH

Table of AUTO OFF Error messages

Counter display	Monitor display	Description	VTR operation (Restart condition)
REEL DIR UNMATCH	**REEL DIR UNMATCH**	If the reel motor at the take-up side is running in the reverse direction, the AUTO OFF lamp lights, and the message display flashes.	STOP (POWER OFF→ON)
REEL TENSION ERROR	**REEL TENSION ERROR**	If an abnormal tension at the supply side is detected in the reel mode, the AUTO OFF lamp lights, and the message display flashes.	STOP (POWER OFF→ON)
SERVO COMM ERROR	**SERVO COMM ERROR**	When the servo microcomputer does not follow the instructions of the system control microcomputer even when 10 seconds have elapsed, the AUTO OFF lamp lights, and the message display flashes.	STOP (POWER OFF→ON)
SERVO CONTROL ERROR	**SERVO CONTROL ERR**	When there is no response from the servo microcomputer for 1 or more seconds, the AUTO OFF lamp lights, and the message display flashes.	STOP (POWER OFF→ON)
SERVO ERROR	**SERVO ERROR**	When only the servo microcomputer was reset in an instantaneous power failure, the AUTO OFF lamp lights, and the message display flashes.	STOP (POWER OFF→ON)
S-FF/REW TIMEOVER	**S-FF/REW TIMEOVER**	If the start/end processing operation is not completed, the AUTO OFF lamp lights, and the message display flashes.	STOP (POWER OFF→ON)
S REEL ROTA TOO FAST	**S REEL TOO FAST**	If the supply reel motor should rotate at an abnormally fast rate, the AUTO OFF lamp lights, and the message display flashes.	STOP (POWER OFF→ON)
S REEL TORQUE ERROR	**S REEL TORQUE ERR**	If an abnormal torque applied to the supply reel motor is detected, the AUTO OFF lamp lights, and the message display flashes.	STOP (POWER OFF→ON)
T REEL ROTA TOO FAST	**T REEL TOO FAST**	If the take-up reel motor should rotate at an abnormally fast rate, the AUTO OFF lamp lights, and the message display flashes.	STOP (POWER OFF→ON)
T REEL TORQUE ERROR	**T REEL TORQUE ERR**	If an abnormal torque applied to the take-up reel motor is detected, the AUTO OFF lamp lights, and the message display flashes.	STOP (POWER OFF→ON)
UNLOAD ERROR	**UNLOAD ERROR**	If the tape has not been wound up during unloading, the AUTO OFF lamp lights, and the message display flashes.	STOP (POWER OFF→ON)
WINDUP ERROR	**WINDUP ERROR**	If the tape was not wound up at less than the standard speed (1×) when the total tape amount was not detected or if abnormal tape slack or tension was detected at speeds above 1× after the total tape amount was detected, the AUTO OFF lamp lights, and the message display flashes.	STOP (POWER OFF→ON)
WINDUP REEL NOT ROTA	**W-UP REEL NOT ROTA**	If, after the cassette has been inserted, the tape take-up reel has not wound up the tape at the standard speed (1×) or faster while the total tape amount is not detected and while the tape is travelling in the forward or reverse direction, the AUTO OFF lamp lights, and the message display flashes.	STOP (POWER OFF→ON)

RS-232C interface

1. Introduction

(1) The VTR can be operated by commands when the RS-232C interface is used.
(See command table on pages 96 – 98.)

(2) Conditions for acknowledging commands from RS-232C interface
The front panel REMOTE/LOCAL switch must be at REMOTE.
The setup menu item No. 204 "RS232C SEL" must be ON.

If the above conditions are not met, [ACK] + [STX]ER001[EXT] is returned to the external unit.
Whether the [ACK] code is returned depends on the setting which has been selected for setup menu item No. 209 "RETURN ACK".

ENGLISH

2. Hardware specifications

External interface specifications

1) Connector specifications

Connector: D-SUB 25-pin (crossover cable supported)

Pin No.	Signal	Circuit name	Description
1	FG	Protective ground	Frame ground
2	RXD	Received data	Data is sent to PC.
3	TXD	Transmitted data	Data is received from PC.
4	CTS	Clear to send	Shorted with pin 5.
5	RTS	Request to send	Shorted with pin 4.
6	DTR	Data terminal ready	No processing
7	SG	Signal ground	Signal ground
20	DSR	Data set ready	+ voltage output after communication enable status

2) Example of connection with controller (PC)

■ **Using crossover cable with D-SUB 25-pin connectors**

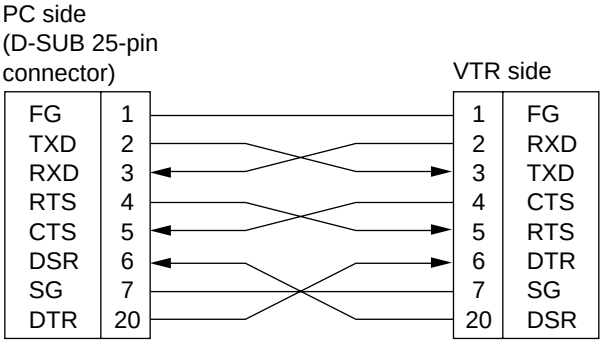

■ **Using crossover cable with D-SUB 9-pin and 25-pin connectors**

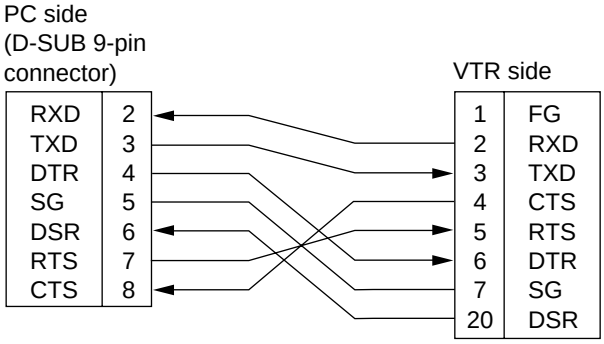

3. Software specifications

Protocol

1) Communication parameters

Communication system	Asynchronous, full duplex
Communication speed	300/600/1200/2400/4800/9600
Bit length	7 bit/8 bit
Stop bit	1 bit/2 bit
Parity bit	NONE/ODD/EVEN
ACK code	ACK code returned/ACK code not returned **<Note>** The ACK code is what is returned from the VTR to the controller when data has been successfully sent from the controller.

The underlining indicates the factory settings.

Any changes to the settings can be made using the setup menu items listed below.

Communication parameter	Setup menu item
Communication speed	No. 205 BAUD RATE
Bit length	No. 206 DATA LENGTH
Stop bit	No. 207 STOP BIT
Parity bit	No. 208 PARITY
ACK code	No. 209 RETURN ACK

2) Send format [controller (PC) → VTR]

■ Data format

[STX] [command] [:] [data] [ETX]
02h XX XX XX 3Ah XX-XX 03h ←(ASCII code: symbols, numbers upper-case letters)

20h<XX<7Fh

- [command]: Command identifier; a 3-byte identifier (ASCII code: symbols, numbers, upper-case letters) is sent as the command.
- [:]: This code serves as a delimiter between the command and data.
- [data]: Data (ASCII code: symbols, numbers, upper-case letters) can be added in the number of bytes required.

■ Outline of send procedure from controller

1. The send command starts with STX (start of text = 02h). The command is then identified by COMMAND which follows and the data is added as required.
   The format ends with ETX (end of text = 03h).
2. When a different command is to be sent, a response is awaited from the VTR, and then the command is sent. (See page 95.)
3. If STX is sent again before ETX is sent, the receive data buffer inside the VTR is cleared. A command error is returned to the controller, and the data is newly processed with STX which was received again at the head.

3) Return format [VTR → controller (PC)]

The following responses are made to the command. If necessary, more than one response is made.

■ **When the communication has terminated normally**

1. The receive completion message is returned.
   [ACK]
   06h

2. The execution completion message is returned.
   [STX] [command] [data] [ETX]
   02h XX XX XX XX-XX 03h

• [command]: This is the message (data) which is returned or the execution completion message identifier.
• [data]: This is the data to be returned. It can be omitted.

Example:	Send command		Return message (data)
	[STX] OPL [ETX]	→	[ACK] [STX] OPL [ETX]

■ **When the communication has terminated abnormally**

[NACK]
15h

■ **When processing is not possible due to incorrect data or trouble in the VTR**

1. The receive completion message is returned.
   [ACK]
   06h

2. An error code is returned.
   [STX] E R N_1 N_2 N_3 [ETX]
   02h Error code 03h

4. Error code table

ER001: Invalid command
- Unsupported command received.
- Error in command execution

ER002: Parameter error
ER102: VTR mode error (front loading motor)
ER103: VTR mode error (loading motor)
ER104: VTR mode error (drum, capstan system)
ER105: VTR mode error (reel system)
ER106: VTR mode error (tension system)
ER108: VTR dew error
ER1FF: VTR system error

5. Command table

(1) Commands relating to operation control

<Notes>

- As for the return (completion) message, [ACK] is first returned when data is received, and the execution message is subsequently returned. It is only the execution message which is listed in this table.
- In the case of commands not listed in the table, ER001 (invalid command) is returned after [ACK] has been returned.

VTR operation	Send command	Return (completion) message	Supplementary notes
STOP	[STX] OSP [ETX]	[STX] OSP [ETX]	This command is for stopping the tape travel. The resulting output picture and sound statuses differ according to the settings selected for the setup menu No. 105 (AUTO EE SEL).
EJECT	[STX] OEJ [ETX]	[STX] OEJ [ETX]	This command is for ejecting the cassette tape. The resulting output picture and sound statuses differ according to the settings selected for the setup menu No. 105 (AUTO EE SEL).
PLAY	[STX] OPL [ETX]	[STX] OPL [ETX]	This command is for starting playback.
REWIND	[STX] ORW [ETX]	[STX] ORW [ETX]	This command is for rewinding the tape. The resulting output picture and sound statuses differ according to the settings selected for the setup menu No. 105 (AUTO EE SEL). The maximum tape speed differs according to the setting selected for setup menu No. 102 (FF. REW MAX).
FAST FORWARD	[STX] OFF [ETX]	[STX] OFF [ETX]	This command is for fast forwarding the tape. The resulting output picture and sound statuses differ according to the settings selected for the setup menu No. 105 (AUTO EE SEL). The maximum tape speed differs according to the setting selected for setup menu No. 102 (FF. REW MAX).
REC	[STX] ORC [ETX]	[STX] ORC [ETX]	This command is for starting the recording.
SHTL FORWARD	[STX] OSF:data [ETX]	[STX] OSF [ETX]	This is the forward direction shuttle command.
	data = n: speed data 0: STILL 1: ×0.03 (DVCPRO), ×0.03 (DV, DVCAM) 2: ×0.1 (DVCPRO), ×0.1 (DV, DVCAM) 3: ×0.2 (DVCPRO), ×0.3 (DV, DVCAM) 4: ×0.5 (DVCPRO), ×0.5 (DV, DVCAM) 5: ×1 (DVCPRO), ×1 (DV, DVCAM) 6: ×1.85 (DVCPRO), ×1.85 (DV, DVCAM) 7: ×4.1 (DVCPRO), ×3.1 (DV, DVCAM) 8: ×9.5 (DVCPRO), ×9.5 (DV, DVCAM) 9: ×16 (DVCPRO), ×16 (DV, DVCAM) : This speed differs according to the setting selected for setup menu No. 101 (SHTL MAX). A: ×32 (DVCPRO), ×32 (DV, DVCAM) : This speed differs according to the setting selected for setup menu No. 101 (SHTL MAX).		

VTR operation	Send command	Return (completion) message	Supplementary notes
SHTL REVERSE	[STX] OSR:data [ETX]	[STX] OSR [ETX]	This is the reverse direction shuttle command.
	data = n: speed data 0: STILL 1: ×0.03 (DVCPRO), ×0.03 (DV, DVCAM) 2: ×0.1 (DVCPRO), ×0.1 (DV, DVCAM) 3: ×0.2 (DVCPRO), ×0.3 (DV, DVCAM) 4: ×0.43 (DVCPRO), ×0.5 (DV, DVCAM) 5: ×1 (DVCPRO), ×1 (DV, DVCAM) 6: ×1.85 (DVCPRO), ×1.85 (DV, DVCAM) 7: ×4.1 (DVCPRO), ×3.1 (DV, DVCAM) 8: ×9.5 (DVCPRO), ×9.5 (DV, DVCAM) 9: ×16 (DVCPRO), ×16 (DV, DVCAM) : This speed differs according to the setting selected for setup menu No. 101 (SHTL MAX). A: ×32 (DVCPRO), ×32 (DV, DVCAM) : This speed differs according to the setting selected for setup menu No. 101 (SHTL MAX).		
STANDBY OFF	[STX] OBF [ETX]	[STX] OBF [ETX]	This command is setting the VTR to standby OFF.
STANDBY ON	[STX] OBN [ETX]	[STX] OBN [ETX]	This command is setting the VTR to standby ON.

(2) Commands relating to inquiries

<Notes>

- As for the return (completion) message, [ACK] is first returned when data is received, and the execution message is subsequently returned. It is only the execution message which is listed in this table.
- In the case of commands not listed in the table, ER001 (invalid command) is returned after [ACK] has been returned.

VTR operation	Send command	Return (completion) message	Supplementary notes
CTL/TC DATA REQUEST	[STX] QCD [ETX]	[STX] CD data [ETX]	This command is for inquiring about the counter value.
		data = f w gh mm ss ff f = F w = S gh = CTL: g = SP (20h): for a plus display – (2Dh): for a minus display h = 0 – 9: hours TC: gh = 00 – 23: hours mm = 00 – 59: minutes ss = 00 – 59: seconds ff = 00 – 24: frames	CTL or TC is returned, whichever corresponds to the front display mode.
STATUS REQUEST	[STX] QOP [ETX]	[STX] xxx [ETX]	This command is for inquiring about the VTR's operation mode.
		xxx = OEJ: EJECT OFF: FAST FORWARD OPL: PLAY ORC: REC ORW: REWIND OSP: STOP (including the STANDBY ON) SRS: (IN/OUT) PREROLL OBF: STANDBY OFF OSF: SHTL FORWARD OSR: SHTL REVERSE OJG: JOG FORWARD/REVERSE OSW: VAR FORWARD/REVERSE EAE: AUTO EDIT EON: EDIT ON (MANUAL EDIT) EPV: PREVIEW ERV: REVIEW	
ID (VTR No.) REQUEST	[STX] QID [ETX]	[STX] data [ETX]	This command is for inquiring about the VTR used.
		data = AJ-D850E	

(3) Microsoft QuickBASIC sample programme

```
CLS
STX$ = CHR$(&H2): ETX$ = CHR$ (&H3): NAK$ = CHR$(15): ACK$ = CHR$(&H6)
PRINT "*** RS-232C COMMUNICATION SAMPLE PROGRAM ***"
PRINT "Type Command 'QUIT' to quit."
PRINT

REM *** Communication Port Initial & Open ***
REM Port 1,9600Bps,No parity,8 bit data,1 stop bit
OPEN "COM1:9600,N,8,1" FOR RANDOM AS #1 LEN = 256

REM *** Input Command & Send Command ***
SendCmd:
INPUT "Input Command ="; SEND$
IF SEND$ = "QUIT" THEN GOTO ProgEnd
PRINT #1, STX$ + SEND$ + ETX$

REM *** Wait for Receive Command ***
WHILE LOC(1) = 0
        WAITKEY$ = INKEY$
        IF WAITKEY$ = "Q" THEN PRINT "*** Quit ***": GOTO ProgEnd
WEND

REM *** Receive Command ***
RecvCmd:
RECV$ = INPUT$(1, #1)
IF RECV$ = STX$ THEN RECV$ = "[Stx]"
IF RECV$ = ACK$ THEN RECV$ = "[Ack]"
IF RECV$ = NAK$ THEN RECV$ = "[Nak]"
IF RECV$ = ETX$ THEN BUFFER$ = BUFFER$ + "[Etx]": GOTO DispOut
BUFFER$ = BUFFER$ + RECV$
GOTO RecvCmd

REM *** Output Receive Command ***
DispOut:
PRINT "Receive Command ="; BUFFER$
PRINT
BUFFER$ = ""
GOTO SendCmd

REM *** End Program ***
ProgEnd:
CLOSE
END
```

MICROSOFT QUICKBASIC is a registered trade mark of Microsoft Corporation.

Connector signals

VIDEO IN

SERIAL IN (DIGITAL)	BNC × 2	Active through (Option)
Y, P_B, P_R (ANALOGUE)	BNC × 3	
VIDEO IN	BNC × 2	Loop-through, 75Ω termination switch provided
REF VIDEO IN	BNC × 2	Loop-through, 75Ω termination switch provided

VIDEO OUT

SERIAL OUT (DIGITAL)	BNC × 3	(Option)
Y, P_B, P_R (ANALOGUE)	BNC × 3	
VIDEO OUT	BNC × 3	

AUDIO IN

SERIAL IN (DIGITAL)	BNC × 2	(Option)
AUDIO IN (DIGITAL)	XLR × 2	CH1/CH2, AES/EBU format
AUDIO IN (ANALOGUE)	XLR × 2	CH1, CH2
CUE IN	XLR × 1	
TIME CODE IN	XLR × 1	

Pin No.	Signal
1	GND
2	HOT
3	COLD

AUDIO OUT

SERIAL OUT (DIGITAL)	BNC × 3	(Option)
AUDIO OUT (DIGITAL)	XLR × 2	CH1/CH2, AES/EBU format
AUDIO OUT (ANALOGUE)	XLR × 2	CH1, CH2
CUE OUT	XLR × 1	
TIME CODE OUT	XLR × 1	
MONITOR OUT	XLR × 2	L (CH1)/R (CH2)
HEADPHONES (front)	M6	

RS-422A REMOTE (9P)

REMOTE IN/OUT

Pin No.	Signal	Pin No.	Signal	Pin No.	Signal
1	FRAME GROUND	4	RECEIVE COMMON	7	TRANSMIT B
2	TRANSMIT A	5	————	8	RECEIVE A
3	RECEIVE B	6	TRANSMIT COMMON	9	FRAME GROUND

REMOTE OUT

Pin No.	Signal	Pin No.	Signal	Pin No.	Signal
1	FRAME GROUND	4	TRANSMIT COMMON	7	RECEIVE B
2	RECEIVE A	5	————	8	TRANSMIT A
3	TRANSMIT B	6	RECEIVE COMMON	9	FRAME GROUND

PARALLEL REMOTE (25P)

Pin No.	Signal	Pin No.	Signal	Pin No.	Signal
1	PLAY COMMAND	10	————	19	STAND BY ON STATUS
2	STOP COMMAND	11	————	20	PREROLL STATUS
3	FF COMMAND	12	≥10V, MAX 300mA	21	SERVO LOCK STATUS
4	REW COMMAND	13	PLAY STATUS	22	OPERATION ENABLE STATUS
5	REC COMMAND	14	STOP STATUS	23	————
6	EJECT COMMAND	15	FF STATUS	24	————
7	STAND BY COMMAND	16	REW STATUS	25	GND
8	PREROLL COMMAND	17	REC STATUS		
9	IN SET COMMAND	18	EJECT STATUS		

<Notes>

• COMMAND pins: TTL level, active low, ≥100ms edge electrical signal.

• STATUS pins: open collector, sink current 6 mA

RS-232C REMOTE (25-pin D-SUB crossover cable supported)

Pin No.	Abbreviation	Circuit	Description
1	FRAME GROUND	Protective ground	Frame ground
2	RxD	Received data	Sends data to the PC.
3	TxD	Transmitted data	Receives data from the PC.
4	CTS	Clear to send	Shorted with pin 5.
5	RTS	Request to send	Shorted with pin 4.
6	DTR	Data terminal ready	No processing
7	GND	Signal ground	Signal ground
20	DSR	Data set ready	Positive power output after communication enable status

ENCODER REMOTE (15P)

Pin No.	Signal	Pin No.	Signal	Pin No.	Signal
1	————	6	SYSTEM H 0	11	RET GND
2	SET UP	7	SYS.SC COARSE (2)	12	————
3	C LEVEL	8	–12V	13	————
4	GND	9	HUE	14	SYS.SC FINE
5	+12V	10	VIDEO LEVEL	15	SYS.SC COARSE (1)

ENGLISH

Specifications

GENERAL

Power supply:	AC 220 – 240 V, 50 – 60 Hz
Power consumption:	210 W

Operating ambient temperature:	5°C to 40°C (41°F to 104°F)
Operating ambient humidity:	10% to 90% (no condensation)
Weight:	16.8 kg
Dimensions (W × H × D):	424 × 175 × 415 mm
Recording format:	DVCPRO format
Recording tracks:	Digital video Time code; Recorded in sub-code area Digital audio; 2 channels Cue signal; 1 track Control (CTL); 1 track
Tape speed:	33.854 mm/sec
Tape:	1/4-inch thin magnetic layer metal tape
Editing accuracy:	±0 frame (using time code)
Tape timer accuracy:	±1 frame (using continuous CTL signal)
Servo lock time:	Less than 0.5 sec. (colour framing/ standby ON)

VIDEO

(Digital video)

Sampling frequencies:	Y; 13.5 MHz/P_B, P_R; 3.375 MHz
Quantizing:	8 bits
Error correction:	Reed-Solomon product code

(Digital IN/analogue component OUT)

Video bandwidth:	Y; 25 Hz to 5.5 MHz (±0.5 dB) 5.75 MHz (–2 dB) P_B, P_R; 25 Hz to 1.3 MHz (±1 dB) 1.5 MHz (–5 dB) typ.
S/N ratio:	Better than 60 dB
K factor:	Less than 1%

(Analogue component IN/component OUT)

Video bandwidth:	Y; 25 Hz to 5.5 MHz (±1 dB) 5.75 MHz (–3 dB) P_B, P_R; 25 Hz to 1.3 MHz (±1 dB) 1.5 MHz (–6 dB) typ.
S/N ratio:	Better than 55 dB
K factor:	Less than 1%

(Analogue composite IN/composite OUT)

Video bandwidth:	Y; 25 Hz to 5.5 MHz (±1 dB) typ.
DG:	Less than 4%
DP:	Less than 3°
Y/C delay:	Better than 20 nsec
K factor:	Less than 2.5%

(Video input connector)

Analogue component input:	BNC×3 (Y, P_B, P_R) Y; 1.0 Vp-p, 75Ω P_B, P_R; 0.7 Vp-p, 75Ω (100% colour bar)
Analogue composite input:	BNC×2, loop-through, 75Ω on/off
Reference input:	Analogue composite BNC×2, loop-through, 75Ω on/off
Serial digital component input (option):	Complies with EBU Tech. 3267-E standard, BNC×2, active through

(Video output connector)

Analogue component output:	BNC×3 (Y, P_B, P_R) Y; 1.0 Vp-p, 75Ω P_B, P_R; 0.7 Vp-p, 75Ω (100% colour bar)
Analogue composite output:	BNC×3 Video1/video2/video3 (superimpose on/off)
Serial digital component output (option):	Complies with EBU Tech. 3267-E standard, BNC×3

(Video signals adjustment)

Composite video input signal:	±3 dB
Video output gain:	±3 dB
Video output chroma gain:	±3 dB
Video output chroma phase:	±30°
Video output black level:	±100 mV
Video output sync phase:	±15 µsec
Video output SC phase:	±180°
Video output Y/C delay:	±300 nsec

AUDIO

(Digital audio)

Sampling frequencies:	48 kHz
Quantizing:	16 bits
Frequency response:	20 Hz to 20 kHz ±1 dB
Dynamic range:	Better than 90 dB (1 kHz, emphasis OFF, "A" weighted)
Distortion:	Less than 0.05% (1 kHz, emphasis OFF, standard level)
Crosstalk:	Less than –80 dB (1 kHz, between 2 channels)
Wow & flutter:	Below measurable limit
Headroom:	18 dB
Emphasis:	T1=50 µsec/T2=15 µsec (on/off selectable)

(Cue track)

Frequency response:	300 Hz to 6 kHz ±3 dB

(Audio input connector)

Analogue input (CH1/CH2):	XLR×2, 600Ω/high impedance selectable, +4/0/–20 dBu
Digital input (CH1/CH2):	XLR×1, AES/EBU format
Serial digital input (option):	Complies with EBU Tech. 3267-E standard (BNC, 75Ω)
Cue track input:	XLR×1, 600Ω/high impedance selectable, +4/0/–20/–60 dBu

(Audio output connector)

Analogue output (CH1/CH2):	XLR×2, low impedance, +4/0/–20 dBu
Digital output (CH1/CH2):	XLR×1, AES/EBU format
Serial digital output (option):	Complies with EBU Tech. 3267-E standard (BNC, 75Ω)
Cue track output:	XLR×1, low impedance, +4/0/–20 dBu
Monitor output:	XLR×2, low impedance, +4/0/–20 dBu
Headphones:	Variable level, mini-jack, 8Ω

Other input/output connector

Time code input:	XLR×1, 0.5 to 8 Vp-p
Time code output:	XLR×1, 2.0 Vp-p
RS-422A input/output:	D-sub 9-pin, RS-422A interface
RS-422A output:	D-sub 9-pin, RS-422A interface
RS-232C:	D-sub 25-pin, RS-232C interface
Parallel input/output:	D-sub 25-pin
Encoder remote:	D-sub 15-pin

Weight and dimensions shown are approximately.
Specifications are subject to change without notice.

Panasonic Broadcast Europe
Panasonic Broadcast Europe Ltd.
West Forest Gate, Wellington Road, Wokingham, Berkshire RG40 2AQ U.K. Tel: 0118 902 9200

Panasonic Broadcast Europe GmbH
Hagenauer Str. 43, 65203 Wiesbaden-Biebrich Deutschland Tel: 49-611-1816-0

Printed in Japan
VQT7282

S1198H100 Ⓐ

Panasonic

DVCPRO

Digital Video Cassette Recorder

AJ-D850P

Operating Instructions

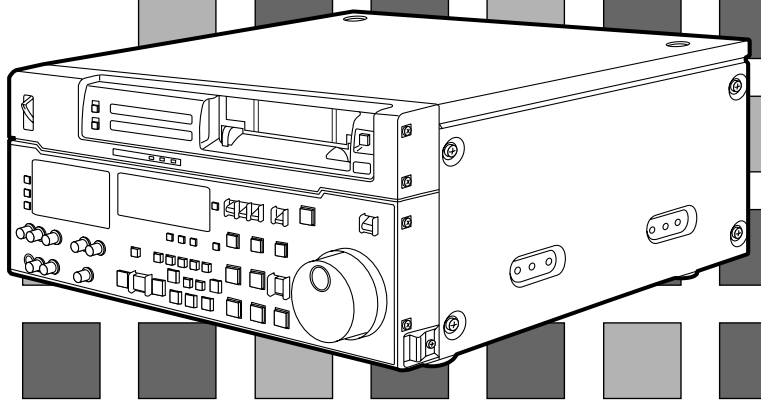

IMPORTANT

"Unauthorized recording of copyrighted television programs, video tapes and other materials may infringe the right of copyright owners and be contrary to copyright laws."

The lightning flash with arrowhead symbol, within an equilateral triangle, is intended to alert the user to the presence of uninsulated "dangerous voltage" within the product's enclosure that may be of sufficient magnitude to constitute a risk of electric shock to persons.

The exclamation point within an equilateral triangle is intended to alert the user to the presence of important operating and maintenance (servicing) instructions in the literature accompanying the appliance.

CAUTION:
To reduce the risk of fire or shock hazard and annoying interference, use the recommended accessories only.

WARNING:
To reduce the risk of fire or shock hazard, do not expose this equipment to rain or moisture.

CAUTION:
TO REDUCE THE RISK OF FIRE OR SHOCK HAZARD, REFER MOUNTING OF THE OPTIONAL INTERFACE BOARD TO AUTHORIZED SERVICE PERSONNEL.

FCC Note:
This device complies with Part 15 of the FCC Rules. To assure continued compliance follow the attached installation instructions and do not make any unauthorized modifications.

This equipment has been tested and found to comply with the limits for a Class A digital device, pursuant to Part 15 of the FCC Rules. These limits are designed to provide reasonable protection against harmful interference when the equipment is operated in a commercial environment. This equipment generates, uses, and can radiate radio frequency energy and, if not installed and used in accordance with the instruction manual, may cause harmful interference to radio communications. Operation of this equipment in a residential area is likely to cause harmful interference in which case the user will be required to correct the interference at his own expense.

☐ is the safety information.

- Do not insert fingers or any objects into the video casette holder.
- Avoid operating or leaving the unit near strong magnetic fields. Be especially careful of large audio speakers.
- Avoid operating or storing the unit in an excessively hot, cold, or damp environment as this may result in damage both to the recorder and to the tape.
- Do not spray any cleaner or wax directly on the unit.
- If the unit is not going to be used for a length of time, protect it from dirt and dust.
- Do not leave a cassette in the recorder when not in use.
- Do not block the ventilation slots of the unit.
- Use this unit horizontally and do not place anything on the top panel.
- Cassette tape can be used only for one-side, one direction recording. Two-way or two-track recordings cannot be made.
- Cassette tape can be used for either Color or Black & White recording.
- Do not attempt to disassemble the recorder. There are no user serviceable parts inside.
- If any liquid spills inside the recorder, have the recorder examined for possible damage.
- Refer any needed servicing to authorized service personnel.

Contents

General and Features 4
Controls and their functions 6
• Front panel 6
  • Front panel top section 7
  • Front panel center section 8
  • Front panel bottom section 14
• Connector area 16
Connections
• Connections when one unit is used 19
• Connections when 2 units are used 20
• Connections with editing controller 21
• Connections for adjusting video output
  o(encoder output) signals 22
Tapes 23
Switching on the power/inserting the cassette 24
STOP/STAND BY mode 25
Recording 26
Playback 27
Jog/shuttle 28
Manual editing 29
Preroll 30
Automatic editing 31
• Switch settings and adjustments 32
• Selecting the editing mode 33
• Entering the edit points 34
• Checking the edit points 35
• Modifying the edit points 36
• Preview 37
• Executing automatic editing 38
• Review 39
• Split editing 40
• Audio split editing 41
• Voice-over facility 43
• Audio cross-channel editing 46
V blanking data recording/playback 48
Video output (encoder output)
  signal adjustment 49
Setup (default settings) 50
Setup menus 51
• System menu 55
• Basic menu 57
• Operation menu 59
• Interface menu 62
• Edit menu 63
• Tape protect menu 67
• Time Code menu 67
• Video menu 69
• Audio menu 71
• V BLANK menu 74
• Menu menu 77
Time code/user bit 78
• Recording internal/external time codes 79
• Reproducing the time code/user bit 80
Superimpose screen 81
Servo reference 82
Audio V Fade Function 84
Printed circuit board 85
Rack mounting 86
Video head cleaning 87
Condensation 87
Error messages 88
Table of AUTO OFF Error messages 90
RS-232C interface 92
Connector signals 99
Specifications 101

Before operating this unit, check that all of its accessories are present and accounted for.

Power cord....1 pc

Option

• AJ-YA750P Component serial interface board
• AJ-CS750P Cassette adaptor
• AJ-MA75P Rack mounting adaptor
• AJ-YA752 Audio memory unit
• AJ-YAC850P SDTI/SDI board

This unit is a digital video cassette recorder which uses 1/4-inch tapes.
It incorporates digital compression technology so that the deterioration in picture quality and sound quality resulting from dubbing is significantly minimized compared with existing analog systems.
Furthermore, since it has a compact 4U size and light weight, the unit can be carried around or mounted in a 19-inch rack with ease.
The settings for the unit's setup can be performed interactively while viewing the screen menus on the TV monitor, and editing functions include both assemble and insert editing.

Features

Compact size and light weight

This is a 4U size digital VTR. It can be mounted in a 19-inch rack with ease using the optional rack-mounting adaptors (AJ-MA75P).

Up to 184 minutes of recording

Two sizes of cassette tapes can be used with this unit: M cassette (max. 66 minutes) and L cassette (max. 184 minutes). The width of the tapes measures 1/4 inch to achieve a compact design.

Compatibility with consumer products

Consumer cassette tapes shot with digital cameras available on the consumer market can be played back on this unit using the optional cassette adaptor (AJ-CS750P).
<Notes>
• Slow motion playback is not possible with consumer cassette tapes.
• Consumer cassette tapes recorded in LP mode cannot be played back.

Digital slow motion/dial jog

The slow-motion playback images can be reproduced clearly at any of the speeds given below using commands from the external controller or other such device: –0.43/–0.3/–0.2/–0.1/–0.03/0/+0.03/+0.1/+0.2/+0.3/+0.5/+0.75.
<Note>
Some noise may occur when the slow motion speed is changed.

Digital audio output in slow-motion/jog mode

This enables smooth playback of sound even in the slow-motion or jog mode, making it easier to use sound to search for edit points and determine their positions.

Dial shuttle

Shuttle operations enable the tape to be played back with color images at a speed of up to 60 times normal tape speed in either the forward or reverse direction.

Internal audio memory with 20-second capacity

Sound can now be recorded as pictures are played back without any time lag between the sound and picture (a process known as "voice-over"). Audio cross channel editing is enabled by using the unit in combination with an external sound mixer.

Audio memory unit (AJ-YA752) supported

Voice-over extending up to 34 minutes and 30 seconds (5 min. 46 sec. standard) is enabled by connecting the AJ-YA752 unit (optional accessory).

Features
(continued)

Recording and playing back V blanking data
In addition to closed caption and VITC, up to 28 lines of the character data per frame in the V blanking period can be recorded and played back.
<Note>
There is some limitation to the number of lines in which signals can be recorded.

Time codes
This unit comes with a built-in time code generator (TCG)/time code reader (TCR). In addition to the internal time code, an external code input or input signal VITC can be recorded in the machine as the LTC time code.

Multi-function input/output interfaces
- **Analog input/output**
  Component (Y, P_B, P_R) and composite signal input and output connectors are provided.
- **Serial digital input/output**
  Digital component interfacing complying with the EBU Tech. 3267-E serial digital signal standard is possible when the optional component serial interface board (AJ-YA750P) is used. Transfer using SDTI is enabled by the AJ-YAC850P SDTI/SDI board (option). (SMPTE 305M)
- **AES/EBU audio input/output**
  Digital audio input and output connectors are provided.
- **9-pin (RS-422A)/(RS-232C) remote**
  In addition to the standard 9-pin serial (RS-422A) connector, RS-232C and 25-pin parallel connectors are also featured.
  The RS-422A connector enables another VTR to be operated in parallel with the unit if a looping connection is used for the two units.

2-channel high-sound-quality digital audio
Sound can be edited separately for two channels while channel mixing capabilities are also available. One channel is provided for the analog cue track.

Automatic editing functions
Assembly and insert editing can be performed.

Menu-driven setup
The setup settings, which are conducted prior to operating the unit, are performed while viewing the setup menus either on the unit's display or a TV monitor.

Front panel

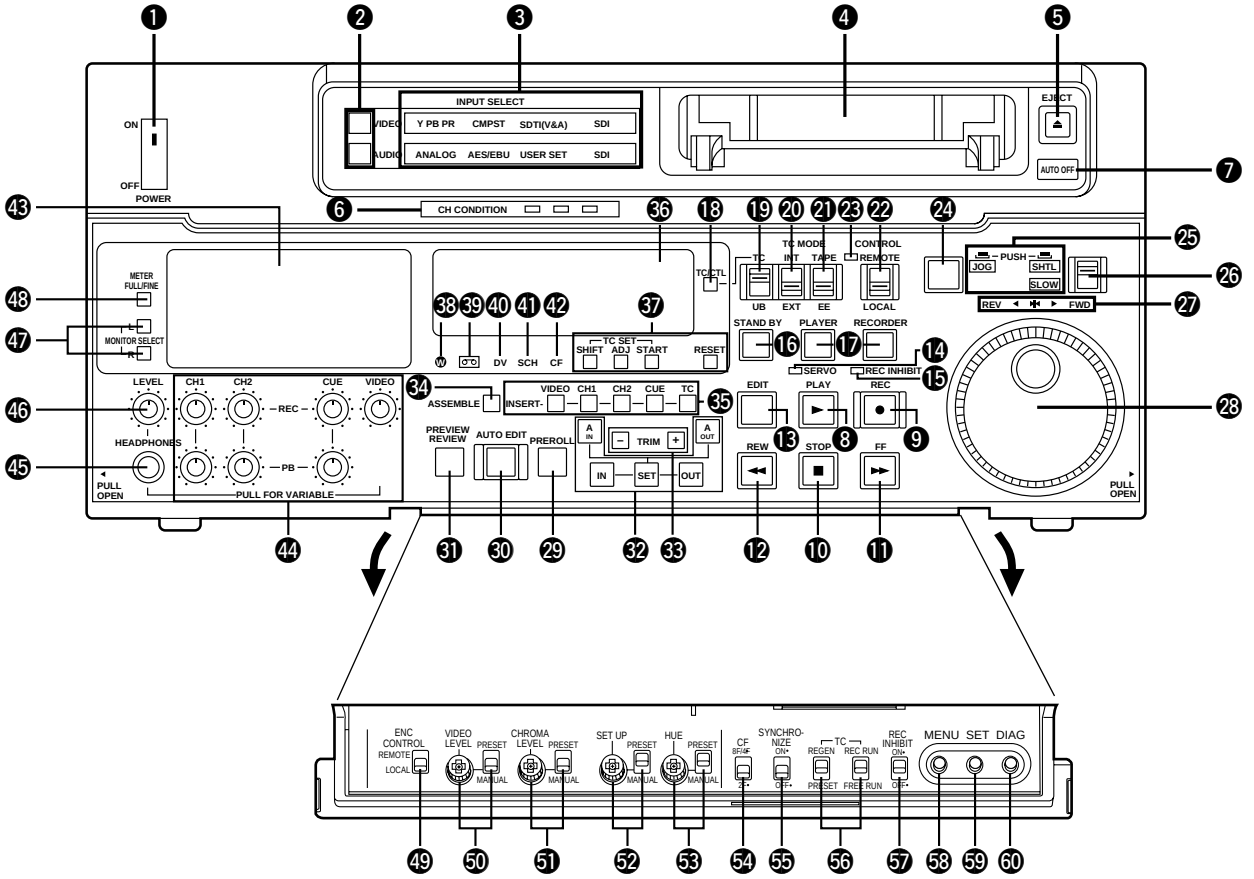

<Front Panel Top Section>

❶ POWER switch

When the ON side is pressed, the power is switched on, and the audio level and video level meters, counter display and INPUT SELECT display light up.

❷ INPUT SELECT switches

These are used to select the video and audio input signals.

<Video>

Each time the VIDEO button is pressed, the input video signal selection is switched in the order of Y P_B P_R, COMPOSITE, SDTI (V&A), SDI and back to Y P_B P_R. If SDTI (V&A) is selected, both the video and audio signals will be input from SDTI.

<Audio>

Each time the AUDIO button is pressed, the input audio signal selection is switched in the order of ANALOG, AES/EBU, USER SET, SDI and back to ANALOG.

USER SET is a function for selecting two different input signals to be recorded on PCM audio signal CH1 and CH2, and it is used in tandem with the setup menu.

For instance, if USER SET is selected by INPUT SELECT and CH1=ANALOG, and CH2=DIGI are selected on the setup menu No. 710 (CH1 IN SEL), No. 711 (CH2 IN SEL) and No. 712 (DIGI IN SEL), the analog input signal and AES/EBU digital signal will be respectively recorded on channels 1 and 2 of the PCM audio signals recorded on the tape. However, when SDTI has been selected for the video input, SDTI input will be forcibly established for the audio input as well.

<Front Panel Top Section>

❸ INPUT SELECT display

The characters corresponding to the selected input signal light. When, with the exception of analog signals, the selected input signals are not available, the display flashes to alert the user.

<Video>

Y PB PR: Analog component video signal
CMPST: Analog composite video signal
SDTI (V&A): Compressed data, serial and digital video and audio signals (option)
SDI: Serial digital video signal (EBU Tech. 3267-E) (option)

When BB has been selected as the setup menu No. 601 (INT BB SIG) setting, the entire display area will light up.

<Audio>

ANALOG: Analog audio signal
AES/EBU: Digital audio signal
USER SET: Selection of audio signal to be recorded
SDI: Serial digital audio signal (EBU Tech. 3267-E) (option)

When ON has been selected as the setup menu No. 722 (INT SG) setting, the entire display area will light up.

❹ Cassette insertion slot

The M cassette, L cassette and consumer cassette (S cassette) with adaptor are inserted into this slot.

Consumer cassettes can be played back only.

❺ EJECT button

When this is pressed, the tape is unloaded and several seconds later the cassette is automatically ejected. When the counter display indicates “CTL”, the display is reset.

The lamp lights when the eject command is received.

❻ Channel condition lamps

One of these lamps lights in accordance with the error rate status. (Green→amber→red)

Green: This lights when the error rates for the video and audio playback signals are both acceptable.
Amber: This lights when the error rate for the video or audio playback signals has deteriorated.
Red: The playback picture will remain normal even when this lamp lights.
This lights when the video or audio signals are subject to rectification or interpolation.

❼ AUTO OFF lamp

This lights when trouble has arisen in the deck’s operation.

<Front Panel Center Section>

❽ PLAY button

Playback commences when this button is pressed.

Recording commences when the button is pressed together with the REC button; manual editing commences when it is pressed together with the EDIT button during playback.

Pressing only the PLAY button during manual editing will cut out the editing and establish the playback mode.

❾ REC button

Recording commences when this button is pressed together with the PLAY button.

When it is pressed during playback, search, fast forward or rewind, EE mode images and audio signals can be monitored for as long as it is kept depressed.

When it is pressed in the stop mode, EE mode images and sound can be monitored. When the STOP button is pressed, the original picture and sound are restored.

❿ STOP button

When this is pressed, the tape stops traveling, and if the TAPE/EE selector switch is at TAPE, still pictures can be monitored.

The drum continues to rotate even in the stop mode, and the tape remains in close contact with the drum.

If the stop mode continues for more than a certain period of time, the unit automatically switches to the standby OFF mode in order to protect the tape.

The stop mode is established immediately after a cassette has been inserted into the unit.

⓫ FF button*

The tape is fast forwarded when this is pressed.

⓬ REW button*

The tape is rewound when this is pressed.

⓭ EDIT button

For manual editing, press both this button and the PLAY button together during playback.

When the button is pressed in the stop mode, the input mode signals selected by the ASSEMBLE or INSERT button can be monitored in the EE mode.

The original picture and sound are restored when the STOP button is pressed.

When the button is pressed during playback, search, fast forward or rewind, the input signals of the mode selected by the ASSEMBLE or INSERT button can be monitored in the EE mode for as long as the button is held down.

⓮ SERVO lamp

This lights when the drum servo and capstan servo have locked.

⓯ REC INHIBIT lamp

This lights when the REC INHIBIT switch in the front panel bottom section is at ON or when the accidental erasure prevention mode has been set for the cassette.

In this state, neither recording nor editing is possible.

* The FF/REW speed can be selected on the setup menu No. 102 (FF. REW MAX), and it is set to the same speed.

<Front Panel Center Section>

⑯ STAND BY button

When this is pressed, the same tension as in the regular stop mode is applied to the tape, and while the head drum continues to rotate, the button's lamp lights to indicate that the standby ON mode is established.

In the standby OFF mode, the half-loading mode is established.

When this button is pressed in the stop mode, the standby OFF mode is established, the half-loading mode is established. The lamp in the button now goes off. When the unit remains in the stop mode for longer than a predetermined period, the standby OFF mode is automatically established in order to protect the tape.

When this button or the STOP button is pressed in the standby OFF mode, the standby ON mode is established.

When a button other than the STOP button is pressed, the mode corresponding to the button pressed is established.

On-screen settings are available for the transfer time to the standby OFF mode.

⑰ PLAYER/RECORDER buttons

These buttons are operated when editing operations are conducted using the unit as the recorder and a VTR equipped with an RS-422A serial interface remote control connector (9 pins). Neither button functions when the unit is used on its own.

PLAYER button: When this button is pressed, its lamp lights, and the player connected to the unit can be operated by remote control. The unit's editing and tape transport buttons now control the player's functions.

RECORDER button: When this button is pressed, its lamp lights, and the editing and tape transport buttons control the recorder's (= the unit's) functions.

⑱ TC/CTL switch

By pressing this switch, what appears on the counter display is changed between TC and CTL.

When TC is selected, either the TC or UB value is displayed depending on the position selected by the TC/UB switch.

⑲ TC/UB switch

This selector switch determines whether the value of TC or UB appears on the counter display when the TC/CTL switch has been set to TC.

⑳ INT/EXT switch

INT: For using the built-in time code generator.

EXT: For using the time external code which is input from the time code input connector or the video signal VITC. The selection is set at the setup menu No. 505 (EXT TC SEL).

㉑ TAPE/EE switch

<In the stop mode>

TAPE: For outputting the signals played back from the tape.

EE: For outputting the input signals selected by the INPUT SELECT switch.
Select NORMAL or THRU as the setup menu No. 116 (EE MODE SEL) setting. In either case, use the switch for monitoring purposes.

<In the editing*/recording mode>

TAPE: For outputting the simultaneous playback signals.

EE: For outputting the input signals selected by the INPUT SELECT switch.

* The SETUP menu No. 308 (CONFI EDIT) setting is required.

<Front Panel Center Section>

㉒ REMOTE/LOCAL switch

This switch is set when the unit is to be controlled from an external source using the REMOTE connector, RS-232C connector or parallel connector.

REMOTE: Set to this position when controlling the unit by a device connected using the 9-pin REMOTE connector or RS-232C/parallel connector.

LOCAL: Set to this position when controlling the unit using the controls on its own operation panel.

㉓ REMOTE lamp

This lights when the REMOTE/LOCAL switch has been set to the REMOTE position.

㉔ Search button

This button is pressed to establish the search mode.

When the search dial is set to the shuttle mode and turned to a particular position, and this button is pressed, playback commences at the speed set by the search dial.

㉕ JOG/SHTL/SLOW lamps

These indicate the present status of the search dial and SHTL/SLOW switch.

JOG: This lights when the unit is in the JOG mode.

SHTL: This lights when the unit is in the SHTL mode.

SLOW: This lights when the unit is in the VAR (variable) mode.

㉖ SHTL/SLOW switch

This selector switch is set when the search dial is used for SHTL or SLOW applications.

㉗ REV/STILL/FWD lamps

One of these lamps lights depending on the operation of the search dial.

REV: This lights when the dial is turned counterclockwise and the tape travels in the REV direction provided that the lamp in the search button has lighted.

STILL: This lights in the JOG mode while the dial is kept stationary, and the tape stops traveling provided that the lamp in the search button has lighted.
It lights in the SHTL mode provided that the dial is at the STILL position.

FWD: This lights when the dial is turned clockwise, and the tape travels in the FWD direction provided that the lamp in the search button has lighted.

㉘ Search dial

This is used to search for the edit points.

Each time it is pressed, the mode is alternately set to shuttle or jog, and one of the JOG, SHTL and SLOW lamps lights. When the power has been turned on, the dial will not function until it has first returned to the STILL position.

Shuttle mode: When the dial is turned and stopped at a particular position while the SHTL/SLOW switch is at SHTL, the tape can be played back at the speed corresponding to the dial's rotary angle position. A still picture appears at the dial's center position.
When the dial is turned all the way counterclockwise with the SHTL/SLOW switch at SLOW, the tape speed is set to –4× normal speed, when it is set to the center position, a still picture is produced, and when it is turned all the way clockwise, the tape speed is set to +4× normal speed. The maximum speed for SLOW can be set using setup menus No. 317 (VAR FWD MAX) and No. 318 (VAR REV MAX).

Jog mode: The dial clickstops are cleared, and the tape is played back at the speed corresponding to the speed at which the dial is turned. The maximum speed can be selected using the setup menu No. 320 (JOG FWD MAX) and No. 321 (JOG REV MAX) settings.

<Front Panel Center Section>

㉙ PREROLL button

This is used for feeding and cueing the tape for manual editing.
When it is pressed, the tape travels to the preroll point where it stops.
The preroll time can be set on the setup menu No. 000 (P-ROLL TIME).
When this button is pressed while the IN or OUT button is held down, the tape can be cued to the IN or OUT point entered.
When the AUTO ENTRY on the setup menu No. 311 is set to “ENA”, IN point has been entered at the point where the PREROLL button is pressed even if the IN point has not been entered.

㉚ AUTO EDIT button

Automatic editing is executed when this is pressed after an edit point has been entered.
When the AUTO EDIT button is pressed though the IN point has not been entered, automatic editing is executed using the point at which the button was pressed as the IN point.

㉛ PREVIEW/REVIEW buttons

PREVIEW: When this is pressed after an edit point has been entered, the tape travels, editing is not performed, and the rehearsal can be activated on the screen connected to the recorder.
If it is pressed when the IN point has not been entered, the point at which the button was pressed is entered as the IN point, and preview is executed accordingly.

REVIEW: If this is pressed after a block has been edited, the now edited block can be played back and monitored on the screen connected to the recorder.

㉜ IN (A IN)/SET/OUT (A OUT) buttons

When the SET button is pressed while the IN (A IN) or OUT (A OUT) button is held down, the IN or OUT point is entered.
The A IN and A OUT buttons are used to enter audio IN and OUT points which are different from the corresponding video points for audio split editing.
While an IN or OUT point is being entered, the lamp in the IN or OUT button corresponding to the point being entered lights.
When this button is pressed after a point has been entered, the IN or OUT point value appears on the counter display. When the IN or OUT button is pressed together with the RESET button, the IN or OUT point entry is cleared.

㉝ TRIM buttons

These buttons are used to trim IN or OUT point finely.
When the “+” or “–” button is pressed while the IN or OUT button is held down, the entered edit point can be trimmed in 1-frame increments. When the “+” button is pressed, the tape is advanced by one frame; when the “–” button is pressed, it is rewound by one frame.

㉞ ASSEMBLE button

This is pressed for assemble editing.
The button is self-illuminating, and it is set ON (lamp lights) when it is pressed once and OFF (lamp goes off) when it is pressed again.

㉟ INSERT buttons

Press one of these five buttons to select the input signals to be edited during insert editing.
The buttons are self-illuminating, and they are set ON (lamp lights) when they are pressed once and OFF (lamp goes off) when they are pressed again.

㊱ Counter display

This displays the TC and CTL count values, on-screen information and other messages.

<Front Panel Center Section>

㊲ Time code buttons

These are used to set the TC or UB value.

SHIFT: When setting the TC or UB value, first press this button to stop the data running. Change the digit now flashing on the display.
Each time the button is pressed, the flashing moves to the right by one digit, and when it reaches the right-most digit, it returns to the left-most digit.
When it is kept depressed, the flashing moves consecutively.

ADJ: This is used to change the numeral of the digit now flashing on the display.
When the button is pressed once, the number is incremented by 1, and when it is kept depressed, the number is incremented consecutively.

START: This enters the data which has been changed by the SHIFT and ADJ buttons.
Also, Pressing this button when the TC or UB value are not set enables the TCG or UBG setting values to be confirmed.

RESET: When this button is pressed in the CTL mode, the display is reset to “00:00:00:00”.
In the CTL mode, the entered edit points are cleared.
In the TC/UB mode, the generator is reset when the button is pressed together with the SHIFT button.

㊳ Warning lamp

This lights to warn the operator of a particular item.

㊴ Cassette insertion display lamp

This lights when a cassette has been inserted into the unit.

㊵ Consumer cassette insertion display lamp

This lights when a cassette recorded on a consumer DV device has been inserted.

㊶ SCH lamp

This lights when the SCH of the external sync signal is within a specific range.

㊷ CF lamp

This lights when the color framing is locked.

㊸ Level meters

These indicate the PCM audio signal CH1/CH2, CUE track signal and video signal levels.
The audio signal indicates the output signal levels.
The video signal indicates the input signal levels.

㊹ Input/output level controls*

These are used to adjust the recording and playback levels of the PCM audio signal CH1/CH2 and CUE track signals and the recording level of the composite video signals.
Each control located on the upper level is for adjusting the recording level, and each control located on the lower level is for adjusting the playback level.
These are “pull for variable” controls which means that they enable adjustment only when they have been pulled up. The signals levels are set to the unity value (preset value) when the controls have been pushed down.

㊺ Headphones jack

The sound being recorded, played back or edited can be monitored on stereo headphones when they are connected to this jack.

* The input levels are always fixed (at –18 dB) when “ON” has been selected as the setup menu No. 722 (INT SG) setting

<Front Panel Center Section>

㊻ Volume control

This is used to adjust the headphones volume and the monitor output volume.

Whether the headphones output and monitor output volumes are to be linked or kept separate can be set on the setup menu No. 708 (MONI OUT). (Note that the headphones output volume is normally linked.)

When the volumes are kept separate, the monitor output is set to the unity value (preset value).

㊼ MONITOR SELECT switches

These are used to select the audio signals output to the monitor L/R channels.

Each time the “L” button is pressed, the signals output to the monitor L channel are selected in turn in the following order: CH1, CH2, CUE and back to CH1.

Each time the “R” button is pressed, the signals output to the monitor R channel are selected in turn in the following order: CH1, CH2, CUE and back to CH1.

The L or R lamp on the level meter display lights to indicate which signal is now being selected. (When the unit is set to “AUTO 1” or “AUTO 2” in No. 713 (MONI CH SEL) on the setup menu, then the display will change according to the monitor output.)

㊽ METER (FULL/FINE) selector switch

This switch is used to select the scale unit display mode for the audio level meters.

FULL mode: Standard scale units (ranging from –∞ to 0 dB) are used.

FINE mode: The scale is divided up into 0.5 dB increments.

<Front Panel Bottom Section>

㊾ ENCODER CONTROL switch

This selects whether the adjustments to the video output signals are to be performed by the unit or by an external encoder/remote controller.

REMOTE: The adjustments to the video output signals are performed by the external encoder/remote controller.

LOCAL: The adjustments to the video output signals are performed by the unit.

㊿ VIDEO LEVEL control and switch

When the ENCODER CONTROL switch is at LOCAL, the video level can be adjusted.
When it is at PRESET, the video level is set to the unity value (0 dB).
When it is at MANUAL, the video level can be adjusted using this control.

51 CHROMA LEVEL control and switch

When the ENCODER CONTROL switch is at LOCAL, the chroma level can be adjusted. When it is at PRESET, the chroma level is set to the unity value (0 dB). When it is at MANUAL, the chroma level can be adjusted using this control.

52 SET UP control and switch (Composite output only variable.)

When the ENCODER CONTROL switch is at LOCAL, the setup level can be adjusted. When it is at PRESET, the setup level is set to the unity value (0 IRE). When it is at MANUAL, the setup level can be adjusted using this control.

53 HUE control and switch (Composite output only variable.)

When the ENCODER CONTROL switch is at LOCAL, the hue can be adjusted. When it is at PRESET, the hue is set to the unity value (0°). When it is at MANUAL, the hue can be adjusted using this control.

54 CF switch

This selects whether the playback framing is to be locked in 8/4-field increments or 2-field increments.

8F/4F: The framing is locked in 8/4-field increments.

2F: The framing is locked in 2-field increments.

Switching to 8F or 4F is enabled by the SETUP menu No. 107 (CAP.LOCK) setting.

55 SYNCHRONIZE switch

This selects whether to provide phase synchronization between two decks.

ON: Phase synchronization is provided. Error-less editing can be performed.

OFF: Phase synchronization is not provided. The edit point will be off by several frames, but editing can be performed quickly.

56 TC generator switch

REGEN: When the REGEN/PRESET switch is at REGEN, the internal time code generator is synchronized with the time code which the time code reader read from the tape. Whether to set TC or UB to REGEN can be selected at the setup menu No. 503 (TCG REGEN).

PRESET: When the REGEN/PRESET switch is at PRESET, presetting is enabled by the controls on the operation panel or by remote control.

REC RUN: The time code runs only during recording when the RUN MODE switch has been set to REC. The time code runs constantly when the REGEN/PRESET switch is set to REGEN.

FREE RUN: The time code runs regardless of the operation mode as long as the power is being supplied when the RUN MODE switch has been set to FREE.

<Front Panel Bottom Section>

⑰ REC INHIBIT switch

This selects whether to enable or inhibit the recording on the cassette tape.

ON: The recording on the cassette tape is inhibited.
The REC INHIBIT lamp on the front panel now lights.

OFF: The recording on the cassette tape is enabled provided that the cassette's accidental erasure prevention mechanism has been set to the recording enable position.

⑱ MENU button

When this is pressed, the setup menu appears on the TV monitor using VIDEO OUT 3 connector, and the setup menu No. appears on the display.
When it is pressed again, the setup menu setting mode is exited and the original operating mode is restored.

⑲ SET button

When this is pressed, the data which has been set on the setup menu is entered. After data entry, the setup menu setting mode is exited and the original operating mode is restored.

⑳ DIAG button

When this is pressed, VTR information is displayed. When it is pressed again, the original display is restored.
There are two types of VTR information: "HOURS METER" information and "WARNING" information. Switching between these types is enabled by pressing the search button.
Indicated on the "HOURS METER" screen are the power-on time, drum rotation time, tape travel time, loading count, etc.
Indicated on the "WARNING" screen are the warnings.

Connector area

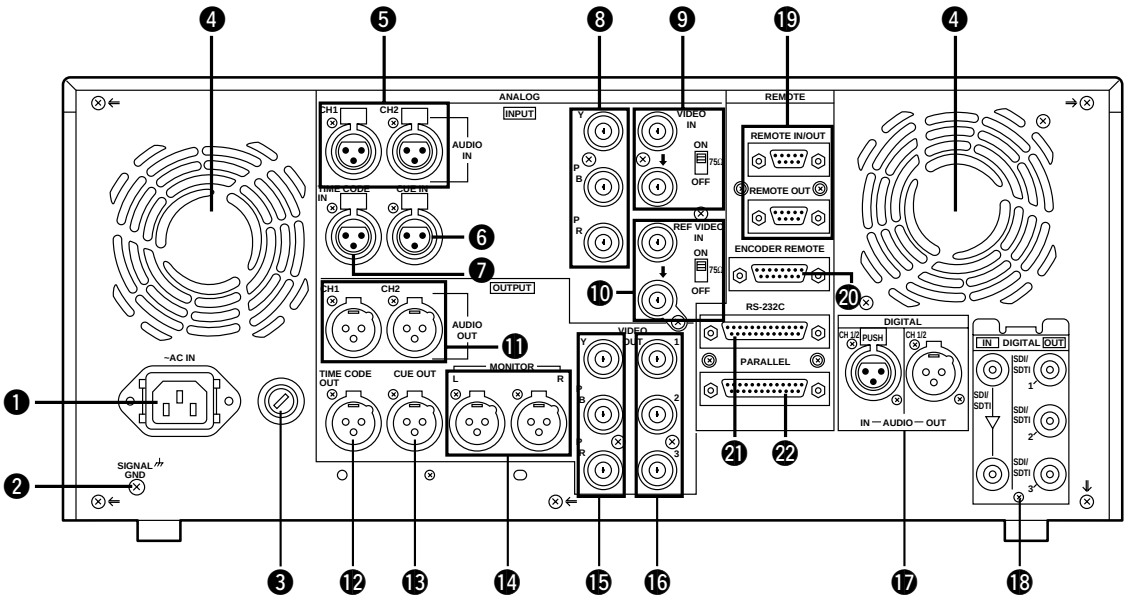

<Connector area>

❶ AC IN connector
This is for connecting the unit to the power outlet using the power cord provided.

❷ SIGNAL GND terminal
This terminal is connected to the signa unit which is connected to the unit in order to reduce noise. It is not connected to ground for safety purposes.

❸ Fuse holder
This contains a fuse.

❹ Fan motor
This is for cooling the unit.
The Ⓦ lamp lights when trouble has caused the fan motor to stop. If the unit is still operated in the warning status, the temperature inside the deck will rise, and when it exceeds the safety temperature, all the unit's operations will be shut down.

❺ ANALOG AUDIO IN connectors
These are the analog audio input connectors.

❻ CUE IN connector
The analog signal to be recorded on the CUE track is supplied to this connector. The audio signals from a microphone can also be recorded by selecting the –60 dB input mode on the setup menu No. 702 (CUE IN LV).

❼ TIME CODE IN connector
This is the connector for recording the external time code on the tape.

❽ ANALOG COMPONENT VIDEO IN connector
The analog component video signal is supplied to this connector.

❾ ANALOG COMPOSITE VIDEO IN connectors and 75Ω termination switch
The analog composite video signal is supplied to these two connectors which are connected in a loop-through configuration. When the termination is required, set the switch to ON.

❿ REF VIDEO IN connectors and 75Ω termination switch
These are the input connectors for the reference video signals. When the termination is required, set the switch to ON.

⓫ ANALOG AUDIO OUT connectors
The analog audio signals are output from these connectors.

⓬ TIME CODE OUT connector
The playback time code is output from this connector during playback.
During recording, the time code generated by the internal time code generator is output.

⓭ CUE OUT connector
The analog signal recorded on the CUE track is output from this connector.

⓮ MONITOR OUT connector
During playback, the playback signals from the CUE track or PCM audio signal CH1/CH2 are output from this connector.

<Connector area>

⓯ ANALOG COMPONENT VIDEO OUT connector

The analog component video signal is output from this connector.

⓰ ANALOG COMPOSITE VIDEO OUT connectors

The analog composite video signals are output from these connectors.

The video signal with signals superimposed on it can be output from the VIDEO OUT3 connector.

The superimpose function can be set ON or OFF on the setup menu No. 006 (SUPER).

⓱ DIGITAL AUDIO IN/OUT connector

This I/O connector is for digital audio signals which comply with the AES/EBU standard.

⓲ SERIAL DIGITAL COMPONENT AUDIO/VIDEO IN/OUT connector (optional AJ-YA750P interface board required)

This I/O connector is for digital component audio and video signals which comply with the EBU Tech. 3267-E standard.

The connectors are known by different names when the AJ-YAC850P SDTI/SDI board (option) is used. For further details, refer to the operating instructions of the AJ-YAC850P board.

⓳ Remote control connectors

The unit can be controlled from an external source by connecting the unit with another unit or an external controller.

There are two remote control connectors, one for IN/OUT uses and the other for OUT uses.

IN/OUT: For connection with an external controller.
For connection with deck-to-deck operation.

OUT: For connection with parallel running operations.

⓴ ENCODER REMOTE connector

The external encoder/controller is hooked up to this connector when the video output signal and other settings are to be adjusted from an external source.

㉑ RS-232C connector

㉒ PARALLEL REMOTE connector

This is used when operating the unit from an external source.

Connections when one unit is used

Set the CONTROL switch on the front panel to LOCAL.

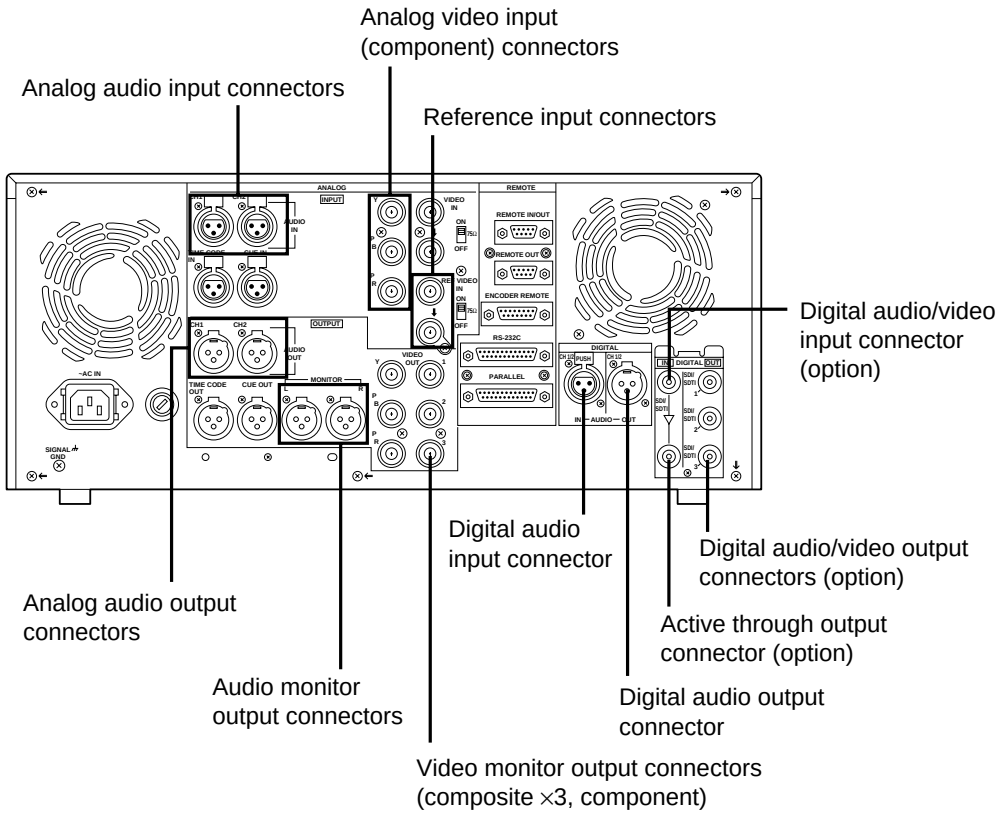

Connections when 2 units are used (deck to deck)

Source machine: • Set the CONTROL switch on the front panel to REMOTE.

Recorder: • Set the CONTROL switch on the front panel to LOCAL.

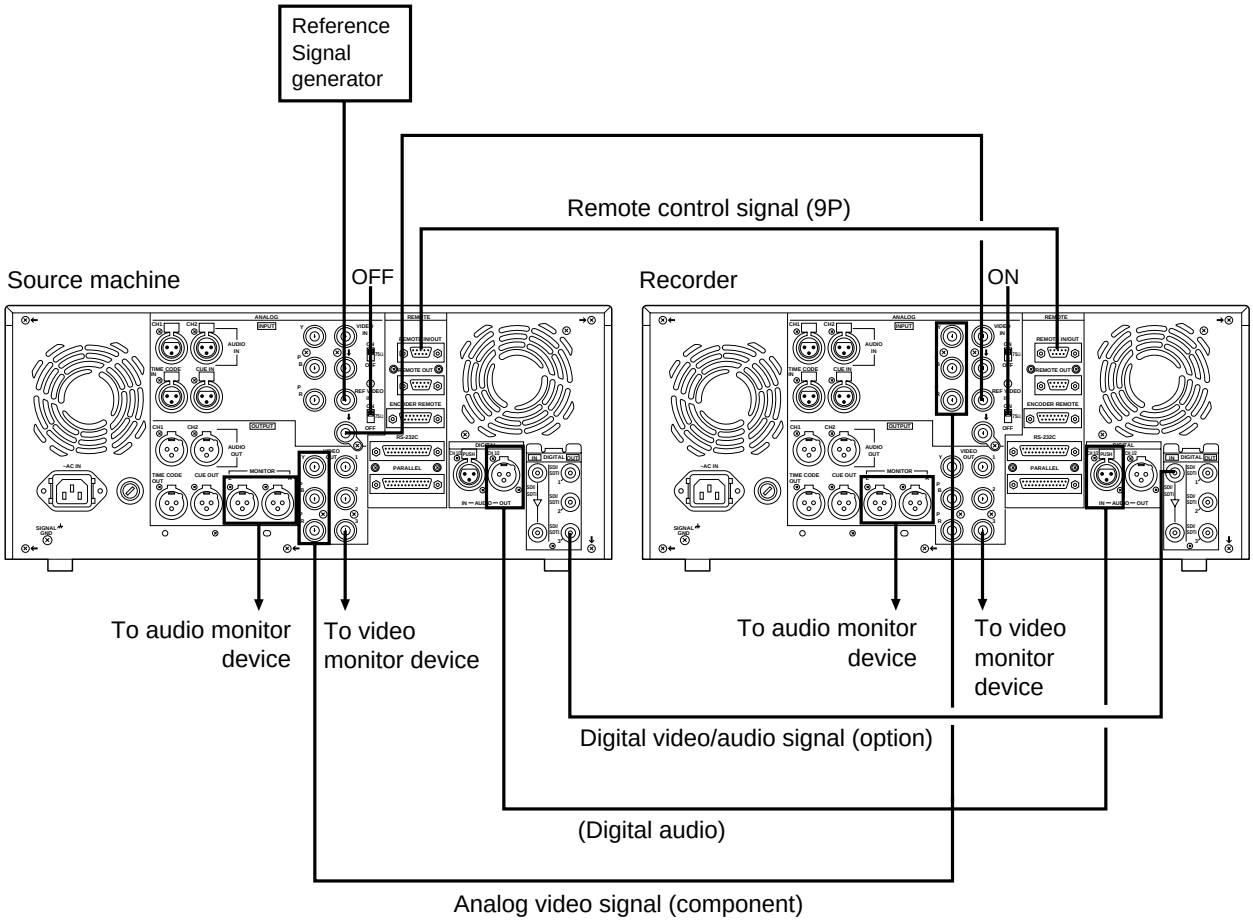

Connections with editing controller

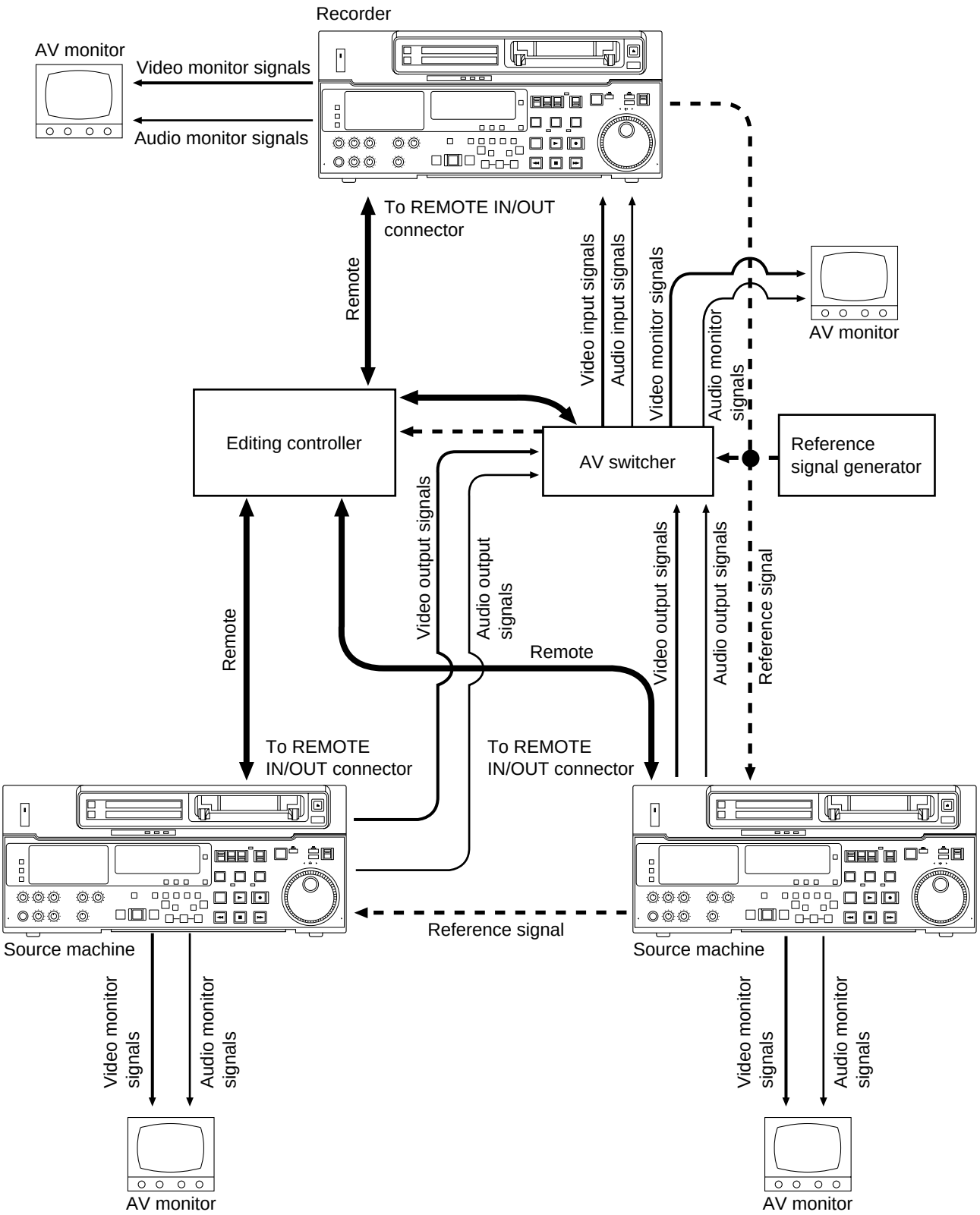

<Note>
When an editing controller made by CMX is used, support must be provided at the editing controller side.

Connections for adjusting video output (encoder output) signals

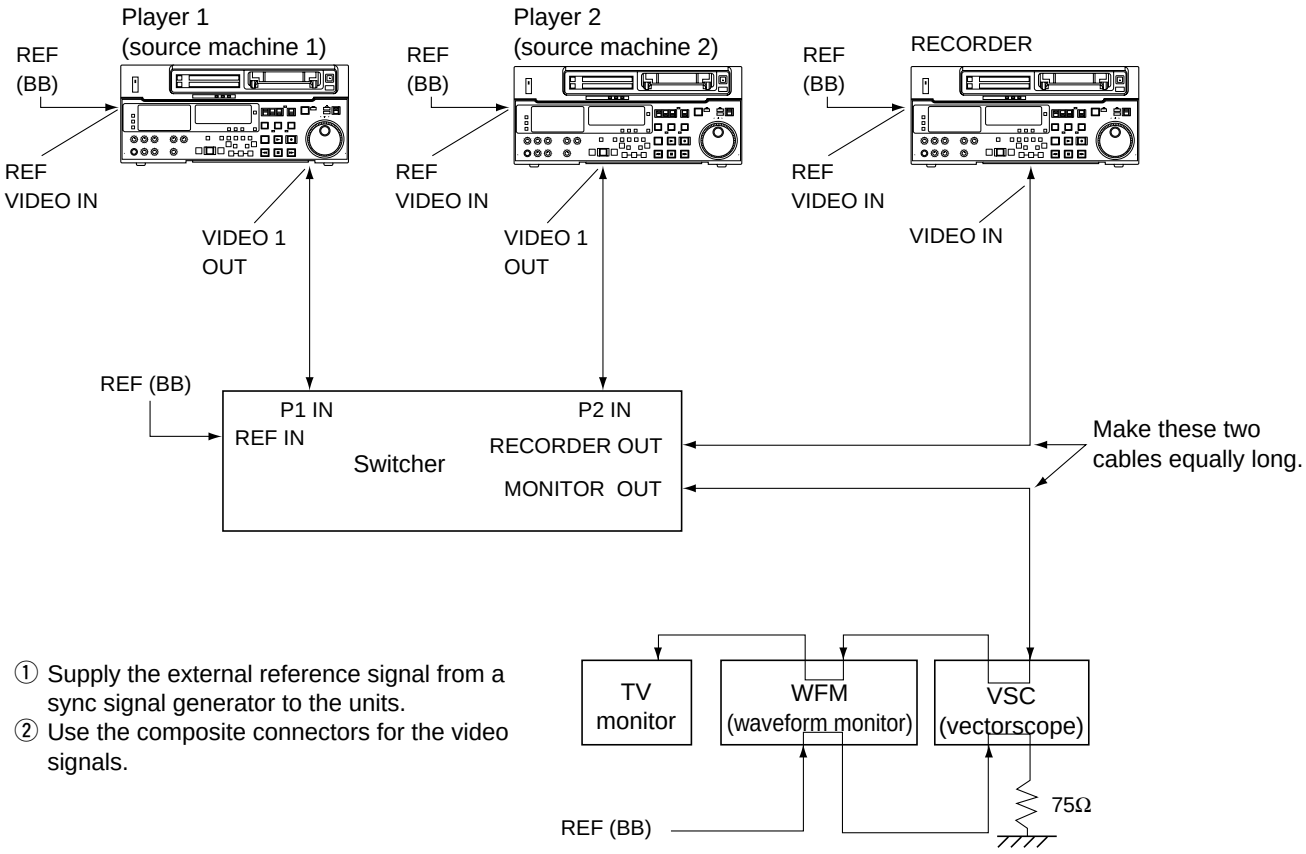

① Supply the external reference signal from a sync signal generator to the units.
② Use the composite connectors for the video signals.

Type	Description
Consumer cassette (S cassette)	Tape designed exclusively for the camcorders used by consumers in general. Only playback is possible using the optional cassette adaptor. However, please note that long-play cassette tapes (80-minute standard/ 120-minute LP mode) cannot be used. **Use of Panasonic consumer DV cassette tapes is recommended.** Note that inserting a cassette tape without using the cassette adaptor can damage the unit.
M cassette	Recording/playback tape with a maximum capacity of 66 minutes. (AJ-P12MP, AJ-P24MP, AJ-P33MP, AJ-P46MP, AJ-P66MP)
L cassette	Recording/playback tape with a maximum capacity of 184 minutes. (AJ-P34LP, AJ-P66LP, AJ-P94LP, AJ-P126LP, AJ-5P92LP)

Align the cassette with the center of the insertion slot and push it in gently. The cassette tape is loaded automatically.

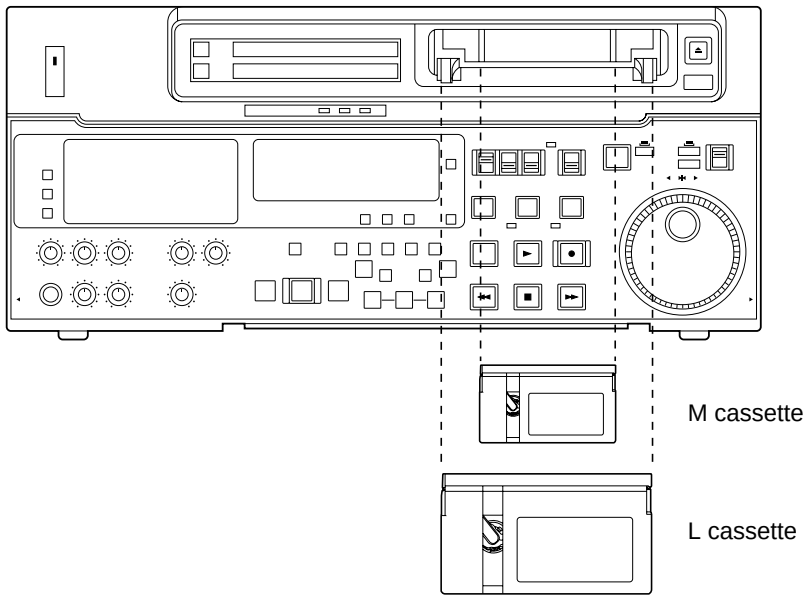

<Note>
For AJ-5P92LP cassette tapes recorded using the DVCPRO (25 Mbps) mode, use a VTR supporting DVCPRO (25 Mbps) 184 minute tapes.

<Cautions when playing back consumer DV tapes and DVCAM tapes>
- Consumer DV tapes and DVCAM tapes can be used for playback only.
- Consumer DV tapes which have been recorded in the LP mode cannot be played back.
- When materials which have been recorded on consumer DV tapes or DVCAM tapes are to be edited, record them onto a DVCPRO tape or tape of any other broadcasting VTR for use.
- Recordings cannot be made on consumer DV tapes and DVCAM tapes: this means that all functions related to recording, REC operation, editing selection and execution, TAPE/EE switching and other such operations are prohibited.
- The maximum transport speed for consumer DV tapes and DVCAM tapes is 32 times the normal tape speed.
- The maximum time for the STILL TIMER when consumer DV tapes or DVCAM tapes are used is set to 10 seconds, and the total STEP FWD time when the machine has been left standing in the STILL status is set to 1 minute.
- Slow-motion playback of consumer DV tapes and DVCAM tapes is not possible.
- In order to protect your tapes, it is recommended that repeated cue-up in the same location on a consumer DV tape or DVCAM tape be avoided as far as possible.
- Finally, check out the cautionary items for setup menu item No. 108 “FORMAT SEL”.

Switching on the power/inserting the cassette

Before starting to operate the unit, check whether the equipment has been connected properly.

1 Turn on the power.

2 Check that the AUTO OFF lamp is off.
When condensation has formed or some other trouble has occurred, the AUTO OFF lamp lights, and all operations are disabled.

3 Insert the cassette tape.
Insert the tape at its proper position without force.

4 Check that the STOP lamp is on.
When the tape is inserted, the cylinder rotates automatically, the tape is loaded and the unit goes into the stop mode. The EJECT lamp goes off.

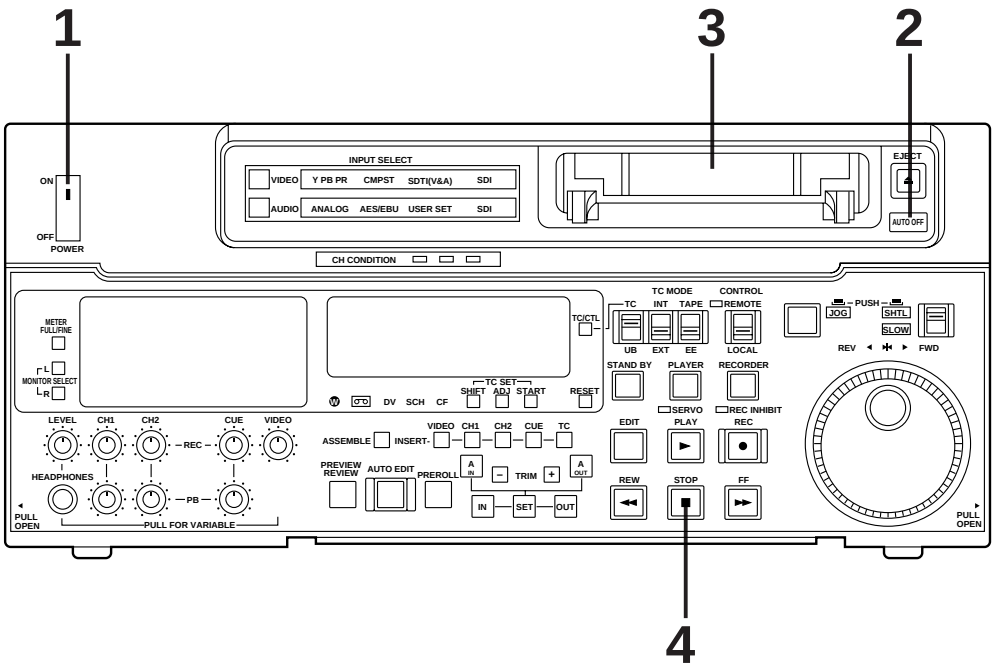

STOP/STAND BY mode

1 When the STOP button is pressed, the unit goes into the stop mode. The STOP lamp lights and the tape stops traveling.

- In order to protect the tape, the unit goes into the standby OFF mode after the time set by setup menu No. 400 (STILL TIMER) has elapsed. When the STOP, REW, FF or PLAY button is pressed, the unit will go into the appropriate mode.

2 When the STAND BY button is pressed, the unit goes into the standby ON/OFF mode. When the button's lamp is lighted, the unit is in the standby ON mode.
When the button is pressed during the stop mode, the unit goes into the standby OFF mode and half-loading mode and the lamp goes off.
When the button is pressed during the standby OFF mode, the unit goes to the standby ON mode.

Still Timer Setting

In order to protect the tape and VTR helical heads, it is recommended that the Still Timer be set for automatic tape protection mode in 30 seconds or under.
Page 67 indicates the settings for menu item 400-Still Timer set. Still Timer settings 4 and below will best protect the tape.

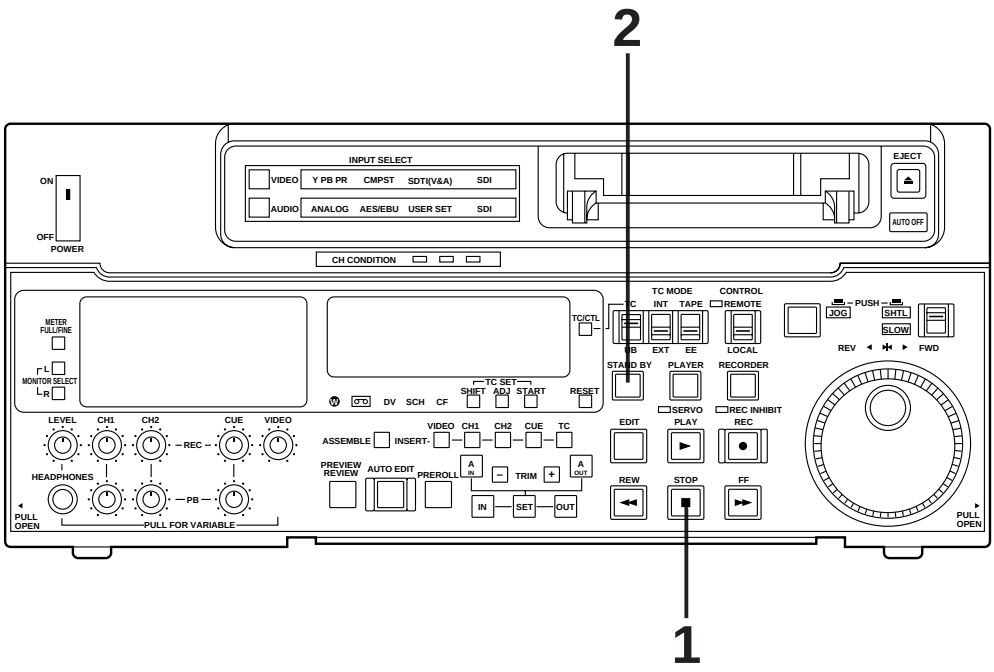

1 Set the accidental erasure prevention tab on the cassette tape to the “recording” position and insert the tape.

2 Press the STOP button to place the unit in the stop mode.

3 Set the TAPE/EE switch to EE.
EE images now appear on the TV monitor.

4 Check that the REC INHIBIT lamp is off.
If this lamp is lighted, set the REC INHIBIT switch to OFF.

5 Select the video and audio input signals and adjust their levels.

5-1 Selecting video/audio input signals

1 Connect the signals to be recorded.

2 Select the input signals using the INPUT SELECT switches on the front panel.
The input signals corresponding to the lighted lamps have been selected.

5-2 Adjusting the video level

1 Normally, the adjustment control ㊹ for the video input level should be pressed in. (unity value)
The video signals will be recorded at the proper level.

2 To adjust the recording level, pull out the adjustment knob and adjust in the +3 dB to –3 dB range.

5-3 Adjusting the audio level

1 Adjust the audio input signal levels of the analog audio CH1/CH2 signals and analog cue signal. Keep the audio input/output level controls ㊹ pushed in (unity value).
The audio signals will be recorded at the proper level.

2 To adjust the recording level, pull out the controls and adjust them. With the CUE signal, adjust the control in such a way that –20 dB will not be exceeded.

6 Press the REC and PLAY buttons together. The REC and PLAY lamps light, and recording commences.

7 To end the recording, press the STOP button.
Recording is ended, and the unit goes into the stop mode.

<Notes>

- Check that the SERVO lamp is lighted during recording. If it flashes or if it is off, the images played back will be disturbed.
- Only the analog composite video input signals can be adjusted. (The digital video and analog component input signals cannot be adjusted.)
- The sound and pictures to be recorded are offset from the playback pictures by 5 frames and recorded. When, for instance, recording sound at a particular timing while the playback pictures are monitored, the sound to be recorded will be recorded at a position which is offset from the playback pictures by 5 frames.

1 Insert the cassette tape, and place the unit in the stop mode.

2 Press the PLAY button.
Regular playback is now commenced.

3 Adjust the audio playback level.
Pull out the audio level controls and turn them clockwise or counterclockwise to adjust the levels. Normally, they are kept in the pushed-in state (unity value).

4 To end playback, press the STOP button.
The VTR now goes into the stop mode.

<Note>
Check that the SERVO lamp is lighted during playback. If it flashes or if it is off, the images played back will be disturbed.

Jog/shuttle

Jog mode

1 Push the search dial to the “in” position.
Be sure that the JOG lamp lights.

2 Rotate the search dial.
The dial’s clickstops are cleared, and the tape is played back at the speed corresponding to the speed at which the dial is turned. The maximum speed can be selected using the setup menu No. 320 (JOG FWD MAX) and No. 321 (JOG REV MAX) settings. When the dial rotation is stopped, a still picture appears. The playback picture is noise-free.

3 To transfer from the jog mode to another mode, press the appropriate button.

Shuttle mode

1 Push the search dial to release it from the “in” position. The SHTL lamp lights, and the unit goes into the shuttle mode.
• Immediately after the power has been turned on, rotate the search dial and set it to the center position.

2 Set the SHTL/SLOW switch to SHTL or SLOW.

3 Rotate the search dial.
When the SHTL/SLOW switch has been set to SHTL, the playback picture speed is varied from 0 to ±60× normal speed depending on the position of the dial. The playback picture speed can be switched to ±16×, ±32× and ±60× normal speed with setting menu No. 101 (SHTL MAX).
The dial’s center position is a clickstop where a still picture appears as the playback image. When the SHTL/SLOW switch has been set to SLOW, the playback picture speed is varied from –4 to +4× normal speed depending on the position of the dial. The maximum speed can be selected using the setup menu No. 317 (VAR FWD MAX) and No. 318 (VAR REV MAX) settings. However, noise appears at speeds other than –0.43 to +1× normal speed.
The dial’s center position is a clickstop where a still picture appears as the playback image. The playback picture is noise-free.

4 To transfer from the shuttle mode to another mode, press the STOP button or other button.

<Note>
When the unit leaves the factory, its operation is set up so that it will be transferred to the shuttle or jog mode when the search dial is rotated. If it is inconvenient for operation to be transferred to the variable-speed mode directly, it can also be transferred through the search button.
Set setting menu No. 100 (SEARCH ENA) to KEY.

1 Select the editing mode.
ASSEMBLE: For assemble editing.
INSERT: For insert editing.

2 Select the editing channel.
In the case of insert editing, press the channel button corresponding to the signals to be edited, and check that its lamp is on.

3 Press the PLAY button.

4 Search for the position where the editing is to be commenced (IN point) while viewing the TV monitor, and press the PLAY and EDIT buttons together at the IN point.

5 Press the STOP or PLAY button at the position where editing is to be completed (OUT point) while viewing the TV monitor. The unit goes into the stop mode, and editing is completed.

<Note>
The sound and pictures to be recorded are offset from the playback pictures by 5 frames and recorded. When, for instance, recording sound at a particular timing while the playback pictures are monitored, the sound to be recorded will be recorded at a position which is offset from the playback pictures by 5 frames.

1 Press the PREROLL button.
The VTR now performs the preroll operation.
- When the edit IN point has been entered, the tape is rewound from the edit IN point for the duration set by setting menu “000,” and the unit then goes into the stop mode.
- When the edit IN point has not been entered, the tape is rewound for the duration set by setting menu “000” from the position where the button was pressed, and the unit then goes into the stop mode.

<Notes>
- The time code or CTL signal must be continuously recorded between the edit IN point and preroll point.
- When the IN point has not been entered, whether to enter the IN point and perform preroll or to perform preroll without entering the IN point can be selected at setting menu No. 311 (AUTO ENTRY).

Automatic editing (Deck to Deck)

Editing refers to the job of using a prerecorded tape to produce a complete recording by joining together separate cuts and deleting unnecessary parts.

The basic steps taken for editing are as follows.

1. Set the CONTROL switch to REMOTE on the player and to LOCAL on the recorder.
2. Select the editing mode.
3. Enter the edit points of the recorder and player.
4. Check and modify the edit points.
5. Check (Preview) before proceeding with the editing.
6. Proceed with the editing.
7. Check (Review) the recording that has resulted from the editing.

Switch settings and adjustments

When the unit is used as the recorder:

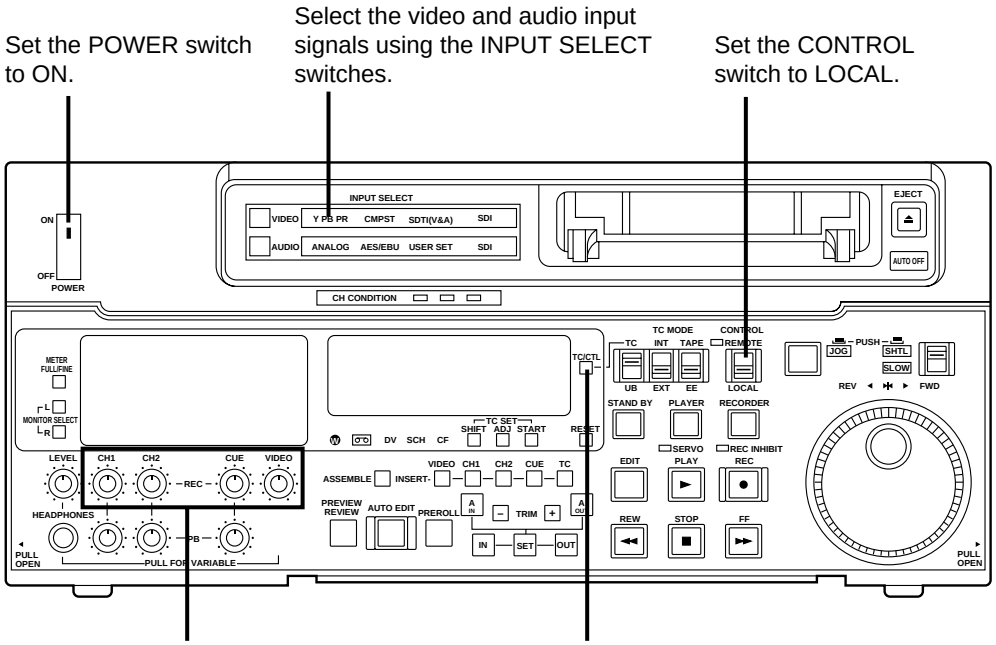

When the unit is used as the player:

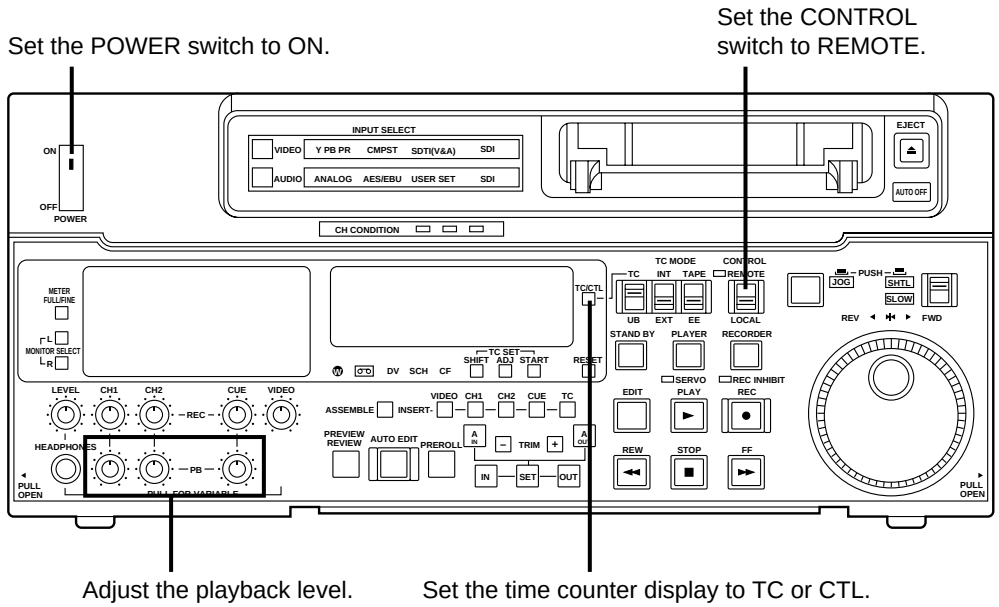

Select the editing mode

1 Select the editing mode.
For assemble editing, press the ASSEMBLE button.
For insert editing, press the INSERT button.
ASSEMBLE: The assemble editing mode (in which cuts are joined together) is established.
INSERT: The insert editing mode (in which cuts are inserted) is established.

2 Select the editing channel.
With assemble editing, the ASSEMBLE lamp lights.
With insert editing, press the button of the channel whose signals are to be edited and lights its lamp.

3 Select the VTR to be operated (this setting is performed when editing with 2 VTRs).
Press the PLAYER or RECORDER button to select the VTR.
PLAYER: Press this button to operate the player VTR and enter the edit points.
RECORDER: Press this button to operate the recorder VTR (this unit) and enter the edit points.

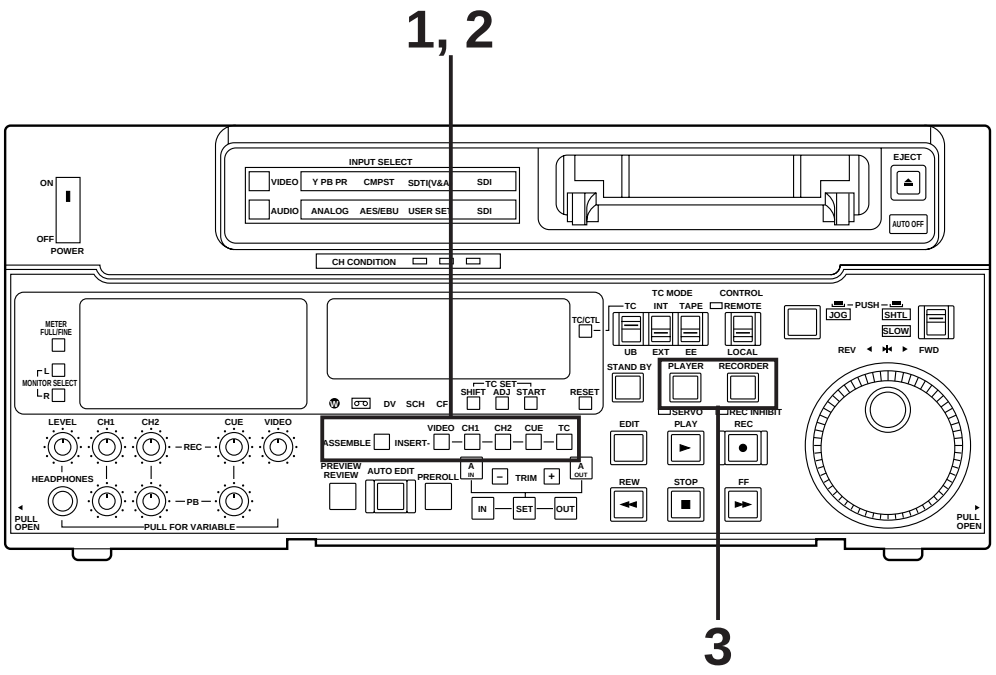

Entering the edit points

1 Search for the edit IN point by performing the jog or shuttle operation.
Establish the still picture mode at the desired position.
Refer to page 28 for details on the jog/shuttle operations.

2 Press the SET button while holding down the IN button.
The edit IN point is now entered.
The edit IN point value now appears on the display.

3 Search for the edit OUT point by performing the jog or shuttle operation.
Establish the still picture mode at the desired position.
Refer to page 28 for details on the jog/shuttle operations.

4 Press the SET button while holding down the OUT button.
The edit OUT point is now entered.
The edit OUT point value now appears on the display.

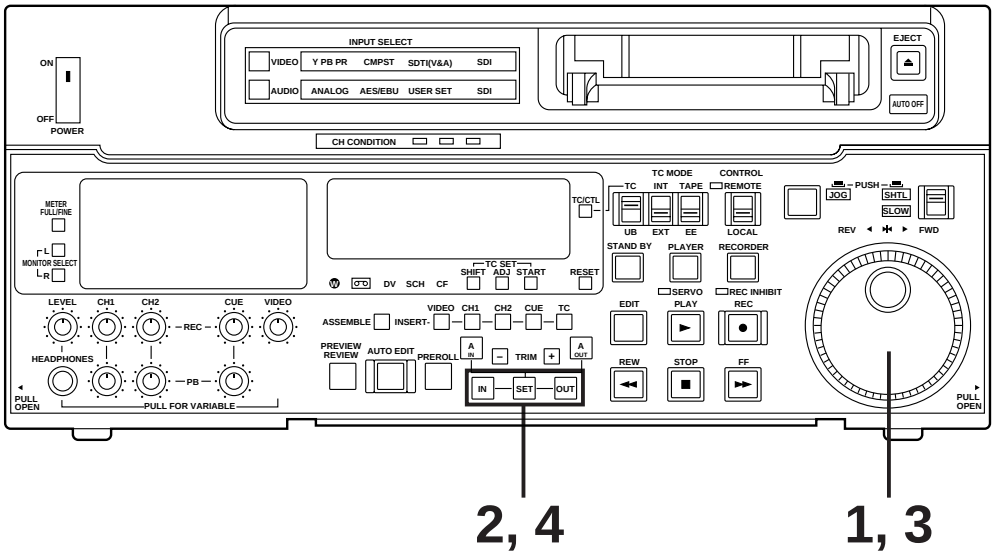

Match frame processing function
When using two VTRs for editing, a total of four edit points—namely, the player's IN and OUT points and the recorder's IN and OUT points—need to be entered. However, since the last edit point is calculated automatically, only three of these edit points must be entered.

Negative duration function
This function is used by combining setup menu No. 301 (IN/OUT DEL) and No. 302 (NEGA FLASH) described on page 63.

Checking the edit points

1 Press the IN (or OUT) button to check the edit point.
The value of the entered edit point appears on the display.

2 Press the PREROLL button while holding down the IN (or OUT) button to check the image at the edit point.
The tape is cued at the edit IN (or OUT) point, and the still picture mode at that point is displayed.
- The EE mode is established if the TAPE/EE switch has been set to the “EE” position when “STOP” has been selected for the setup menu No. 313 (AFTER CUE-UP).

3 Press and hold down the IN and OUT buttons together to check the edit duration.
The duration time appears on the display.

Calculating the duration
- When both edit points have been set, the duration between the two edit points.
- When only one edit point has been set, the duration between the set data and the current tape address.
- When neither edit point has been set, the duration of the previously edited interval.

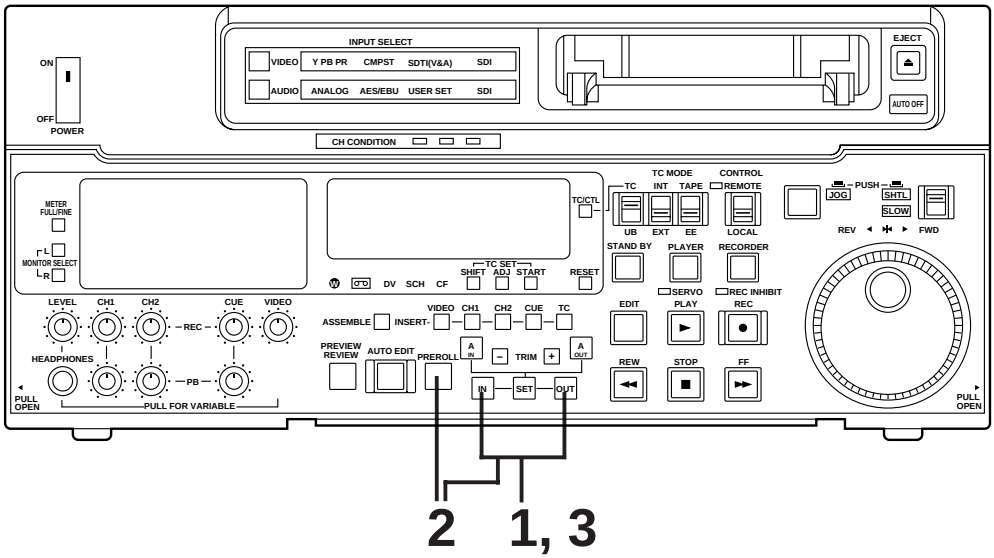

Modifying the edit points

1 Re-entering the edit points
Search for the new edit point by performing the jog or shuttle operation, and press the IN (or OUT) and SET buttons together to re-enter the edit point.

2 Modifying the edit point in frame units (trim function)
Press the TRIM button while holding down the IN (or OUT) button.
The edit point is put ahead by 1 frame each time the + button is pressed.
The edit point is put back by 1 frame each time the – button is pressed.

3 Resetting the edit points

3-1 Resetting both the edit IN and OUT points
• Press the RESET button.

3-2 Resetting either the edit IN or OUT point
• Press the RESET button while holding down the IN (or OUT) button.

<Notes>
• Edit points can be reset only in the CTL mode.
• An edit OUT point can be reset even while editing is in progress.
• The IN and OUT points are automatically reset during the eject mode.

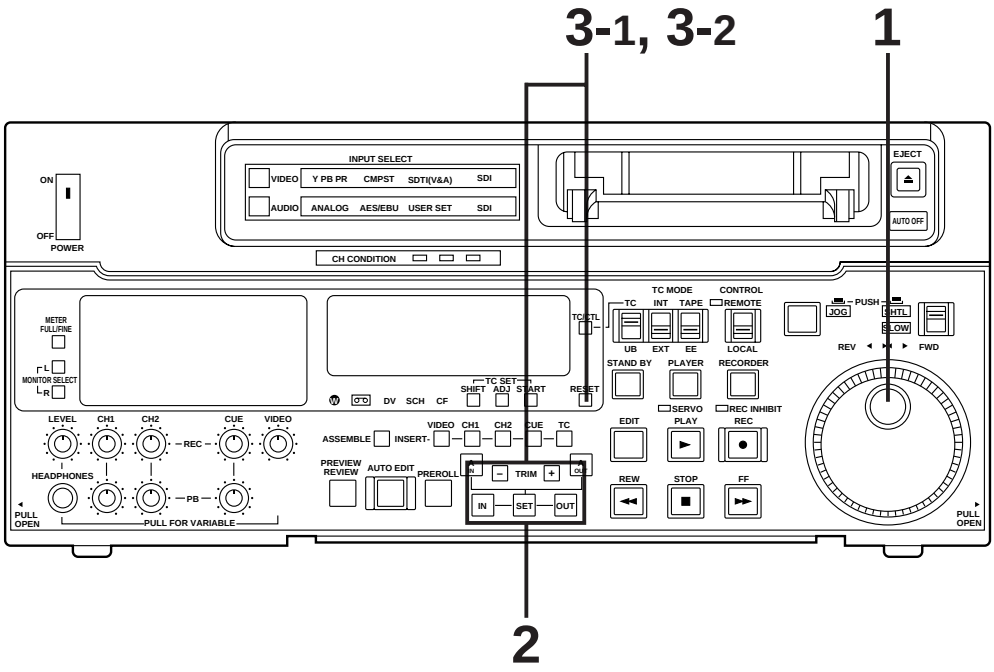

Preview

1 After the edit points have been entered, press the PREVIEW button.
Normal preview is now performed.

<Notes>

- If the edit IN point has not been entered, the position where the PREVIEW button was pressed will be entered at the edit IN point.
- To stop the preview at any time, press the STOP button.
- If the PREVIEW button is pressed again while preview is in progress after the IN point, preview will start again from the beginning.
- When the edit OUT point is reached, the unit automatically goes into the stop mode.

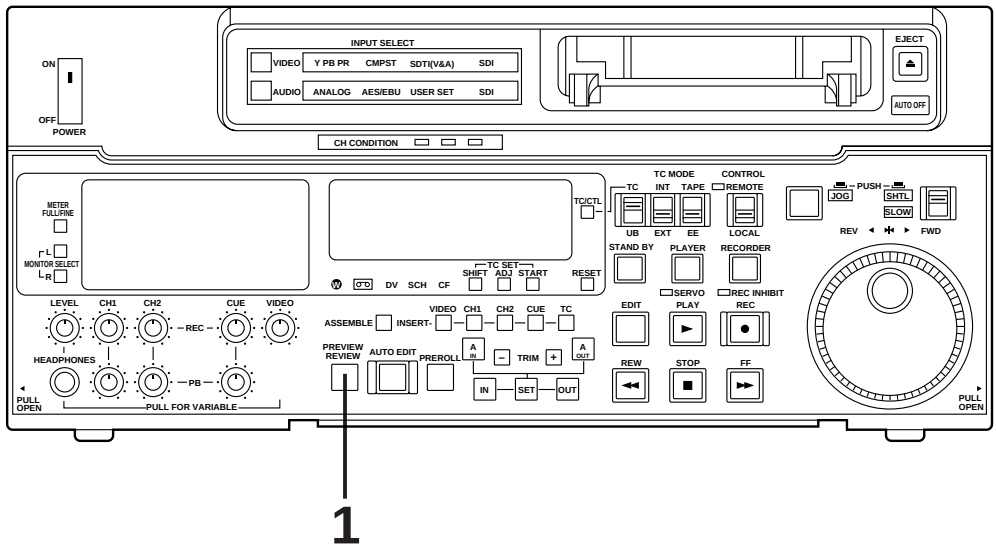

Executing automatic editing

1 Press the AUTO EDIT button.
Automatic editing is now performed.
- To stop the editing at any time, press the STOP button.
- When the edit OUT point is reached, the unit goes into the stop mode after postrolling.

Postroll
With assemble editing, editing continues for approx. 2 seconds even after the edit OUT point has been passed, the tape is rewound to the OUT point, and the unit goes into the stop mode.
With insert editing, the unit goes into the play mode after the edit OUT point has been passed, the tape is rewound to the OUT point, and the unit goes into the stop mode.

Retry function
If the AUTO EDIT button is pressed again after the STOP button has been pressed to stop the editing, editing will start again from the beginning.

Auto tag editing
If the AUTO EDIT button is pressed when the next edit point has not yet been entered upon completion of editing, the previous edit OUT point will be entered as the IN point, and editing is performed accordingly.
To release the auto tag mode, press one of the tape transport buttons (PLAY, etc.).

<Note>
The entered points are automatically cleared after editing is executed. However, the previous editing points can be recalled by pressing the TRIM+ (or TRIM–) and SET buttons together.

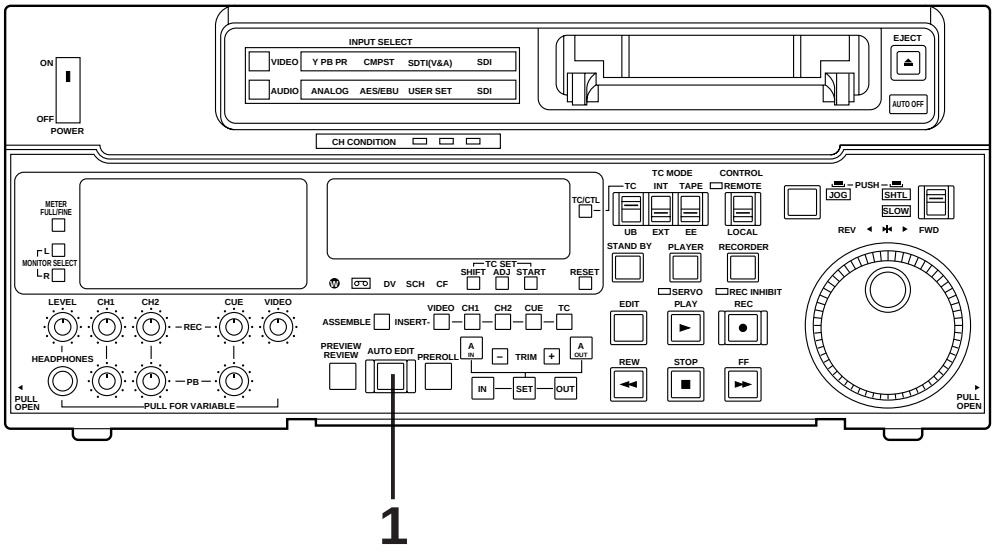

Review

1 Upon completion of the editing, press the REVIEW button.
The review is started in the recorder.
- To stop the review at any time, press the STOP button.
- When the edit OUT point is reached, the unit goes into the stop mode after postrolling.

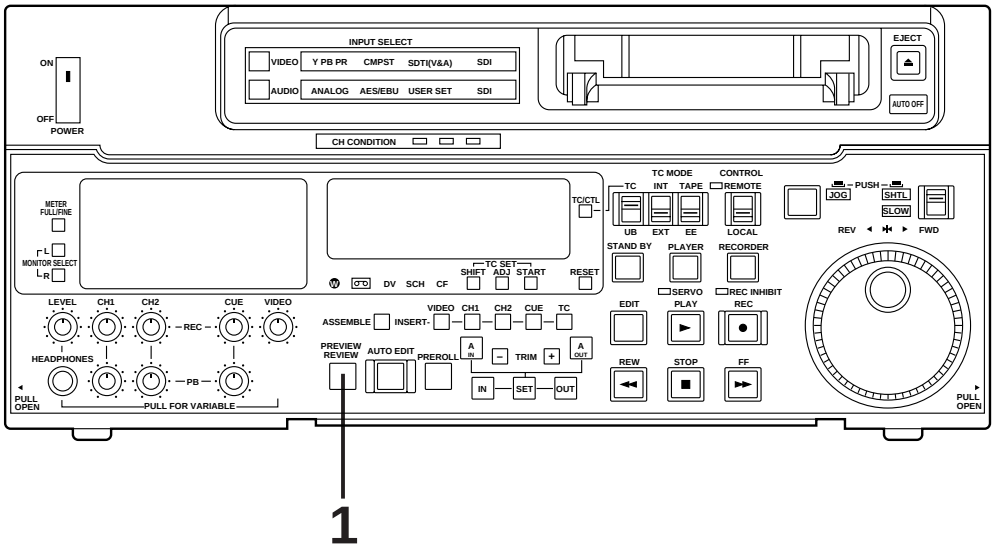

Split editing

Split editing refers to editing where the editing channels are switched while insert editing is in progress.

1 Perform insert editing.

2 Switch the editing channel.
When, for instance, sound from AUDIO CH2 is to be additionally inserted during video channel insert editing:

2-1 Press the AUDIO CH2 button during video channel editing.
The lamp in the button lights and the AUDIO CH2 sound is insert edited.

2-2 Press the AUDIO CH2 button again and turn off the lamp in the button.
This completes the AUDIO CH2 insert editing.

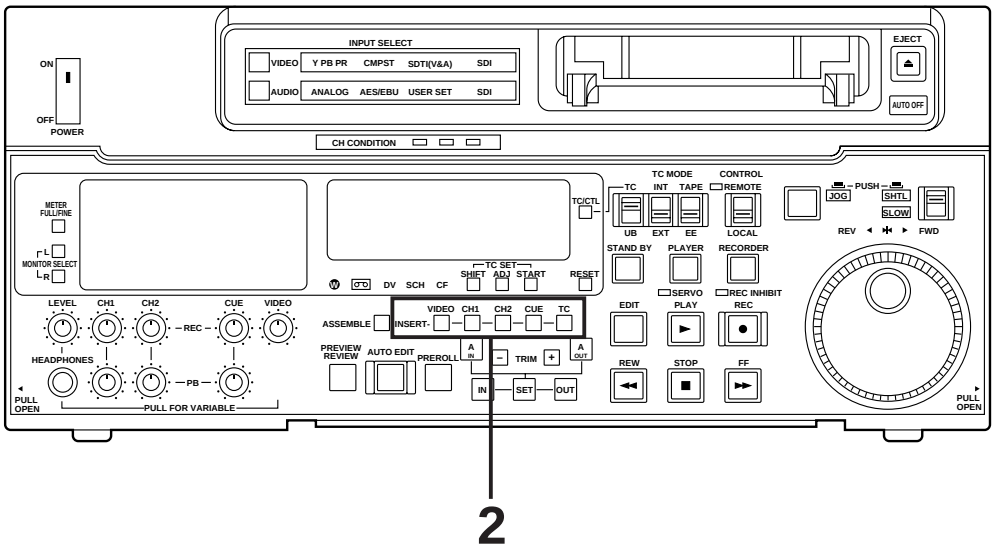

Audio split editing

The video edit points and audio edit points can be entered separately, and they can be offset from each other and edited.
Audio edit points can be entered, deleted and revised only when the insert editing mode has been selected. After the edit points have been entered, follow the same operating procedure as that for insert editing.

■ Entering the edit points

Video IN point: Press the SET button while holding down the IN button.
Video OUT point: Press the SET button while holding down the OUT button.
Audio IN point: Press the SET button while holding down the A IN button.
Audio OUT point: Press the SET button while holding down the A OUT button.

■ Deleting the edit points

Video IN point: Press the RESET button while holding down the IN button.
Video OUT point: Press the RESET button while holding down the OUT button.
Audio IN point: Press the RESET button while holding down the A IN button.
Audio OUT point: Press the RESET button while holding down the A OUT button.

■ Modifying the edit points

Video IN point: Press the TRIM+ or TRIM– button while holding down the IN button.
Video OUT point: Press the TRIM+ or TRIM– button while holding down the OUT button.
Audio IN point: Press the TRIM+ or TRIM– button while holding down the A IN button.
Audio OUT point: Press the TRIM+ or TRIM– button while holding down the A OUT button.

■ Indicating audio split editing

When the audio edit points are entered, " ∗ " appears superimposed on the front panel and TV monitor to denote audio split editing.

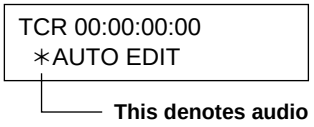

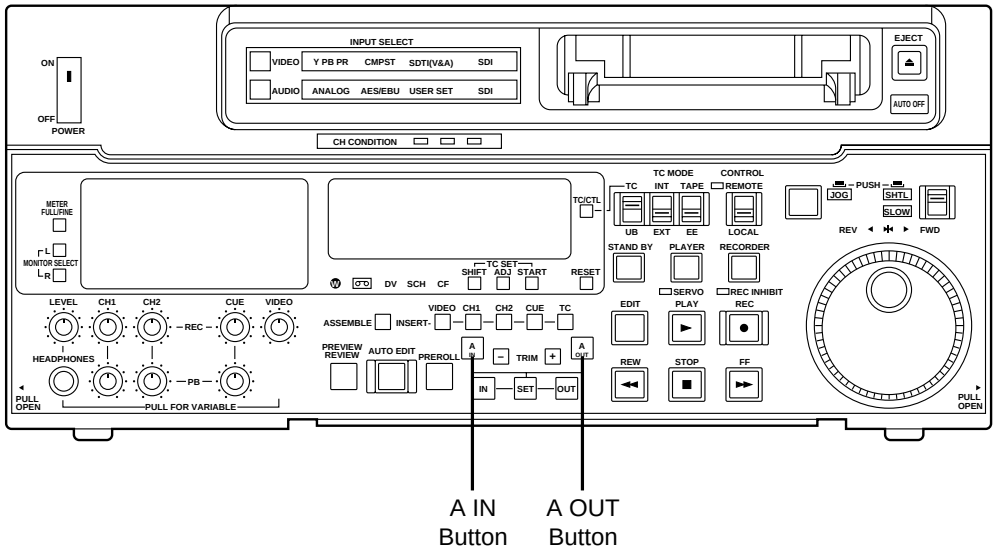

■ Displaying the audio split edit points

The edit points are displayed on the front panel as shown below. (The figure shows an audio IN point.)

Operations

Video IN point: Press the IN button.
Video OUT point: Press the OUT button.
Audio IN point: Press the A IN button.
Audio OUT point: Press the A OUT button.

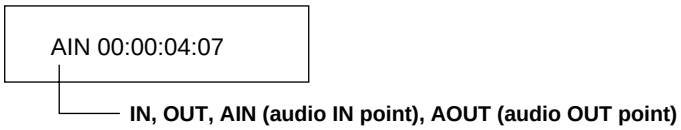

<Note>

If the editing mode is switched to assemble editing after audio edit points have been entered, these points will be deleted.

■ Cueing up the tape to the edit points

Cue-up to video IN point: Press the PREROLL button while holding down the IN button.
Cue-up to video OUT point: Press the PREROLL button while holding down the OUT button.
Cue-up to audio IN point: Press the PREROLL button while holding down the A IN button.
Cue-up to audio OUT point: Press the PREROLL button while holding down the A OUT button.

■ Duration display

The duration can be displayed on the front panel only.

Duration from video IN point to OUT point: Press the IN and OUT buttons simultaneously.
Duration from audio IN point to OUT point: Press the A IN and A OUT buttons simultaneously.

Match frame processing mechanism

When two VTRs are used for audio split editing operations, there will be a total of eight edit points: two pairs of video IN and OUT points, one for the player and the other for the recorder, and two pairs of audio IN and OUT points, one for the player and the other for the recorder. Since the remaining three points are automatically calculated when five of these eight edit points are entered, up to five edit points can be entered.

<Note>

If, during audio split editing, only the video OUT point (or audio OUT point) is entered and automatic editing is executed without the audio IN point (or video IN point) having been entered, editing will continue until the audio OUT point (or video OUT point) is entered or the STOP button is pressed to suspend operation.

Operating procedure 1

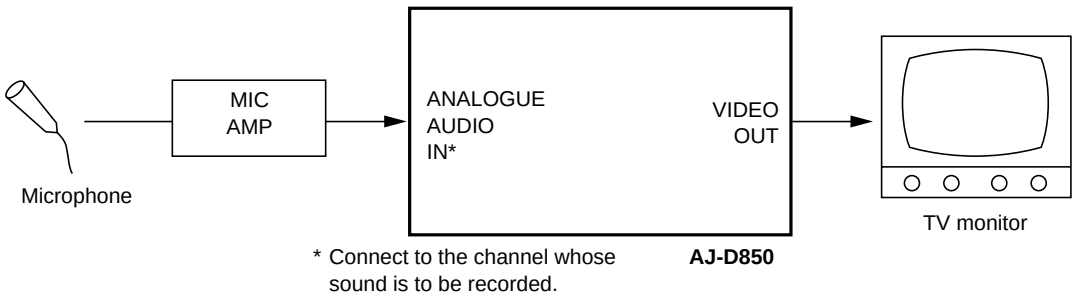

1. Select INT_VO as the setup menu No. 322 (AUD MEM MODE) setting.
2. Select the same setting for the channel (CH1 or CH2) on which the sound is to be recorded and for the setup menu No. 323 (AUD MEM CH) channel.
3. Insert the cassette tape for which the voice-over editing is to be performed.
4. Press the insert button for the channel (CH1 or CH2) on which the sound is to be recorded and ensure that its lamp lights.
5. Press the PLAY button.
6. Search the position (IN point) where voice-over editing is to start while watching the TV monitor.
7. Press the IN and SET buttons simultaneously at the IN point.
8. Input the audio signals to be recorded to the channel which was selected in step 2.
9. Search the position (OUT point) where voice-over editing is to end while watching the TV monitor.
10. Press the A OUT and SET buttons simultaneously at the OUT point. The audio signals to be recorded are stored in the memory.
11. Press the STOP button.
12. Press the AUTO EDIT button to proceed with editing. The audio signals stored in the memory are recorded from the memory onto the cassette tape.

<Note>
The audio signals can be previewed prior to editing by pressing the PREVIEW button while the SET button is held down before the AUTO EDIT button is pressed.

Operating procedure 2

1. Select INT_VO as the setup menu No. 322 (AUD MEM MODE) setting.
2. Select the same setting for the channel (CH1 or CH2) on which the sound is to be recorded and for the setup menu No. 323 (AUD MEM CH) channel.
3. Insert the cassette tape for which the voice-over editing is to be performed.
4. Press the insert button for the channel (CH1 or CH2) on which the sound is to be recorded and ensure that its lamp lights.
5. Enter the IN and OUT points of the positions where voice-over editing is to be performed.
6. Press the PREVIEW button.
7. While watching the TV monitor, input the audio signals to be recorded between the IN point and OUT point into the channel which was selected in step 2. The audio signals to be recorded are stored in the memory.
8. Press the AUTO EDIT button to proceed with editing. The audio signals stored in the memory are recorded from the memory onto the cassette tape.
   <Note>
   The audio signals can be previewed prior to editing by pressing the PREVIEW button while the SET button is held down before the AUTO EDIT button is pressed.

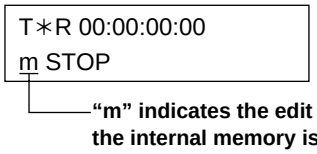

<Notes>

Memory capacity

- Up to 20 seconds of sound can be stored in the unit’s internal memory. It should be borne in mind that even if an attempt is made to store more than 20 seconds of sound in the memory, all the audio signals in excess of the memory’s 20-second capacity will fail to be stored.
- When INT_VO or INT_X, which is performed using the internal memory in the setup menu No. 322 (AUD MEM MODE) setting, “m” appears on the front panel and is superimposed onto the TV monitor display to indicate that the editing mode using the internal memory is now being used.

For operation with an editing controller (AG-A850)

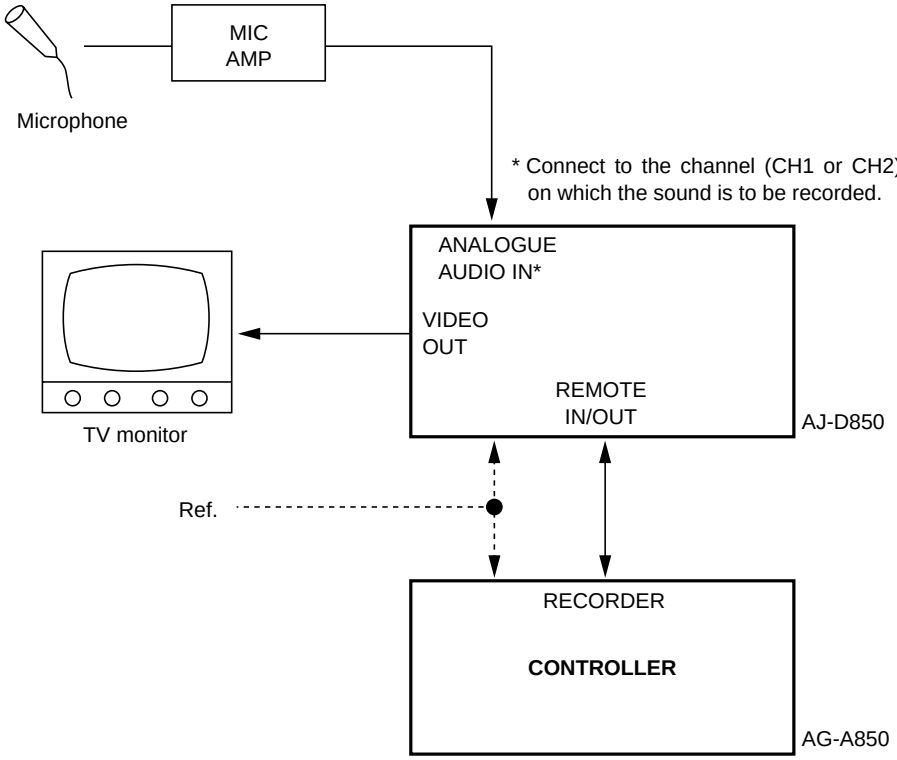

1 Select INT_VO as the setup menu No. 322 (AUD MEM MODE) setting.

2 Select the same setting for the channel (CH1 or CH2) on which the sound is to be recorded and for the setup menu No. 323 (AUD MEM CH) channel.

3 Insert the cassette tape for which the voice-over editing is to be performed into the VTR.

4 Set the CONTROL switch on the VTR to the REMOTE position.

5 Set the controller's SOURCE selector to AUX1.

6 Press the insert button for the channel (CH1 or CH2) on which the sound is to be recorded.

7 Enter the IN and OUT points of the positions where voice-over editing is to be performed.

8 Press the PREVIEW button.

9 While watching the TV monitor, input the audio signals to be recorded between the IN point and OUT point into the channel that was selected in step 6. The audio signals to be recorded are stored in memory.

10 Press the AUTO EDIT button to proceed with editing. The audio signals stored in the memory are recorded from the memory onto the cassette tape.

<Note>
For further details on the AG-A850, refer to the operating instructions of the AG-A850.

Audio cross channel editing (internal)

Example: To record cross-faded audio signals onto CH2

■ **Connections**

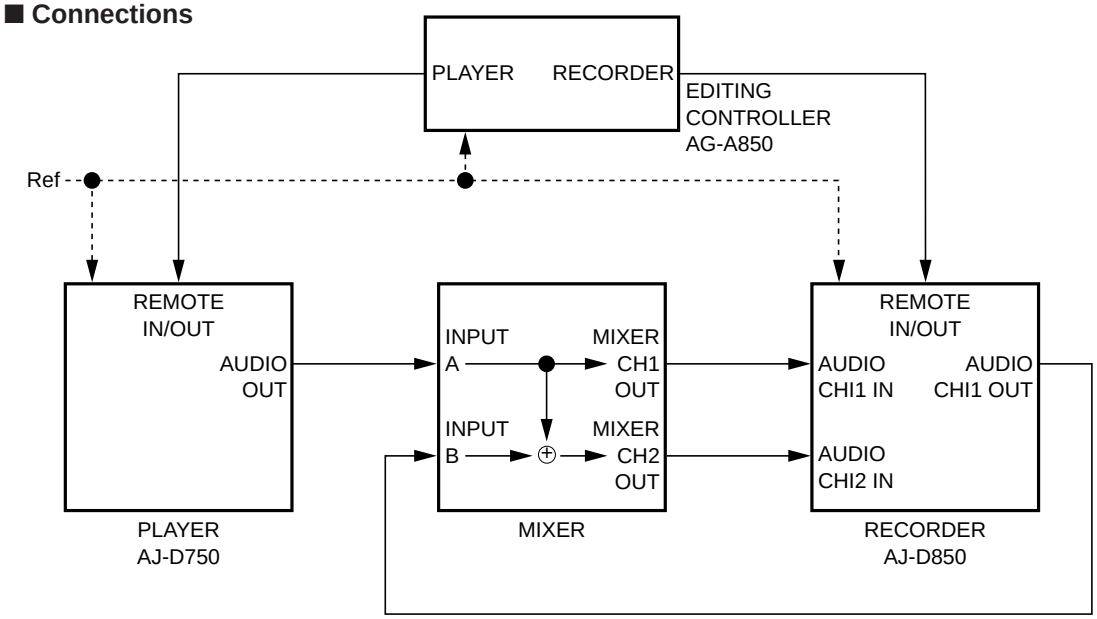

Fig. 1

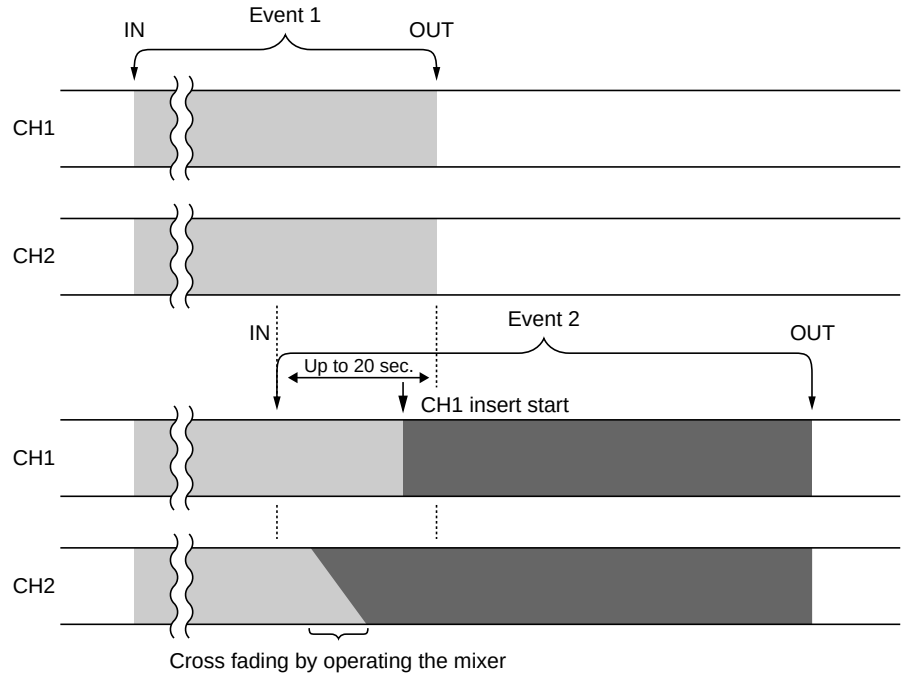

Fig. 2

1 Select INT_X as the setup menu No. 322 (AUD MEM MODE) setting.

2 Select CH2 as the setup menu No. 323 (AUD MEM CH) setting.

3 Select the audio CH1 and CH2 in the insert editing.
<Note>
Select the video as well if the video signals are also going to be edited.

4 Enter the edit points of the first event on the player's tape.

5 Enter the edit points of the first event on the recorder's tape.

6 Operate the mixer in such a way that the player's audio output signals are output from the mixer's CH1 OUT and CH2 OUT connectors. (The same audio signals will be delivered through CH1 and CH2 of the mixer.)

7 Press the AUTO EDIT button. The first event is now recorded on the recorder's tape. (See Fig. 1.)
The last 20 seconds (which is the capacity of the memory) of the audio signals before the OUT point are now saved in the memory.

8 Release the insert button for CH1 so that only the insert button for CH2 is engaged.
<Note>
Select the video as well if the video signals are also going to be edited.

9 Enter the edit point of the next event on the player's tape.

10 Enter the edit point of the next event on the recorder's tape.
<Note>
The IN point must be set up to 20 seconds (more than the cross fading duration) before the previous edit OUT point.

11 Operate the mixer in such a way that the player's audio output signals are output from the mixer's CH1 OUT connectors and that the recorder's (this unit) CH1 OUT audio signals are output from the mixer's CH2 OUT connectors. [The recorder's (this unit) CH1 OUT signals are the audio signals supplied from the internal memory.]

12 Press the AUTO EDIT button.

13 Operate the mixer starting at the IN point, and change the mixer's CH2 OUT signals gradually from the recorder's CH1 OUT audio signals into the player's audio output signals for the mixer's CH2 OUT connectors. (Cross fading)

14 Press the CH1 insert button after the mixer's CH2 output signals have been changed into the player's audio output signals. The STOP mode is established at the OUT point, and the last 20 seconds (which is the capacity of the memory) of the audio signals before the OUT point are now saved in the memory. (See Fig. 2.)

15 To continue editing, repeat steps 8 to 14.

<Notes>
Before attempting to perform voice-over editing or audio cross channel editing using the audio memory unit (AJ-YA752, option), proceed with the following settings for the unit (AJ-D850).
1. Select either AMU_X or AMU_VO as the setup menu No. 322 (AUD MEM MODE) setting.
2. For audio cross channel editing, set the channel on which the signals are to be recorded on setup menu No. 323 (AUD MEM CH).
3. Proceed with operation, using the AJ-YA752 operating instructions as a reference.

■ Additional line recording/playback function

- Select the mode for recording signals in additional lines using setup menu item No. 800 (ADD LINE).
  - **Off:** No signals are recorded in additional lines.
  - **YC422:** The input signals are recorded in 1 line in the 422 mode.
  - **YC411:** The input signals are recorded in 1 line in the 411 mode.
  - **Y1_B/W:** The input signals are recorded in 1 line in their original form as the luminance signal.
  - **Y1_PBF:** The input signals are separated into the Y (luminance) and C (chrominance) signals, and only the Y signal is recorded in 1 line.
  - **C1:** The input signals are separated into the Y (luminance) and C (chrominance) signals, and only the C signal is recorded in 1 line.
  - **Y2_B/W:** The input signals are recorded in 2 lines in their original form as the luminance signal.
  - **Y2_PBF:** The input signals are separated into the Y (luminance) and C (chrominance) signals, and only the Y signal is recorded in 2 lines.
  - **C2:** The input signals are separated into the Y (luminance) and C (chrominance) signals, and only the C signal is recorded in 2 lines.
- Select the additional lines for recording on the sub-menu screen.
- The number of lines in which the teletext signals can be recorded differs depending on which mode for recording the signals in the additional lines has been selected.

■ Teletext signal recording/playback function

- Up to 28 lines per frame of the teletext signals which are input can be recorded and played back.
- The number of lines in which the signals can be recorded differs depending on the setup menu item No. 800 (ADD LINE) setting.
- Depending on the setup menu item No. 800 (ADD LINE) setting, it may not be possible to record the input teletext signals in all of the lines.
- Listed below are the numbers of lines per frame in which the signals can be recorded in each mode.

Mode	Additional lines	Teletext signals
Off	0 line/frame	28 lines/frame
YC422	1 line/frame	15 lines/frame
YC411	1 line/frame	20 lines/frame
Y1_B/W	1 line/frame	28 lines/frame
Y1_PBF	1 line/frame	28 lines/frame
C1	1 line/frame	28 lines/frame
Y2_B/W	2 lines/frame	15 lines/frame
Y2_PBF	2 lines/frame	15 lines/frame
C2	2 lines/frame	15 lines/frame

<Note>

There is some limitation to the number of lines in which signals can be recorded with the recording and playback function of the V blanking data.

Video output (encoder output) signal adjustments

After this system has been connected, the video output signal (ENCODER OUT) must be adjusted if AB roll editing (editing using two source machines) using an editor, for instance, is to be error-free and accurate. (This adjustment must be repeated when one of the connecting cables has been replaced and whenever the connections are changed.)

The adjustment procedure using this unit is outlined below.

1 Check the connections. (See page 22.)

2 Set the REMOTE/LOCAL switch ㉒ on the front panel bottom section to the adjustment position (LOCAL).

REMOTE: For adjusting the video output signals using an external encoder remote controller.

LOCAL: For adjusting the video output signals using this unit.

3 Adjust the source machine independently.

3-1 When using the preset values

Set the PRESET/MANUAL switches of the VIDEO LEVEL, CHROMA LEVEL, SETUP and HUE controls to PRESET.

3-2 When adjusting the video output signals without using the preset values

1 Play back a cassette tape on which standard color bar signals have been recorded.

2 Adjust the controls in such a way that the waveforms on the waveform monitor (WFM) and vectorscope (VSC) resemble those shown in the figures below.

A Setup level

Adjust the control to eliminate deviation.

B Video level

Adjust this level to 100 IRE.

C Chroma level and hue

Adjust the two controls in such a way that the light spot of the vector waveforms comes inside the rectangular grid mark.

■ Waveform on WFM

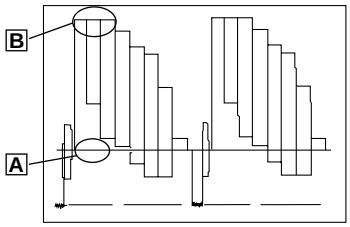

■ Waveform on VSC

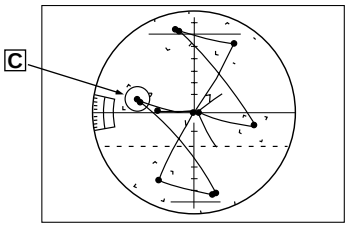

4 Perform the same adjustments on the source machine connected to the unit.

Setup (default settings)

The unit's major settings are performed by making selections on menus.
The setting menus appear on the TV monitor when the TV monitor and VIDEO OUT 3 connector in the unit's connector area are hooked up.

Changing the settings

1 Press the MENU button.
The setup menu appears on the TV monitor and setup menu No. appears on the counter display. (If the setup has already been performed, the screen showing the changes made last will appear.)

2 Rotate the search dial and select the item to be set.
The cursor (∗) on the menu screen moves and the item No. on the display flashes.
- When the dial is rotated clockwise, the item No. is incremented from 001→002→003→004 and so on; when it is rotated counterclockwise, the item No. is decremented.
- The search dial should be used in jog mode if at all possible.
- Hold down the PLAY button and press the FF (next major item) or REW (previous major item) buttons to select the menu by major item.

3 While holding down the search button, rotate the search dial at the position where the change is to be made.
The setting No. now flashes.
When the dial is rotated clockwise, the setting value is incremented; when it is rotated counterclockwise, it is decremented.

4 Release the search button when the setting is completed.
The setting value on the menu screen and display flashes.
- During the SHTL mode, the item moves if the search dial is not at the STILL position.

5 Repeat steps 2 through 4 to change another item.

6 Press the SET button.
The changes are now stored in the memory.
- To return the items to the settings established before the changes were made, press the MENU button.

To return the setup settings to the factory (default) settings, press the RESET button while the menu is displayed. **The following message will now appear:**

SETUP-MENU INIT SET
YES<PLAY>/NO<STOP>

When the PLAY button is pressed, the factory settings are restored.

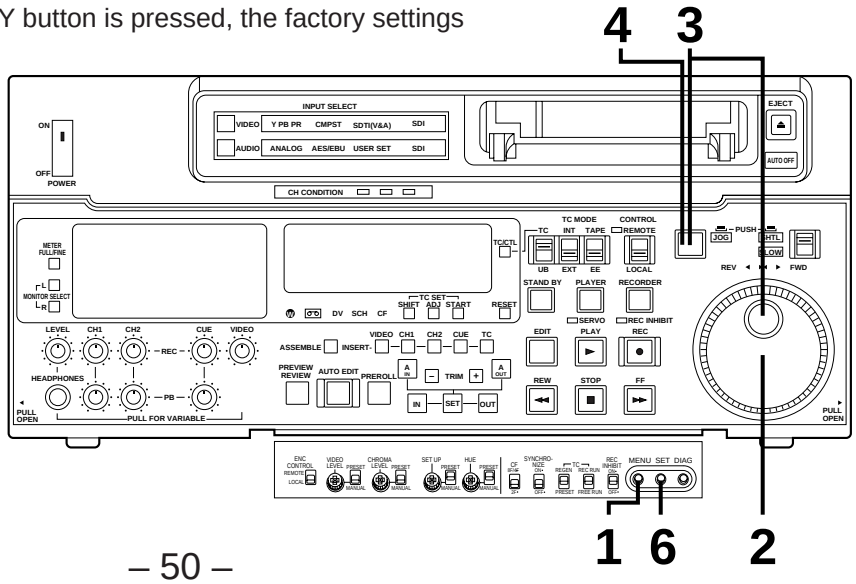

<Note>
- When the RESET button is pressed to return to the factory settings, the factory settings are restored only for the user file currently being used and other user files are not affected.
- The changed SYSTEM menu contents are recorded even if the MENU button is pressed.

This unit can store up to 5 user files (user 1 to user 5) containing different menu settings, and these files can be selected and used.

Changing the file

1 Press the MENU button.

2 Hold down the STAND BY button and press the FF button to switch to the next user file. Hold down the STAND BY button and press the REW button to switch to the previous user file.

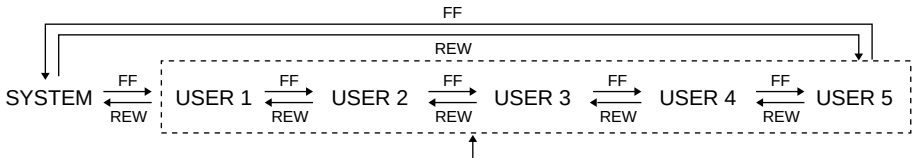

USER FILE
Each user file contains the following items.
- BASIC
- OPERATION
- INTERFACE
- EDIT
- TAPE PROTECT
- TIME CODE
- VIDEO
- AUDIO
- V BLANK
- MENU

3 Repeat the operation in step 2 to select the user file to be used and press the SET button. The user file is changed and stored in the memory.

<Note>
SYSTEM menu items are not included in user files 1 to 5.
Therefore, after selecting the user file, switch to the SYSTEM file and set the SYSTEM menu items.

Lock mode can be set to protect the settings in the system files and user files (USER2 – USER5). Settings can no longer be changed when this mode is set.
To set and release the lock mode for the system files and user files use setup item No. 30 (MENU LOCK) and setup menu item No. A03 (MENU LOCK), respectively.

Setting and releasing the lock mode.

1 Press the MENU button.

2 While holding down the STAND BY button, press the REW or FF button, and select the file for which the lock mode is to be set or released.

3 Turn the search dial and move the cursor (∗) on the menu screen to setup item No. 30 (MENU LOCK) or setup menu item No. A03 (MENU LOCK) for the system or user file.

4 While holding down the search button, turn the search dial and select lock mode setting or release.
To set the lock: Select the 0001 (ON) setting.
To release the lock: Select the 0000 (OFF) setting.

When the lock has been set, “LOCKED” flashes on the menu screen. In addition, the counter display stops flashing and lights.

```
SETUP-MENU  LOCKED
<USER2>    No.000 – 0005
∗000 P–ROLL TIME      5s
 001 CHARA H–POS       5
 002 CHARA V–POS      23
 003 DISPLAY SEL   T&STA
 004 LOCAL ENA     ST&EJ
 005 TAPE TIMER     ±12h
 006 SUPER            ON
 007 CHARA TYPE    WHITE
 008 REMAIN SEL       OFF
```

5 Press the SET button. The setting is now stored in the memory.

<Notes>
- The lock mode cannot be set for the USER1 file settings.
- Even if the RESET button is pressed, the files which has been set to the lock mode cannot be reset to the factory settings.

The contents of the USER2 – USER5 files can be copied (loaded) into the USER1 file. In addition, the contents of the USER1 file can be copied (saved) to the USER2 – USER5 files.

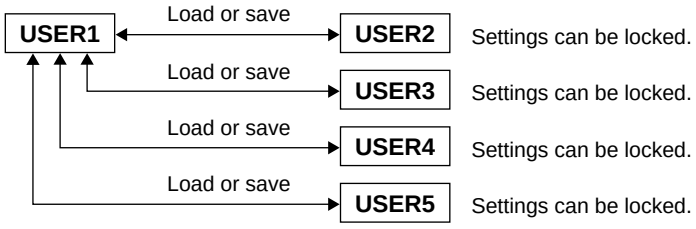

Loading a user file

1 Press the MENU button.

2 While holding down the STANDBY button, press the REW or FF button, and select USER1.

3 Turn the search dial and move the cursor (∗) on the menu screen to setup item No. A00 (LOAD).

```
SETUP-MENU  MENU
<USER1>    NO.A00 - 0000
 803 TELETEXT DET   AUTO
∗A00 LOAD          USER2
 A01 SAVE          USER2
 A02 P.ON LOAD       OFF
 END
```

4 While holding down the search button, turn the search dial and select the user file whose contents are to be loaded into USER1.

5 Press the SET button. The following messages appear on the menu screen and counter display.

Menu screen

```
SETUP-MENU LOAD

  USER2 →  USER1 OK?
   YES<PLAY>/NO<STOP>
```

Counter display

```
TCR  00:00:00:00
SETUP LOAD U-2 → U-1
```

The user file number selected in step 4 is displayed in the shaded area.

6 Press the PLAY button. The settings of the user file selected in step 4 are loaded, and the USER1 menu display appears. When the STOP button is pressed, the USER1 menu display appears while the settings remain unchanged.

7 Turn the search dial and move the cursor (∗) on the menu screen to any setup item except No. A00 (LOAD) and No. A01 (SAVE).

8 Press the SET button. The USER1 settings are now stored in the memory.
If the USER1 settings are not going to be stored in the memory, do not press the SET button but press the MENU button.

Saving a user file

1 Press the MENU button.

2 While holding down the STAND BY button, press the REW or FF button, and select USER1.

3 Turn the search dial and move the cursor (∗) on the menu screen to setup item No. A01 (SAVE).

```
SETUP-MENU  MENU
<USER1>    NO.A00 - 0000
 803 TELETEXT DET   AUTO
 A00 LOAD          USER2
∗A01 SAVE          USER2
 A02 P.ON LOAD       OFF
 END
```

4 While holding down the search button, turn the search dial and select the user file into which the USER1 contents are to be saved. User files which have been set to the lock mode are not displayed. When all the user files have been set to the lock mode, the “LOCKED” display appears and the contents cannot be saved.

5 Press the SET button. The following messages appear on the menu screen and counter display.

Menu screen

```
SETUP-MENU SAVE

  USER1 → USER2 OK?
   YES<PLAY>/NO<STOP>
```

Counter display

```
TCR  00:00:00:00
SETUP SAVE U-1 → U-2
```

The user file number selected in step 4 is displayed in the shaded area.

6 Press the PLAY button. The contents of the USER1 file are saved in the user file which was selected in step 4 and stored in the memory. When the STOP button is pressed, the USER1 menu display appears while the settings remain unchanged.

7 Turn the search dial and move the cursor (∗) on the menu screen to any setup item except No. A00 (LOAD) and No. A01 (SAVE).

8 Press the SET button. The USER1 settings are now stored in the memory.
If the USER1 settings are not going to be stored in the memory, do not press the SET button but press the MENU button.

Automatic loading of user file when the power is turned on

When the user file to be loaded is selected in advance using setup menu item No. A02 (P.ON LOAD), it can be automatically loaded into USER1 when the power is turned on.

SYSTEM menu

<SYSTEM>

Item		Setting		Description
No.	Superimposed display	No.	Superimposed display	
00	SYS SC	0000 ⋮ 0127 ⋮ 0255	–127 ⋮ 0 ⋮ 128	System phase adjustment: Total variable range: ±180° or more –: Advanced +: Delayed **<Note>** If setting operation is performed, the setting value does not return to factory (default) setting.
01	SYS H	0000 ⋮ 0032 ⋮ 0060	–30 ⋮ 0 ⋮ 30	System phase adjustment: SC cycle phase (280 ns steps) –: Advanced +: Delayed **<Note>** If setting operation is performed, the setting value does not return to factory (default) setting.
02	VIDEO PHASE	0000 ⋮ 0032 ⋮ 0064	–32 ⋮ 0 ⋮ 32	Video phase adjustment: 148 ns steps –: C advanced +: C delayed
03	YC COARSE	0000 ⋮ 0002 ⋮ 0004	–2 ⋮ 0 ⋮ 2	YC timing rough adjustment: 148 ns steps –: C advanced +: C delayed
04	YC FINE	0000 ⋮ 0002 ⋮ 0004	–2 ⋮ 0 ⋮ 2	YC timing fine adjustment: 37 ns steps –: C advanced +: C delayed (The digital OUT option YC does not change.)
05	SCH COARSE	0000 0001 0002 0003	0 90 180 270	SCH phase adjustment: 90° units (The S and C phases change but the H phase does not change.)
06	SCH FINE	0000 ⋮ 0128 ⋮ 0255	–124 ⋮ 0 ⋮ 123	SCH phase adjustment: Total variable range: ±45° or more (The S and C phases change but the H phase does not change.)
07	P_B OUT LV	0000 ⋮ 0124 ⋮ 0247	–124 ⋮ 0 ⋮ 123	Component P_B output level adjustment: Total variable range: ±3 dB
08	P_R OUT LV	0000 ⋮ 0124 ⋮ 0247	–124 ⋮ 0 ⋮ 123	Component P_R output level adjustment: Total variable range: ±3 dB

The underline on the setting item denotes the initial setting.

SYSTEM menu

<SYSTEM> (continued)

Item		Setting		Description
No.	Superimposed display	No.	Superimposed display	
10	AV PHASE	0000 ⋮ 0128 ⋮ 0255	–128 ⋮ 0 ⋮ 127	This adjusts the audio output phase with respect to the video output: 20.8 µs steps –: The audio output phase is advanced with respect to the video output. +: The audio output phase is delayed with respect to the video output.
20	SYS H RANGE	0000 0001	FULL FINE	This selects the adjustable range for SYSTEM H during when the ENCODER REMOTE is connected. 0: ±8 µ sec (±30 steps) 1: –1.9 to +2.7 µ sec (–7 to +10 steps) **<Note>** If setting operation is performed, the setting value does not return to factory (default) setting.
21	SYS H OFFSET	0000 0001 0002 0003 0004 0005 0006	–3 –2 –1 0 1 2 3	System phase adjustment: 4.48 µs steps 0: –13.4 µ sec 1: –8.96 µ sec 2: –4.48 µ sec 3: 0 sec 4: +4.48 µ sec 5: +8.96 µ sec 6: +13.4 µ sec **<Note>** Factory settings will remain unchanged even if an attempt is made to perform a setting operation.
30	MENU LOCK	0000 0001	OFF ON	This selects whether the system file lock mode is to be engaged or released. 0: The lock is released (file data can be changed). 1: The lock is engaged (file data cannot be changed).

The underline on the setting item denotes the initial setting.

USER menu

<BASIC>

Item		Setting		Description
No.	Superimposed display	No.	Superimposed display	
000	P-ROLL TIME	0000 ⋮ 0005 ⋮ 0015	0S ⋮ 5S ⋮ 15S	This sets the preroll time which can be set from 0 to 15 seconds in 1-second increments. **<Note>** When the unit is set to automatic editing [PREVIEW, AUTO EDIT], the unit will not operate if the preroll time is set to 0 seconds.
001	CHARA H-POS	0000 ⋮ 0005 ⋮ 0011	0 ⋮ 5 ⋮ 11	This sets the position of the characters on the horizontal plane for the time code and other super displays output to the VIDEO OUT 3 connector. **<Notes>** 1. When setting this item, the DISPLAY SEL status is output to VIDEO OUT 3 even if SUPER OFF has been set. However, when the menu is exited, operation complies with the SUPER OFF/ON setting. Also, CHARA TYPE is output to VIDEO OUT 3 according to the status set in the menu. 2. When the DISPLAY SEL setting causes characters to extend beyond the edges of the screen, the setting value is changed so that the characters are automatically displayed in a position on the screen.
002	CHARA V-POS	0000 ⋮ 0018 ⋮ 0022	0 ⋮ 18 ⋮ 22	This sets the position of the characters on the vertical plane for the time code and other super displays output to the VIDEO OUT 3 connector. **<Notes>** 1. When setting this item, the DISPLAY SEL status is output to VIDEO OUT 3 even if SUPER OFF has been set. However, when the menu is exited, operation complies with the SUPER OFF/ON setting. Also, CHARA TYPE is output to VIDEO OUT 3 according to the status set in the menu. 2. When the DISPLAY SEL setting causes characters to extend beyond the edges of the screen, the setting value is changed so that the characters are automatically displayed in a position on the screen.
003	DISPLAY SEL	0000 0001 0002 0003 0004 0005 0006	TIME T&STA T&S&M T&RT T&YMD T&MDY T&DMY	This is used to select what is to appear as the time code or other superimposed display at the VIDEO OUT 3 connector. 0: Time only 1: Time and operating status 2: Time, operating status and mode 3: Time and recording time 4: Time and recording date (year/month/day) 5: Time and recording date (month/day/year) 6: Time and recording date (day/month/year) **<Notes>** • "DVCPRO MODE," "DV MODE" or "DVCAM MODE" is displayed as the mode when a DVCPRO, DV or DVCAM format tape is used, respectively. • When setting 2 (T&S&M) is used, an error message will appear when a warning or error has occurred. • The recording time and recording date are displayed only when a DV or DVCAM format tape is played back. The operating status is displayed when a DVCPRO format tape is played back.

The underline on the setting item denotes the initial setting.

USER menu

<BASIC> (continued)

Item		Setting		Description
No.	Superimposed display	No.	Superimposed display	
004	LOCAL ENA	0000 0001 0002	DIS ST&EJ ENA	This selects the buttons which can be operated on the front panel when the REMOTE/LOCAL switch has been set to REMOTE. 0: No buttons can be operated. 1: Only the STOP and EJECT buttons can be operated. 2: All buttons except for the RECORDER and PLAYER buttons can be operated.
005	TAPE TIMER	0000 0001	±12h 24h	This selects the 12 or 24 hour display for the CTL counter. 0: 12 hour display 1: 24 hour display
006	SUPER	0000 0001	OFF ON	This selects whether the time code and other super display which are output to the VIDEO OUT 3 connector is to shown. 0: Not shown. 1: Shown.
007	CHARA TYPE	0000 0001	WHITE W/OUT	This selects the display type for the super display output to the VIDEO OUT 3 connector as well as for displays such as the setting menu, etc. 0: White characters against a black background. 1: White characters with a black border.
008	REMAIN SEL	0000 0001	OFF ON	This selects whether the remaining tape time is shown on the front panel. 0: Not shown. 1: Shown. When “T&S&M” is selected as the setup menu item No. 003 (DISPLAY SEL) setting, the remaining tape time is displayed on the third line of the VIDEO OUT 3 connector superimposed display in place of the mode display. **<Note>** Even when “1” (ON) is selected, the remaining tape time is not shown while the unit is calculating the remaining tape time after ejecting or inserting the cassette.
009	SETUP NUMBER	0000 0001	OFF ON	This selects whether the SETUP-MENU No. is displayed on the front panel. 0: The SETUP-MENU No. is not displayed. 1: The SETUP-MENU No. is displayed.
010	MONI CONTROL	0000 0001	MANU AUTO	This sets whether the recorder is to be forcibly set to the EE mode and the player’s playback signals are to be output to the monitor by pressing the recorder’s PLAYER button when a monitor has been connected only to the recorder during deck-to-deck editing. 0: The recorder is not forcibly set to the EE mode. 1: The recorder is forcibly set to the EE mode, and the player’s playback signals are output.

The underline on the setting item denotes the initial setting.

USER menu

<OPERATION>

Item		Setting		Description
No.	Superimposed display	No.	Superimposed display	
100	SEARCH ENA	0000 0001	DIAL KEY	This selects the direct search dial operation. 0: For direct search dial operations. 1: Operation is not transferred to the search mode unless the search button is pressed.
101	SHTL MAX	0000 0001 0002	×16 ×32 ×60	This sets the maximum speed for shuttle operations. 0: 16× normal speed 1: 32× normal speed 2: 60× normal speed **<Note>** During DV or DVCAM format, the maximum speed is 32× normal speed even when 60× is selected.
102	FF. REW MAX	0000 0001 0002	×32 ×60 ×100	This sets the maximum speed for FF and REW operations. 0: 32× normal speed 1: 60× normal speed 2: 100× normal speed **<Note>** During DV or DVCAM format, the maximum speed is 32× normal speed regardless of this setting.
103	AUDIO MUTE	0000 0001	OFF ON	This sets the status until the audio signal is output when operation switches from the stop or search modes to the play mode. 0: The time until the audio is output is shortened. 1: The audio is output after the status stabilizes. **<Note>** When set to 0 (OFF), the sound in the initially output part is incomplete. Therefore, this setting is not recommended for broadcasts.
104	REF ALARM	0000 0001	OFF ON	This selects whether to warn the operator when the REF.VIDEO signal has not been connected. 0: Warning is not given. 1: Warning is given by the flashing STOP lamp.
105	AUTO EE SEL	0000 0001 0002	S/F/R STOP BLACK	This selects the VTR mode in which the EE status is established when the TAPE/EE switch is set to EE. 0: EE status is established in the STOP, FF or REW mode. However, EE status is always established in EJECT mode regardless of the TAPE/EE switch setting. 1: EE status is established only in the stop mode. However, EE status is always established in EJECT mode regardless of the TAPE/EE switch setting. 2: EE status is established only in the stop mode. However, depending on TAPE/EE switch setting EJECT mode is as follows: TAPE/EE switch EE: EE status TAPE/EE switch TAPE: BLACK status for video MUTE status for audio
106	PLAY DELAY	0000 ⋮ 0015	0 ⋮ 15	This set the play delay time in frame increments.

The underline on the setting item denotes the initial setting.

USER menu

<OPERATION> (continued)

Item		Setting		Description
No.	Superimposed display	No.	Superimposed display	
108	FORMAT SEL	0000 0001 0002	DVCPRO DV DVCAM	These settings are for selecting the format when an L cassette or S cassette is used. 0: L cassette → DVCPRO mode S cassette → DV mode 1: L cassette/S cassette → DV mode 2: L cassette/S cassette → DVCAM mode **<Notes>** Bear in mind that, in addition to problems with playback, the trouble described below may occur when a tape which does not match the selected format is inserted. 1. If a DV or DVCAM tape is inserted when the DVCPRO mode setting has been selected, the recording operation will be conducted but no guarantee is given for the resulting performance, etc. Conversely, recording is not possible if a DVCPRO cassette tape is inserted when the DV or DVCAM mode setting has been selected. 2. The REMAIN display fails to appear properly. 3. The slow-down position near the tape start or end is not located accurately. 4. When a tape which does not match the selected format is inserted, no guarantee is given for the resulting performance, etc.
112	AUTO REW	0000 0001	OFF ON	This selects whether to rewind the tape automatically to the tape start when the tape end is detected. 0: The tape stops at the tape end. 1: The tape is rewound to the tape start.
113	MEMORY STOP	0000 0001	OFF ON	This selects whether the VTR is to stop automatically when the counter value reaches “0” during a fast forwarding or rewinding operation in the CTL mode. 0: The VTR does not stop. 1: The VTR stops automatically. **<Notes>** 1. The stop mode concerned is either the stop or the still-picture (SHTL STILL) mode depending on the setup menu No. 313 (AFTER CUE-UP) setting. 2. When both the AUTO REW function and MEMORY function have been selected at the same time, the AUTO REW function takes precedence.

The underline on the setting item denotes the initial setting.

Memory stop function

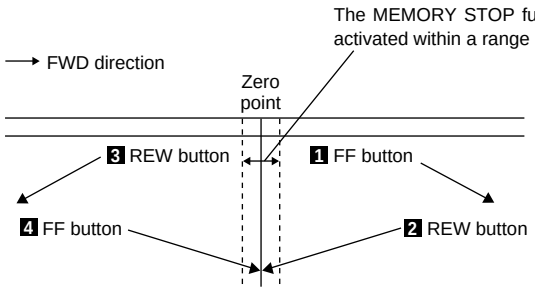

1 When the FF button is pressed, the VTR performs the regular fast forward operation since the zero point is not located in the direction of operation.

2 When the REW button is pressed, the PREROLL lamp lights (the SHTL lamp lights as well), the VTR proceeds with the preroll operation, and it automatically stops when it reaches the position where the counter reads “0.”

3 When the REW button is pressed, the VTR performs the regular rewinding operation since the zero point is not located in the direction of operation.

4 When the FF button is pressed, the PREROLL lamp lights (the SHTL lamp lights as well), the VTR proceeds with the preroll operation, and it automatically stops when it reaches the position where the counter reads “0.”

USER menu

<OPERATION> (continued)

Item		Setting		Description
No.	Superimposed display	No.	Superimposed display	
115	STOP RESPNS	0000	NORMAL	This selects the response when the mode is changed to STOP/STILL while the tape is traveling. 0: Priority is given to the output picture. 1: Priority is given to the response. **<Notes>** • At the 1 (QUICK) setting, the picture may not be as clear in the STOP/STILL mode as it would be at the 0 (NORMAL) setting. • CTL may shift by ±2 frames.
		0001	QUICK	
116	EE MODE SEL	0000	NORMAL	This selects the output signals in the EE mode. 0: Signals which are delayed by an amount equivalent to the time taken for the internal digital signal processing are output. 1: The signals are output without internal digital signal processing. **<Notes>** • The NORMAL setting is forcibly selected for the internal operation when the editing mode is selected, when SDTI is set as the video input signal selection or when INT SG is selected for the video or audio signals. • Use the signals which are output in the EE mode for monitoring purposes.
		0001	THRU	
117	FRZ MODE SEL	0000	DIS	This selects the output pictures from the playback pictures in the STANDBY OFF mode and EJECT mode. 0: The video output is muted. 1: The playback picture is frozen at the moment when the STANDBY OFF mode was established, and output. 2: The playback picture is frozen at the moment when the STANDBY OFF mode and EJECT mode were established, and output. **<Notes>** • The status in the freeze mode follows the setting for setup menu No. 608 (FREEZE SEL). • In the EJECT mode, freeze pictures are output only when 2 (BLACK) is used as the setup menu No. 105 (AUTO EE SEL) setting.
		0001	STBOFF	
		0002	SOF&EJ	

The underline on the setting item denotes the initial setting.

USER menu

<INTERFACE>

Item		Setting		Description
No.	Superimposed display	No.	Superimposed display	
200	PARA RUN	<u>0000</u> 0001	<u>DIS</u> ENA	This selects whether two or more VTRs are to be operated in synchronization. 0: No operation in synchronization 1: Operation in synchronization **<Note>** When operating two or more VTRs in synchronization, set item 200 of all the VTRs to 0001.
201	9P SEL	0000 <u>0001</u>	OFF <u>ON</u>	This selects whether the 9P connector functions when the REMOTE/LOCAL switch has been set to REMOTE. 0: Do not function 1: Function
202	ID SEL	<u>0000</u> 0001	<u>OTHER</u> DVCPRO	This selects the ID information which is returned to the controller. 0: 20 25H 1: DVCPRO's, own ID is returned (F0 33H).
203	25P SEL	<u>0000</u> 0001	<u>OFF</u> ON	This selects whether the PARALLEL (25P) connector functions when the REMOTE/LOCAL switch has been set to REMOTE. 0: Does not function 1: Functions
204	RS232C SEL	<u>0000</u> 0001	<u>OFF</u> ON	These settings are for selecting whether the RS-232C connector is to function when the REMOTE/LOCAL switch is set to REMOTE. 0: Connector does not function. 1: Connector functions.
205	BAUD RATE	0000 0001 0002 0003 0004 <u>0005</u>	300 600 1200 2400 4800 <u>9600</u>	These settings are for selecting the RS-232C communication speed (baud rate).
206	DATA LENGTH	0000 <u>0001</u>	7 <u>8</u>	These settings are for selecting the RS-232C data length. (Unit: bit)
207	STOP BIT	<u>0000</u> 0001	<u>1</u> 2	These settings are for selecting the RS-232C stop bit length. (Unit: bit)
208	PARITY	<u>0000</u> 0001 0002	<u>NON</u> ODD EVEN	These settings are for selecting the none, odd or even for the RS-232C parity bit. 0: Parity bit is not used. 1: An odd number of bits is used for the parity system. 2: An even number of bits is used for the parity system.
209	RETURN ACK	0000 <u>0001</u>	OFF <u>ON</u>	These settings are for selecting whether the ACK code is to be returned when a command is received from RS-232C. 0: ACK code is not returned. 1: ACK code is returned.
210	25P STBY CMD	<u>0000</u> 0001	<u>OFF/ON</u> ON	This selects the method used to detect the STANDBY COMMAND signal input at the PARALLEL (25P) connector. 0: Each time active signals are detected, the STANDBY ON or STANDBY OFF mode is selected alternately. 1: When active signals are detected in the STANDBY OFF mode, the unit is transferred to the STANDBY ON mode. No effect is exerted on operation while the STANDBY ON mode is established.

The underline on the setting item denotes the initial setting.

USER menu

<EDIT>

Item		Setting		Description
No.	Superimposed display	No.	Superimposed display	
301	IN/OUT DEL	0000 0001	MANU AUTO	This selects the operation to be performed when an edit point has been set incorrectly (when the OUT point is before the IN point). 0: Editing is not executed unless the illegal edit point is cleared or set again properly. 1: The edit points already input are automatically cleared.
302	NEGA FLASH	0000 0001	OFF ON	This selects whether to show a negative display when the IN point is greater than the OUT point. 0: No negative display. 1: Negative display.
303	STD/ NON-STD	0000 0001 0002	AUTO STD N-STD	This selects STD or NON-STD in accordance with the composite input signal. 0: Standard/non-standard signals are automatically identified and processed. 1: Standard signals are processed. (Forced STD) 2: Non-standard signals are processed. (Forced NON-STD)
304	SERVO REF	0000 0001	AUTO EXT	This selects the video signal processing. 0: Servo is synchronized with the input signal during recording and editing, or with the REF signal during playback. 1: Servo is synchronized at all times with the REF signal.
305	EDIT RPLCE1	0000 0001 0002 0003	N-DEF CH1 CH2 CH1+2	This sets the channel assignments for the controller's analog audio preset when editing the digital audio of the VTR using a controller which does not have a digital audio edit preset control function. This selects the channel concerned when the VTR CH1 edit preset is set in compliance with the ON or OFF presetting for the analog audio signals designated by the controller. 0: Not set. 1: Compliance with analog CH1 edit preset. 2: Compliance with analog CH2 edit preset. 3: Compliance with either analog CH1 or CH2 edit preset.
306	EDIT RPLCE2	0000 0001 0002 0003	N-DEF CH1 CH2 CH1+2	This selects the channel concerned when the VTR CH2 edit preset is set in compliance with the ON or OFF presetting for the analog audio signals designated by the controller. 0: Not set. 1: Compliance with analog CH1 edit preset. 2: Compliance with analog CH2 edit preset. 3: Compliance with either analog CH1 or CH2 edit preset.
307	EDIT RPLCEC	0000 0001 0002 0003	N-DEF CH1 CH2 CH1+2	This selects the channel concerned when the VTR CUE edit preset is set in compliance with the ON or OFF presetting for the analog audio signals designated by the editor or controller. 0: Not set. 1: Compliance with analog CH1 edit preset. 2: Compliance with analog CH2 edit preset. 3: Compliance with either analog CH1 or CH2 edit preset.

The underline on the setting item denotes the initial setting.

USER menu

<EDIT> (continued)

Item		Setting		Description
No.	Superimposed display	No.	Superimposed display	
308	CONFI EDIT	<u>0000</u> 0001	<u>OFF</u> ON	This selects whether to conduct simultaneous playback while editing is in progress. 0: No simultaneous playback 1: Simultaneous playback **<Note>** Simultaneous playback is valid when the TAPE/EE switch is set to TAPE.
309	AUD EDIT IN	0000 <u>0001</u>	CUT <u>FADE</u>	This selects the connection method for the digital audio edit IN point. 0: Cut processing 1: V Fade processing
310	AUD EDIT OUT	0000 <u>0001</u>	CUT <u>FADE</u>	This selects the connection method for the digital audio edit OUT point. 0: Cut processing 1: V Fade processing
311	AUTO ENTRY	<u>0000</u> 0001	<u>DIS</u> ENA	This selects whether the IN point is to be entered using the PREROLL button when it has not been entered. 0: IN point is not entered. 1: IN point is entered.
312	CF ADJ SEL	<u>0000</u> 0001	<u>PLAYER</u> RECORD	This selects the CF adjustment deck with deck-to-deck editing. 0: The player's edit IN/OUT points are adjusted. (reference as the RECORDER side) 1: The recorder's edit IN/OUT points are adjusted. (reference as the PLAYER side)
313	AFTER CUE-UP	<u>0000</u> 0001	<u>STOP</u> STILL	This selects the mode after cue-up operation is complete. 0: STOP mode 1: SHTL STILL mode
316	VAR STEP	<u>0000</u> 0001	<u>FINE</u> COARSE	This selects the VAR speed during remote control operations. 0: The tape is played at the fine step speed. 1: The tape is played at a speed at which noise-less playback is possible in the –0.43× to +1× (–0.5× to +1×) range. **<Notes>** • The tape will be played at the speed given in parentheses in the DV/DVCAM mode. • At the 1 (COARSE) setting, the phase cannot be synchronized from the editing controller.
317	VAR FWD MAX	<u>0000</u> 0001 0002 0003 0004 0005 0006 0007 0008	<u>+4.1</u> +1.85 +1 +0.75 +0.5 +0.3 +0.2 +0.1 +0.03	This sets the maximum VAR FWD speed. 0: +4.1× (+3.1×) speed 1: +1.85× (+1.85×) speed 2: +1× (+1×) speed 3: +0.75× (+0.5×) speed 4: +0.5× (+0.5×) speed 5: +0.3× (+0.3×) speed 6: +0.2× (+0.2×) speed 7: +0.1× (+0.1×) speed 8: +0.03× (+0.03×) speed **<Notes>** • The tape will be played at the speed given in parentheses in the DV/DVCAM mode. • In the DV/DVCAM mode, the maximum speed is set to +1× when the dial on the front panel is operated. • At any speed setting other than 0 (+4.1), the phase cannot be synchronized from the editing controller.

The underline on the setting item denotes the initial setting.

USER menu

<EDIT> (continued)

Item		Setting		Description
No.	Superimposed display	No.	Superimposed display	
318	VAR REV MAX	0000	–4.1	This sets the maximum VAR REV speed. 0: –4.1× (–3.1×) speed 1: –1.85× (–1.85×) speed 2: –1× (–1×) speed 3: –0.43× (–0.5×) speed 4: –0.3× (–0.3×) speed 5: –0.2× (–0.2×) speed 6: –0.1× (–0.1×) speed 7: –0.03× (–0.03×) speed **<Notes>** • The tape will be played at the speed given in parentheses in the DV/DVCAM mode. • In the DV/DVCAM mode, the maximum speed is set to –0.5× when the dial on the front panel is operated.
		0001	–1.85	
		0002	–1	
		0003	–0.43	
		0004	–0.3	
		0005	–0.2	
		0006	–0.1	
		0007	–0.03	
319	JOG STEP	0000	FINE	This selects the JOG speed during remote control operations. 0: The tape is played at the fine step speed. 1: The tape is played at a speed at which noise-less playback is possible in the –0.43× to +1× (–0.5× to +1×) range. **<Notes>** • The tape will be played at the speed given in parentheses in the DV/DVCAM mode. • At the 1 (COARSE) setting, the phase cannot be synchronized from an editing controller which synchronizes the phase using the JOG command.
		0001	COARSE	
320	JOG FWD MAX	0000	+4.1	This sets the maximum JOG FWD speed. 0: +4.1× (+3.1×) speed 1: +1.85× (+1.85×) speed 2: +1× (+1×) speed **<Notes>** • The tape will be played at the speed given in parentheses in the DV/DVCAM mode. • The maximum speed is set to +1× when the dial on the front panel is operated. • At any speed setting other than 0 (+4.1), the phase cannot be synchronized from an editing controller which synchronizes the phase using the JOG command.
		0001	+1.85	
		0002	+1	
321	JOG REV MAX	0000	–4.1	This sets the maximum JOG REV speed. 0: –4.1× (–3.1×) speed 1: –1.85× (–1.85×) speed 2: –1× (–1×) speed 3: –0.43× (–0.5×) speed **<Notes>** • The tape will be played at the speed given in parentheses in the DV/DVCAM mode. • When the dial on the front panel is operated, the maximum speed is set to –1× in the DVCPRO mode and to –0.5× in the DV/DVCAM mode.
		0001	–1.85	
		0002	–1	
		0003	–0.43	

The underline on the setting item denotes the initial setting.

USER menu

<EDIT> (continued)

Item		Setting		Description
No.	Superimposed display	No.	Superimposed display	
322	AUD MEM MODE	0000	OFF	This selects whether the voice-over or audio cross channel editing which is to be performed using the AJ-YA752 audio memory unit or internal audio memory. 0: Neither voice-over nor audio cross channel editing is performed 1: Audio cross channel editing is performed using the AJ-YA752 audio memory unit. 2: Voice-over editing is performed using the AJ-YA752 audio memory unit. 3: Audio cross channel editing is performed using the internal audio memory. 4: Voice-over editing is performed using the internal audio memory. **<Notes>** • The RS-232C interface will not function with the 1 (AMU_X) or 2 (AMU_VO) setting. • Refer to the instruction manual of the AJ-YA752 audio memory unit for details on how to use each mode using this unit.
		0001	AMU_X	
		0002	AMU_VO	
		0003	INT_X	
		0004	INT_VO	
323	AUD MEM CH	0000	CH1	This sets the channel for the voice-over or audio cross channel editing which is performed using the AJ-YA752 audio memory unit or internal audio memory. 0: The signals are recorded onto CH1. 1: The signals are recorded onto CH2. **<Note>** This setting has no effect when AMU_VO has been selected as the setup menu No. 322 (AUD MEM MODE) setting.
		0001	CH2	
324	POSTROLL TM	0000	0s	This sets the postroll time. Any time from 0 to 5 seconds can be set in 1-second units.
		0001	1s	
		0002	2s	
		0003	3s	
		0004	4s	
		0005	5s	

The underline on the setting item denotes the initial setting.

USER menu

<TAPE PROTECT>

Item		Setting		Description
No.	Superimposed display	No.	Superimposed display	
400	STILL TIMER	0000 0001 0002 0003 0004 0005 0006 0007 0008	0.5s 5s 10s 20s 30s 40s 50s 1min 2min	This selects the time to be taken until the unit goes into the tape protection mode when it is left standing in the stop or search still (JOG/VAR/SHTL) mode. (Unit: s = second, min = minute) **<Note>** With the DV or DVCAM format, the maximum time which can be set is 10 s even when a setting above 10 s has been selected. The selection screen, however, will operate for up to 2 minutes.
401	SRC PROTECT	0000 0001	STEP HALF	This selects the operation during the tape protection mode when the unit is left standing in the still status during the search mode (JOG/VAR/SHTL). 0: STEP FWD. 1: HALF LOADING. **<Note>** When STEP FWD is selected, the unit automatically goes into the HALF LOADING mode when the total time for which the unit is left standing in the still status reaches 30 minutes (DVCPRO) or 1 minute (DV or DVCAM).
402	DRUM STDBY	0000 0001	OFF ON	This selects the drum operation in the STANDBY OFF mode. 0: The drum stops rotating. 1: The drum continues rotating.
403	STOP PROTECT	0000 0001	STEP HALF	This selects the operation in the tape protection mode when the unit has been left standing in the STOP mode. 0: STEP FWD 1: HALF LOADING **<Note>** When STEP FWD is selected, the unit is automatically transferred to the HALF LOADING mode when the total time during which it has been left standing in the STOP mode reaches 30 minutes (or 1 minute with a DV/DVCAM tape).

The underline on the setting item denotes the initial setting.

<Note>
In order to protect the tape and VTR helical heads, it is recommended that the Still Timer be set for automatic tape protection mode in 30 seconds or under.

<TIME CODE>

Item		Setting		Description
No.	Superimposed display	No.	Superimposed display	
500	VITC POS-1	0000 0001 0002 0003 0004 0005 0006 0007 0008 0009 0010	10L 11L 12L 13L 14L 15L 16L 17L 18L 19L 20L	This sets the position where the VITC signal is to be inserted. (The same line as for VITC POS-2 in 501 cannot be selected.)

The underline on the setting item denotes the initial setting.

USER menu

<TIME CODE>

Item		Setting		Description
No.	Superimposed display	No.	Superimposed display	
501	VITC POS-2	0000 0001 0002 0003 0004 0005 0006 0007 0008 0009 0010	10L 11L 12L 13L 14L 15L 16L 17L 18L 19L 20L	This sets the position where the VITC signal is to be inserted. (The same line as for VITC POS-1 in 500 cannot be selected.)
502	VITC BLANK	0000 0001	BLANK THRU	This selects whether to output the VITC data to the positions selected by VITC POS-1 in 500 and VITC POS-2 in 501. 0: Data is not output. 1: Data is output.
503	TCG REGEN	0000 0001 0002	TC&UB TC UB	This selects the signal to be regenerated when the time code generator (TCG) in the REGEN mode. 0: Both the time code and user bit are regenerated. 1: Only the time code is regenerated. 2: Only the user bit is regenerated.
504	REGEN MODE	0000 0001 0002 0003	AS&IN ASSEM INSRT SW	This selects whether the time code is to be regenerated during automatic editing using the unit's control panel. 0: Time code is regenerated with assemble or insert editing. 1: Time code is regenerated with assemble editing. 2: Time code is regenerated with insert editing. 3: Setting complies with REGEN/PRESET switch setting.
505	EXT TC SEL	0000 0001	LTC VITC	This selects the time code to be used when an external time code is to be used. 0: The LTC of the TIME CODE IN connector is used. 1: The video signal VITC is used.
506	BINARY GP	0000 0001 0002 0003 0004 0005 0006 0007	000 001 010 011 100 101 110 111	This sets the usage status of the user bit of the time code generated by the TCG. 0: NOT SPECIFIED (character set not specified) 1: ISO CHARACTER (8 bits character set based on ISO646, ISO2022) 2: UNASSIGNED 1 (undefined) 3: UNASSIGNED 2 (undefined) 4: UNASSIGNED 3 (undefined) 5: PAGE/LINE 6: UNASSIGNED 4 (undefined) 7: UNASSIGNED 5 (undefined)
507	PHASE CORR	0000 0001	OFF ON	This selects whether to control the phase correction of the LTC generated by the TCG. 0: Phase correction control is not performed. 1: Phase correction control is performed.
508	TCG CF FLAG	0000 0001	OFF ON	This selects whether the CF flag of the TCG is to ON. 0: CF flag is OFF. 1: CF flag is ON.
509	DF MODE	0000 0001	DF NDF	This selects the DF/NDF mode for CTL and TCG. 0: Drop frame mode. 1: Non-drop frame mode. No. 509 is valid when the CONTROL is LOCAL or LOCAL ENA of item 004 to "ENA".

The underline on the setting item denotes the initial setting.

USER menu

<TIME CODE> (continued)

Item		Setting		Description
No.	Superimposed display	No.	Superimposed display	
511	TC OUT REF	0000 0001	V OUT TC_IN	This is used to switch the phase of the time code, which is output from the TIME CODE OUT connector, for the external LTC input when the TC INT/EXT switch is at the EXT position. (In EE mode only) 0: Time code is synchronized with output video signal. 1: Time code is synchronized with external time code input.
512	VITC OUT	0000 0001	SBC VAUX	This selects how the VITC which is to be superimposed onto the output video signal is to be output. 0: During recording: The input time code, which was selected by the setup menu No. 505 (EXT TC SEL) setting and TC INT/EXT switch, is output as the VITC. During playback: The time code recorded in the SBC area is output as the VITC. 1: During recording: The time code detected from the input video signal is output as the VITC. During playback: The time code recorded in the VAUX area is output as the VITC. **<Note>** The time code detected from the input video signal is automatically recorded in the VAUX area while pictures are being recorded.

The underline on the setting item denotes the initial setting.

<VIDEO>

Item		Setting		Description
No.	Superimposed display	No.	Superimposed display	
600	PB/PR IN LV	0000 0001	MII B-CAM	This selects the component input signal level. 0: MII level. 1: ß cam level.
601	INT BB SIG	0000 0001	OFF BB	This selects whether to generate the internal black burst signal. 0: Signal is not generated. 1: Signal is generated.
602	INPUT C KILL	0000 0001	B/W AUTO	This selects color killer processing for the video input signals. 0: The signals are forcibly processed as B/W signals. 1: The signals are automatically processed.
603	OUT VSYNC	0000 0001	N-VF VF	This selects whether to float the vertical sync position of the video output in order to align the video output phase with the input in the EE/record/edit modes. 0: Signals are not floated. 1: Signals are floated.

The underline on the setting item denotes the initial setting.

SBC (sub code data) area:
This area is separate from the video and audio data area on the helical track. The time codes complying with SMPTE/EBU standards, recording dates and times, and other tape control information are stored here. As with the conventional LTC (linear time code), the time code can be read even during rewinding or fast forwarding. It can also be read out when the tape has stopped.

VAUX (video auxiliary data) area:
This area is to be found in the video data area on the helical track. The additional information relating to the video data is stored here.

USER menu

<VIDEO> (continued)

Item		Setting		Description
No.	Superimposed display	No.	Superimposed display	
604	V-MUTE SEL	0000 0001	N-MUTE LOW RF	This selects whether the video output signals are to be muted when the blank portion of the tape is detected during playback. 0: No muting. (Freeze) 1: Muting. (Set to gray.)
605	CC (F1) BLANK	0000 0001	BLANK THRU	This selects ON or OFF for the closed capture signal in the first field. 0: Forced blanking performed. 1: Blanking not performed.
606	CC (F2) BLANK	0000 0001	BLANK THRU	This selects ON or OFF for the closed capture signal in the second field. 0: Forced blanking performed. 1: Blanking not performed.
608	FREEZE SEL	0000 0001	FIELD FRAME	This selects the freeze mode for still pictures. 0: Field freeze. 1: Frame freeze. **<Note>** When frame freeze has been selected, the frame slow status is established with the slow setting.
610	OUT C KILL	0000 0001	B/W COLOR	This selects chroma color killer processing for the video output signals. 0: The signals are forcibly processed as B/W signals. 1: The signals are automatically processed.
611	EDH	0000 0001	OFF ON	This selects whether to superimpose EDH onto the serial output signals. 0: EDH is not superimposed. 1: EDH is superimposed. **<Note>** This item is valid when the optional serial interface board has been installed.
613	VIN SETUP	0000 0001	THRU CUT	This selects whether the composite signal is to be recorded with setup or without setup. 0: When recording signals with no setup. 1: When recording signals with 7.5% setup. **<Note>** When recording composite signals, be sure to double-check whether the signals are to be recorded with or without setup.
614	VOUT SETUP	0000 0001	THRU ADD	This selects the composite output signal. 0: The signal is output without setup. 1: The signal is output with 7.5% setup. **<Note>** When setting this menu item, bear the setup menu No. 616 (CMPNT SETUP) setting in mind.
616	CMPNT SETUP	0000 0001	THRU CUT	When composite, component and serial (digital) signals are to be output: 0: They are output in their original form. 1: They are output without the 7.5% setup signal.
617	INTER-POLATE	0000 0001	OFF AUTO	Although vertical interpolation is performed automatically during slow-motion playback and the vertical motion of the playback picture is reduced, this menu item enables the interpolation operation to be forcibly turned off. 0: The interpolation operation is forcibly turned off. 1: The interpolation operation is automatically turned on during slow-motion playback.

The underline on the setting item denotes the initial setting.

USER menu

<AUDIO>

Item		Setting		Description
No.	Superimposed display	No.	Superimposed display	
700	CH1 IN LV	0000 0001 0002	4dB 0dB -20 dB	This selects the audio input (CH1) reference level switching.
701	CH2 IN LV	0000 0001 0002	4dB 0dB -20 dB	This selects the audio input (CH2) reference level switching.
702	CUE IN LV	0000 0001 0002 0003	4dB 0dB -20 dB -60 dB	This selects the CUE input reference level switching.
703	CH1 OUT LV	0000 0001 0002	4dB 0dB -20 dB	This selects the audio output (CH1) reference level switching.
704	CH2 OUT LV	0000 0001 0002	4dB 0dB -20 dB	This selects the audio output (CH2) reference level switching.
705	CUE OUT LV	0000 0001 0002	4dB 0dB -20 dB	This selects the CUE output reference level switching.
706	MONIL OUT LV	0000 0001 0002	4dB 0dB -20 dB	This selects the audio monitor output (Lch) reference level switching.
707	MONIR OUT LV	0000 0001 0002	4dB 0dB -20 dB	This selects the audio monitor output (Rch) reference level switching.
708	MONI OUT	0000 0001	UNITY VAR	This selects the audio monitor output volume UNITY/VARIABLE reference switching. 0: The volume is output at the preset value. 1: The volume is linked with the headphones volume control.
709	EMPHASIS	0000 0001	OFF ON	This sets the emphasis ON or OFF.
710	CH1 IN SEL	0000 0001	ANA DIGI	This selects the CH1 input when USER SET has been selected by pressing the unit's AUDIO input selector switch. 0: Analog input. 1: Digital input.
711	CH2 IN SEL	0000 0001	ANA DIGI	This selects the CH2 input when USER SET has been selected by pressing the unit's AUDIO input selector switch. 0: Analog input. 1: Digital input.
712	DIGI IN SEL	0000 0001 0002	AES SIF1_2 SIF3_4	This selects the CH1 and CH2 digital input when USER SET has been selected by the unit's AUDIO input selector switch. 0: AES. 1: Serial I/F 1 and 2. 2: Serial I/F 3 and 4. **<Note>** Selections 1 and 2 are selected when the serial option is mounted.

The underline on the setting item denotes the initial setting.

USER menu

<AUDIO> (continued)

Item		Setting		Description
No.	Superimposed display	No.	Superimposed display	
713	MONI CH SEL	<u>0000</u> 0001 0002	<u>MANU</u> AUTO1 AUTO2	This selects the monitor output. 0: The output is as selected in MONITOR SELECT. 1: The output defaults to CUE except when speed factor is between –0.43× and 1×, inclusive, in which case output is PCM AUDIO. 2: The output defaults to CUE except in PLAY mode, in which case output is PCM AUDIO. **<Note>** These menu settings are valid when CH1 or CH2 has been selected by the MONITOR SELECT L/R switches on the front panel. (When CUE has been selected, the CUE signal will be output at all speeds regardless of the above menu setting.)
714	REC CH1	<u>0000</u> 0001 0002	<u>CH1</u> CH2 CH1+2	This selects the input signal to be recorded on the audio CH1 track. 0: Audio input CH1 signal. 1: Audio input CH2 signal. 2: Mixed audio input CH1 and CH2 signal.
715	REC CH2	0000 <u>0001</u> 0002	CH1 <u>CH2</u> CH1+2	This selects the input signal to be recorded on the audio CH2 track. 0: Audio input CH1 signal. 1: Audio input CH2 signal. 2: Mixed audio input CH1 and CH2 signal.
716	REC CUE	<u>0000</u> 0001 0002 0003	<u>CUE</u> CH1 CH2 CH1+2	This selects the input signal recorded in CUE. 0: CUE input 1: The signal selected in Setup Menu No. 714 is recorded. 2: The signal selected in Setup Menu No. 715 is recorded. 3: A mixed signal of the signals selected in Setup Menu No. 714 and Setup Menu No. 715 is recorded.
718	DV OUTPUT	<u>0000</u> 0001 0002	<u>ST1</u> ST2 ST1+2	This selects the AUDIO CH1 and CH2 output signals during DV or DVCAM format playback. 0: The CH1 track signals are output to CH1 and the CH2 track signals to CH2. 1: The CH3 track signals are output to CH1 and the CH4 track signals to CH2. 2: The mixed CH1 and CH3 track signals are output to CH1 and the mixed CH2 and CH4 track signals to CH2. **<Note>** This item setting is valid only when the tape recorded on the four channels of the DV or DVCAM format is played back.
719	PB FADE	<u>0000</u> 0001 0002	<u>AUTO</u> CUT FADE	This selects the processing method for the audio edit points (IN point, OUT point) during playback. 0: According to the status during recording. 1: Forced CUT 2: Forced FADE
720	EMBEDDED AUD	0000 <u>0001</u>	OFF <u>ON</u>	This selects whether to superimpose the audio data onto the serial output. 0: Data is not superimposed. 1: Data is superimposed. **<Note>** This item is valid when the optional serial interface board has been installed.
722	INT SG	<u>0000</u> 0001	<u>OFF</u> ON	This selects whether to use the internal signals as the audio input signals. 0: The internal signals are not selected. 1: The internal signals are selected. **<Note>** The internal signals have a frequency of 1 kHz.

The underline on the setting item denotes the initial setting.

USER menu

<AUDIO> (continued)

Item		Setting		Description
No.	Superimposed display	No.	Superimposed display	
723	DV PB ATT	0000 0001	OFF ON	This selects the audio output level for DV or DVCAM format playback. 0: The audio output level is not attenuated. 1: The audio output level is attenuated (reduced). **<Notes>** As indicated below, whether the setting takes effect or not depends on the size of the cassette tape used. 1. When an “L” size cassette is used The setting takes effect only when “DV” or “DVCAM” has been selected as the setting for setup menu No. 108 (FORMAT SEL). 2. When an “M” size cassette is used The setting does not take effect. 3. When an “S” size cassette used The setting takes effect.
724	MONI SEL INH	0000 0001	OFF ON	This selects whether to allow (enable) or prohibit (disable) the operation of the MONITOR SELECT and MONITOR SET buttons on the front panel. 0: The buttons can be operated. 1: Operation of the buttons is prohibited.
725	CUE SLOW	0000 0001	STEP LINEAR	This selects the tape travel status (CUE track playback status) during SLOW playback. 0: Priority is given to the output picture, and tape travel is set to the step feed status. 1: Priority is given to CUE track playback, and the tape travel is set to the linear status. **<Notes>** When “1” (LINEAR) has been set: • It may not be possible to achieve as clear a picture as in the STEP mode. • The CTL counter may not operate properly.
726	CUE OUT	0000 0001	NORMAL DIRECT	This selects the output signals from the CUE OUT connector. 0: The timing is aligned with the output picture. 1: The signals recorded on the tape are output with no delay. **<Note>** When “1” (DIRECT) has been set, the output picture and CUE output timing will differ.
727	MONI MIX L	0000 0001	OFF CH1+2	This enables mixed signals to be selected for the monitoring through the headphones. 0: The signals are not mixed. 1: The CH1 and CH2 signals are mixed and output to the left channel.
728	MONI MIX R	0000 0001	OFF CH1+2	This enables mixed signals to be selected for the monitoring through the headphones. 0: The signals are not mixed. 1: The CH1 and CH2 signals are mixed and output to the right channel.
729	REC PT MUTE	0000 0001	OFF ON	This selects whether to mute the sound at the joins in the recording during playback in the DV or DVCAM format. 0: The sound is not muted. 1: The sound is muted.
730	CUE OUT SEL	0000 0001	OFF ON	This selects whether the cue signal is to be output to the main line system output in the search mode. 0: The cue signal is not output. 1: The cue signal is output. (This applies only when a setting other than MANU has been selected for setup menu item No. 713 (MONI CH SEL).)

The underline on the setting item denotes the initial setting.

USER menu

<V BLANK>

Item		Setting		Description
No.	Superimposed display	No.	Superimposed display	
800	ADD LINE	0000	OFF	This selects the mode in which the input signals are recorded on additional lines. 0: No additional line recording. 1: For 1-line recording of the input signals in the 422 mode. 2: For 1-line recording of the input signals in the 411 mode. 3: For the 1-line recording of input signals in their original form as the luminance signal. 4: For the 1-line recording of only the luminance signal after the input signals have been separated into the luminance and chrominance signals. 5: For the 1-line recording of only the chrominance signal after the input signals have been separated into the luminance and chrominance signals. 6: For the 2-line recording of input signals in their original form as the luminance signal. 7: For the 2-line recording of only the luminance signal after the input signals have been separated into the luminance and chrominance signals. 8: For the 2-line recording of only the chrominance signal after the input signals have been separated into the luminance and chrominance signals. **<Notes>** • When a setting from 1 to 8 is selected and the STOP button is pressed, operation moves to the sub screen and the recording line or lines can be selected. Press the STOP button again to return from the sub screen. • Depending on the additional line recording mode, the number of lines for recording teletext will differ.
		0001	YC422	
		0002	YC411	
		0003	Y1_B/W	
		0004	Y1_BPF	
		0005	C1	
		0006	Y2_B/W	
		0007	Y2_BPF	
		0008	C2	
Sub screen				
00	REC LINE	0000	10L	For selecting the additional line where the signals are to be recorded.
		⋮	⋮	
		0012	22L	
		0013	263L	
		0014	273L	
		⋮	⋮	
		0025	284L	
		0026	525L	
01	REC LINE2	0000	10L	For selecting the additional line where the signals are to be recorded. **<Note>** This menu item is not displayed when a setting from 1 to 5 has been selected as the additional line mode.
		⋮	⋮	
		0012	22L	
		0013	263L	
		0014	273L	
		⋮	⋮	
		0016	275L	
		⋮	⋮	
		0025	284L	
		0026	525L	

The underline on the setting item denotes the initial setting.

USER menu

<V BLANK> (continued)

Item		Setting		Description
No.	Superimposed display	No.	Superimposed display	
802	TELETEXT SEL	0000 0001	MOJI NABTS	For selecting the type of teletext signals to be recorded. 0: MOJI system 1: NABTS system
803	TELETEXT DET	0000 0001 0002	OFF AUTO MANU	This selects the method used to detect the lines in which the teletext signals are to be recorded. 0: The teletext signals are not recorded. 1: The teletext signals are automatically detected and recorded. 2: The lines in which the teletext signals are to be recorded are selected and set. **<Notes>** • When setting “1 (AUTO)” is selected, it may not be possible to record the teletext signals in all the lines depending on the setting of setup menu item No. 800 (ADD LINE). • When setting “2 (MANU)” is selected and the STOP button is pressed, operation transfers to the sub-screen, and the number of recording lines can be selected. To return from the sub-screen, press the STOP button again. • The number of lines in which the teletext signals can be recorded depends on the setting of setup menu item No. 800 (ADD LINE).
Sub screen				
00 : : : : : : : : : : : 12	REC LINE1 : : : : : : : : : : : REC LINE13	0000 0001 0002 0003 0004 0005 0006 0007 0008 0009 0010 0011 0012 0013	OFF 10&273 11&274 12&275 13&276 14&277 15&278 16&279 17&280 18&281 19&282 20&283 21&284 22	This selects the lines in which the teletext signals are to be recorded. Factory mode settings REC LINE1: OFF REC LINE2: OFF REC LINE3: OFF REC LINE4: OFF REC LINE5: OFF REC LINE6: OFF REC LINE7: OFF REC LINE8: OFF REC LINE9: OFF REC LINE10: OFF REC LINE11: OFF REC LINE12: OFF REC LINE13: OFF
804	BLANK LINE	0000 0001 0002	BLANK THRU MANU	This selects blanking ON or OFF for the vertical blanking period of the video signals. 0: Blanking is effected forcibly for all lines. 1: No blanking is effected for any of the lines. 2: Blanking ON or OFF is selected for each line. **<Note>** When setting “2 (MANU)” is selected and the STOP button is pressed, operation transfers to the sub-screen, and ON or OFF can be selected for each line. To return from the sub-screen, press the STOP button again.

The underline on the setting item denotes the initial setting.

USER menu

<V BLANK> (continued)

Item		Setting		Description
No.	Superimposed display	No.	Superimposed display	
Sub screen				
00	LINE 10&273	0000 0001	BLANK THRU	0: Blanking is forcibly effected. 1: No blanking is effected.
01	LINE 11&274	0000 0001	BLANK THRU	0: Blanking is forcibly effected. 1: No blanking is effected.
02	LINE 12&275	0000 0001	BLANK THRU	0: Blanking is forcibly effected. 1: No blanking is effected.
03	LINE 13&276	0000 0001	BLANK THRU	0: Blanking is forcibly effected. 1: No blanking is effected.
04	LINE 14&277	0000 0001	BLANK THRU	0: Blanking is forcibly effected. 1: No blanking is effected.
05	LINE 15&278	0000 0001	BLANK THRU	0: Blanking is forcibly effected. 1: No blanking is effected.
06	LINE 16&279	0000 0001	BLANK THRU	0: Blanking is forcibly effected. 1: No blanking is effected.
07	LINE 17&280	0000 0001	BLANK THRU	0: Blanking is forcibly effected. 1: No blanking is effected.
08	LINE 18&281	0000 0001	BLANK THRU	0: Blanking is forcibly effected. 1: No blanking is effected.
09	LINE 19&282	0000 0001	BLANK THRU	0: Blanking is forcibly effected. 1: No blanking is effected.
10	LINE 20&283	0000 0001	BLANK THRU	0: Blanking is forcibly effected. 1: No blanking is effected.
11	LINE 21&284	0000 0001	BLANK THRU	0: Blanking is forcibly effected. 1: No blanking is effected.

The underline on the setting item denotes the initial setting.

USER menu

<MENU>

Item		Setting		Description
No.	Superimposed display	No.	Superimposed display	
A00	LOAD	0000	USER2	This selects the user file whose contents will be loaded into USER1. 0: The USER2 file contents are loaded. 1: The USER3 file contents are loaded. 2: The USER4 file contents are loaded. 3: The USER5 file contents are loaded. **<Note>** When the SET button is pressed after loading, the setting will be stored in the memory. When the MENU button is pressed, the setting will not be changed.
		0001	USER3	
		0002	USER4	
		0003	USER5	
A01	SAVE	0000	USER2	This selects the user file into which the USER1 settings will be saved. 0: The settings are saved in USER2. 1: The settings are saved in USER3. 2: The settings are saved in USER4. 3: The settings are saved in USER5. 4: This display appears when all the user files are in the change prohibit status. **<Notes>** • User files whose status have been set to change prohibit cannot be selected. • When all the user files are in the change prohibit status, the "LOCKED" display appears and the contents cannot be saved.
		0001	USER3	
		0002	USER4	
		0003	USER5	
		0004	LOCKED	
A02	P.ON LOAD	0000	OFF	This loads the contents of the selected user file into USER1 and it starts operation with the USER1 settings when the power is turned on. 0: Operation is started with the settings of the previously set user file. 1: The contents of USER2 are loaded into USER1 and operation is started with the USER1 settings. 2: The contents of USER3 are loaded into USER1 and operation is started with the USER1 settings. 3: The contents of USER4 are loaded into USER1 and operation is started with the USER1 settings. 4: The contents of USER5 are loaded into USER1 and operation is started with the USER1 settings.
		0001	USER2	
		0002	USER3	
		0003	USER4	
		0004	USER5	
A03	MENU LOCK	0000	OFF	This selects whether to set or release the user file (USER2 – USER5) lock mode. 0: The lock is released (changes can be made). 1: The lock is set (changes are prohibited). **<Note>** The lock cannot be set for USER1.
		0001	ON	

The underline on the setting item denotes the initial setting.

<Notes>

- No. A00 (LOAD), No. A01 (SAVE) and No. A02 (P.ON LOAD) are the menu items which can be set only for USER1. They are not displayed with the USER2 – USER5 files.
- No. A03 (MENU LOCK) is the menu item which can be set only for the USER2 – USER5 files. It is not displayed with USER1.

Time code/user bit

Time code

The time code is used when the time code signal generated by the time code generator (time code signal generator) is to be recorded on the tape, its values are to be read by the time code reader (time code signal reader), and the absolute position of the tape is to be displayed in increments of hours, minutes, seconds and frames.

The time code is written in the sub-code area (data area) of the helical track. This enables insert editing to be conducted independently using the time code alone. In addition, the VTR's playback speed can be read from the stop mode to slow-motion playback up to high-speed play (approx. 100X normal speed).

The time code values are indicated using the display and superimpose functions.

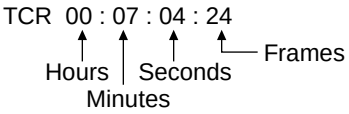

User bit

"User bit" refers to the 32-bit (8-digit) data frame among the time code signals which has been released to users. It enables operator numbers values to be recorded.
The alphanumeric characters which can be used for the user bit are the figures 0 to 9 and the letters A to F.

<Note>
Time code and user's bit control during tape play is exercised by the data recorded in the SBC area. The data recorded in this area includes the data that appears on the display or is superimposed on the TV monitor screen and the communication data that is transferred to the editing controller.

1. Setting the internal time code

1 Place the VTR in the stop mode.

2 Set the TC/CTL switch to TC.

3 Set the TC INT/EXT switch to INT. (Internal time code selected)

4 Set the REC RUN/FREE RUN switch position.
REC RUN: The time code runs at the same time as the recording proceeds.
FREE RUN: The time code runs in the same way as the time regardless of the VTR's operation.

5 Set the REGEN/PRESET switch position.
REGEN: Continuity is maintained with the recorded time code before editing.
(Detailed settings are also possible using the menu settings. See the menu items below.)
Setup menu No. 503 (TCG REGEN)
Setup menu No. 504 (REGEN MODE)
PRESET: Recording starts from the value set with the TC SET button.
<Note>
During auto editing, REGEN will be selected by the setup menu No. 504 setting even if the switch has been set to the PRESET position.

6 Set the TC SET button.
Use the TC SET button to set the start number of the time code or user bit.

1 Press the SHIFT button.
The leftmost digit flashes.

2 Press the ADJ button to change the value.
Each time the button is pressed, the number changes. The setting range is given below.
- **Time code**
  00:00:00:00 – 23:59:59:29
- **User bit**
  00 00 00 00 – FF FF FF FF

3 Repeat steps 1 and 2 to change the value.

4 When the setting of the start number is completed, press the START button. In the FREE RUN mode, the time code now starts running.

5 Proceed with the recording or editing.

2. Setting the external time code (TC switch → EXT)

1 Place the VTR in the stop mode.

2 Set the TC/CTL switch to TC.

3 Set the TC INT/EXT switch to EXT. (External time code selected)

4 Setup menu No. 505 (EXT TC SEL) can be set as follows.
LTC: The LTC signal input to the TIME CODE IN connector (XLR) on the rear jack panel is recorded as the time code.
<Note> The LTC signal must be synchronized with the video signal.
VITC: The input video signal's VITC is recorded as the time code.

1 Place the unit in the stop mode.

2 Set the TC/CTL button to TC.

3 Set the TC/UB switch to TC or UB.
TC: The time code is displayed.
UB: The user bit is displayed.
- When it is no longer possible to read the time code, it is interpolated using the CTL signal.

4 Press the PLAY button.
Playback now commences, and the time code appears on the display.
When setup menu No. 006 (SUPER) is ON, the time code value is superimposed onto the video signal from the VIDEO OUT 3 connector.

<Notes>
- When the time code signal cannot be read, the time code is automatically interpolated by the CTL signal.
  The display appears as shown below.
- The colon between the seconds and frames changes to a period when the drop frame time code is read.

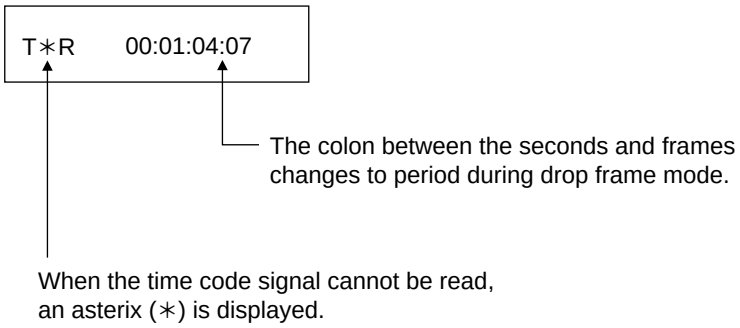

Superimpose screen

The control signals, time code, etc. are displayed using abbreviations.

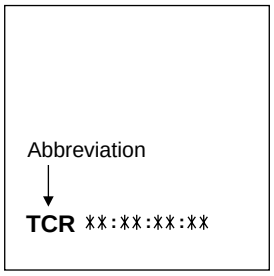

CTL = control signal
TCR = TC time code reading
UBR = TC user bit reading

TV monitor

Characters displayed

The background of characters superimposed on the display can be changed using setup menu No. 007 (CHARA TYPE).

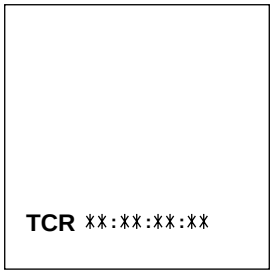

TV monitor

Display position

The position of the characters superimposed on the display can be changed using setup menus No. 001 (CHARA H-POS) and No. 002 (CHARA V-POS).

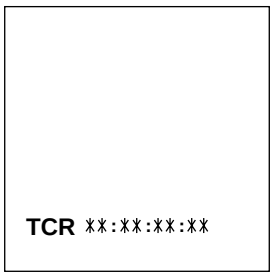

TV monitor

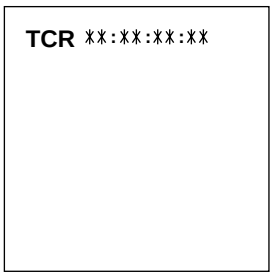

TV monitor

Operation mode

The VTR's operation mode can also be displayed using setup menu No. 003 (DISPLAY SEL).

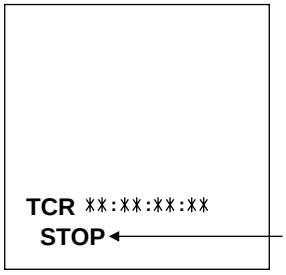

VTR operation mode

TV monitor

Servo reference

This unit automatically selects the input video signal selected by the INPUT switch, the reference video signal supplied from the REF VIDEO input connector or the internal sync signal as the servo reference signal.
When the signal is selected, the unit's mode and servo reference stand in the relationship shown in the flowchart presented below.

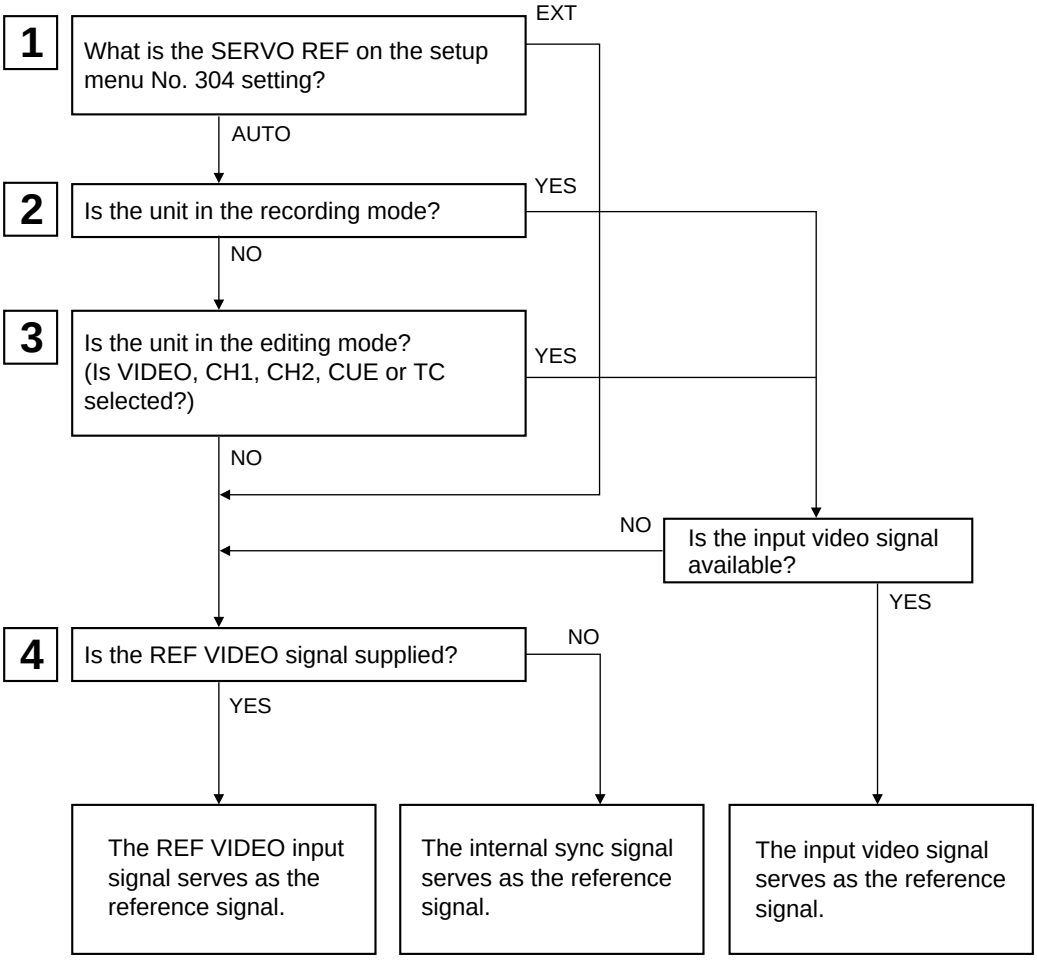

Servo reference setting tables

The servo reference signal is switched as shown in the tables below depending on the servo reference setting, deck mode and what input signal is available. When the mode is transferred to editing or recording/playback, the image may be disturbed and the transfer may be delayed if the references during playback and recording do not match.

■ During playback or special playback

SERVO REF on the setup menu No. 304 position	Input signal status		Reference signal (servo reference)
	VIDEO IN signal	REF IN signal	
AUTO	○	○	REF IN signal
	○	×	Internal sync signal
	×	○	REF IN signal
	×	×	Internal sync signal
EXT	○	○	REF IN signal
	○	×	Internal sync signal
	×	○	REF IN signal
	×	×	Internal sync signal

■ During recording or editing

SERVO REF on the setup menu No. 304 position	Input signal status		Reference signal (servo reference)
	VIDEO IN signal	REF IN signal	
AUTO	○	○	VIDEO IN signal
	○	×	VIDEO IN signal
	×	○	REF IN signal
	×	×	Internal sync signal
EXT	○	○	REF IN signal
	○	×	Internal sync signal
	×	○	REF IN signal
	×	×	Internal sync signal

"○" denotes that the signal is supplied: "×" denotes that the signal is not supplied.

Audio V Fade Function

When editing tapes, the edit point splicing selection (setup menu No. 309 and 310) information is recorded on the tape. This information is then sensed during playback, and V fade or cut processing is automatically performed for these sections. [However, only when the playback fade selection (No. 719) is AUTO.]

When the edit point splicing selection (setup menu No. 309 and 310) is CUT

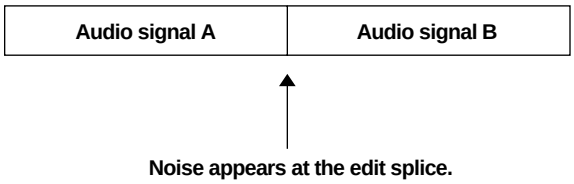

When the edit point splicing selection (setup menu No. 309 and 310) is FADE

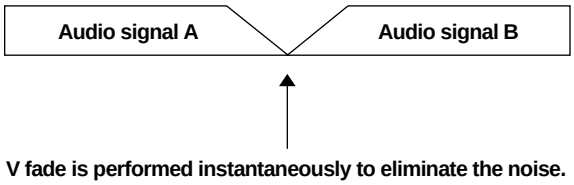

<Notes>

- When the playback fade selection (No. 719) is CUT, cut processing is performed for all splices.
- When the playback fade selection (No. 719) is FADE, V fade processing is performed for all splices.

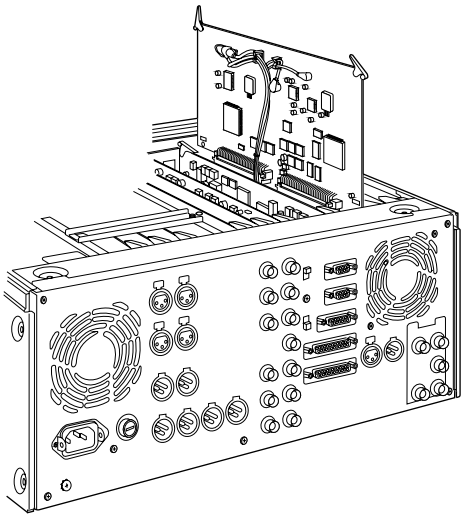

Printed circuit board	Abbr. name	Full name	Function	Factory setting
F8 board ADDA1	SW1	Audio Input Impedance SW	This sets the CH1 audio input impedance. HIGH/600Ω	HIGH
	SW41	Audio Input Impedance SW	This sets the CH2 audio input impedance. HIGH/600Ω	HIGH
H2 board CUE	SW101	Cue Input Impedance SW	This sets the CUE input impedance.	HIGH
F4 board	SW940	Component P_B/P_R Output level selector	This sets the component P_B/P_R output level when connecting with the editor. MⅡ : MⅡ level BETA : ß-CAM level	BETA

Rack mounting

The unit can be mounted into a 19-inch standard rack if the optional rack-mounting adaptors (AJ-MA75P) are used. For the installation rails, it is recommended that the rail and bracket for 18" length (model number CC3001-99-0400) of CHASSIS TRAK be used. (The complete slide rail and bracket unit is not available from Panasonic) For further details, consult with your dealer.

1 Remove the screws on the left and right sides of the unit.

2 Use the removed screw to attach the inner members of the slide rails.

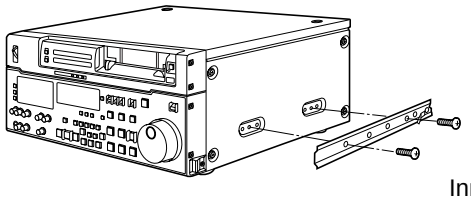

Inner member

The length of the screws used is subject to restriction. If some of the mounting screws have been lost or misplaced, use screws which are less than 0.4" long in their place. Use four screws to secure each inner member.

3 Attach the outer member brackets to the rack.
Check that the height is the same for the left and right brackets.

4 Attach the AJ-MA75P rack-mounting adaptors with included 4 screws.

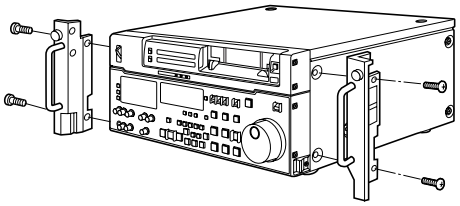

5 Remove the 4 rubber legs from the bottom of the unit, and install the unit in the rack.
After the unit has been installed, check that it moves smoothly along the rails.

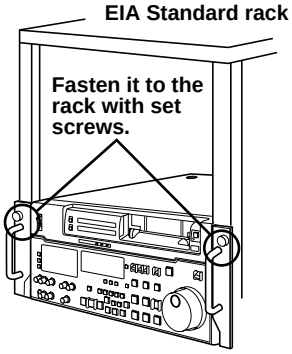

<Notes>

- Keep the temperature inside the rack to between +41°F (5°C) and +104°F (40°C).
- Bolt the rack securely to the floor so that it will not topple over when the VTR is drawn out.

Video head cleaning

This unit has an auto head cleaning function which automatically reduces the dirt on the heads. However, to further increase the unit's reliability, it is recommended that its video heads be cleaned every day.
Use the cleaning fluid designated by Panasonic.

Condensation

Condensation occurs due to the same principle involved when droplets of water form on a window pane of a heated room. It occurs when the unit or tape is moved between places where the temperature or humidity varies greatly or when, for instance:

- It is moved to a very humid place full of steam or a room immediately after it has been heated up.
- It is suddenly moved from a cold location to a hot or humid location.

When moving the unit to locations such as these, leave it standing for about 10 minutes rather than switching on the power immediately.
If condensation has formed on or in the unit, the AUTO OFF lamp lights and the cassette tape is automatically ejected.
Keep the power supplied and simply wait until the AUTO OFF lamp goes off.

Error messages

When a warning occurs in this unit, the warning lamp lights up.
Opening the DIAG menu will display the warning description on the counter display and the monitor. Also, when an abnormal operation is detected in this unit, the AUTO OFF lamp lights up and a message appears on the counter display.

DIAG menu

This display the VCR information.
VCR information includes “WARNING” information and “HOURS METER” (usage time) information. A DIAG menu appears on the monitor when the monitor is connected to the VIDEO OUT 3 connector on the connector section.

Displaying the DIAG menu

1 Press the DIAG button.
The DIAG menu screen is displayed on the monitor, and the message is displayed on the counter display.

2 The “WARNING” information and “HOURS METER” information can be switched by pressing the search buttons.

3 Press the DIAG button again to return to the original display.

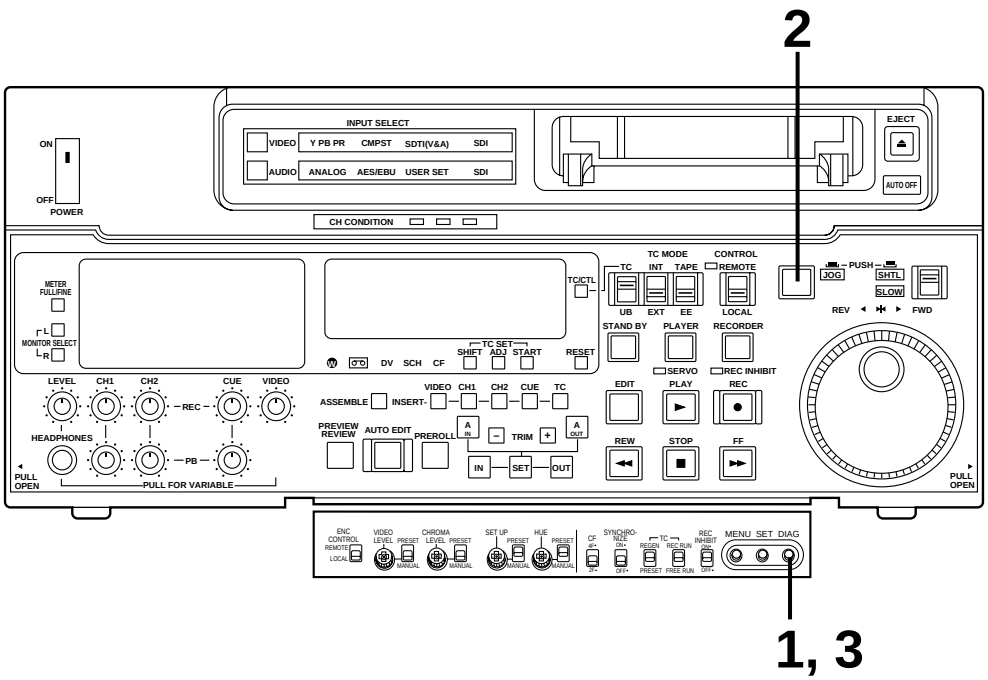

“WARNING” information display

- A warning message is displayed whenever a warning occurs (the warning lamp lights up). When warnings have not been detected, “NO WARNING” is displayed.
- When multiple warning occur, the descriptions for each warning can be checked by turning the search dial.

Displaying the “HOURS METER” information

Turn the search dial to move the cursor (∗). The description for the item where the cursor is located is shown on the counter display.

Item No.	Item	Description
H00	OPERATION	Displays the time that the power has been supplied in one-hour units.
H01	DRUM RUN	Displays the time that the drum has been rotating in one-hour units.
H02	TAPE RUN	Displays the time that the tape has been running during FF, REW, PLAY, SEARCH (JOG, VAR, SHTL), REC, and EDIT modes (except for STILL in the JOG, VAR or SHTL mode) in one-hour units.
H03	THREADING	The number of times for threading/unthreading is displayed in single units.
H11	DRUM RUN r	Displays the time that the drum has been rotating in one-hour units. (Can be reset)
H12	TAPE RUN r	Displays the time that the tape has been running during FF, REW, PLAY, SEARCH (JOG, VAR, SHTL), REC, and EDIT modes (except for STILL in the JOG, VAR or SHTL mode) in one-hour units. (Can be reset)
H13	THREADING r	The number of times for threading/unthreading is displayed in single units. (Can be reset)
H30	POWER ON	This displays the number of times the power has been turned on in 1-time increments.

<Notes>

- The resettable items in the “HOURS METER” information are reset by the shop when performing maintenance or other work.
- The search buttons and the search dial cannot be operated while the DIAG menu is displayed.

If “T&S&M” is selected in the setup menu No. 003 (DISPLAY SEL), a message appears in the mode display whenever a warning or error occurs. When multiple events occur, the event with the highest priority is displayed.

Priority	Display	Description
High ↑ Low	Error messages (See error message table)	When an abnormal operation is detected in this unit, the AUTO OFF lamp lights up and an error message is displayed.
	INT SG	If “BB” in No. 601 (INT BB SIG) in the setup menu is selected or when ON has been selected as the setup menu No. 722 (INT SG) setting, pressing the REC button or the EDIT button (E to E mode) will display “INT SG” for the first two seconds. This is also displayed for the first two seconds when starting editing.
	NO INPUT	If there is no input signal (except for analog audio) to the connector selected using the INPUT SELECT switch, pressing the REC button or the EDIT button (E to E mode) will display “NO INPUT” for the first two seconds. This is also displayed for the first two seconds when starting editing.
	Warning messages (See error message table)	When a warning occurs in this unit, the warning lamp lights up and a warning message is displayed. When multiple warnings occur, the warning with the highest priority is displayed.

Warning messages

Priority	Monitor display	Description	VTR operation
High ↑ Low	FAN STOP	This is displayed when the fan motor stops.	Operation continues
	SERVO NOT LOCKED	This is displayed when the servo is not locked for three or more seconds during playback, recording, or editing.	Operation continues
	LOW RF	This is displayed when envelope levels approximately 1/3 that of normal levels are detected for more than one second during playback, recording, or editing.	Operation continues
	HIGH ERROR RATE	This is displayed when the error rate increases and correction/interpolation is performed on either the video or audio playback signal.	Operation continues
	OVER RECORDING	When voice-over editing is performed using the internal audio memory, this message appears if the duration of the signals recorded in the memory exceeds 20 seconds.	Operation continues

Table of AUTO OFF Error messages

Counter display	Monitor display	Description	VTR operation (Restart condition)
CAP ROTATE TOO SLOW	**CAP ROTA TOO SLOW**	If the capstan motor speed is abnormally low, the AUTO OFF lamp lights, and the message display flashes.	STOP (POWER OFF→ON)
CAP TENSION ERROR	**CAP TENSION ERROR**	If an abnormal tension at the supply side is detected in the capstan mode, the AUTO OFF lamp lights, and the message display flashes.	STOP (POWER OFF→ON)
DEW	**DEW**	If condensation is detected, the AUTO OFF lamp lights, the message display flashes, and the VTR is transferred to the eject mode. After the tape is ejected, the drum rotates in order to eliminate the condensation. When the condensation has been eliminated, the AUTO OFF lamp and message display go off, and the VTR can be used. **<Notes>** 1) If condensation is detected in the eject mode, the drum starts rotating as soon as it is detected. 2) If condensation is detected when the cassette has been inserted, the drum rotation is stopped, and after the tape is ejected, the drum starts rotating.	EJECT (Normal operation resumed after condensation is eliminated)
DRUM ROTATE TOO FAST	**DRUM ROTA TOO FAST**	If the cylinder motor speed is abnormally high, the AUTO OFF lamp lights, and the message display flashes.	STOP (POWER OFF→ON)
DRUM ROTATE TOO SLOW	**DRUM ROTA TOO SLOW**	If the cylinder motor speed is abnormally low, the AUTO OFF lamp lights, and the message display flashes.	STOP (POWER OFF→ON)
E-FF	**E-FF**	If the tape start and tape end are detected simultaneously either during or after loading, the AUTO OFF lamp lights, and the message display flashes.	STOP (POWER OFF→ON)
FRONT LOAD ERROR	**FRONT LOAD ERROR**	The AUTO OFF lamp lights and the message display flashes when the take-up reel has been rotating idly for a fixed period of time while the start/end processing operation during loading (half position) is being performed or when it was impossible to eject the tape.	STOP (POWER OFF→ON)
FRONT LOAD MOTOR	**FRONT LOAD MOTOR**	If the cassette does not move up even when 6 seconds have elapsed since the VTR was transferred to the eject mode, the AUTO OFF lamp lights, and the message display flashes. **<Note>** If the cassette does not move down inside the machine even when 6 seconds have elapsed since the cassette was inserted, the VTR is transferred to the eject mode.	STOP (POWER OFF→ON)
LOADING MOTOR	**LOADING MOTOR**	When the unloading operation is not completed within 6 seconds, the AUTO OFF lamp lights, and the message display flashes. **<Note>** When the loading operation is not completed within 6 seconds, the VTR is transferred to the eject (unloading) mode.	STOP (POWER OFF→ON)

Counter display	Monitor display	Description	VTR operation (Restart condition)
REEL DIR UNMATCH	**REEL DIR UNMATCH**	If the reel motor at the take-up side is running in the reverse direction, the AUTO OFF lamp lights, and the message display flashes.	STOP (POWER OFF→ON)
REEL TENSION ERROR	**REEL TENSION ERROR**	If an abnormal tension at the supply side is detected in the reel mode, the AUTO OFF lamp lights, and the message display flashes.	STOP (POWER OFF→ON)
SERVO COMM ERROR	**SERVO COMM ERROR**	When the servo microcomputer does not follow the instructions of the system control microcomputer even when 10 seconds have elapsed, the AUTO OFF lamp lights, and the message display flashes.	STOP (POWER OFF→ON)
SERVO CONTROL ERROR	**SERVO CONTROL ERR**	When there is no response from the servo microcomputer for 1 or more seconds, the AUTO OFF lamp lights, and the message display flashes.	STOP (POWER OFF→ON)
SERVO ERROR	**SERVO ERROR**	When only the servo microcomputer was reset in an instantaneous power failure, the AUTO OFF lamp lights, and the message display flashes.	STOP (POWER OFF→ON)
S-FF/REW TIMEOVER	**S-FF/REW TIMEOVER**	If the start/end processing operation is not completed, the AUTO OFF lamp lights, and the message display flashes.	STOP (POWER OFF→ON)
S REEL ROTA TOO FAST	**S REEL TOO FAST**	If the supply reel motor should rotate at an abnormally fast rate, the AUTO OFF lamp lights, and the message display flashes.	STOP (POWER OFF→ON)
S REEL TORQUE ERROR	**S REEL TORQUE ERR**	If an abnormal torque applied to the supply reel motor is detected, the AUTO OFF lamp lights, and the message display flashes.	STOP (POWER OFF→ON)
T REEL ROTA TOO FAST	**T REEL TOO FAST**	If the take-up reel motor should rotate at an abnormally fast rate, the AUTO OFF lamp lights, and the message display flashes.	STOP (POWER OFF→ON)
T REEL TORQUE ERROR	**T REEL TORQUE ERR**	If an abnormal torque applied to the take-up reel motor is detected, the AUTO OFF lamp lights, and the message display flashes.	STOP (POWER OFF→ON)
UNLOAD ERROR	**UNLOAD ERROR**	If the tape has not been wound up during unloading, the AUTO OFF lamp lights, and the message display flashes.	STOP (POWER OFF→ON)
WINDUP ERROR	**WINDUP ERROR**	If the tape was not wound up at less than the standard speed (1×) when the total tape amount was not detected or if abnormal tape slack or tension was detected at speeds above 1× after the total tape amount was detected, the AUTO OFF lamp lights, and the message display flashes.	STOP (POWER OFF→ON)
WINDUP REEL NOT ROTA	**W-UP REEL NOT ROTA**	If, after the cassette has been inserted, the tape take-up reel has not wound up the tape at the standard speed (1×) or faster while the total tape amount is not detected and while the tape is traveling in the forward or reverse direction, the AUTO OFF lamp lights, and the message display flashes.	STOP (POWER OFF→ON)

RS-232C interface

1. Introduction

(1) The VTR can be operated by commands when the RS-232C interface is used.
(See command table on pages 95 – 97.)

(2) Conditions for acknowledging commands from RS-232C interface
The front panel REMOTE/LOCAL switch must be at REMOTE.
The setup menu item No. 204 "RS232C SEL" must be ON.

If the above conditions are not met, [ACK] + [STX]ER001[EXT] is returned to the external unit.
Whether the [ACK] code is returned depends on the setting which has been selected for setup menu item No. 209 "RETURN ACK".

2. Hardware specifications

External interface specifications

1) Connector specifications

Connector: D-SUB 25-pin (crossover cable supported)

Pin No.	Signal	Circuit name	Description
1	FG	Protective ground	Frame ground
2	RXD	Received data	Data is sent to PC.
3	TXD	Transmitted data	Data is received from PC.
4	CTS	Clear to send	Shorted with pin 5.
5	RTS	Request to send	Shorted with pin 4.
6	DTR	Data terminal ready	No processing
7	SG	Signal ground	Signal ground
20	DSR	Data set ready	+ voltage output after communication enable status

2) Example of connection with controller (PC)

■ **Using crossover cable with D-SUB 25-pin connectors**

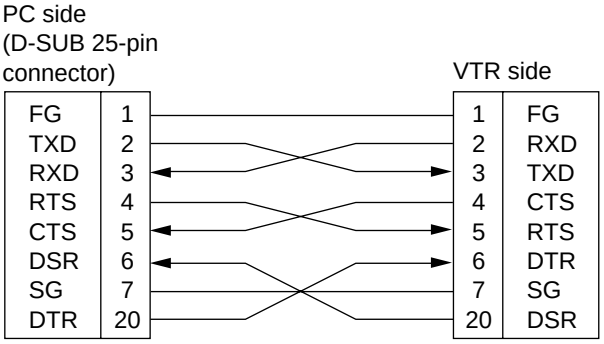

■ **Using crossover cable with D-SUB 9-pin and 25-pin connectors**

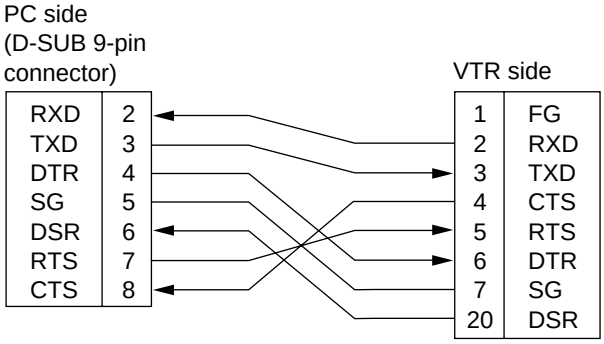

3. Software specifications

Protocol

1) Communication parameters

Communication system	Asynchronous, full duplex
Communication speed	300/600/1200/2400/4800/9600
Bit length	7 bit/8 bit
Stop bit	1 bit/2 bit
Parity bit	NONE/ODD/EVEN
ACK code	ACK code returned/ACK code not returned **<Note>** The ACK code is what is returned from the VTR to the controller when data has been successfully sent from the controller.

The underlining indicates the factory settings.

Any changes to the settings can be made using the setup menu items listed below.

Communication parameter	Setup menu item
Communication speed	No. 205 BAUD RATE
Bit length	No. 206 DATA LENGTH
Stop bit	No. 207 STOP BIT
Parity bit	No. 208 PARITY
ACK code	No. 209 RETURN ACK

2) Send format [controller (PC) → VTR]

■ **Data format**

[STX] [command] [:] [data] [ETX]
02h XX XX XX 3Ah XX-XX 03h ←(ASCII code: symbols, numbers upper-case letters)

20h<XX<7Fh

- [command]: Command identifier; a 3-byte identifier (ASCII code: symbols, numbers, upper-case letters) is sent as the command.
- [:]: This code serves as a delimiter between the command and data.
- [data]: Data (ASCII code: symbols, numbers, upper-case letters) can be added in the number of bytes required.

■ **Outline of send procedure from controller**

1. The send command starts with STX (start of text = 02h). The command is then identified by COMMAND which follows and the data is added as required.
   The format ends with ETX (end of text = 03h).
2. When a different command is to be sent, a response is awaited from the VTR, and then the command is sent. (See page 94.)
3. If STX is sent again before ETX is sent, the receive data buffer inside the VTR is cleared. A command error is returned to the controller, and the data is newly processed with STX which was received again at the head.

3) Return format [VTR → controller (PC)]

The following responses are made to the command. If necessary, more than one response is made.

■ When the communication has terminated normally

1. The receive completion message is returned.
   [ACK]
   06h

2. The execution completion message is returned.
   [STX] [command] [data] [ETX]
   02h XX XX XX XX-XX 03h

• [command]: This is the message (data) which is returned or the execution completion message identifier.
• [data]: This is the data to be returned. It can be omitted.

Example:	Send command		Return message (data)
	[STX] OPL [ETX]	→	[ACK] [STX] OPL [ETX]

■ When the communication has terminated abnormally

[NACK]
15h

■ When processing is not possible due to incorrect data or trouble in the VTR

1. The receive completion message is returned.
   [ACK]
   06h

2. An error code is returned.
   [STX] E R N_1 N_2 N_3 [ETX]
   02h Error code 03h

4. Error code table

ER001: Invalid command
- Unsupported command received.
- Error in command execution

ER002: Parameter error
ER102: VTR mode error (front loading motor)
ER103: VTR mode error (loading motor)
ER104: VTR mode error (drum, capstan system)
ER105: VTR mode error (reel system)
ER106: VTR mode error (tension system)
ER108: VTR dew error
ER1FF: VTR system error

5. Command table

(1) Commands relating to operation control

<Notes>

- As for the return (completion) message, [ACK] is first returned when data is received, and the execution message is subsequently returned. It is only the execution message which is listed in this table.
- In the case of commands not listed in the table, ER001 (invalid command) is returned after [ACK] has been returned.

VTR operation	Send command	Return (completion) message	Supplementary notes
STOP	[STX] OSP [ETX]	[STX] OSP [ETX]	This command is for stopping the tape travel. The resulting output picture and sound statuses differ according to the settings selected for the setup menu No. 105 (AUTO EE SEL).
EJECT	[STX] OEJ [ETX]	[STX] OEJ [ETX]	This command is for ejecting the cassette tape. The resulting output picture and sound statuses differ according to the settings selected for the setup menu No. 105 (AUTO EE SEL).
PLAY	[STX] OPL [ETX]	[STX] OPL [ETX]	This command is for starting playback.
REWIND	[STX] ORW [ETX]	[STX] ORW [ETX]	This command is for rewinding the tape. The resulting output picture and sound statuses differ according to the settings selected for the setup menu No. 105 (AUTO EE SEL). The maximum tape speed differs according to the setting selected for setup menu No. 102 (FF. REW MAX).
FAST FORWARD	[STX] OFF [ETX]	[STX] OFF [ETX]	This command is for fast forwarding the tape. The resulting output picture and sound statuses differ according to the settings selected for the setup menu No. 105 (AUTO EE SEL). The maximum tape speed differs according to the setting selected for setup menu No. 102 (FF. REW MAX).
REC	[STX] ORC [ETX]	[STX] ORC [ETX]	This command is for starting the recording.
SHTL FORWARD	[STX] OSF:data [ETX]	[STX] OSF [ETX]	This is the forward direction shuttle command.
	data = n: speed data 0: STILL 1: ×0.03 (DVCPRO), ×0.03 (DV, DVCAM) 2: ×0.1 (DVCPRO), ×0.1 (DV, DVCAM) 3: ×0.2 (DVCPRO), ×0.3 (DV, DVCAM) 4: ×0.5 (DVCPRO), ×0.5 (DV, DVCAM) 5: ×1 (DVCPRO), ×1 (DV, DVCAM) 6: ×1.85 (DVCPRO), ×1.85 (DV, DVCAM) 7: ×4.1 (DVCPRO), ×3.1 (DV, DVCAM) 8: ×9.5 (DVCPRO), ×9.5 (DV, DVCAM) 9: ×16 (DVCPRO), ×16 (DV, DVCAM) : This speed differs according to the setting selected for setup menu No. 101 (SHTL MAX). A: ×32 (DVCPRO), ×32 (DV, DVCAM) : This speed differs according to the setting selected for setup menu No. 101 (SHTL MAX).		

VTR operation	Send command	Return (completion) message	Supplementary notes
SHTL REVERSE	[STX] OSR:data [ETX]	[STX] OSR [ETX]	This is the reverse direction shuttle command.
	data = n: speed data 0: STILL 1: ×0.03 (DVCPRO), ×0.03 (DV, DVCAM) 2: ×0.1 (DVCPRO), ×0.1 (DV, DVCAM) 3: ×0.2 (DVCPRO), ×0.3 (DV, DVCAM) 4: ×0.43 (DVCPRO), ×0.5 (DV, DVCAM) 5: ×1 (DVCPRO), ×1 (DV, DVCAM) 6: ×1.85 (DVCPRO), ×1.85 (DV, DVCAM) 7: ×4.1 (DVCPRO), ×3.1 (DV, DVCAM) 8: ×9.5 (DVCPRO), ×9.5 (DV, DVCAM) 9: ×16 (DVCPRO), ×16 (DV, DVCAM) : This speed differs according to the setting selected for setup menu No. 101 (SHTL MAX). A: ×32 (DVCPRO), ×32 (DV, DVCAM) : This speed differs according to the setting selected for setup menu No. 101 (SHTL MAX).		
STANDBY OFF	[STX] OBF [ETX]	[STX] OBF [ETX]	This command is setting the VTR to standby OFF.
STANDBY ON	[STX] OBN [ETX]	[STX] OBN [ETX]	This command is setting the VTR to standby ON.

(2) Commands relating to inquiries

<Notes>

- As for the return (completion) message, [ACK] is first returned when data is received, and the execution message is subsequently returned. It is only the execution message which is listed in this table.
- In the case of commands not listed in the table, ER001 (invalid command) is returned after [ACK] has been returned.

VTR operation	Send command	Return (completion) message	Supplementary notes
CTL/TC DATA REQUEST	[STX] QCD [ETX]	[STX] CD data [ETX]	This command is for inquiring about the counter value.
		data = f w gh mm ss ff f = F w = S gh = CTL: g = SP (20h): for a plus display – (2Dh): for a minus display h = 0 – 9: hours TC: gh = 00 – 23: hours mm = 00 – 59: minutes ss = 00 – 59: seconds ff = 00 – 29: frames	CTL or TC is returned, whichever corresponds to the front display mode.
STATUS REQUEST	[STX] QOP [ETX]	[STX] xxx [ETX]	This command is for inquiring about the VTR's operation mode.
		xxx = OEJ: EJECT OFF: FAST FORWARD OPL: PLAY ORC: REC ORW: REWIND OSP: STOP (including the STANDBY ON) SRS: (IN/OUT) PREROLL OBF: STANDBY OFF OSF: SHTL FORWARD OSR: SHTL REVERSE OJG: JOG FORWARD/REVERSE OSW: VAR FORWARD/REVERSE EAE: AUTO EDIT EON: EDIT ON (MANUAL EDIT) EPV: PREVIEW ERV: REVIEW	
ID (VTR No.) REQUEST	[STX] QID [ETX]	[STX] data [ETX]	This command is for inquiring about the VTR used.
		data = AJ-D850	

(3) Microsoft QuickBASIC sample program

```
CLS
STX$ = CHR$(&H2): ETX$ = CHR$ (&H3): NAK$ = CHR$(15): ACK$ = CHR$(&H6)
PRINT "*** RS-232C COMMUNICATION SAMPLE PROGRAM ***"
PRINT "Type Command 'QUIT' to quit."
PRINT

REM *** Communication Port Initial & Open ***
REM Port 1,9600Bps,No parity,8 bit data,1 stop bit
OPEN "COM1:9600,N,8,1" FOR RANDOM AS #1 LEN = 256

REM *** Input Command & Send Command ***
SendCmd:
INPUT "Input Command ="; SEND$
IF SEND$ = "QUIT" THEN GOTO ProgEnd
PRINT #1, STX$ + SEND$ + ETX$

REM *** Wait for Receive Command ***
WHILE LOC(1) = 0
        WAITKEY$ = INKEY$
        IF WAITKEY$ = "Q" THEN PRINT "*** Quit ***": GOTO ProgEnd
WEND

REM *** Receive Command ***
RecvCmd:
RECV$ = INPUT$(1, #1)
IF RECV$ = STX$ THEN RECV$ = "[Stx]"
IF RECV$ = ACK$ THEN RECV$ = "[Ack]"
IF RECV$ = NAK$ THEN RECV$ = "[Nak]"
IF RECV$ = ETX$ THEN BUFFER$ = BUFFER$ + "[Etx]": GOTO DispOut
BUFFER$ = BUFFER$ + RECV$
GOTO RecvCmd

REM *** Output Receive Command ***
DispOut:
PRINT "Receive Command ="; BUFFER$
PRINT
BUFFER$ = ""
GOTO SendCmd

REM *** End Program ***
ProgEnd:
CLOSE
END
```

MICROSOFT QUICKBASIC is a registered trade mark of Microsoft Corporation.

Connector signals

VIDEO IN

SERIAL IN (DIGITAL)	BNC × 2	Active through (Option)
Y, P_B, P_R (ANALOG)	BNC × 3	
VIDEO IN	BNC × 2	Loop-through, 75Ω termination switch provided
REF VIDEO IN	BNC × 2	Loop-through, 75Ω termination switch provided

VIDEO OUT

SERIAL OUT (DIGITAL)	BNC × 3	(Option)
Y, P_B, P_R (ANALOG)	BNC × 3	
VIDEO OUT	BNC × 3	

AUDIO IN

SERIAL IN (DIGITAL)	BNC × 2	(Option)
AUDIO IN (DIGITAL)	XLR × 2	CH1/CH2, AES/EBU format
AUDIO IN (ANALOG)	XLR × 2	CH1, CH2
CUE IN	XLR × 1	
TIME CODE IN	XLR × 1	

Pin No.	Signal
1	GND
2	HOT
3	COLD

AUDIO OUT

SERIAL OUT (DIGITAL)	BNC × 3	(Option)
AUDIO OUT (DIGITAL)	XLR × 2	CH1/CH2, AES/EBU format
AUDIO OUT (ANALOG)	XLR × 2	CH1, CH2
CUE OUT	XLR × 1	
TIME CODE OUT	XLR × 1	
MONITOR OUT	XLR × 2	L (CH1)/R (CH2)
HEADPHONES (front)	Mini-jack	

RS-422A REMOTE (9P)

REMOTE IN/OUT

Pin No.	Signal	Pin No.	Signal	Pin No.	Signal
1	FRAME GROUND	4	RECEIVE COMMON	7	TRANSMIT B
2	TRANSMIT A	5	————	8	RECEIVE A
3	RECEIVE B	6	TRANSMIT COMMON	9	FRAME GROUND

REMOTE OUT

Pin No.	Signal	Pin No.	Signal	Pin No.	Signal
1	FRAME GROUND	4	TRANSMIT COMMON	7	RECEIVE B
2	RECEIVE A	5	————	8	TRANSMIT A
3	TRANSMIT B	6	RECEIVE COMMON	9	FRAME GROUND

Connector signals

PARALLEL REMOTE (25P)

Pin No.	Signal	Pin No.	Signal	Pin No.	Signal
1	PLAY COMMAND	10	————	19	STAND BY ON STATUS
2	STOP COMMAND	11	————	20	PREROLL STATUS
3	FF COMMAND	12	≥10V, MAX 300mA	21	SERVO LOCK STATUS
4	REW COMMAND	13	PLAY STATUS	22	OPERATION ENABLE STATUS
5	REC COMMAND	14	STOP STATUS	23	————
6	EJECT COMMAND	15	FF STATUS	24	————
7	STAND BY COMMAND	16	REW STATUS	25	GND
8	PREROLL COMMAND	17	REC STATUS		
9	IN SET COMMAND	18	EJECT STATUS		

<Notes>

• COMMAND pins: TTL level, active low, ≥100ms edge electrical signal.
• STATUS pins: open collector, sink current 6 mA

RS-232C REMOTE (25-pin D-SUB crossover cable supported)

Pin No.	Abbreviation	Circuit	Description
1	FRAME GROUND	Protective ground	Frame ground
2	RxD	Received data	Sends data to the PC.
3	TxD	Transmitted data	Receives data from the PC.
4	CTS	Clear to send	Shorted with pin 5.
5	RTS	Request to send	Shorted with pin 4.
6	DTR	Data terminal ready	No processing
7	GND	Signal ground	Signal ground
20	DSR	Data set ready	Positive power output after communication enable status

ENCODER REMOTE (15P)

Pin No.	Signal	Pin No.	Signal	Pin No.	Signal
1	————	6	SYSTEM H 0	11	RET GND
2	SET UP	7	SYS.SC COARSE (2)	12	————
3	C LEVEL	8	–12V	13	————
4	GND	9	HUE	14	SYS.SC FINE
5	+12V	10	VIDEO LEVEL	15	SYS.SC COARSE (1)

Specifications

GENERAL

Power supply:	AC 120 V, 50 – 60 Hz
Power consumption:	210 W

Operating ambient temperature: 41°F to 104°F (5°C to 40°C)
Operating ambient humidity: 10% to 90% (no condensation)
Weight: 36.96 lbs (16.8 kg)
Dimensions (W × H × D): 16-3/4 × 6-15/16 × 16-3/8 inches
Recording format: DVCPRO format
Recording tracks: Digital video
Time code; Recorded in sub-code area
Digital audio; 2 channels
Cue Signal; 1 track
Control (CTL); 1 track
Tape speed: 33.820 mm/sec
Recording time: 184 minutes (with AJ-5P92LP)
66 minutes (with AJ-P66MP)
Tape: 1/4-inch thin magnetic layer metal tape
FF/REW time: Less than 3 minutes (with AJ-5P92LP)
Less than 2 minutes (with AJ-P66MP)
Editing accuracy: ±0 frame (using time code)
Tape timer accuracy: ±1 frame (using continuous CTL signal)
Servo lock time: Less than 0.5 sec.
(color framing/ standby ON)

VIDEO

(Digital video)

Sampling frequencies: Y; 13.5 MHz/P_B, P_R; 3.375 MHz
Quantizing: 8 bits
Error correction: Reed-Solomon product code

(Digital IN/analog component OUT)

Video bandwidth: Y; 30 Hz to 5.5 MHz (±0.5 dB)
5.75 MHz (–2 dB)
P_B, P_R; 30 Hz to 1.3 MHz (±1 dB)
1.5 MHz (–5 dB) typ.
S/N ratio: Better than 60 dB
K factor: Less than 1%

(Analog component IN/component OUT)

Video bandwidth: Y; 30 Hz to 5.5 MHz (±1 dB)
5.75 MHz (–3 dB)
P_B, P_R; 30 Hz to 1.3 MHz (±1 dB)
1.5 MHz (–6 dB) typ.
S/N ratio: Better than 55 dB
K factor: Less than 1%

(Analog composite IN/composite OUT)

Video bandwidth: Y; 30 Hz to 4.5 MHz (±1 dB)
DG: Less than 4%
DP: Less than 3°
Y/C delay: Better than 20 nsec
K factor: Less than 2%

(Video input connector)

Analog component input: BNC×3 (Y, P_B, P_R)
Y; 1.0 Vp-p, 75Ω
P_B, P_R; 0.486/0.7 Vp-p switchable, 75Ω
(75% color bar, 7.5% setup)
Analog composite input: BNC×2, loop-through, 75Ω on/off
Reference input: Analog composite
BNC×2, loop-through, 75Ω on/off
Serial digital component input (option): Complies with SMPTE 259M-C standard, BNC×2, active through

(Video output connector)

Analog component output: BNC×3 (Y, P_B, P_R)
Y; 1.0 Vp-p, 75Ω
P_B, P_R; 0.486/0.7 Vp-p switchable, 75Ω
(75% color bar, 7.5% setup)
Analog composite output: BNC×3
Video1/video2/video3 (superimpose on/off)
Serial digital component output (option): Complies with SMPTE 259M-C standard, BNC×3

(Video signals adjustment)

Composite video input signal: ±3 dB
Video output gain: ±3 dB
Video output chroma gain: ±3 dB
Video output hue: ±30°
Video output setup: ±15 IRE
Video output sync phase: ±15 µsec
Video output SC phase: ±180°
Video output Y/C delay: ±300 nsec

AUDIO

(Digital audio)

Sampling frequencies: 48 kHz
Quantizing: 16 bits
Frequency response: 20 Hz to 20 kHz ±1 dB
Dynamic range: Better than 90 dB (1 kHz, emphasis OFF, "A" weighted)
Distortion: Less than 0.05% (1 kHz, emphasis OFF, standard level)
Crosstalk: Less than –80 dB (1 kHz, between 2 channels)
Wow & flutter: Below measurable limit
Headroom: 20 dB
Emphasis: T1=50 µsec/T2=15 µsec (on/off selectable)

(Cue track)

Frequency response: 300 Hz to 6 kHz ±3 dB

(Audio input connector)

Analog input (CH1/CH2): XLR×2, 600Ω/high impedance selectable, +4/0/–20 dBu
Digital input (CH1/CH2): XLR×1, AES/EBU format
Serial digital input (option): Complies with SMPTE 259M-C, 272M standard (BNC, 75Ω)
Cue track input: XLR×1, 600Ω/high impedance selectable, +4/0/–20/–60 dBu

(Audio output connector)

Analog output (CH1/CH2): XLR×2, low impedance, +4/0/–20 dBu
Digital output (CH1/CH2): XLR×1, AES/EBU format
Serial digital output (option): Complies with SMPTE 259M-C, 272M standard (BNC, 75Ω)
Cue track output: XLR×1, low impedance, +4/0/–20 dBu
Monitor output: XLR×2, low impedance, +4/0/–20 dBu
Headphones: Variable level, mini-jack, 8Ω

Other input/output connector

Time code input: XLR×1, 0.5 to 8 Vp-p
Time code output: XLR×1, 2.0 Vp-p
RS-422A input/output: D-sub 9-pin, RS-422A interface
RS-422A output: D-sub 9-pin, RS-422A interface
RS-232C: D-sub 25-pin, RS-232C interface
Parallel input/output: D-sub 25-pin
Encoder remote: D-sub 15-pin

Weight and dimensions shown are approximately.
Specifications are subject to change without notice.

Panasonic

PANASONIC BROADCAST & DIGITAL SYSTEMS COMPANY
DIVISION OF MATSUSHITA ELECTRIC CORPORATION OF AMERICA

Executive Office:
3330 Cahuenga Blvd W., Los Angeles, CA 90068 (323) 436-3500
EASTERN ZONE:
One Panasonic Way 4E-7, Secaucus, NJ 07094 (201) 348-7621
Mid-Atlantic/New England:
One Panasonic Way 4E-7, Secaucus, NJ 07094 (201) 348-7621
Southeast Region:
1225 Northbrook Parkway, Ste 1-160 Suwanee, GA 30024 (770) 338-6835
Central Region:
1707 N Randall Road E1-C-1, Elgin, IL 60123 (847) 468-5200
WESTERN ZONE:
3330 Cahuenga Blvd W., Los Angeles, CA 90068 (323) 436-3500
Dallas Region:
6226 Abington Way, Houston, TX 77008 (713) 802-2726
No. CA/Northwest Region:
5870 Stoneridge, #3, Pleasanton, CA 94588 (925) 416-5108
Government Marketing Department:
52 West Gude Drive, Rockville, MD 20850 (301) 738-3840

PARTS INFORMATION & ORDERING:
9:00 a.m. – 5:00 p.m. (EST) (800) 334-4881/24 Hr. Fax (800) 334-4880
TECHNICAL SUPPORT:
Emergency 24 Hour Parts & Service (800) 222-0741
TRAINING INFORMATION:
Digital System Products - (201) 392-6852

Panasonic Canada Inc.
5770 Ambler Drive, Mississauga, Ontario L4W 2T3 (905) 624-5010

Panasonic de Mexico S.A. de C.V.
Av angel Urraza Num. 1209 Col. de Valle 03100 Mexico, D.F. (52) 1 951 2127

Printed in Japan
VQT7281

S0299H100 Ⓐ **P**

AUDIO OVERALL BLOCK DIAGRAM

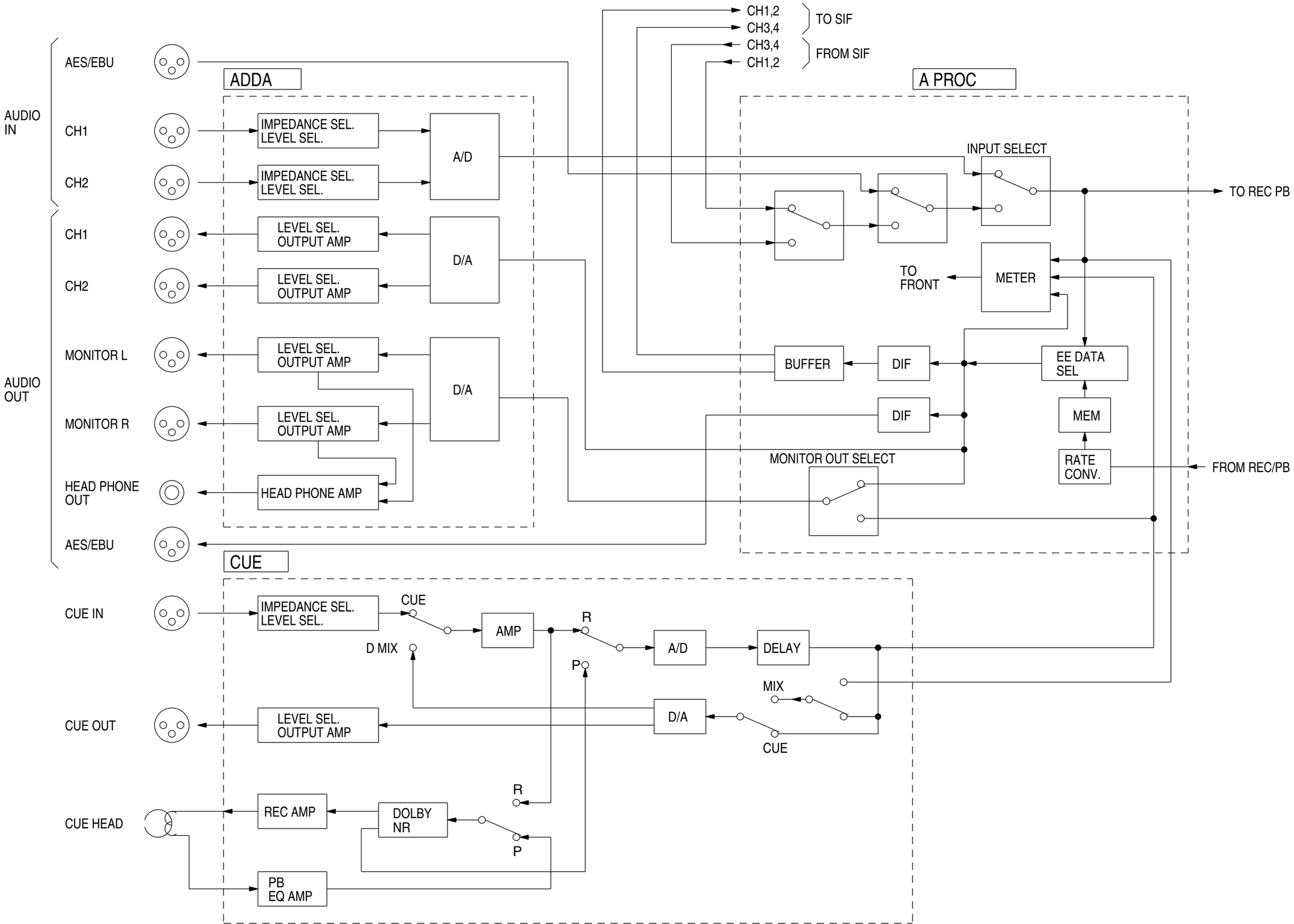

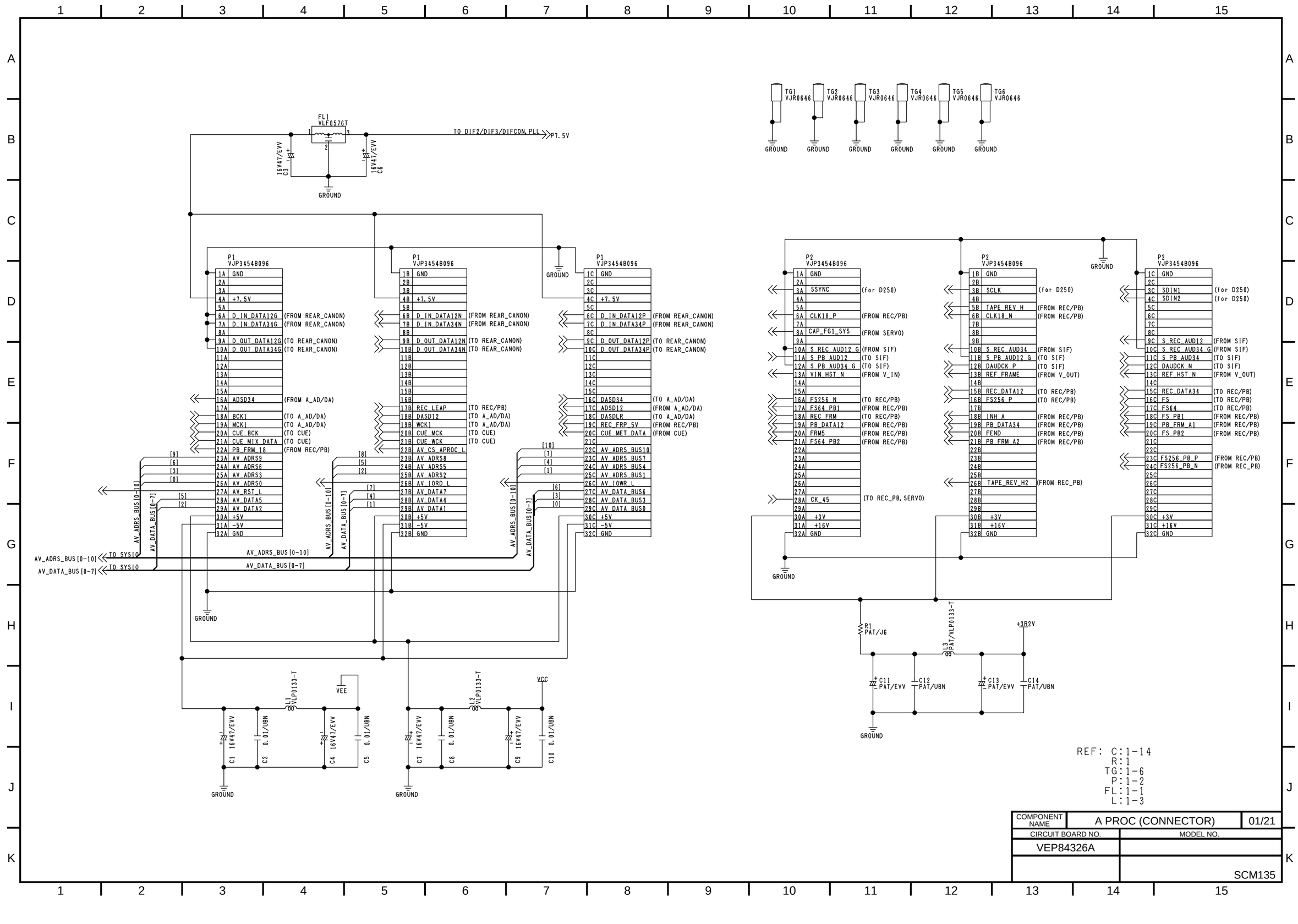

REF: C:1-14
R:1
TG:1-6
P:1-2
FL:1-1
L:1-3

COMPONENT NAME	A PROC (CONNECTOR)	01/21
CIRCUIT BOARD NO.	MODEL NO.	
VEP84326A		
		SCM135

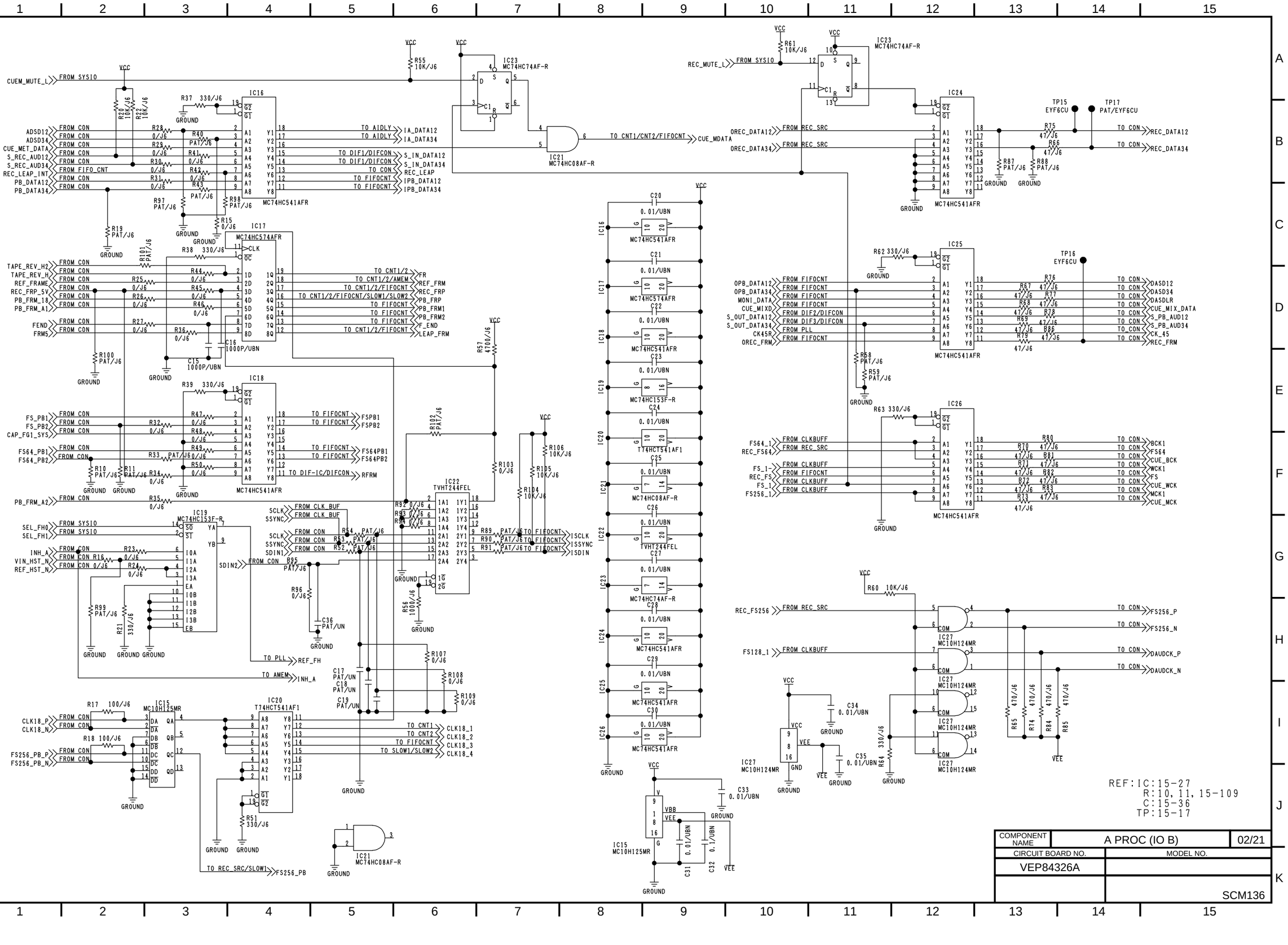
CUEM_MUTE_L
REC_MUTE_L
IC16
IC17
IC18
IC19
IC20
IC21
IC22
IC23
IC24
IC25
IC26
IC27
MC74HC541AFR
MC74HC574AFR
MC74HC153F-R
MC74HC08AF-R
MC74HC74AF-R
TVHT244FEL
T74HCT541AF1
MC10H125MR
MC10H124MR
TO CNT1/CNT2/FIFOCNT
CUE_MDATA
TO CNT1/2
TO CNT1/2/AMEM
TO CNT1/2/FIFOCNT
TO CNT1/2/FIFOCNT/SLOW1/SLOW2
TO FIFOCNT
TO DIF1/DIFCON
TO DIF-IC/DIFCON
TO AIDLY
TO PLL
TO AMEM
TO REC_SRC/SLOW1
TO CNT1
TO CNT2
TO SLOW1/SLOW2
REF_FH
INH_A
FSPB1
FSPB2
FS64PB1
FS64PB2
RFRM
S_IN_DATA12
S_IN_DATA34
REC_LEAP
IPB_DATA12
IPB_DATA34
IA_DATA12
IA_DATA34
REF_FRM
REC_FRP
PB_FRP
PB_FRM1
PB_FRM2
F_END
LEAP_FRM
ISCLK
ISSYNC
ISDIN
FS256_PB
CLK18_1
CLK18_2
CLK18_3
CLK18_4
REC_DATA12
REC_DATA34
DASD12
DASD34
DASDLR
CUE_MIX_DATA
S_PB_AUD12
S_PB_AUD34
CK_45
REC_FRM
BCK1
FS64
CUE_BCK
WCK1
FS
CUE_WCK
MCK1
CUE_MCK
FS256_P
FS256_N
DAUDCK_P
DAUDCK_N
REF:IC:15-27
R:10, 11, 15-109
C:15-36
TP:15-17
COMPONENT NAME
A PROC (IO B)
02/21
CIRCUIT BOARD NO.
VEP84326A
MODEL NO.
SCM136

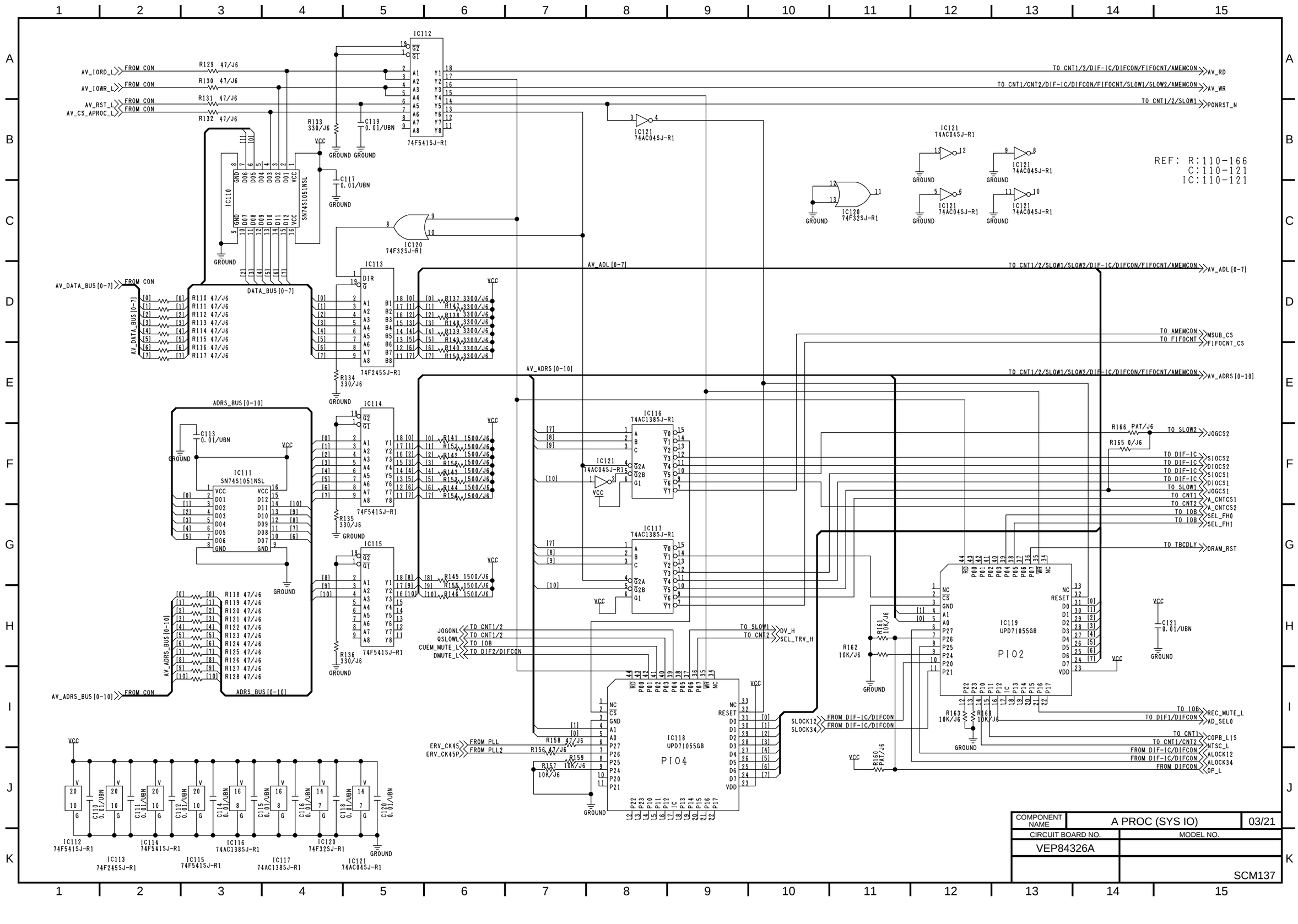
IC112
74F541SJ-R1
IC110
SN74S1051NSL
IC120
74F32SJ-R1
IC121
74AC04SJ-R1
IC113
74F245SJ-R1
IC114
IC115
IC111
SN74S1051NSL
IC116
74AC138SJ-R1
IC117
74AC138SJ-R1
IC118
UPD71055GB
PI04
IC119
UPD71055GB
PI02
AV_IORD_L
AV_IOWR_L
AV_RST_L
AV_CS_APROC_L
FROM CON
AV_DATA_BUS[0-7]
AV_ADRS_BUS[0-10]
ADRS_BUS[0-10]
DATA_BUS[0-7]
AV_ADL[0-7]
AV_ADRS[0-10]
TO CNT1/2/DIF-IC/DIFCON/FIFOCNT/AMEMCON
TO CNT1/CNT2/DIF-IC/DIFCON/FIFOCNT/SLOW1/SLOW2/AMEMCON
TO CNT1/2/SLOW1
TO CNT1/2/SLOW1/SLOW2/DIF-IC/DIFCON/FIFOCNT/AMEMCON
TO AMEMCON
TO FIFOCNT
TO SLOW2
TO DIF-IC
TO SLOW1
TO CNT1
TO CNT2
TO IOB
TO TBCDLY
AV_RD
AV_WR
PONRST_N
MSUB_CS
FIFOCNT_CS
JOGCS2
SIOCS2
DIOCS2
SIOCS1
DIOCS1
JOGCS1
A_CNTCS1
A_CNTCS2
SEL_FH0
SEL_FH1
DRAM_RST
JOGONL
QSLOWL
CUEM_MUTE_L
DMUTE_L
DV_H
SEL_TRV_H
ERV_CK45
ERV_CK45P
FROM PLL
FROM PLL2
SLOCK12
SLOCK34
FROM DIF-IC/DIFCON
REC_MUTE_L
AD_SEL0
COPB_L1S
NTSC_L
ALOCK12
ALOCK34
OP_L
R129 47/J6
R130 47/J6
R131 47/J6
R132 47/J6
R133 330/J6
R134 330/J6
R135 330/J6
R136 330/J6
C119 0.01/UBN
C117 0.01/UBN
C113 0.01/UBN
C121 0.01/UBN
R166 PAT/J6
R165 0/J6
R161 10K/J6
R162 10K/J6
R163 10K/J6
R164 10K/J6
R160 PAT/J6
R158 47/J6
R156 47/J6
R159 10K/J6
R157 10K/J6
GROUND
VCC
REF: R:110-166
C:110-121
IC:110-121
COMPONENT NAME
A PROC (SYS IO)
03/21
CIRCUIT BOARD NO.
VEP84326A
MODEL NO.
SCM137

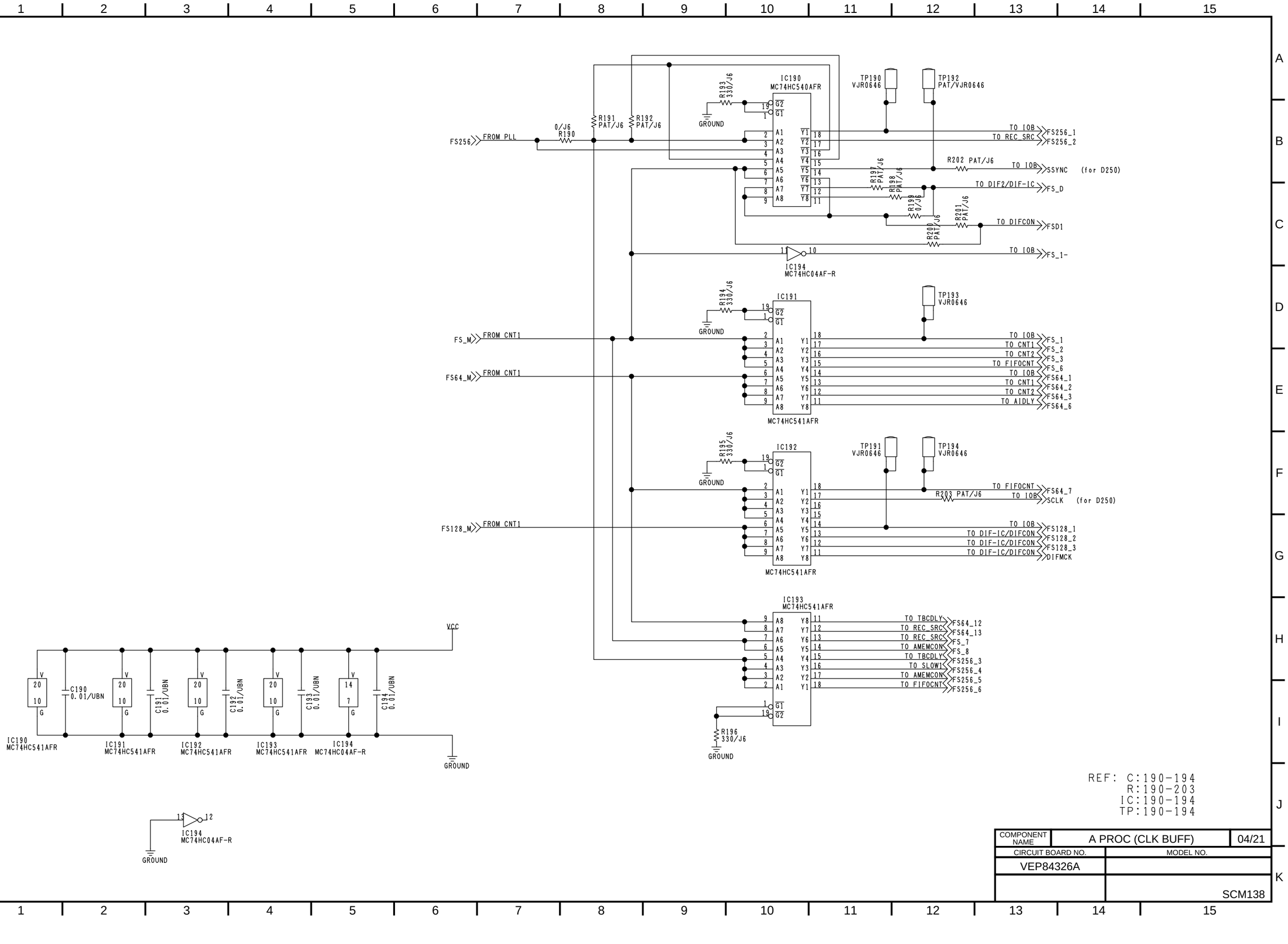

REF: C:190-194
R:190-203
IC:190-194
TP:190-194

COMPONENT NAME	A PROC (CLK BUFF)	04/21
CIRCUIT BOARD NO.	MODEL NO.	
VEP84326A		
		SCM138

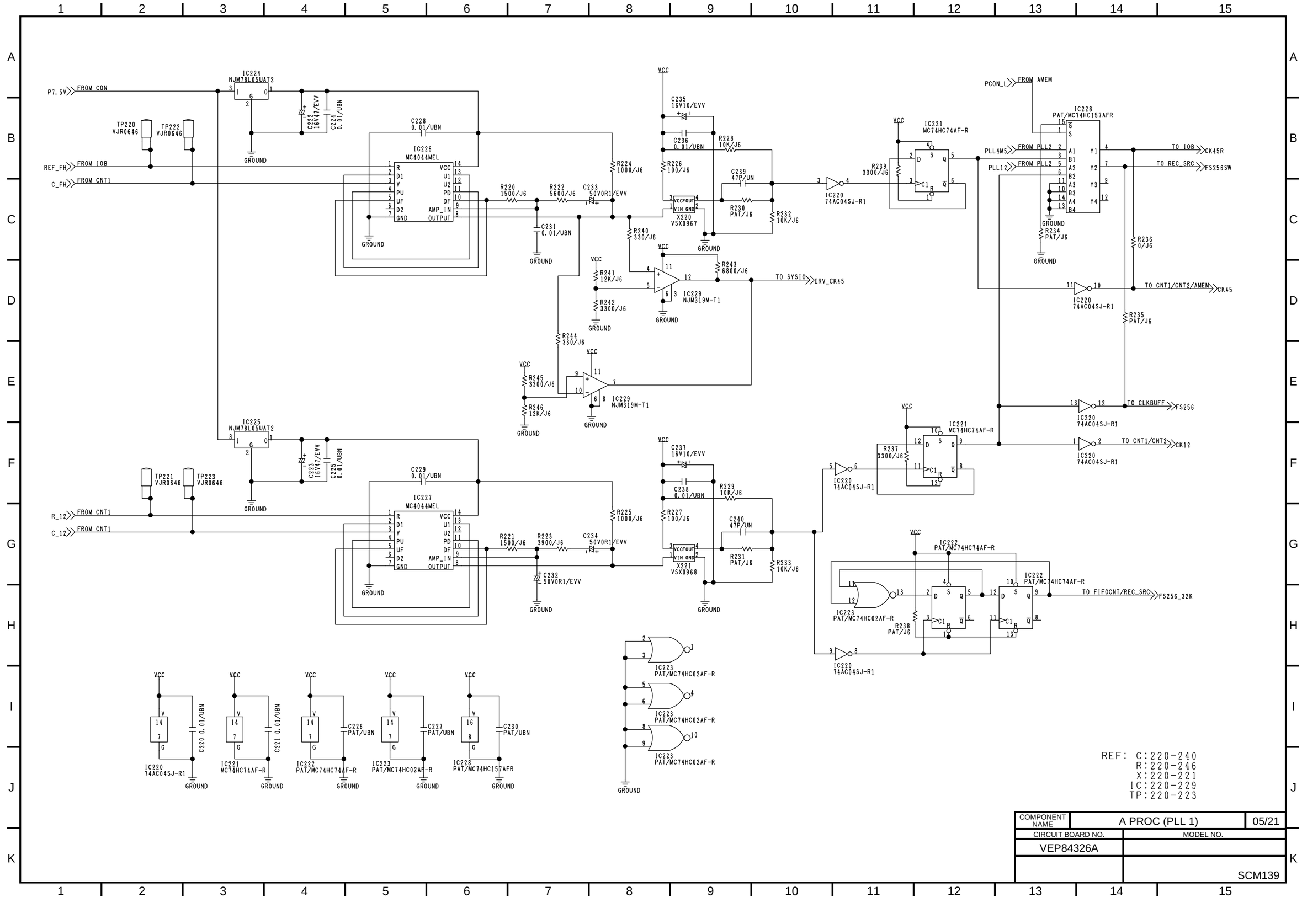

REF: C:220-240
R:220-246
X:220-221
IC:220-229
TP:220-223

COMPONENT NAME	A PROC (PLL 1)	05/21
CIRCUIT BOARD NO.	MODEL NO.	
VEP84326A		
	SCM139	

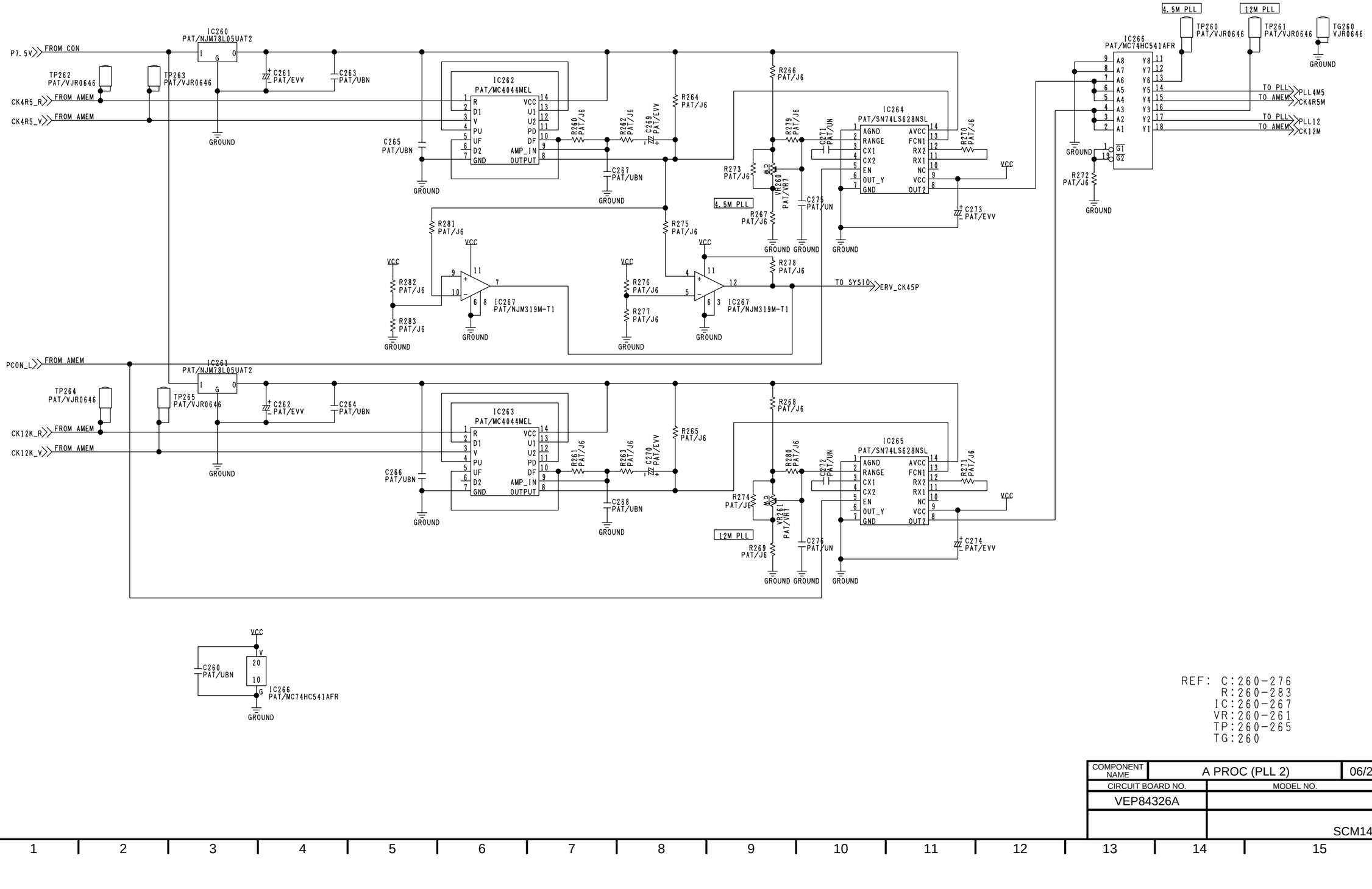

REF: C:260-276
R:260-283
IC:260-267
VR:260-261
TP:260-265
TG:260

COMPONENT NAME	A PROC (PLL 2)	06/21
CIRCUIT BOARD NO.	MODEL NO.	
VEP84326A		
	SCM140	

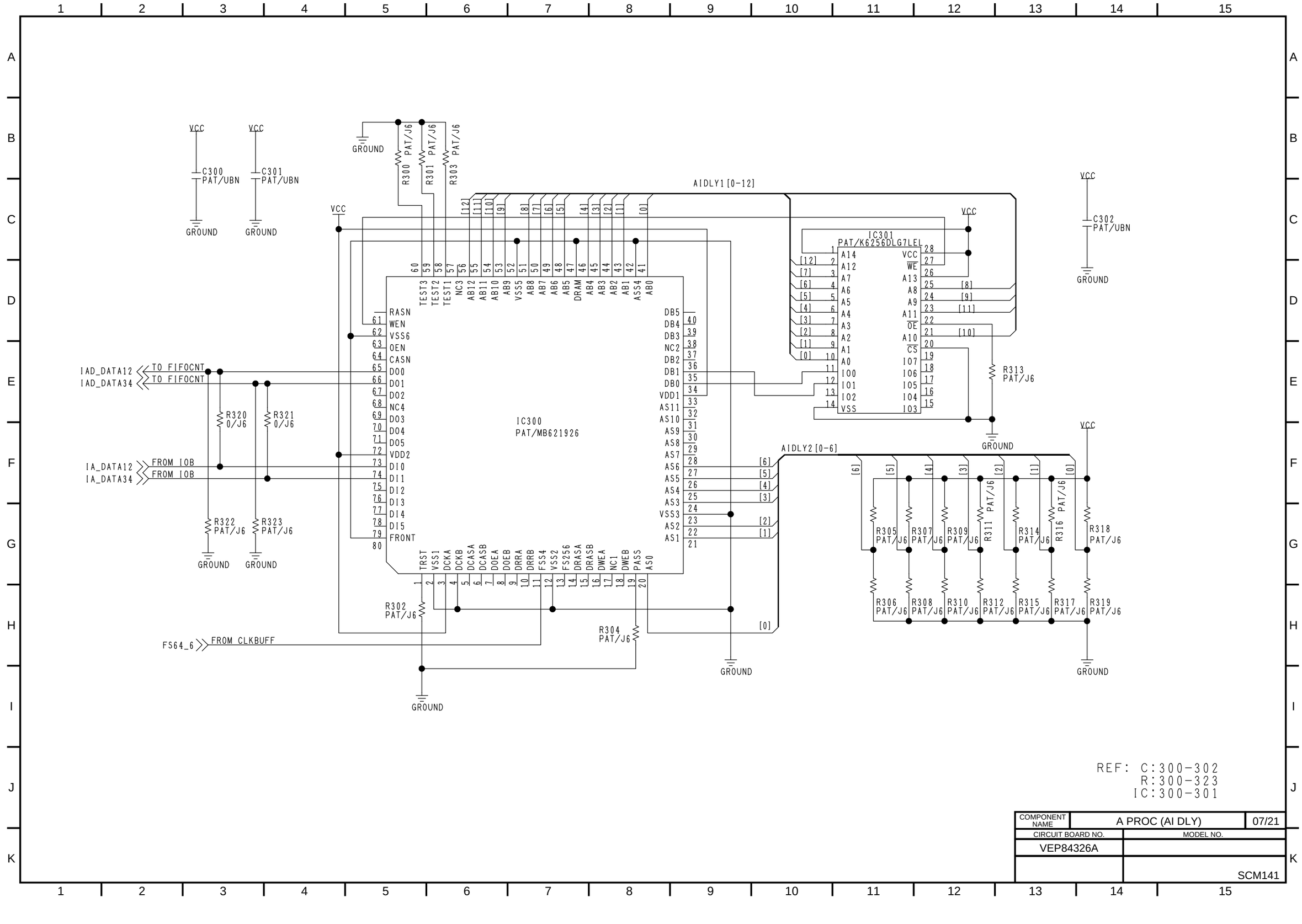

REF: C:300-302
R:300-323
IC:300-301

COMPONENT NAME	A PROC (AI DLY)	07/21
CIRCUIT BOARD NO.	MODEL NO.	
VEP84326A		
		SCM141

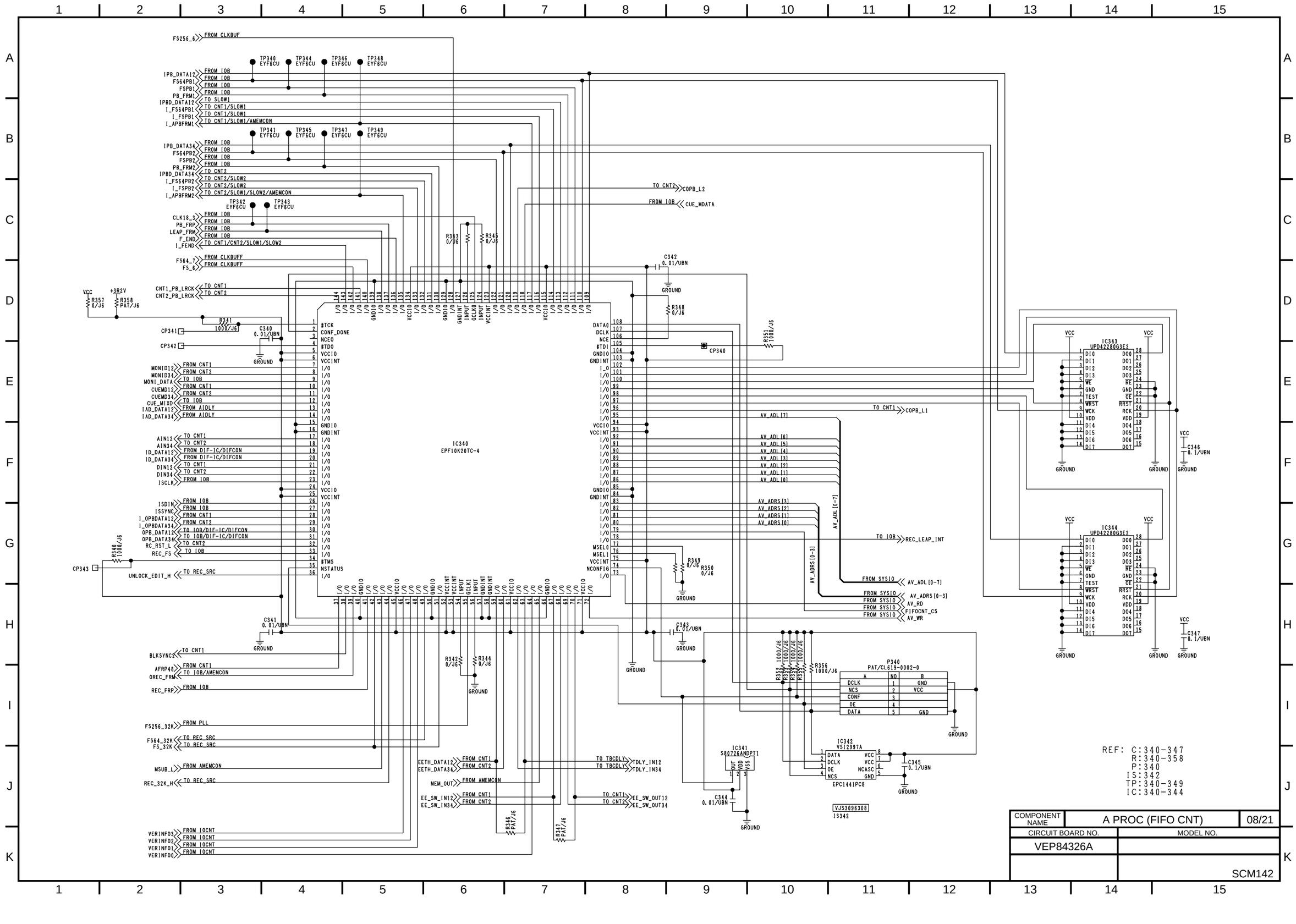
IC340
EPF10K20TC-4
IC343
UPD42280G3E2
IC344
UPD42280G3E2
P340
PAT/CL619-0002-0
IC341
S80726ANDPT1
IC342
VSI2997A
EPC1441PC8
VJS3096308
IS342
REF: C:340-347
R:340-358
P:340
IS:342
TP:340-349
IC:340-344
COMPONENT NAME
A PROC (FIFO CNT)
08/21
CIRCUIT BOARD NO.
VEP84326A
MODEL NO.
SCM142

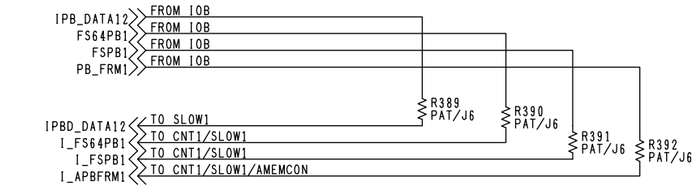

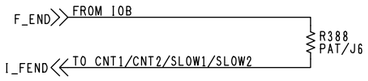

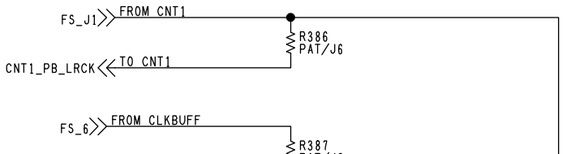

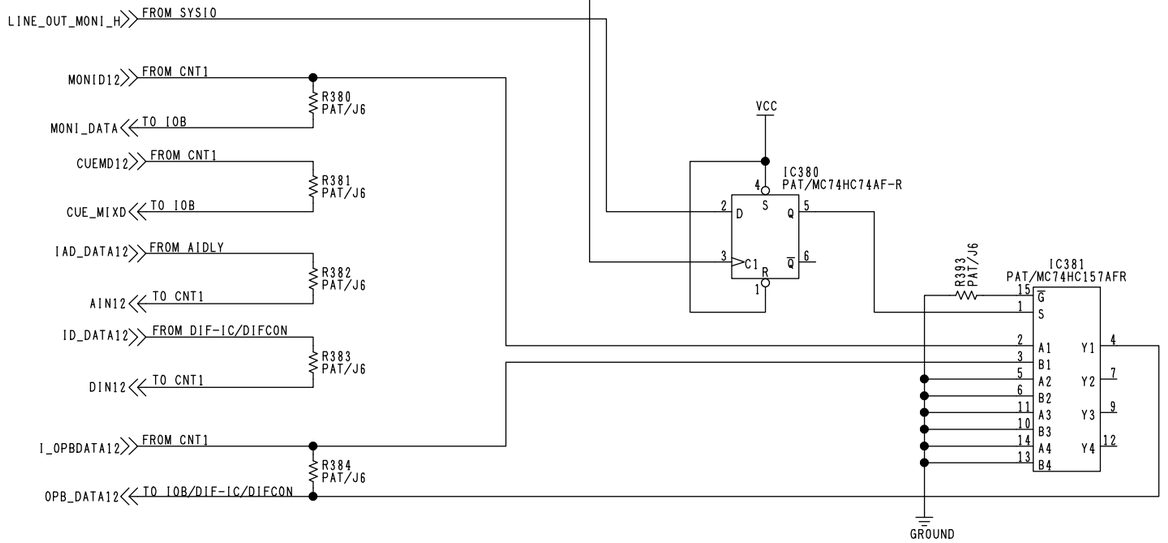

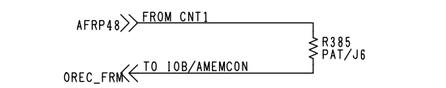

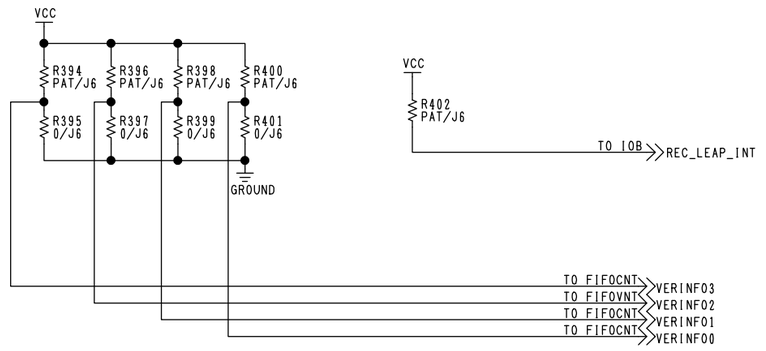

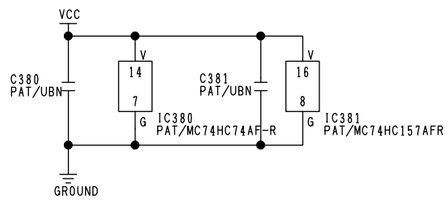

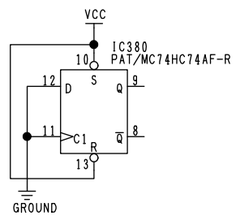

REF: C:380-381
R:380-402
IC:380-381

COMPONENT NAME	A PROC (IO CNT)	09/21
CIRCUIT BOARD NO.	MODEL NO.	
VEP84326A		
	SCM143	

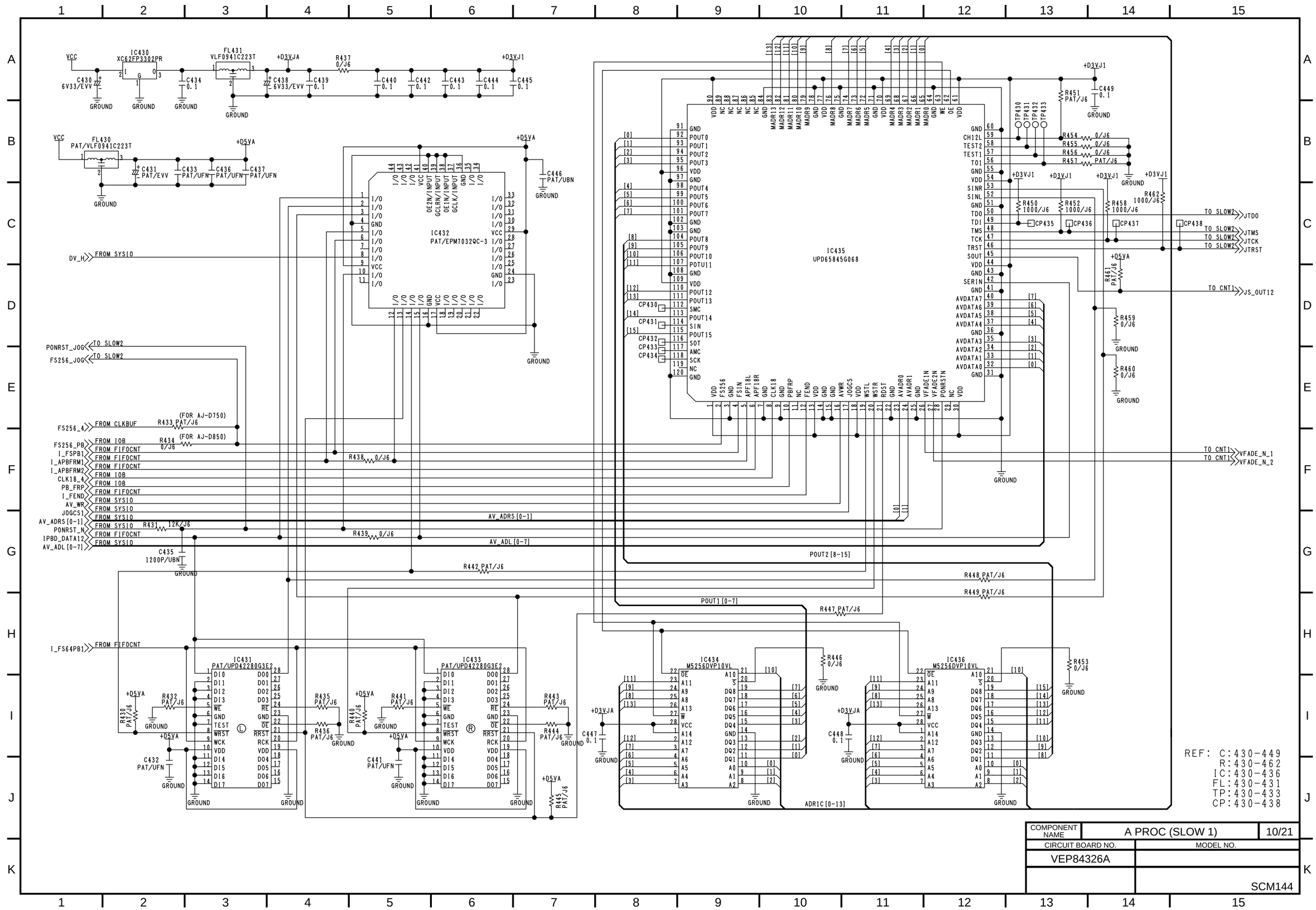
IC430 XC62FP3302PR
FL431 VLF0941C223T
+D3VJA
+D3VJ1
R437 0/J6
C430 6V33/EVV
C434 0.1
C438 6V33/EVV
C439 0.1
C440 0.1
C442 0.1
C443 0.1
C444 0.1
C445 0.1
GROUND
FL430 PAT/VLF0941C223T
+D5VA
C431 PAT/EVV
C433 PAT/UFN
C436 PAT/UFN
C437 PAT/UFN
IC432 PAT/EPM7032QC-3
C446 PAT/UBN
DV_H
FROM SYSIO
IC435 UPD65845G068
R451 PAT/J6
C449 0.1
R454 0/J6
R455 0/J6
R456 0/J6
R457 PAT/J6
TP430
TP431
TP432
TP433
R450 1000/J6
R452 1000/J6
R458 1000/J6
R462 1000/J6
CP435
CP436
CP437
CP438
TO SLOW2
JTDO
JTMS
JTCK
JTRST
R461 PAT/J6
TO CNT1
JS_OUT12
R459 0/J6
R460 0/J6
PONRST_J06
FS256_J06
FS256_4
FROM CLKBUF
R433 PAT/J6
(FOR AJ-D750)
R434 0/J6
(FOR AJ-D850)
FS256_PB
I_FSPB1
I_APBFRM1
I_APBFRM2
CLK18_4
PB_FRP
I_FEND
AV_WR
JOGCS1
AV_ADRS[0-1]
PONRST_N
IPBD_DATA12
AV_ADL[0-7]
FROM IOB
FROM FIFOCNT
FROM SYSIO
R438 0/J6
R431 12K/J6
R439 0/J6
C435 1200P/UBN
AV_ADRS[0-1]
AV_ADL[0-7]
R442 PAT/J6
POUT2[8-15]
R448 PAT/J6
R449 PAT/J6
POUT1[0-7]
R447 PAT/J6
VFADE_N_1
VFADE_N_2
I_FS64PB1
IC431 PAT/UPD42280G3E2
IC433 PAT/UPD42280G3E2
IC434 M5256DVP10VL
IC436 M5256DVP10VL
R430 PAT/J6
R432 PAT/J6
R435 PAT/J6
R436 PAT/J6
R440 PAT/J6
R441 PAT/J6
R443 PAT/J6
R444 PAT/J6
R445 PAT/J6
R446 0/J6
R453 0/J6
C432 PAT/UFN
C441 PAT/UFN
C447 0.1
C448 0.1
ADR1C[0-13]
REF: C:430-449
R:430-462
IC:430-436
FL:430-431
TP:430-433
CP:430-438
COMPONENT NAME
A PROC (SLOW 1)
10/21
CIRCUIT BOARD NO.
VEP84326A
MODEL NO.
SCM144

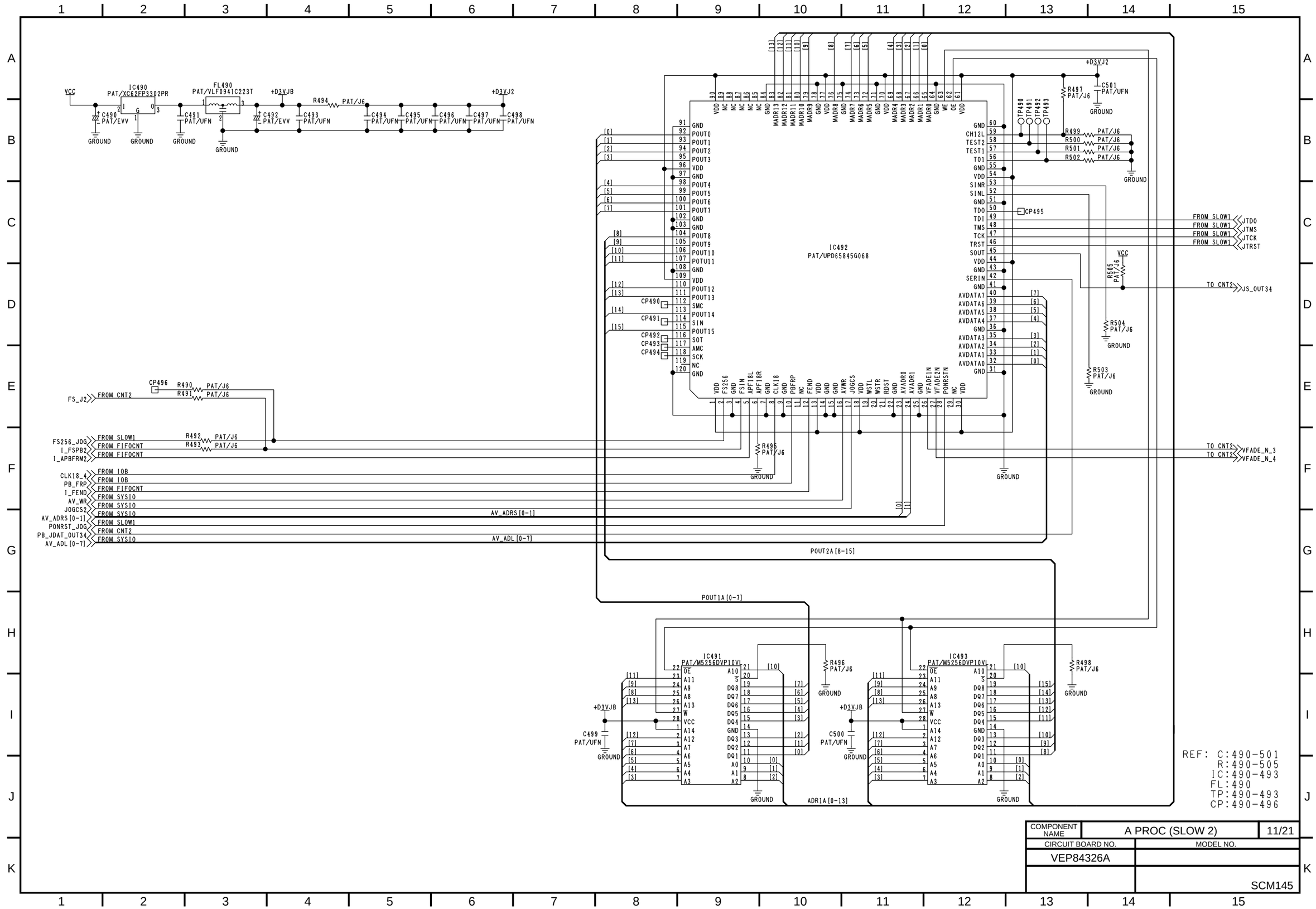

REF: C:490-501
R:490-505
IC:490-493
FL:490
TP:490-493
CP:490-496

COMPONENT NAME	A PROC (SLOW 2)	11/21
CIRCUIT BOARD NO.	MODEL NO.	
VEP84326A		
		SCM145

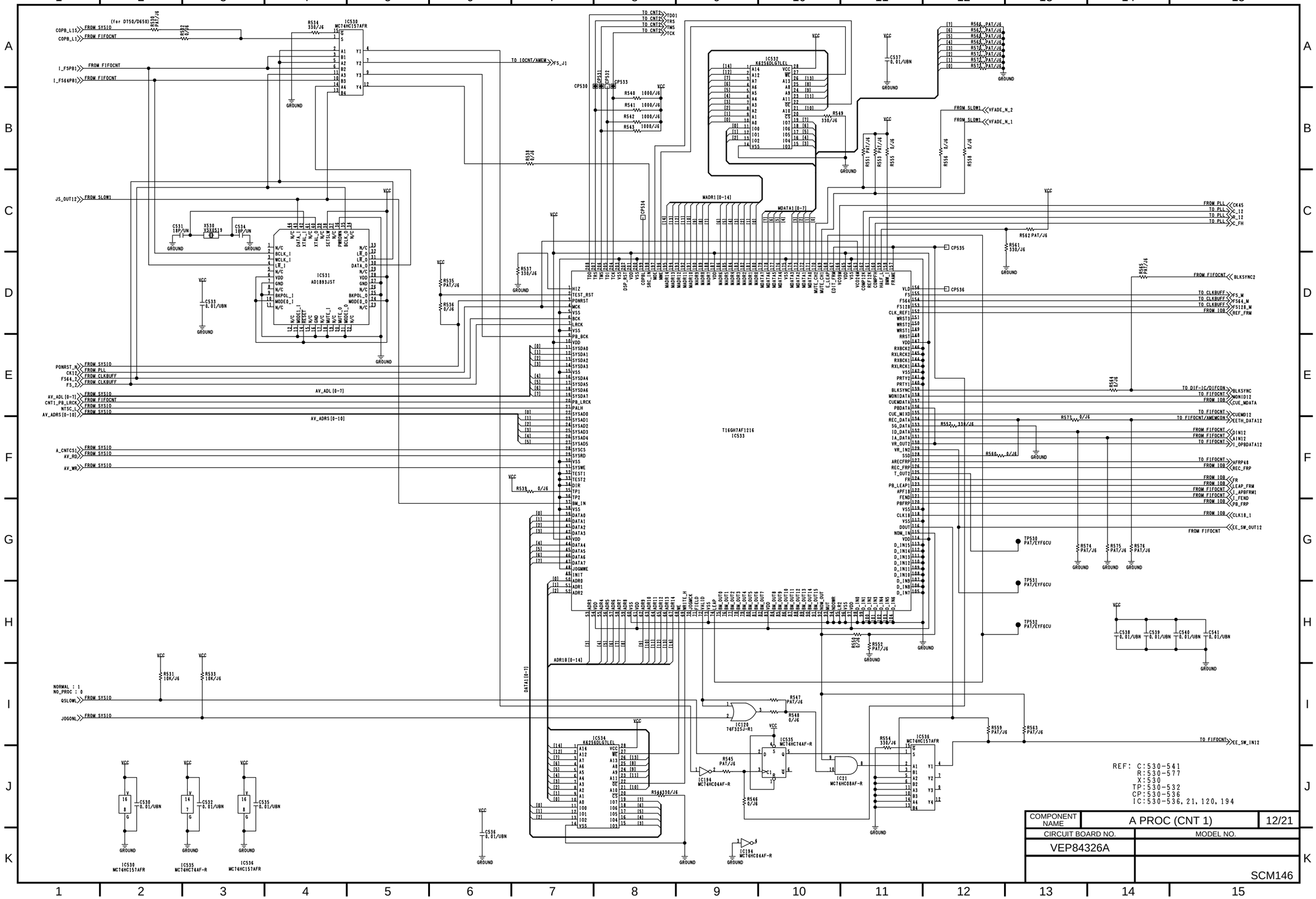
IC530 MC74HC157AFR
IC531 AD1893JST
IC532 K6256DL-GTLEL
IC533 T16GH7AF1216
IC534 K6256DL-GTLEL
IC535 MC74HC74AF-R
IC536 MC74HC157AFR
IC120 74F32SJ-R1
IC194 MC74HC04AF-R
IC21 MC74HC08AF-R
CP530
CP531
CP532
CP533
CP534
CP535
CP536
X530 VSX6519
C530 0.01/UBN
C531 18P/UN
C532 0.01/UBN
C533 0.01/UBN
C534 18P/UN
C535 0.01/UBN
C536 0.01/UBN
C537 0.01/UBN
C538 0.01/UBN
C539 0.01/UBN
C540 0.01/UBN
C541 0.01/UBN
R530 PAT/J6
R531 10K/J6
R532 0/J6
R533 10K/J6
R534 330/J6
R535 PAT/J6
R536 0/J6
R537 330/J6
R538 0/J6
R539 0/J6
R540 1000/J6
R541 1000/J6
R542 1000/J6
R543 1000/J6
R544 330/J6
R545 PAT/J6
R546 0/J6
R547 PAT/J6
R548 0/J6
R549 330/J6
R550 PAT/J6
R551 PAT/J6
R552 PAT/J6
R553 PAT/J6
R554 330/J6
R555 0/J6
R556 0/J6
R557 PAT/J6
R558 0/J6
R559 PAT/J6
R560 0/J6
R561 330/J6
R562 PAT/J6
R563 PAT/J6
R565 PAT/J6
R566 PAT/J6
R567 PAT/J6
R568 PAT/J6
R569 PAT/J6
R570 PAT/J6
R571 PAT/J6
R572 PAT/J6
R573 0/J6
R574 PAT/J6
R575 PAT/J6
R576 PAT/J6
TP530 PAT/EYF6CU
TP531 PAT/EYF6CU
TP532 PAT/EYF6CU
FROM SYSIO
FROM FIFOCNT
FROM SLOW1
FROM PLL
FROM CLKBUFF
TO I2CNT/AMEM
TO CNT2
TO IOCNT/AMEM
TO DIF-IC/DIFCON
TO FIFOCNT/AMEMCON
TO IOB
TO CLKBUFF
AV_ADL[0-7]
AV_ADRS[0-10]
ADR1B[0-14]
DAT1[0-7]
MADR1[0-14]
MDATA1[0-7]
REF: C:530-541
R:530-577
X:530
TP:530-532
CP:530-536
IC:530-536, 21, 120, 194
COMPONENT NAME
A PROC (CNT 1)
12/21
CIRCUIT BOARD NO.
VEP84326A
MODEL NO.
SCM146

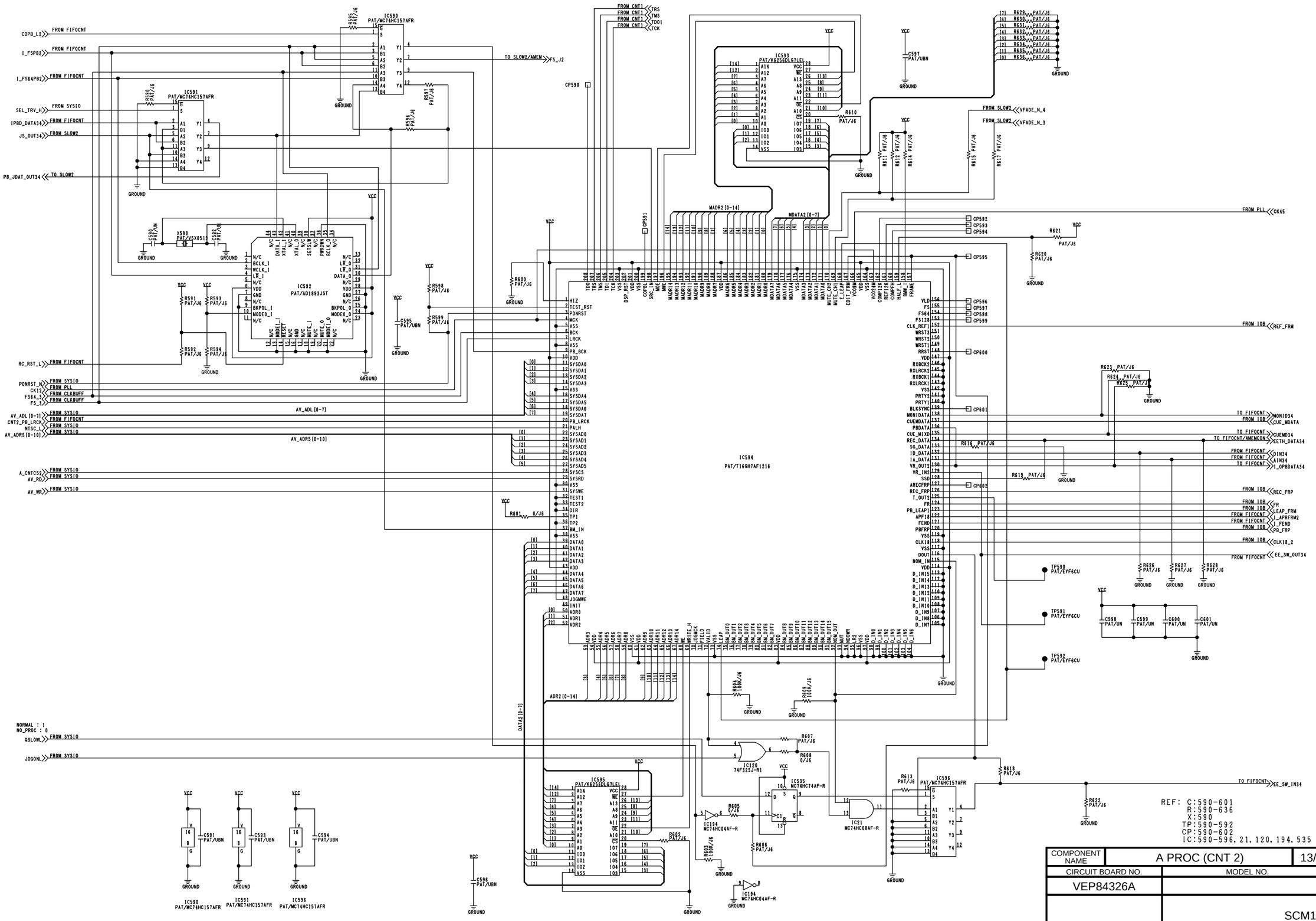

COMPONENT NAME	A PROC (CNT 2)	13/21
CIRCUIT BOARD NO.	MODEL NO.	
VEP84326A		
		SCM147

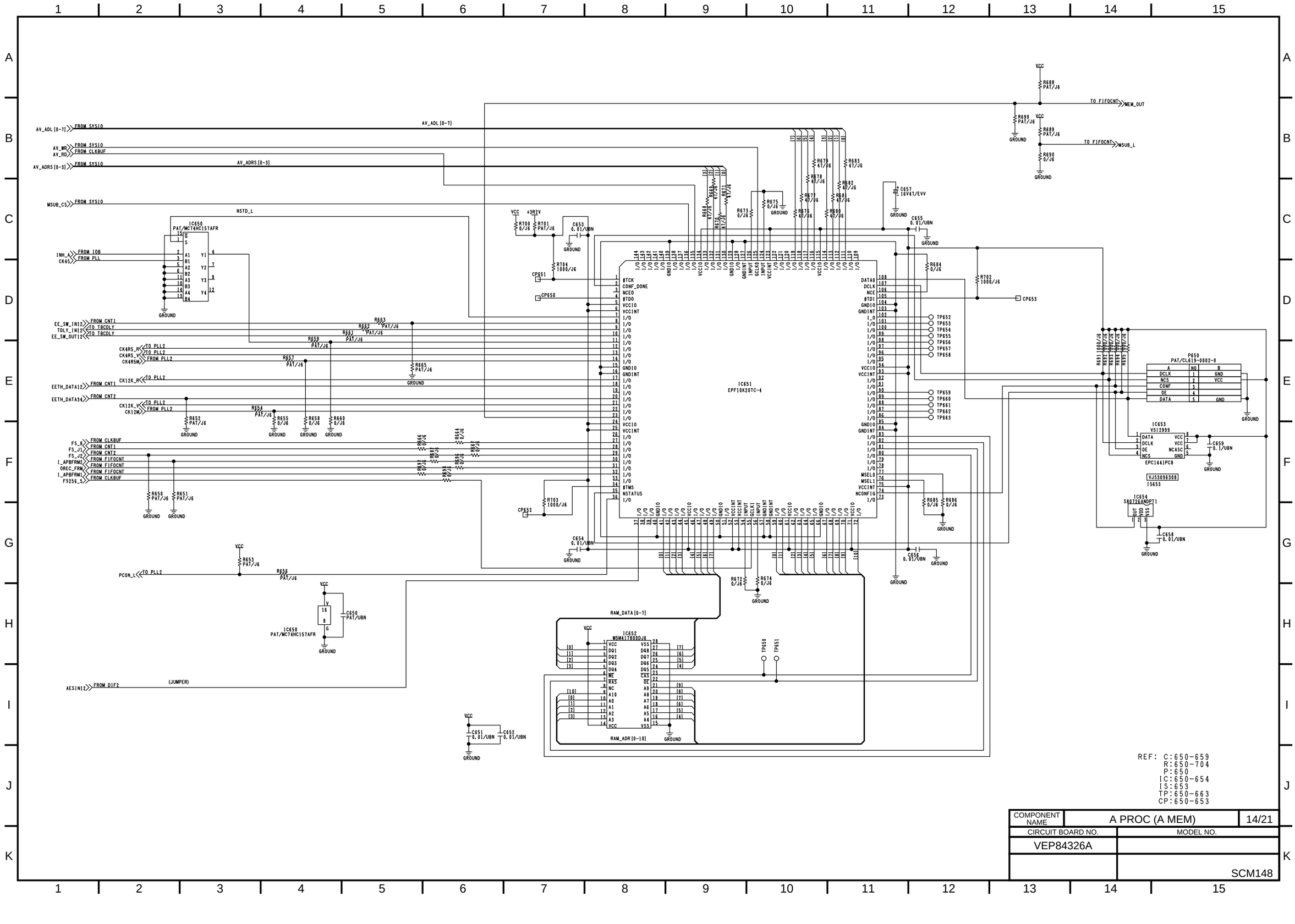
IC650
PAT/MC74HC157AFR
IC651
EPF10K20TC-4
IC652
MSM417800DJ6
IC653
VS12999
EPC1441PC8
VJ53096308
IS653
IC654
S8072GANDPT1
P650
PAT/CL619-0002-0
DCLK
NCS
CONF
OE
DATA
GND
VCC
AV_ADL[0-7]
AV_ADRS[0-3]
AV_WR
AV_RD
MSUB_CS
NSTD_L
INH_A
CK45
EE_SW_IN12
TDLY_IN12
EE_SW_OUT12
CK4RS_R
CK4RS_V
CK4RSM
EETH_DATA12
EETH_DATA34
CK12K_R
CK12K_V
CK12M
FS_0
FS_1
FS_2
I_APBFRM2
OREC_FRM
I_APBFRM1
FS256_S
PCON_L
AESIN12
(JUMPER)
RAM_DATA[0-7]
RAM_ADR[0-10]
TO_FIFOCNT
MEM_OUT
MSUB_L
REF: C:650-659
R:650-704
P:650
IC:650-654
IS:653
TP:650-663
CP:650-653
COMPONENT NAME
A PROC (A MEM)
14/21
CIRCUIT BOARD NO.
VEP84326A
MODEL NO.
SCM148

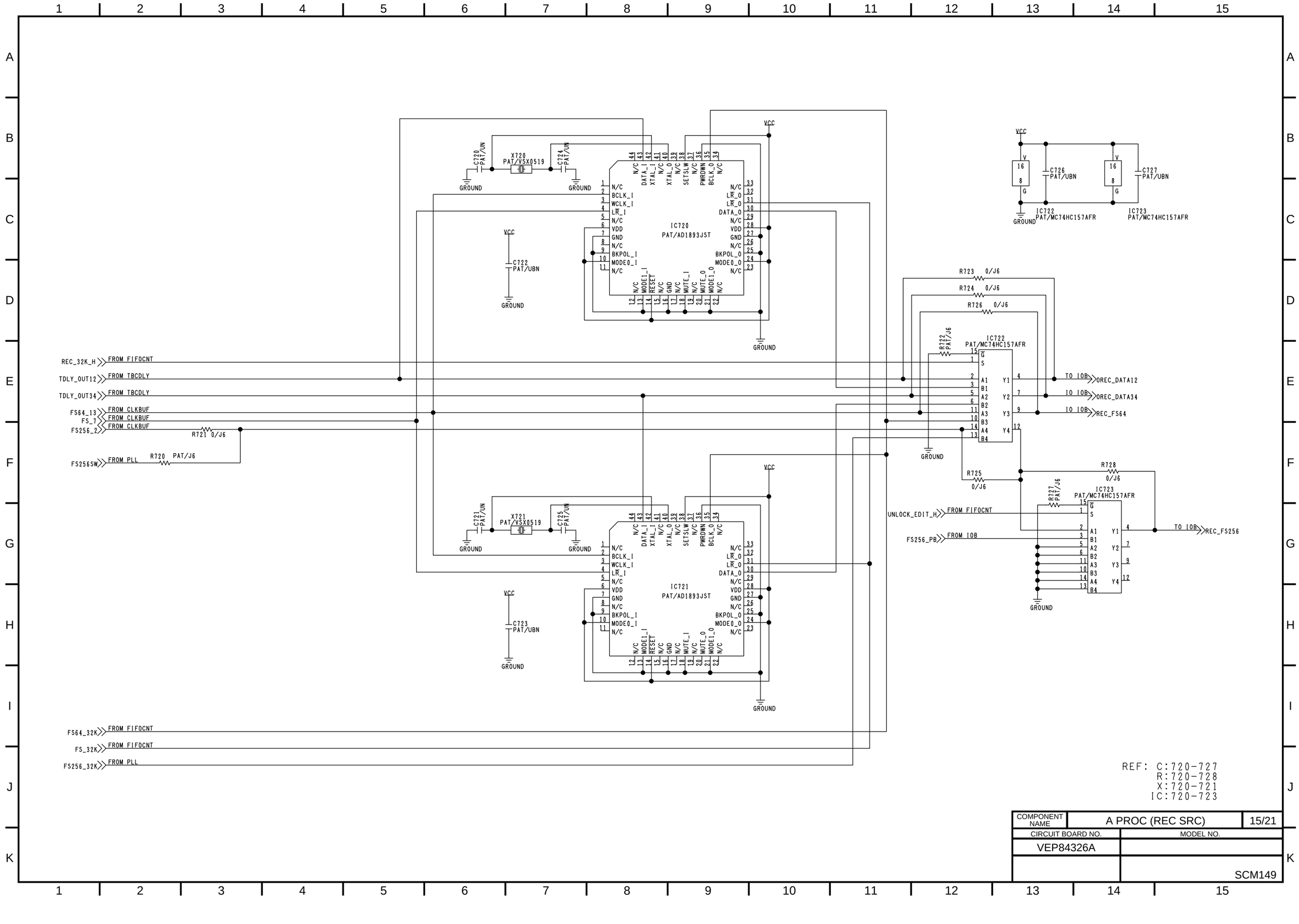

REF: C:720-727
R:720-728
X:720-721
IC:720-723

COMPONENT NAME	A PROC (REC SRC)	15/21
CIRCUIT BOARD NO.	MODEL NO.	
VEP84326A		
		SCM149

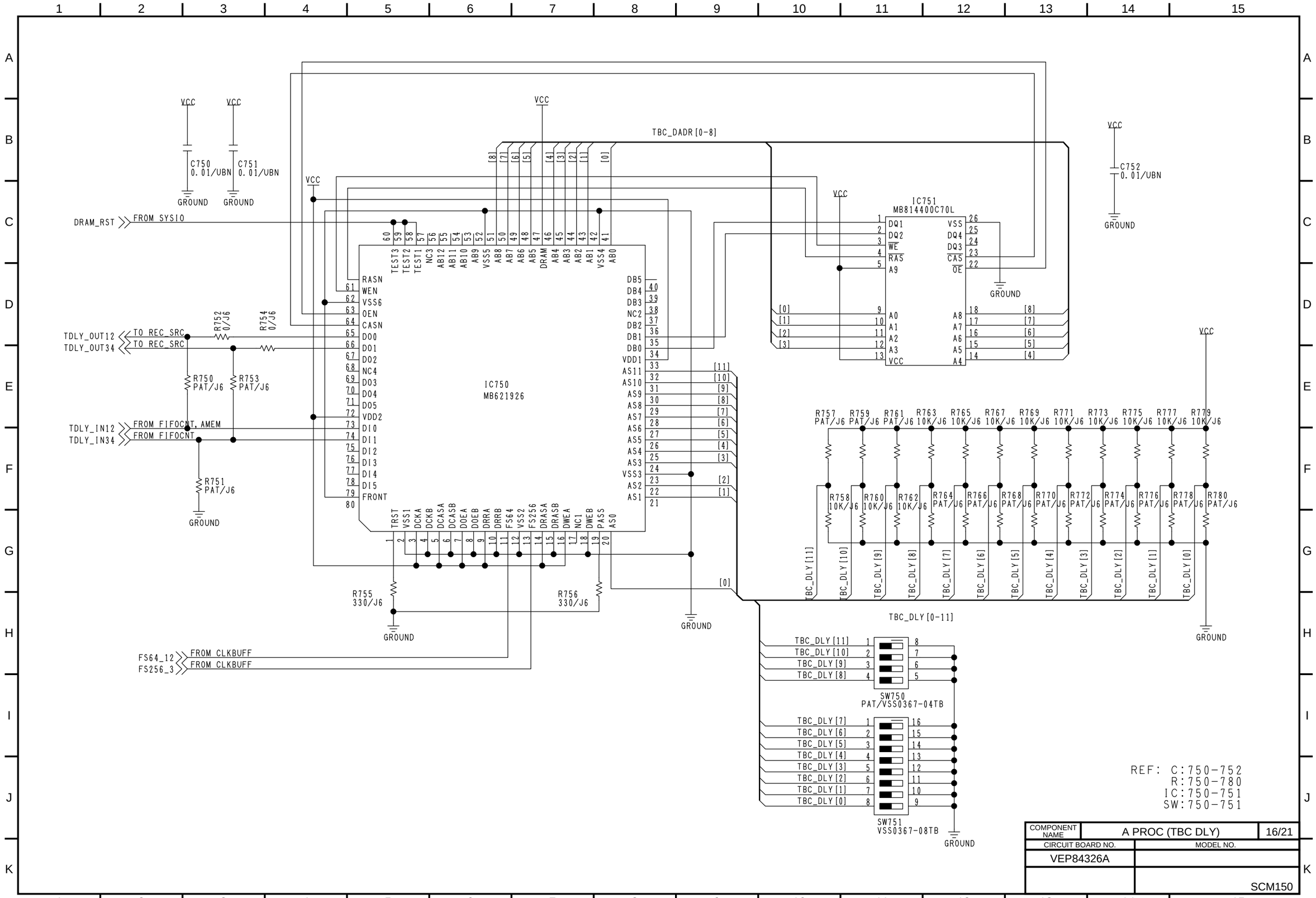
C750 0.01/UBN
C751 0.01/UBN
C752 0.01/UBN
VCC
GROUND
DRAM_RST
FROM SYSIO
TBC_DADR[0-8]
IC750
MB621926
IC751
MB814400C70L
TDLY_OUT12
TDLY_OUT34
TO REC SRC
R752 0/J6
R754 0/J6
R750 PAT/J6
R753 PAT/J6
TDLY_IN12
TDLY_IN34
FROM FIFOCNT,AMEM
FROM FIFOCNT
R751 PAT/J6
R755 330/J6
R756 330/J6
FS64_12
FS256_3
FROM CLKBUFF
R757 PAT/J6
R759 PAT/J6
R761 PAT/J6
R763 10K/J6
R765 10K/J6
R767 10K/J6
R769 10K/J6
R771 10K/J6
R773 10K/J6
R775 10K/J6
R777 10K/J6
R779 10K/J6
R758 10K/J6
R760 10K/J6
R762 10K/J6
R764 PAT/J6
R766 PAT/J6
R768 PAT/J6
R770 PAT/J6
R772 PAT/J6
R774 PAT/J6
R776 PAT/J6
R778 PAT/J6
R780 PAT/J6
TBC_DLY[0-11]
SW750
PAT/VSS0367-04TB
SW751
VSS0367-08TB
REF: C:750-752
R:750-780
IC:750-751
SW:750-751
COMPONENT NAME
A PROC (TBC DLY)
16/21
CIRCUIT BOARD NO.
VEP84326A
MODEL NO.
SCM150

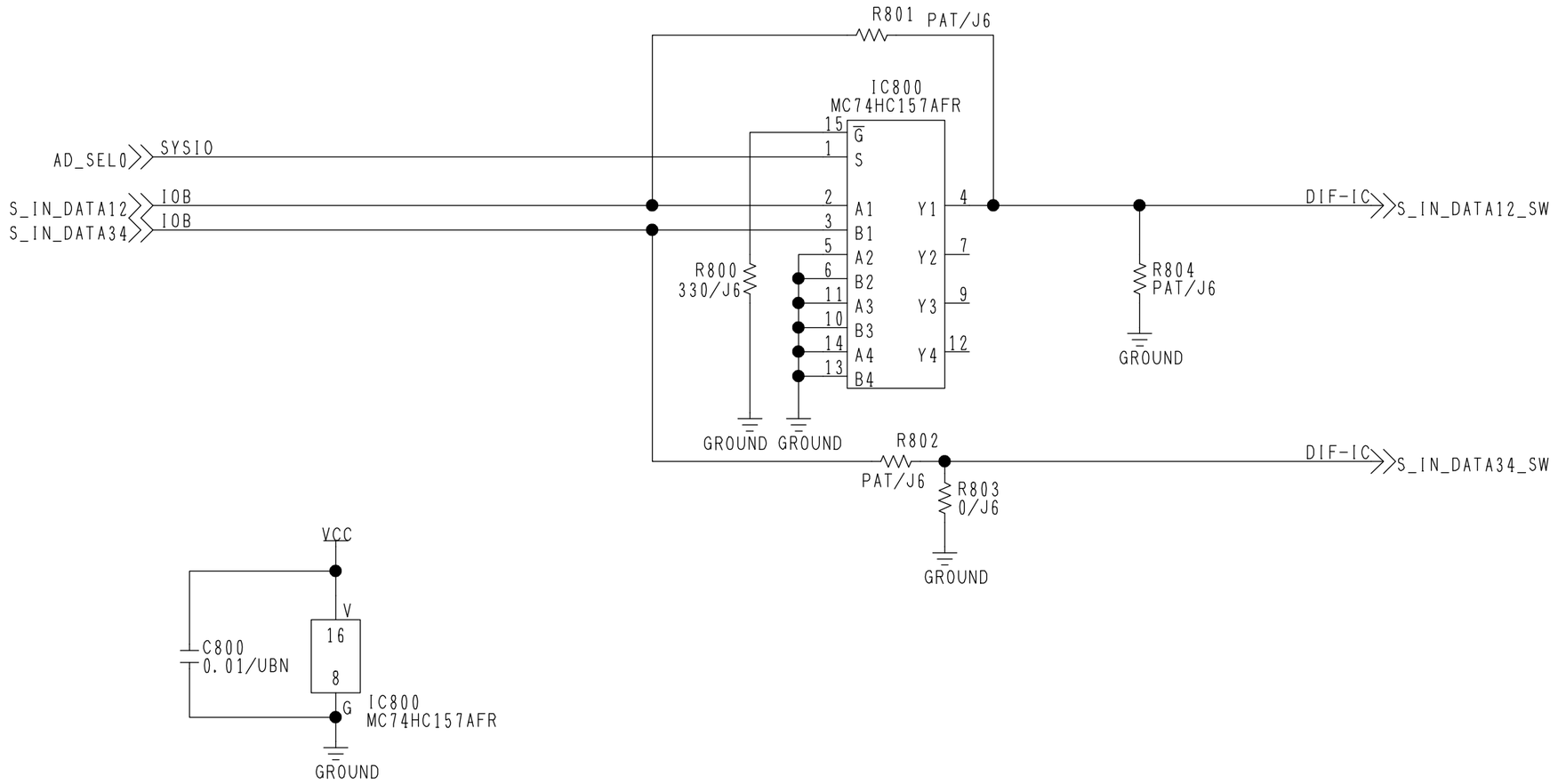

REF: C:800
R:800-804
IC:800

COMPONENT NAME	A PROC (DIF 1)	17/21
CIRCUIT BOARD NO.	MODEL NO.	
VEP84326A		
		SCM151

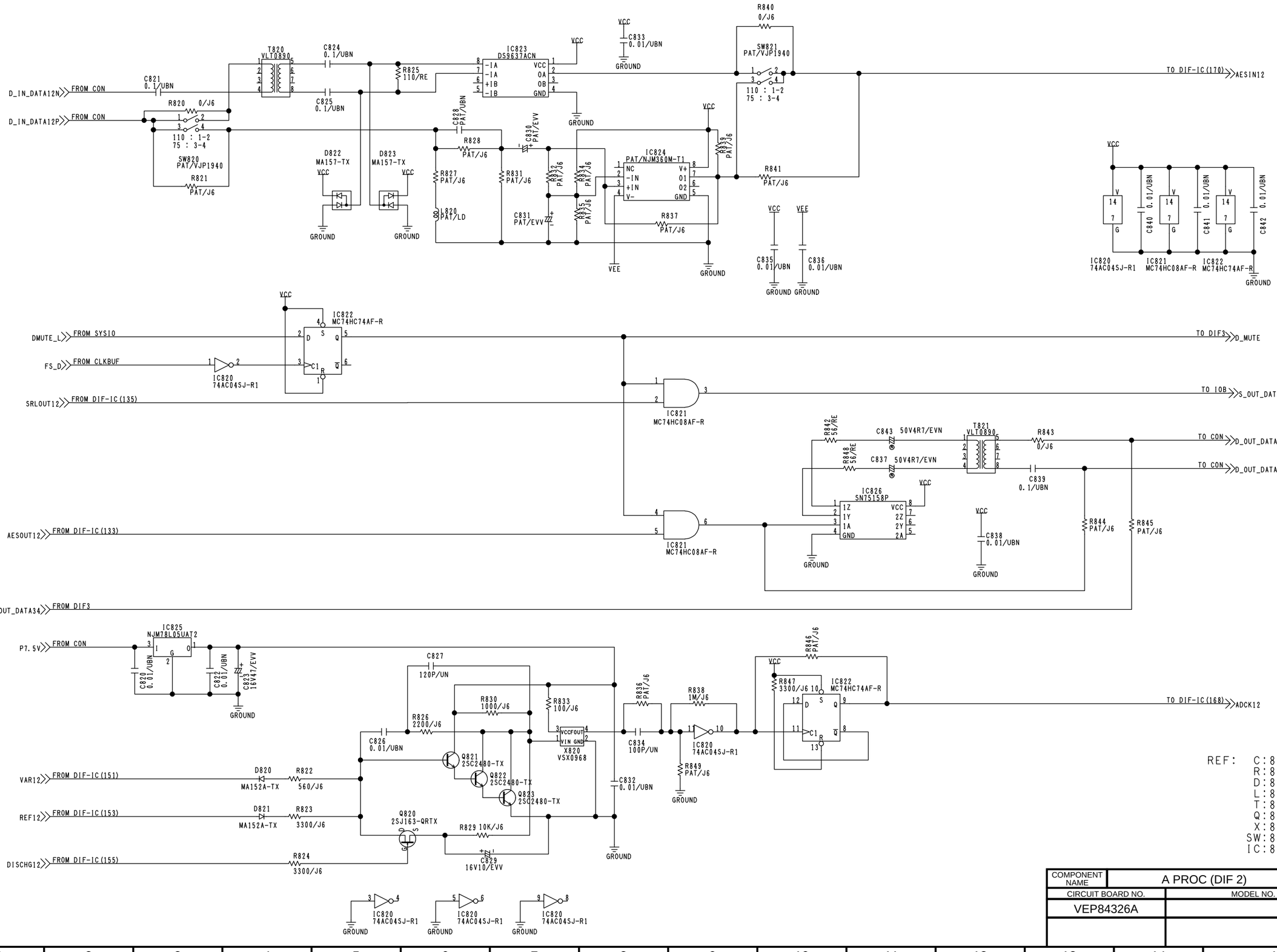
D_IN_DATA12N
FROM CON
D_IN_DATA12P
FROM CON
C821 0.1/UBN
T820 VLT0890
C824 0.1/UBN
C825 0.1/UBN
R820 0/J6
110 : 1-2
75 : 3-4
SW820 PAT/VJP1940
R821 PAT/J6
R825 110/RE
IC823 DS9637ACN
C833 0.01/UBN
GROUND
R840 0/J6
SW821 PAT/VJP1940
TO DIF-IC(170)
AESIN12
C828 PAT/UBN
C830 PAT/EVV
R828 PAT/J6
R827 PAT/J6
R831 PAT/J6
L820 PAT/LD
C831 PAT/EVV
R832 PAT/J6
R834 PAT/J6
R835 PAT/J6
D822 MA157-TX
D823 MA157-TX
IC824 PAT/NJM360M-T1
R839 PAT/J6
R841 PAT/J6
R837 PAT/J6
VEE
C835 0.01/UBN
C836 0.01/UBN
GROUND GROUND
IC820 74AC04SJ-R1
IC821 MC74HC08AF-R
IC822 MC74HC74AF-R
C840 0.01/UBN
C841 0.01/UBN
C842 0.01/UBN
DMUTE_L
FROM SYSIO
FS_D
FROM CLKBUF
SRLOUT12
FROM DIF-IC(135)
IC822 MC74HC74AF-R
IC820 74AC04SJ-R1
IC821 MC74HC08AF-R
TO DIF3
D_MUTE
TO IOB
S_OUT_DATA12
AESOUT12
FROM DIF-IC(133)
R842 56/RE
R848 56/RE
C843 50V4R7/EVN
C837 50V4R7/EVN
T821 VLT0890
R843 0/J6
C839 0.1/UBN
TO CON
D_OUT_DATA12P
TO CON
D_OUT_DATA12N
IC826 SN75158P
C838 0.01/UBN
R844 PAT/J6
R845 PAT/J6
DIF_OUT_DATA34
FROM DIF3
P7.5V
FROM CON
IC825 NJM78L05UAT2
C820 0.01/UBN
C822 0.01/UBN
C823 16V47/EVV
C827 120P/UN
R830 1000/J6
R826 2200/J6
R833 100/J6
C826 0.01/UBN
X820 VSX0968
R836 PAT/J6
C834 100P/UN
R838 1M/J6
R849 PAT/J6
C832 0.01/UBN
R846 PAT/J6
R847 3300/J6
TO DIF-IC(168)
ADCK12
VAR12
FROM DIF-IC(151)
REF12
FROM DIF-IC(153)
DISCHG12
FROM DIF-IC(155)
D820 MA152A-TX
R822 560/J6
D821 MA152A-TX
R823 3300/J6
Q820 2SJ163-QRTX
R829 10K/J6
C829 16V10/EVV
R824 3300/J6
Q821 2SC2480-TX
Q822 2SC2480-TX
Q823 2SC2480-TX
REF: C:820-843
R:820-849
D:820-823
L:820-820
T:820-821
Q:820-823
X:820-820
SW:820-821
IC:820-826
COMPONENT NAME
A PROC (DIF 2)
18/21
CIRCUIT BOARD NO.
VEP84326A
MODEL NO.
SCM152

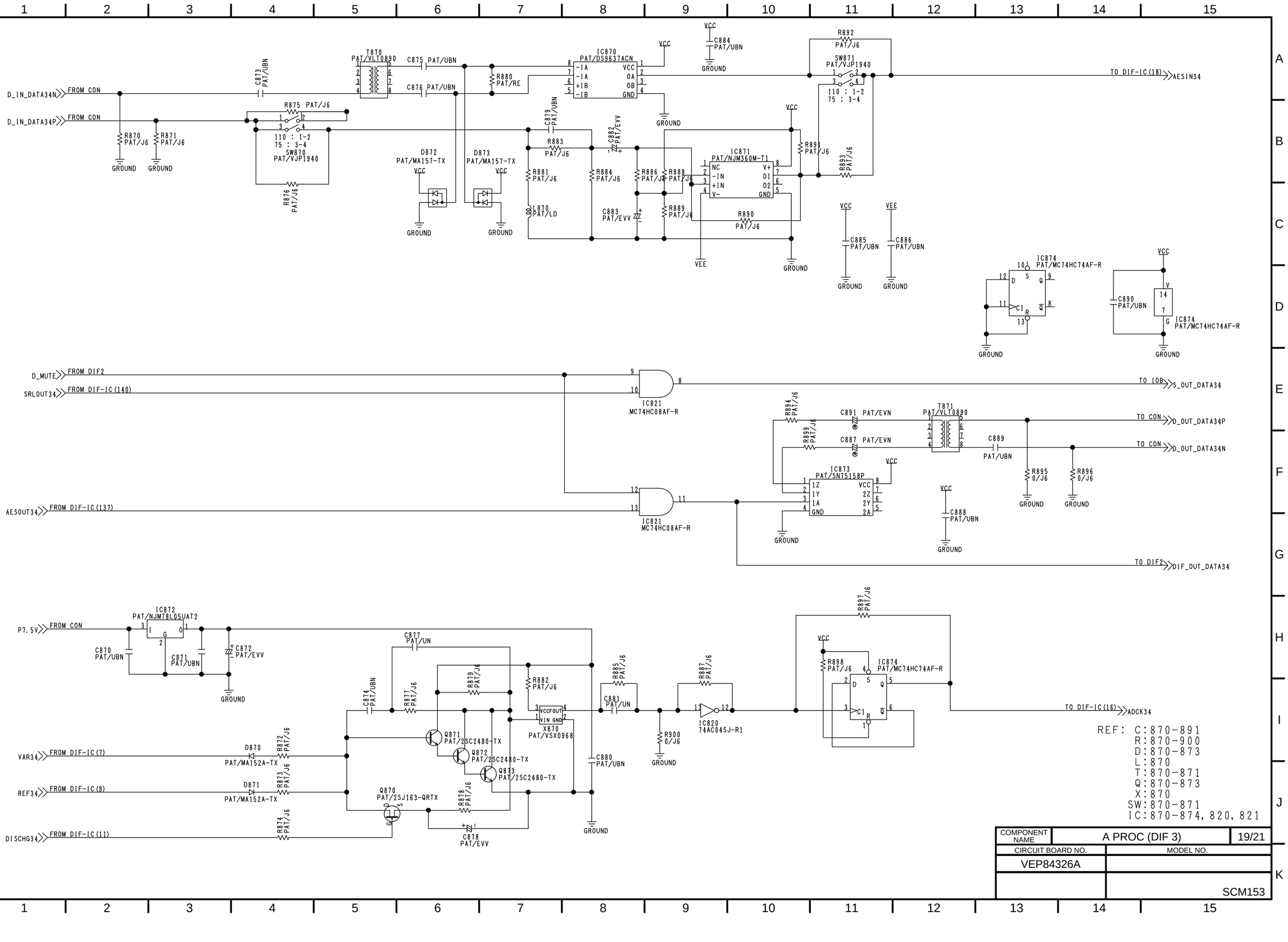
D_IN_DATA34N
FROM CON
D_IN_DATA34P
FROM CON
R870 PAT/J6
R871 PAT/J6
GROUND
GROUND
C873 PAT/UBN
R875 PAT/J6
110 : 1-2
75 : 3-4
SW870 PAT/VJP1940
R876 PAT/J6
T870 PAT/VLT0890
C875 PAT/UBN
C876 PAT/UBN
R880 PAT/RE
IC870 PAT/DS9637ACN
-IA
-IA
+IB
-IB
VCC
OA
OB
GND
VCC
GROUND
C884 PAT/UBN
GROUND
R892 PAT/J6
SW871 PAT/VJP1940
110 : 1-2
75 : 3-4
TO DIF-IC(18)
AESIN34
C879 PAT/UBN
C882 PAT/EVV
R883 PAT/J6
R881 PAT/J6
R884 PAT/J6
R886 PAT/J6
R888 PAT/J6
L870 PAT/LD
C883 PAT/EVV
D872 PAT/MA157-TX
D873 PAT/MA157-TX
VCC
GROUND
VCC
GROUND
IC871 PAT/NJM360M-T1
NC
-IN
+IN
V-
V+
O1
O2
GND
R889 PAT/J6
R890 PAT/J6
VEE
GROUND
VCC
R891 PAT/J6
R893 PAT/J6
C885 PAT/UBN
GROUND
VEE
C886 PAT/UBN
GROUND
IC874 PAT/MC74HC74AF-R
D
S
Q
C1
R
GROUND
VCC
C890 PAT/UBN
IC874 PAT/MC74HC74AF-R
GROUND
D_MUTE
FROM DIF2
SRLOUT34
FROM DIF-IC(140)
IC821 MC74HC08AF-R
TO IOB
S_OUT_DATA34
AESOUT34
FROM DIF-IC(137)
IC821 MC74HC08AF-R
R894 PAT/J6
R899 PAT/J6
C891 PAT/EVN
C887 PAT/EVN
T871 PAT/VLT0890
C889 PAT/UBN
TO CON
D_OUT_DATA34P
TO CON
D_OUT_DATA34N
IC873 PAT/SN75158P
1Z
1Y
1A
GND
VCC
2Z
2Y
2A
VCC
GROUND
C888 PAT/UBN
GROUND
R895 0/J6
R896 0/J6
GROUND
GROUND
TO DIF2
DIF_OUT_DATA34
IC872 PAT/NJM78L05UAT2
P7.5V
FROM CON
C870 PAT/UBN
C871 PAT/UBN
C872 PAT/EVV
GROUND
C877 PAT/UN
C874 PAT/UBN
R877 PAT/J6
R879 PAT/J6
R882 PAT/J6
R885 PAT/J6
R887 PAT/J6
C881 PAT/UN
X870 PAT/VSX0968
VCCFOUT
VIN
GND
R900 0/J6
GROUND
IC820 74AC04SJ-R1
R897 PAT/J6
VCC
R898 PAT/J6
IC874 PAT/MC74HC74AF-R
TO DIF-IC(16)
ADCK34
VAR34
FROM DIF-IC(7)
D870 PAT/MA152A-TX
R872 PAT/J6
REF34
FROM DIF-IC(9)
D871 PAT/MA152A-TX
R873 PAT/J6
DISCHG34
FROM DIF-IC(11)
R874 PAT/J6
Q870 PAT/2SJ163-QRTX
R878 PAT/J6
C878 PAT/EVV
Q871 PAT/2SC2480-TX
Q872 PAT/2SC2480-TX
Q873 PAT/2SC2480-TX
C880 PAT/UBN
GROUND
REF: C:870-891
R:870-900
D:870-873
L:870
T:870-871
Q:870-873
X:870
SW:870-871
IC:870-874, 820, 821
COMPONENT NAME
A PROC (DIF 3)
19/21
CIRCUIT BOARD NO.
VEP84326A
MODEL NO.
SCM153

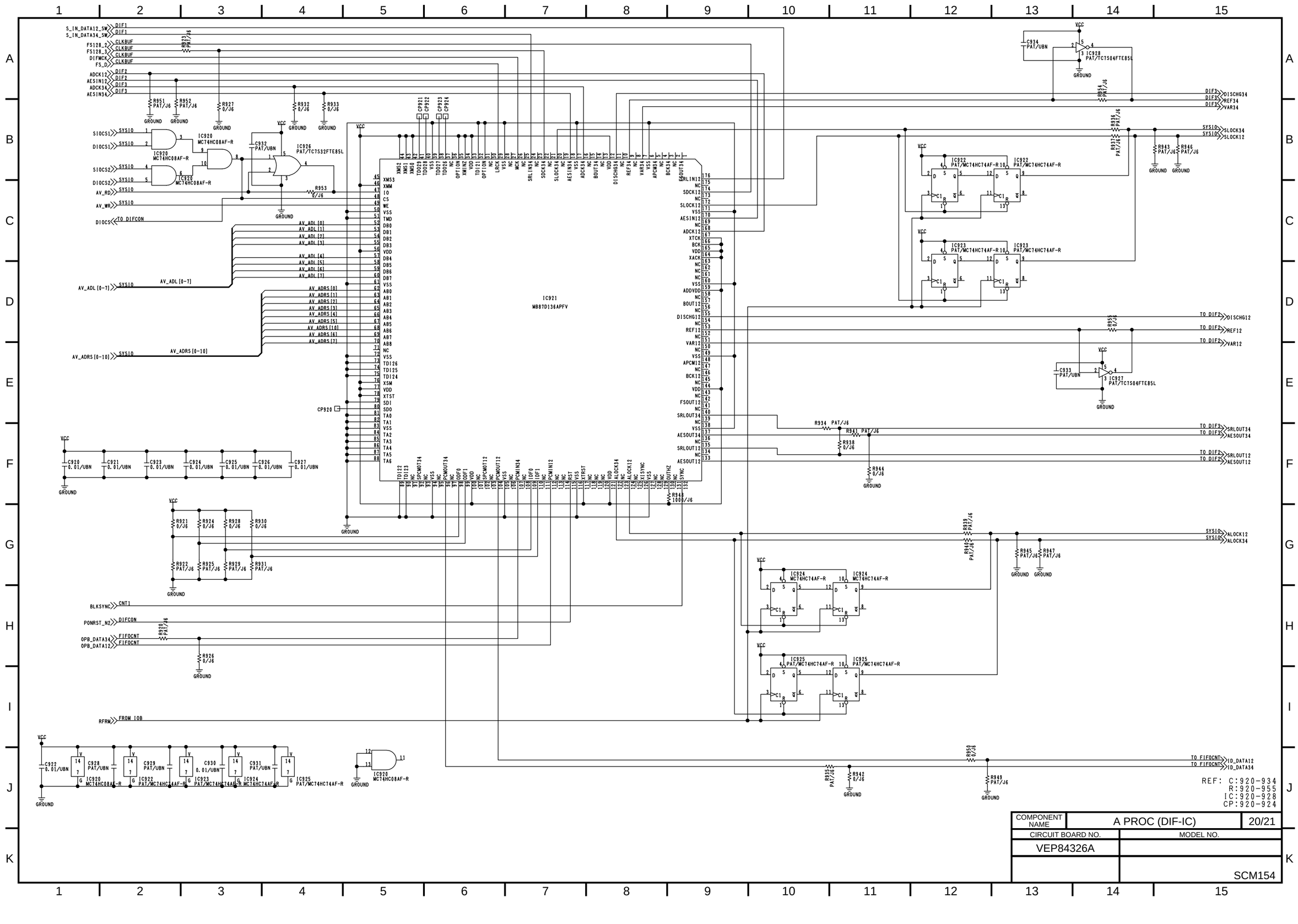

COMPONENT NAME	A PROC (DIF-IC)	20/21
CIRCUIT BOARD NO.	MODEL NO.	
VEP84326A		
		SCM154

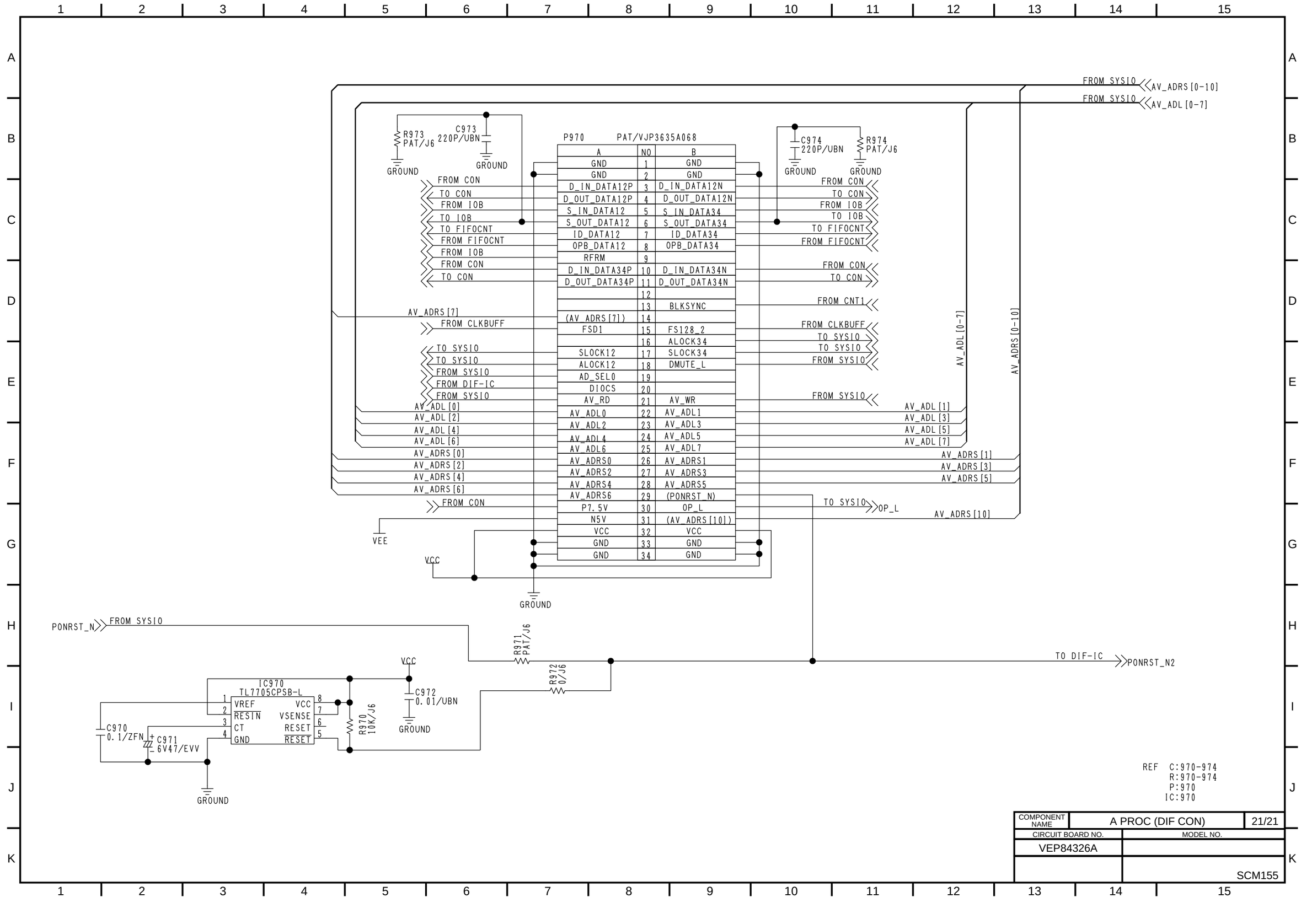
FROM SYSIO
AV_ADRS [0-10]
FROM SYSIO
AV_ADL [0-7]
R973
PAT/J6
C973
220P/UBN
GROUND
GROUND
P970
PAT/VJP3635A068
C974
220P/UBN
R974
PAT/J6
GROUND
GROUND
A
NO
B
GND 1 GND
GND 2 GND
D_IN_DATA12P 3 D_IN_DATA12N
D_OUT_DATA12P 4 D_OUT_DATA12N
S_IN_DATA12 5 S_IN_DATA34
S_OUT_DATA12 6 S_OUT_DATA34
ID_DATA12 7 ID_DATA34
OPB_DATA12 8 OPB_DATA34
RFRM 9
D_IN_DATA34P 10 D_IN_DATA34N
D_OUT_DATA34P 11 D_OUT_DATA34N
12
13 BLKSYNC
(AV_ADRS [7]) 14
FSD1 15 FS128_2
16 ALOCK34
SLOCK12 17 SLOCK34
ALOCK12 18 DMUTE_L
AD_SEL0 19
DIOCS 20
AV_RD 21 AV_WR
AV_ADL0 22 AV_ADL1
AV_ADL2 23 AV_ADL3
AV_ADL4 24 AV_ADL5
AV_ADL6 25 AV_ADL7
AV_ADRS0 26 AV_ADRS1
AV_ADRS2 27 AV_ADRS3
AV_ADRS4 28 AV_ADRS5
AV_ADRS6 29 (PONRST_N)
P7.5V 30 OP_L
N5V 31 (AV_ADRS [10])
VCC 32 VCC
GND 33 GND
GND 34 GND
FROM CON
TO CON
FROM IOB
TO IOB
TO FIFOCNT
FROM FIFOCNT
FROM IOB
FROM CON
TO CON
AV_ADRS [7]
FROM CLKBUFF
TO SYSIO
TO SYSIO
FROM SYSIO
FROM DIF-IC
FROM SYSIO
AV_ADL [0]
AV_ADL [2]
AV_ADL [4]
AV_ADL [6]
AV_ADRS [0]
AV_ADRS [2]
AV_ADRS [4]
AV_ADRS [6]
FROM CON
VEE
VCC
GROUND
FROM CON
TO CON
FROM IOB
TO IOB
TO FIFOCNT
FROM FIFOCNT
FROM CON
TO CON
FROM CNT1
FROM CLKBUFF
TO SYSIO
TO SYSIO
FROM SYSIO
FROM SYSIO
AV_ADL [1]
AV_ADL [3]
AV_ADL [5]
AV_ADL [7]
AV_ADRS [1]
AV_ADRS [3]
AV_ADRS [5]
TO SYSIO
OP_L
AV_ADRS [10]
AV_ADL [0-7]
AV_ADRS [0-10]
PONRST_N
FROM SYSIO
R971
PAT/J6
R972
0/J6
TO DIF-IC
PONRST_N2
VCC
IC970
TL7705CPSB-L
1 VREF
2 RESIN
3 CT
4 GND
8 VCC
7 VSENSE
6 RESET
5 RESET
C970
0.1/ZFN
C971
6V47/EVV
R970
10K/J6
C972
0.01/UBN
GROUND
GROUND
REF C:970-974
R:970-974
P:970
IC:970
COMPONENT NAME
A PROC (DIF CON)
21/21
CIRCUIT BOARD NO.
MODEL NO.
VEP84326A
SCM155

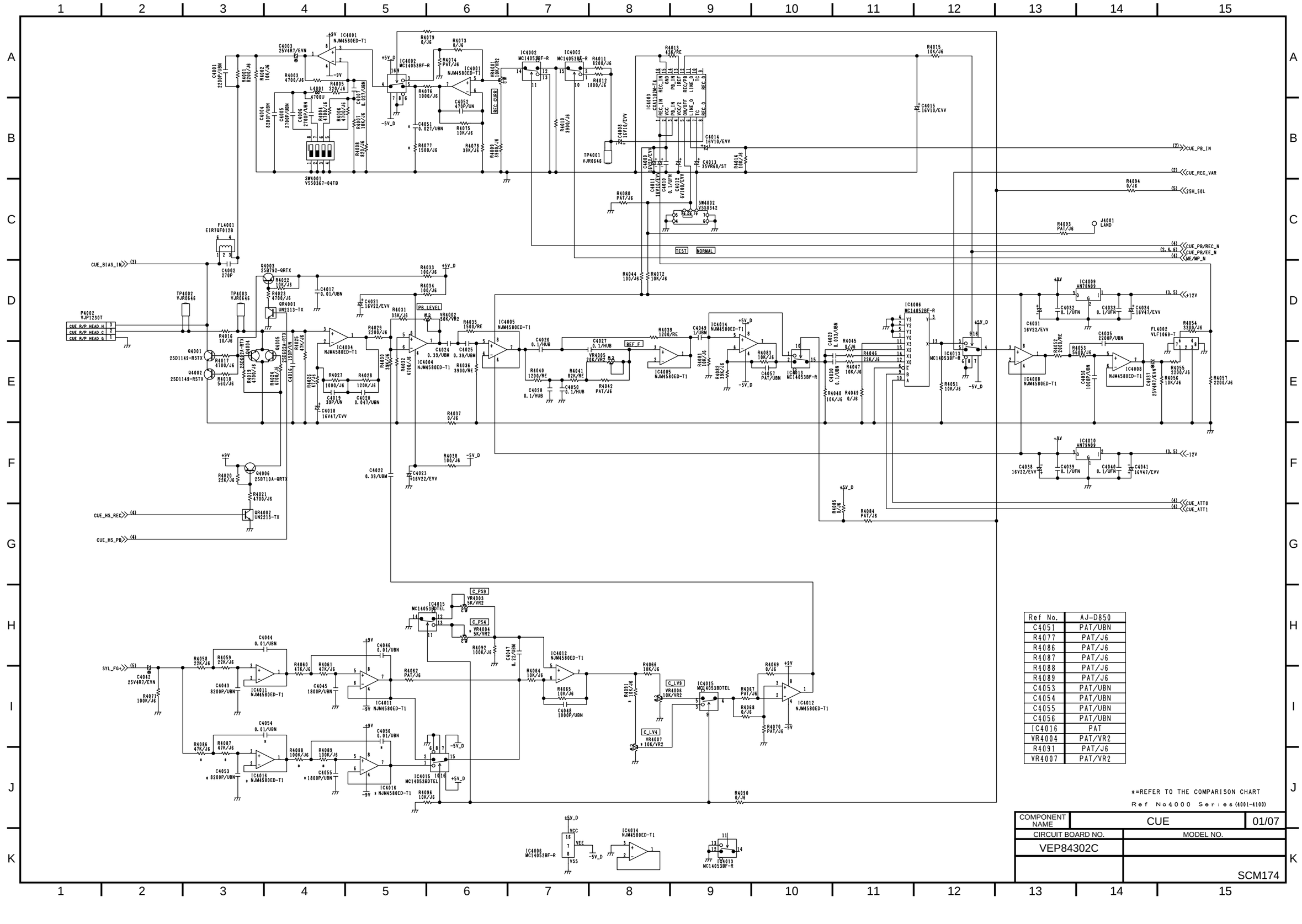

Ref No.	AJ-D850
C4051	PAT/UBN
R4077	PAT/J6
R4086	PAT/J6
R4087	PAT/J6
R4088	PAT/J6
R4089	PAT/J6
C4053	PAT/UBN
C4054	PAT/UBN
C4055	PAT/UBN
C4056	PAT/UBN
IC4016	PAT
VR4004	PAT/VR2
R4091	PAT/J6
VR4007	PAT/VR2

*=REFER TO THE COMPARISON CHART

Ref No4000 Series(4001-4100)

COMPONENT NAME	CUE	01/07
CIRCUIT BOARD NO.	MODEL NO.	
VEP84302C		
		SCM174

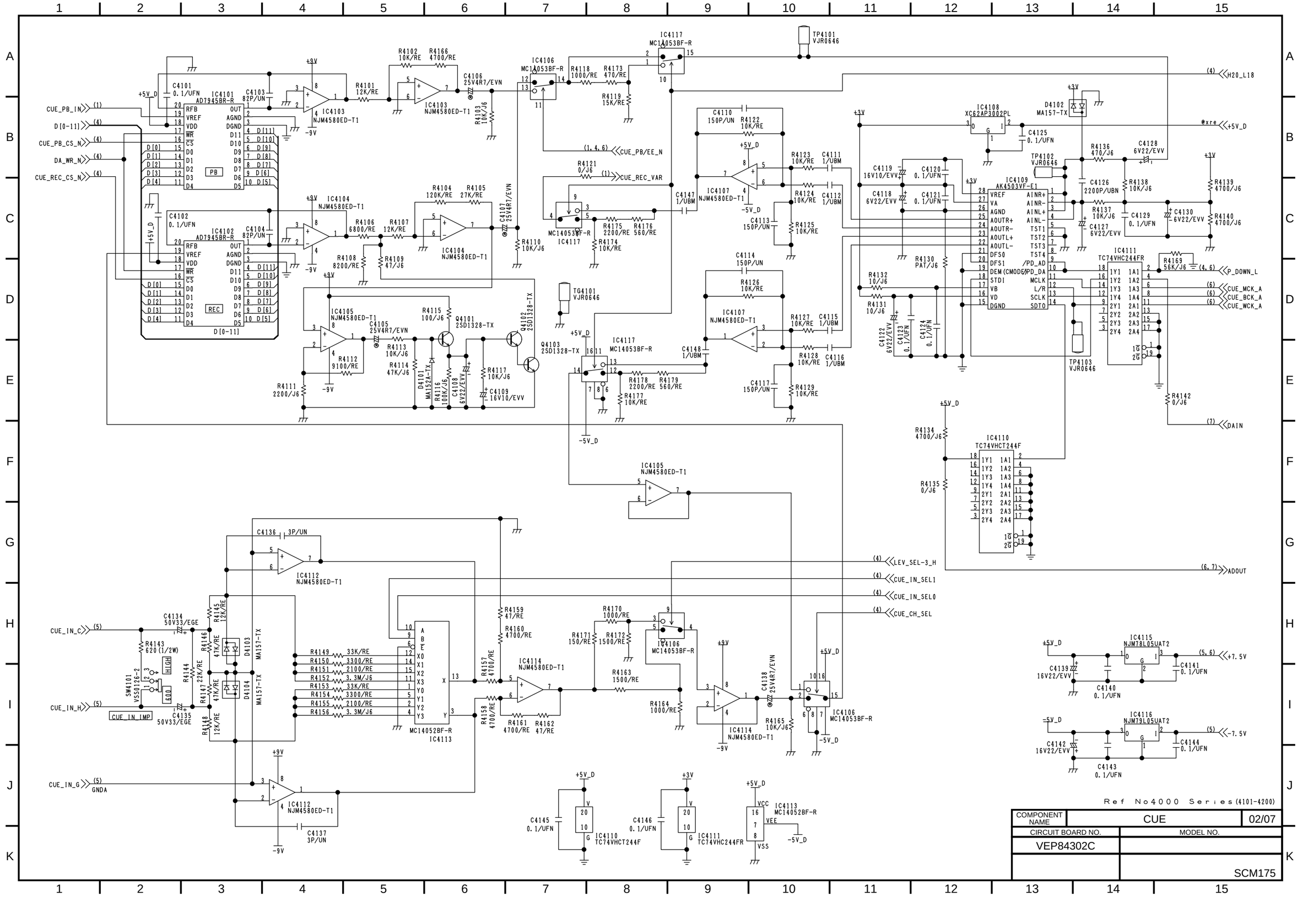
CUE_PB_IN
D[0-11]
CUE_PB_CS_N
DA_WR_N
CUE_REC_CS_N
AD7945BR-R
PB
REC
IC4101
IC4102
IC4103 NJM4580ED-T1
IC4104 NJM4580ED-T1
IC4105 NJM4580ED-T1
IC4106 MC14053BF-R
IC4107 NJM4580ED-T1
IC4108 XC62AP3002PL
IC4109 AK4503VF-E1
IC4110 TC74VHCT244F
IC4111 TC74VHC244FR
IC4112 NJM4580ED-T1
IC4113 MC14052BF-R
IC4114 NJM4580ED-T1
IC4115 NJM78L05UAT2
IC4116 NJM79L05UAT2
IC4117 MC14053BF-R
CUE_PB/EE_N
CUE_REC_VAR
H20_L18
+5V_D
@xre
P_DOWN_L
CUE_MCK_A
CUE_BCK_A
CUE_WCK_A
DAIN
ADOUT
LEV_SEL-3_H
CUE_IN_SEL1
CUE_IN_SEL0
CUE_CH_SEL
CUE_IN_C
CUE_IN_H
CUE_IN_IMP
CUE_IN_G
GNDA
+7.5V
-7.5V
TP4101 VJR0646
TP4102 VJR0646
TP4103 VJR0646
TG4101 VJR0646
D4101 MA152A-TX
D4102 MA157-TX
D4103 MA157-TX
D4104 MA157-TX
SW4101 VSS0126-2
HIGH
LOW
Ref No4000 Series(4101-4200)
COMPONENT NAME
CUE
02/07
CIRCUIT BOARD NO.
VEP84302C
MODEL NO.
SCM175

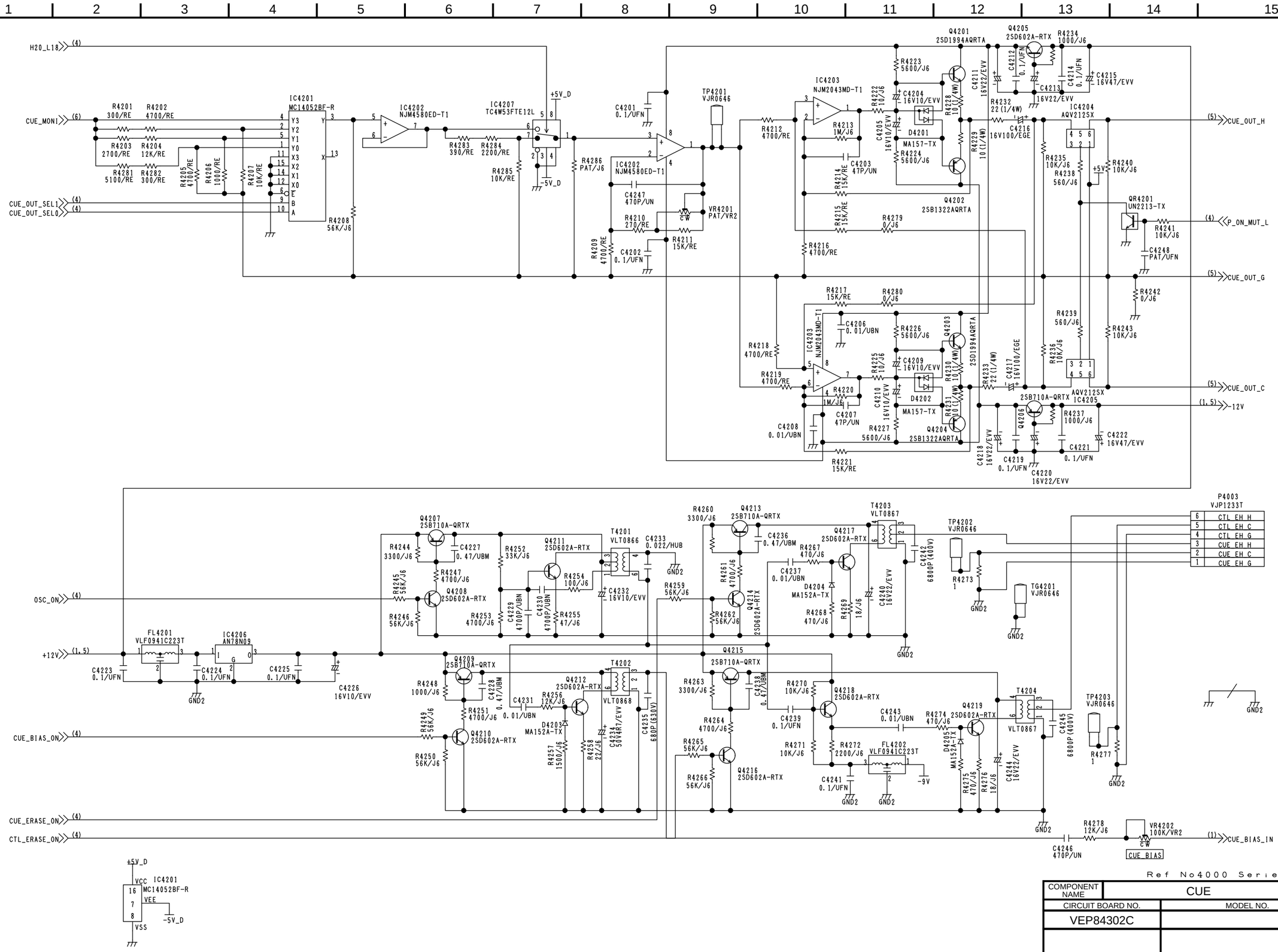

Ref No4000 Series(4201-4300)

COMPONENT NAME	CUE	03/07
CIRCUIT BOARD NO.	MODEL NO.	
VEP84302C		
	SCM176	

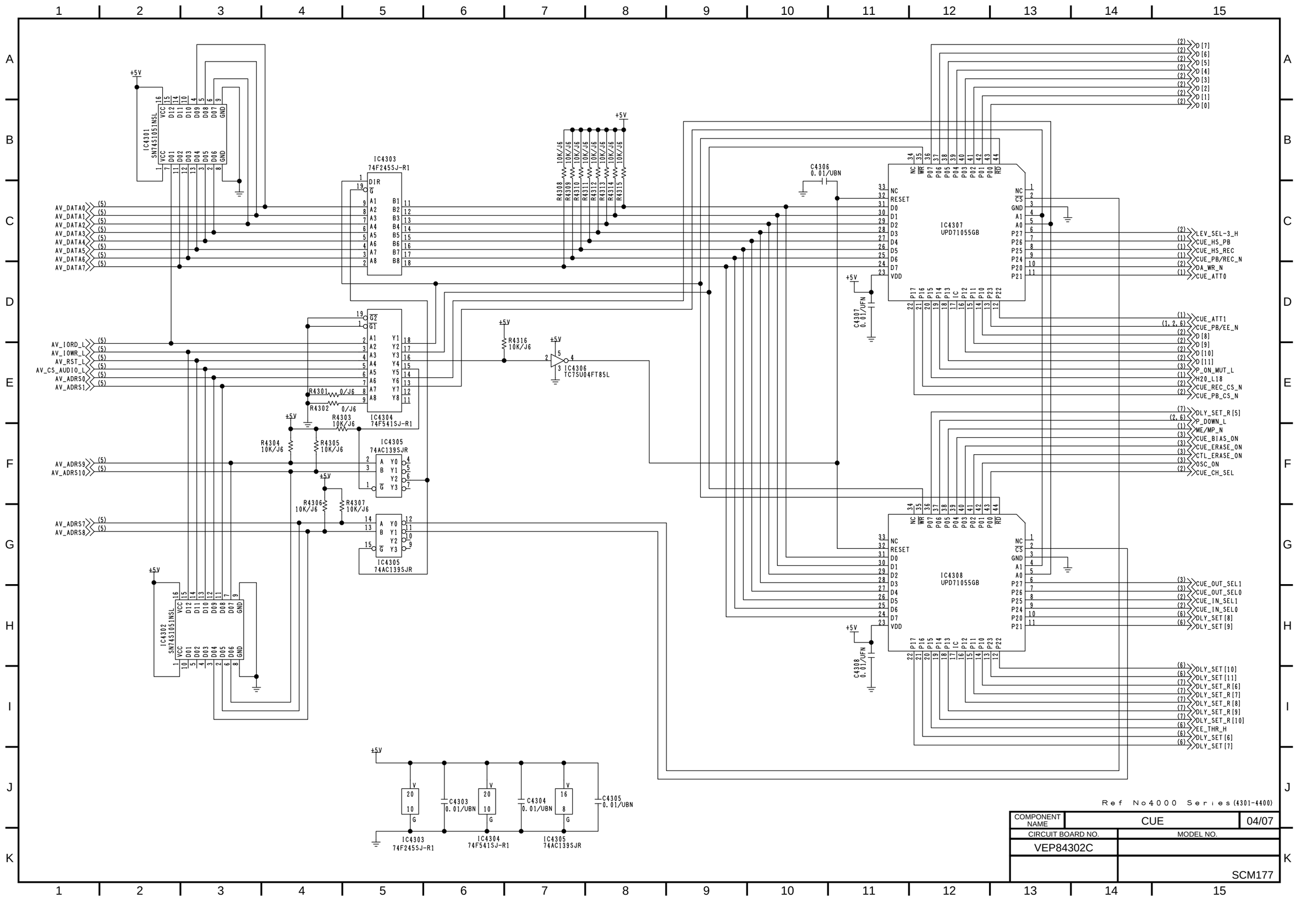
IC4301 SN74S1051NSL
IC4303 74F245SJ-R1
IC4307 UPD71055GB
IC4308 UPD71055GB
IC4302 SN74S1051NSL
IC4304 74F541SJ-R1
IC4305 74AC139SJR
IC4306 TC7SU04FT85L
C4306 0.01/UBN
C4307 0.01/UFN
C4308 0.01/UFN
C4303 0.01/UBN
C4304 0.01/UBN
C4305 0.01/UBN
R4301 0/J6
R4302 0/J6
R4303 10K/J6
R4304 10K/J6
R4305 10K/J6
R4306 10K/J6
R4307 10K/J6
R4308 10K/J6
R4309 10K/J6
R4310 10K/J6
R4311 10K/J6
R4312 10K/J6
R4313 10K/J6
R4314 10K/J6
R4315 10K/J6
R4316 10K/J6
+5V
AV_DATA0
AV_DATA1
AV_DATA2
AV_DATA3
AV_DATA4
AV_DATA5
AV_DATA6
AV_DATA7
AV_IORD_L
AV_IOWR_L
AV_RST_L
AV_CS_AUDIO_L
AV_ADRS0
AV_ADRS1
AV_ADRS9
AV_ADRS10
AV_ADRS7
AV_ADRS8
D [7]
D [6]
D [5]
D [4]
D [3]
D [2]
D [1]
D [0]
LEV_SEL-3_H
CUE_HS_PB
CUE_HS_REC
CUE_PB/REC_N
DA_WR_N
CUE_ATT0
CUE_ATT1
CUE_PB/EE_N
D [8]
D [9]
D [10]
D [11]
P_ON_MUT_L
H20_L18
CUE_REC_CS_N
CUE_PB_CS_N
DLY_SET_R [5]
P_DOWN_L
ME/MP_N
CUE_BIAS_ON
CUE_ERASE_ON
CTL_ERASE_ON
OSC_ON
CUE_CH_SEL
CUE_OUT_SEL1
CUE_OUT_SEL0
CUE_IN_SEL1
CUE_IN_SEL0
DLY_SET [8]
DLY_SET [9]
DLY_SET [10]
DLY_SET [11]
DLY_SET_R [6]
DLY_SET_R [7]
DLY_SET_R [8]
DLY_SET_R [9]
DLY_SET_R [10]
EE_THR_H
DLY_SET [6]
DLY_SET [7]
Ref No4000 Series(4301-4400)
COMPONENT NAME
CUE
04/07
CIRCUIT BOARD NO.
MODEL NO.
VEP84302C
SCM177

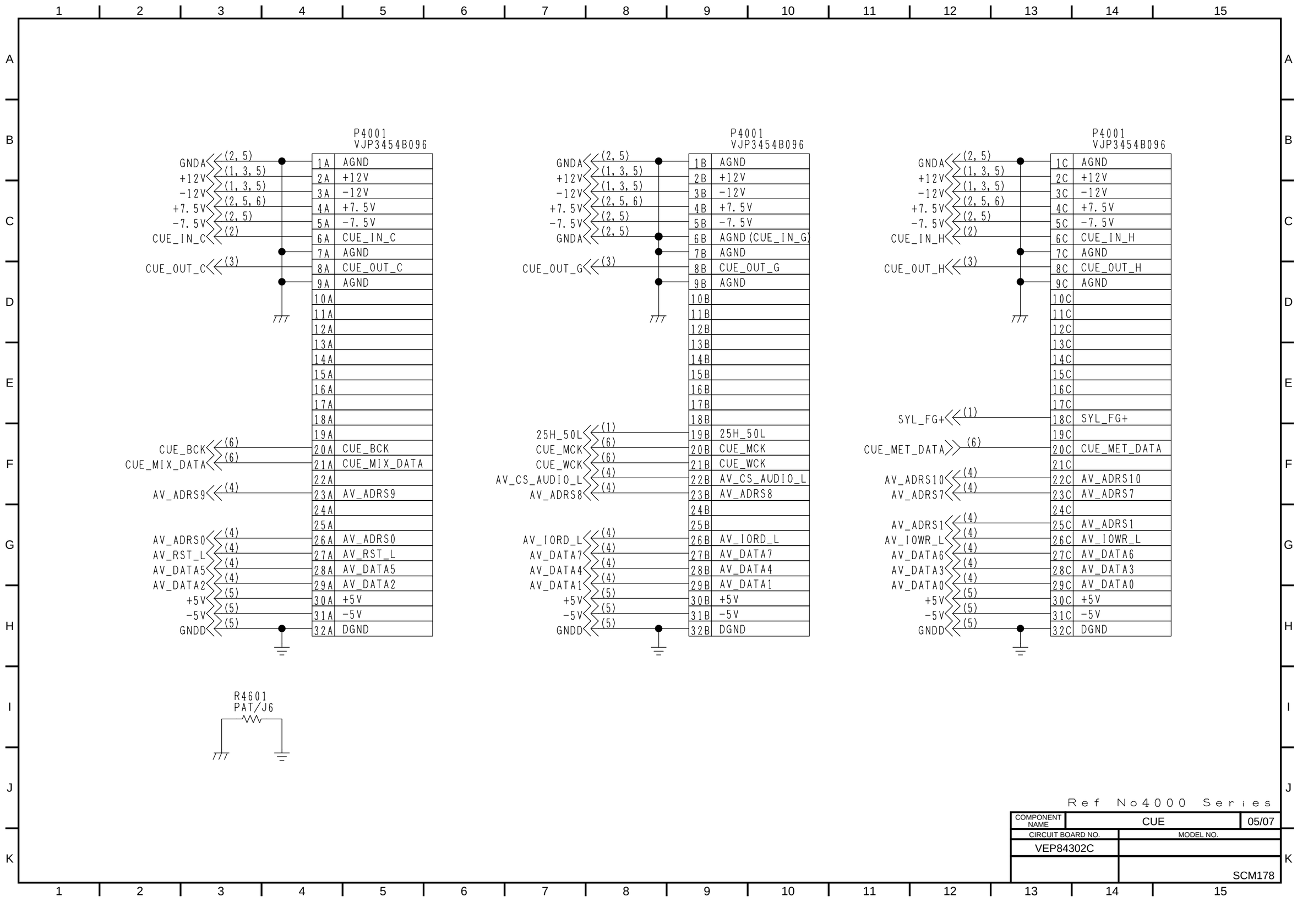

Ref No4000 Series

COMPONENT NAME	CUE	05/07
CIRCUIT BOARD NO.	MODEL NO.	
VEP84302C		
	SCM178	

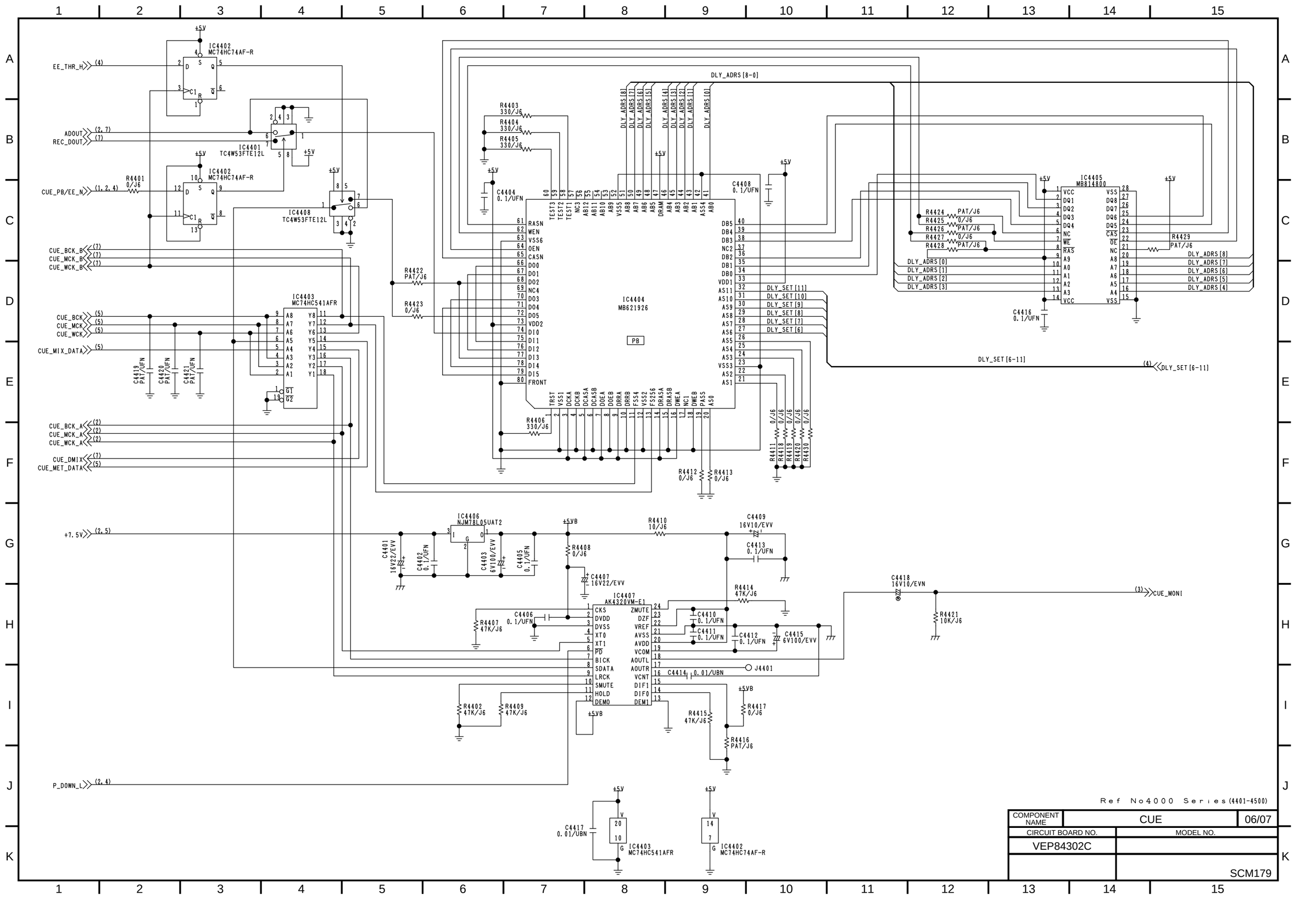

Ref No4000 Series(4401-4500)

COMPONENT NAME	CUE	06/07
CIRCUIT BOARD NO.	MODEL NO.	
VEP84302C		
		SCM179

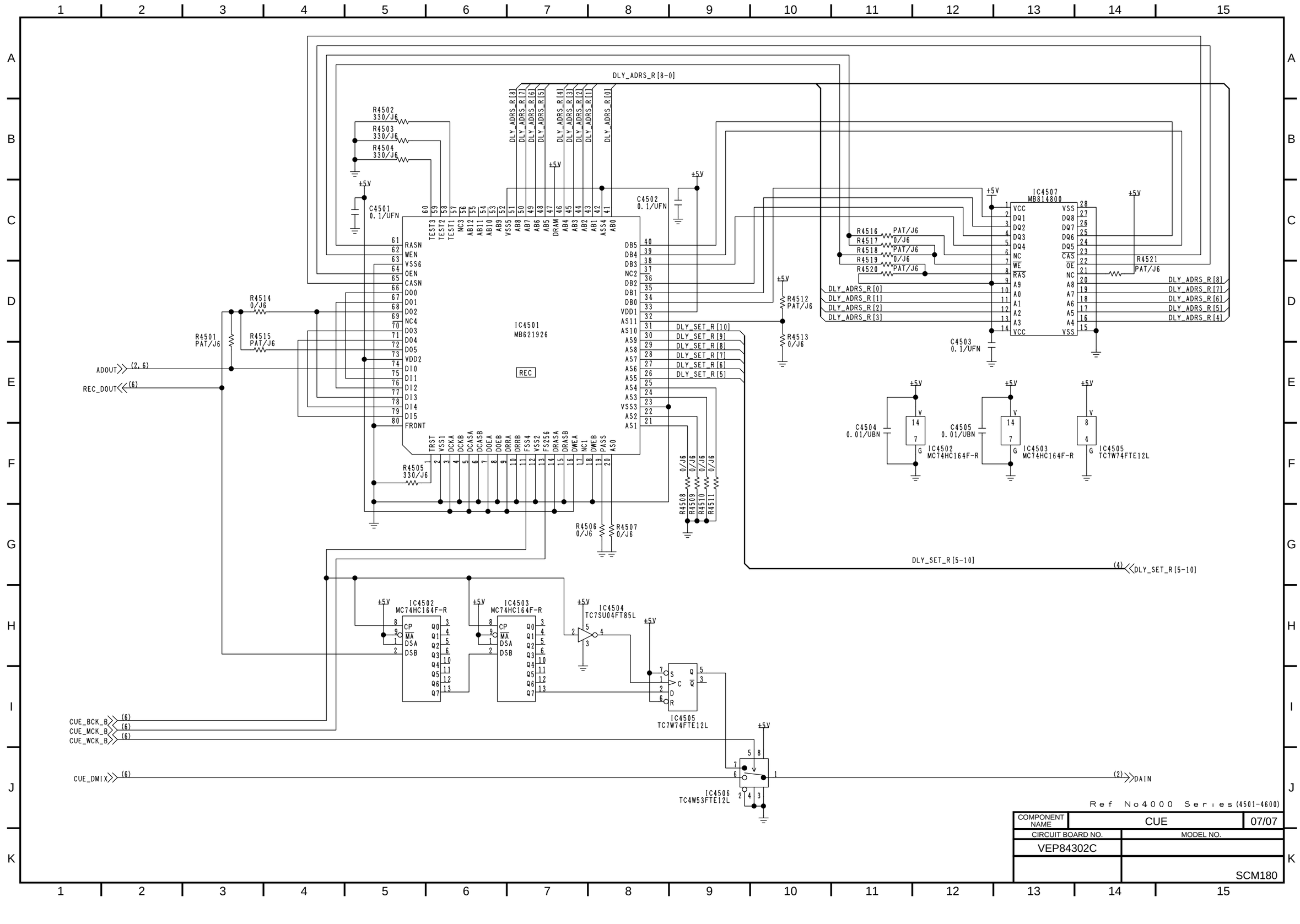
DLY_ADRS_R[8-0]
IC4501
MB621926
REC
C4501
0.1/UFN
C4502
0.1/UFN
C4503
0.1/UFN
IC4507
MB814800
R4501
PAT/J6
R4502
330/J6
R4503
330/J6
R4504
330/J6
R4505
330/J6
R4506
0/J6
R4507
0/J6
R4508
0/J6
R4509
0/J6
R4510
0/J6
R4511
0/J6
R4512
PAT/J6
R4513
0/J6
R4514
0/J6
R4515
PAT/J6
R4516
PAT/J6
R4517
0/J6
R4518
PAT/J6
R4519
0/J6
R4520
PAT/J6
R4521
PAT/J6
ADOUT
REC_DOUT
DLY_SET_R[10]
DLY_SET_R[9]
DLY_SET_R[8]
DLY_SET_R[7]
DLY_SET_R[6]
DLY_SET_R[5]
DLY_ADRS_R[0]
DLY_ADRS_R[1]
DLY_ADRS_R[2]
DLY_ADRS_R[3]
DLY_ADRS_R[4]
DLY_ADRS_R[5]
DLY_ADRS_R[6]
DLY_ADRS_R[7]
DLY_ADRS_R[8]
C4504
0.01/UBN
C4505
0.01/UBN
IC4502
MC74HC164F-R
IC4503
MC74HC164F-R
IC4505
TC7W74FTE12L
IC4502
MC74HC164F-R
IC4503
MC74HC164F-R
IC4504
TC7SU04FT85L
IC4505
TC7W74FTE12L
IC4506
TC4W53FTE12L
CUE_BCK_B
CUE_MCK_B
CUE_WCK_B
CUE_DMIX
DLY_SET_R[5-10]
DLY_SET_R[5-10]
DAIN
Ref No4000 Series(4501-4600)
COMPONENT NAME
CUE
07/07
CIRCUIT BOARD NO.
VEP84302C
MODEL NO.
SCM180

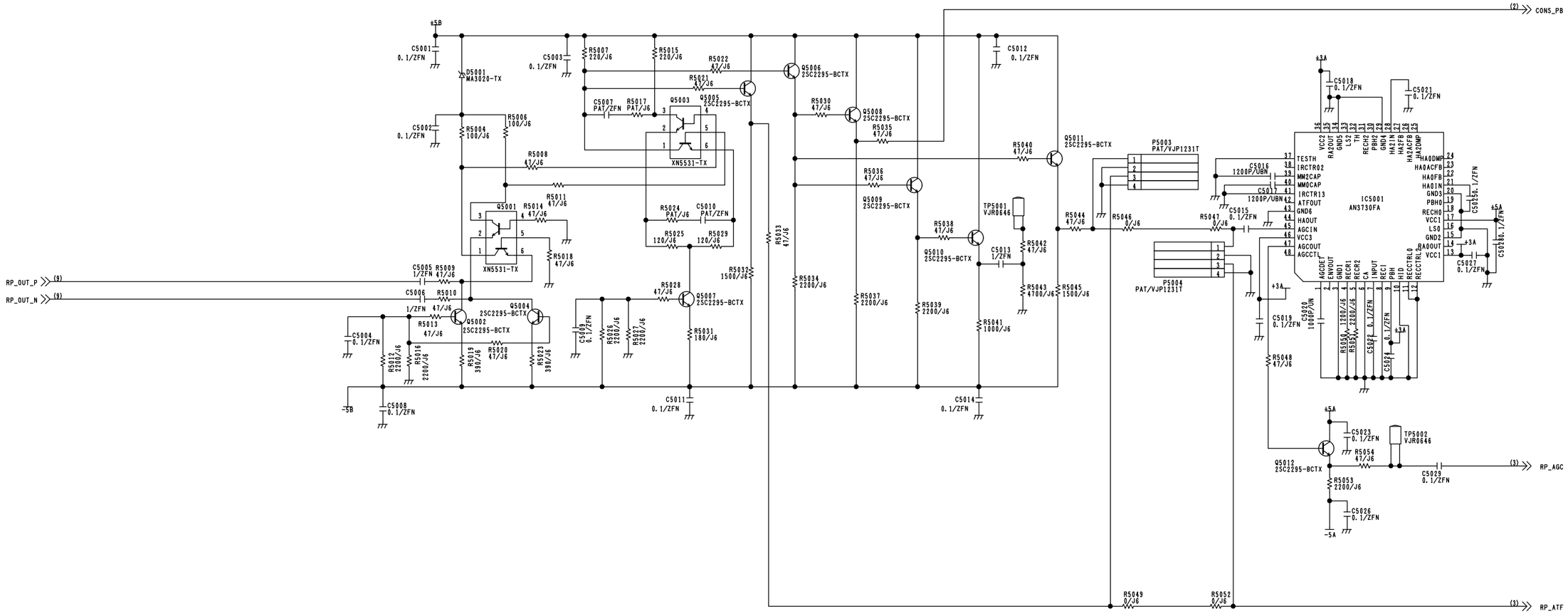

COMPONENT NAME	EQ	01/09
CIRCUIT BOARD NO.	MODEL NO.	
VEP85048A		
	SCM181	

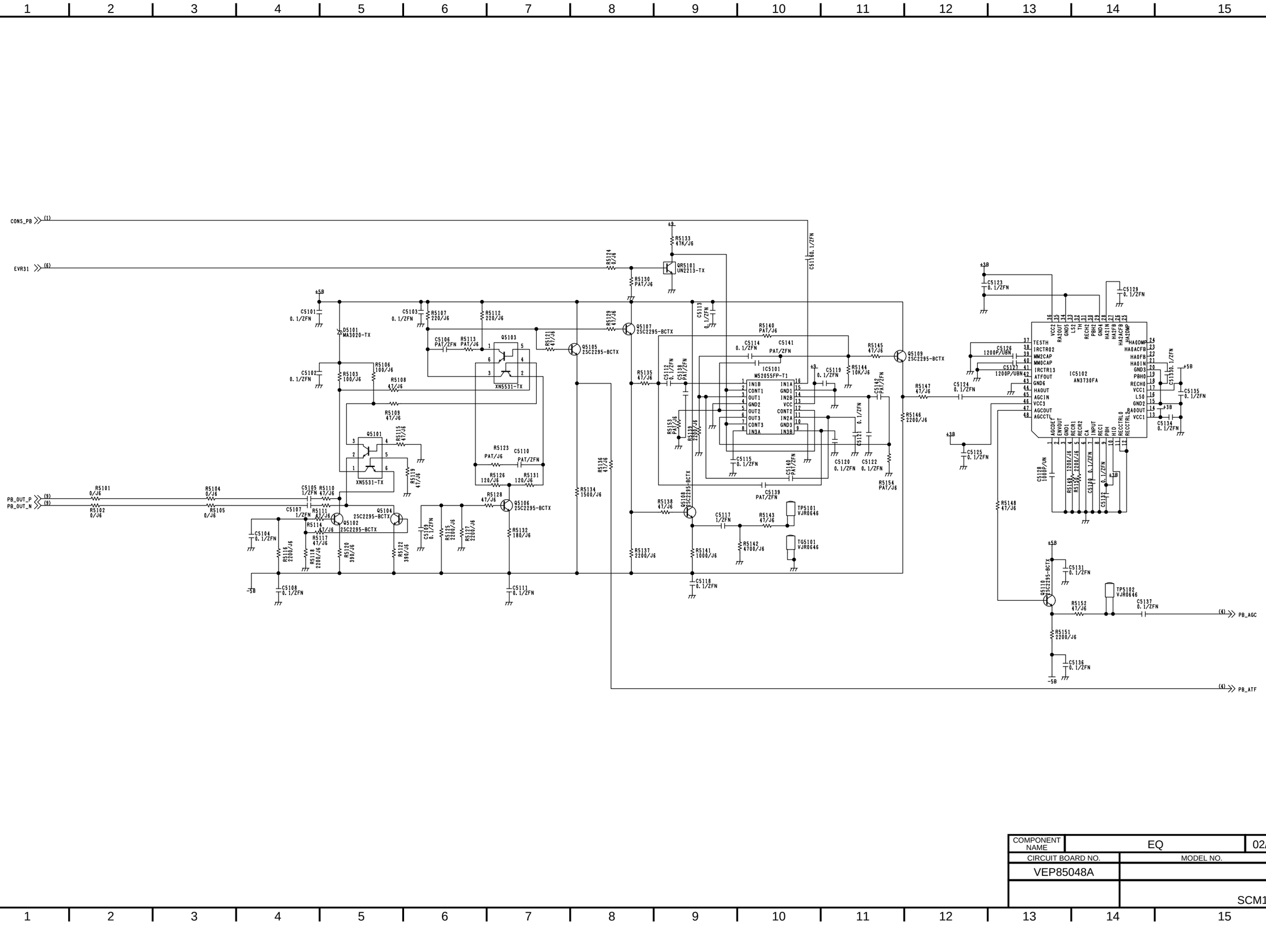

COMPONENT NAME	EQ	02/09
CIRCUIT BOARD NO.	MODEL NO.	
VEP85048A		
		SCM182

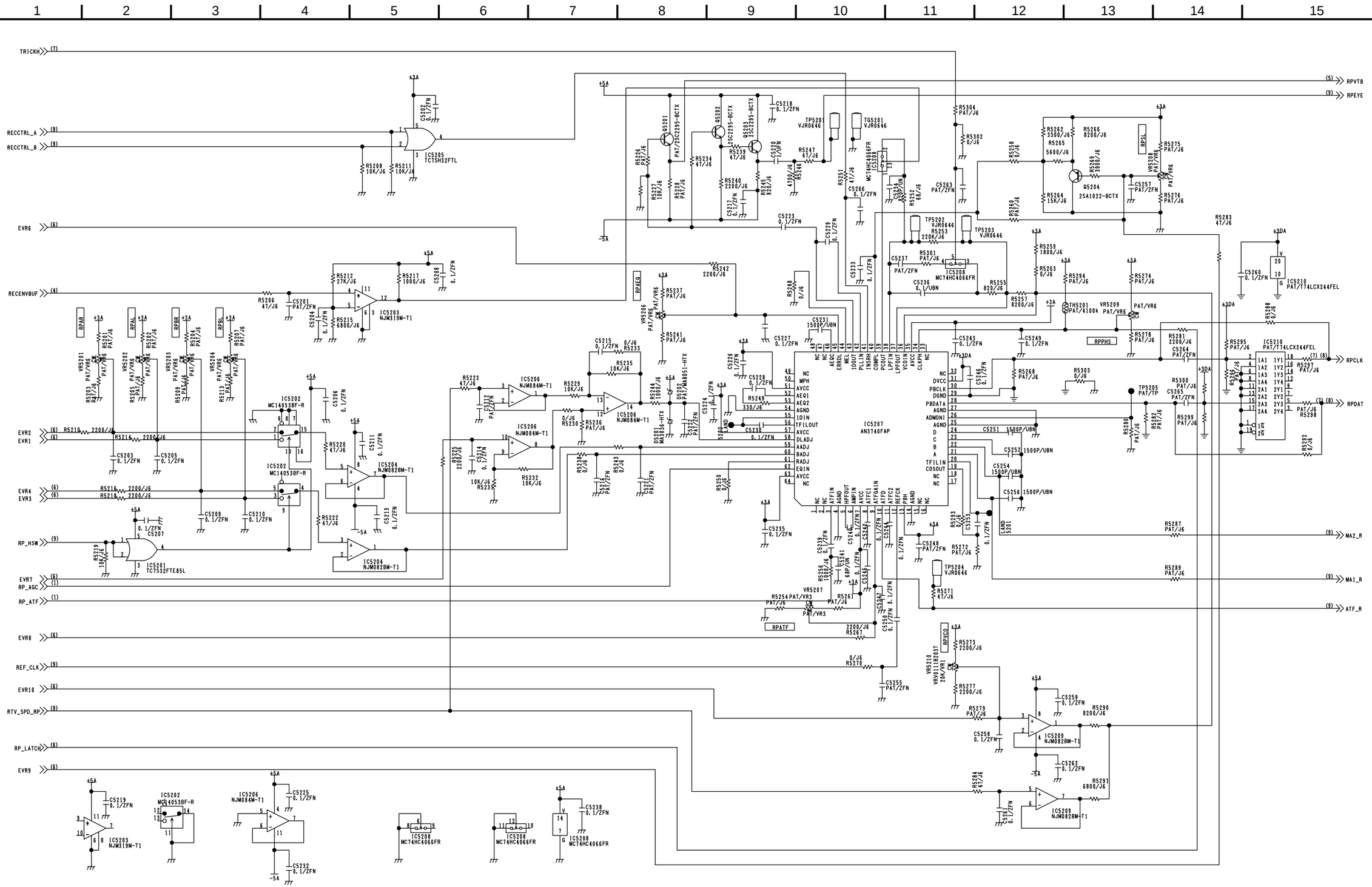

COMPONENT NAME	EQ	03/09
CIRCUIT BOARD NO.	MODEL NO.	
VEP85048A		
	SCM183	

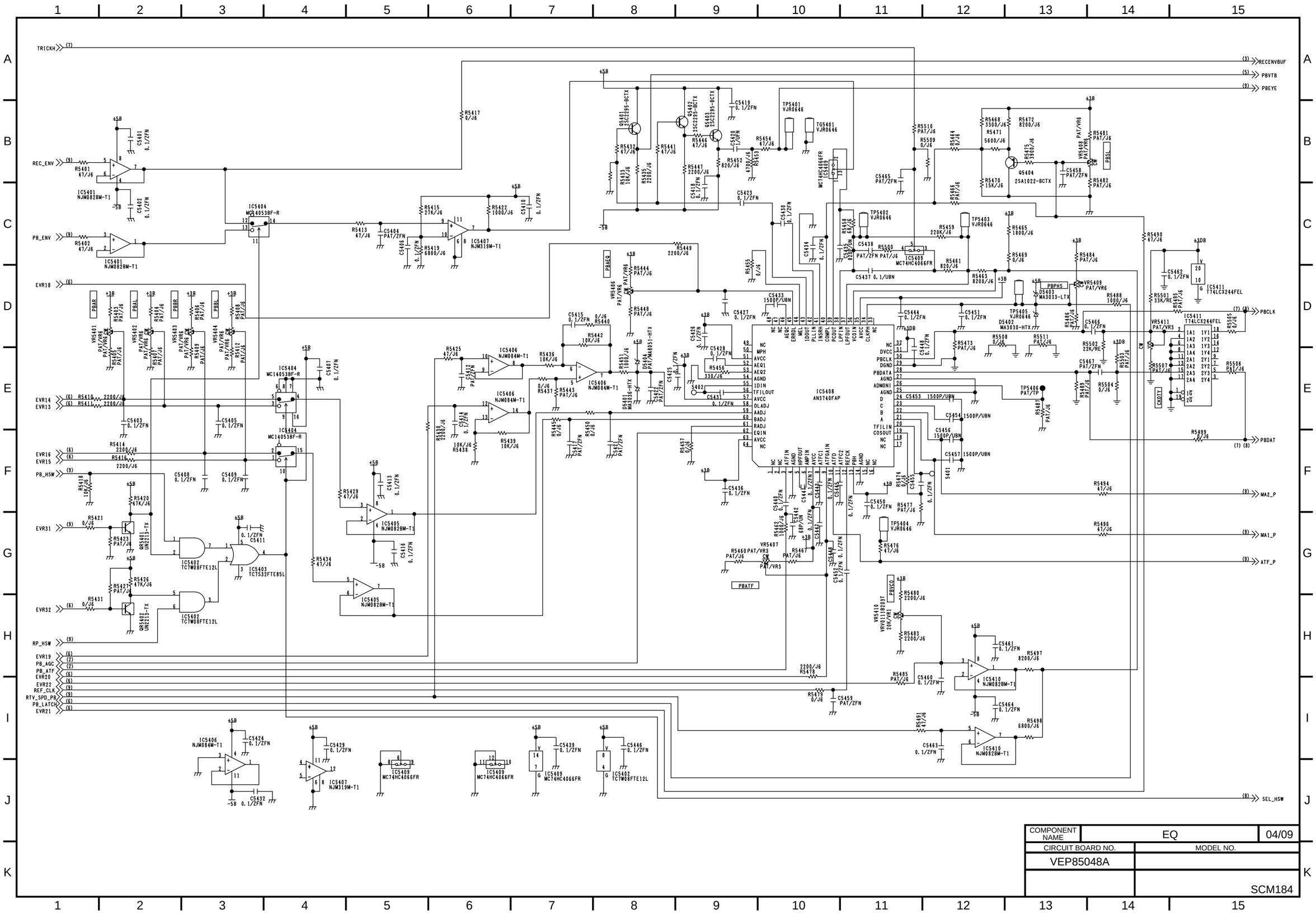

COMPONENT NAME	EQ	04/09
CIRCUIT BOARD NO.	MODEL NO.	
VEP85048A		
	SCM184	

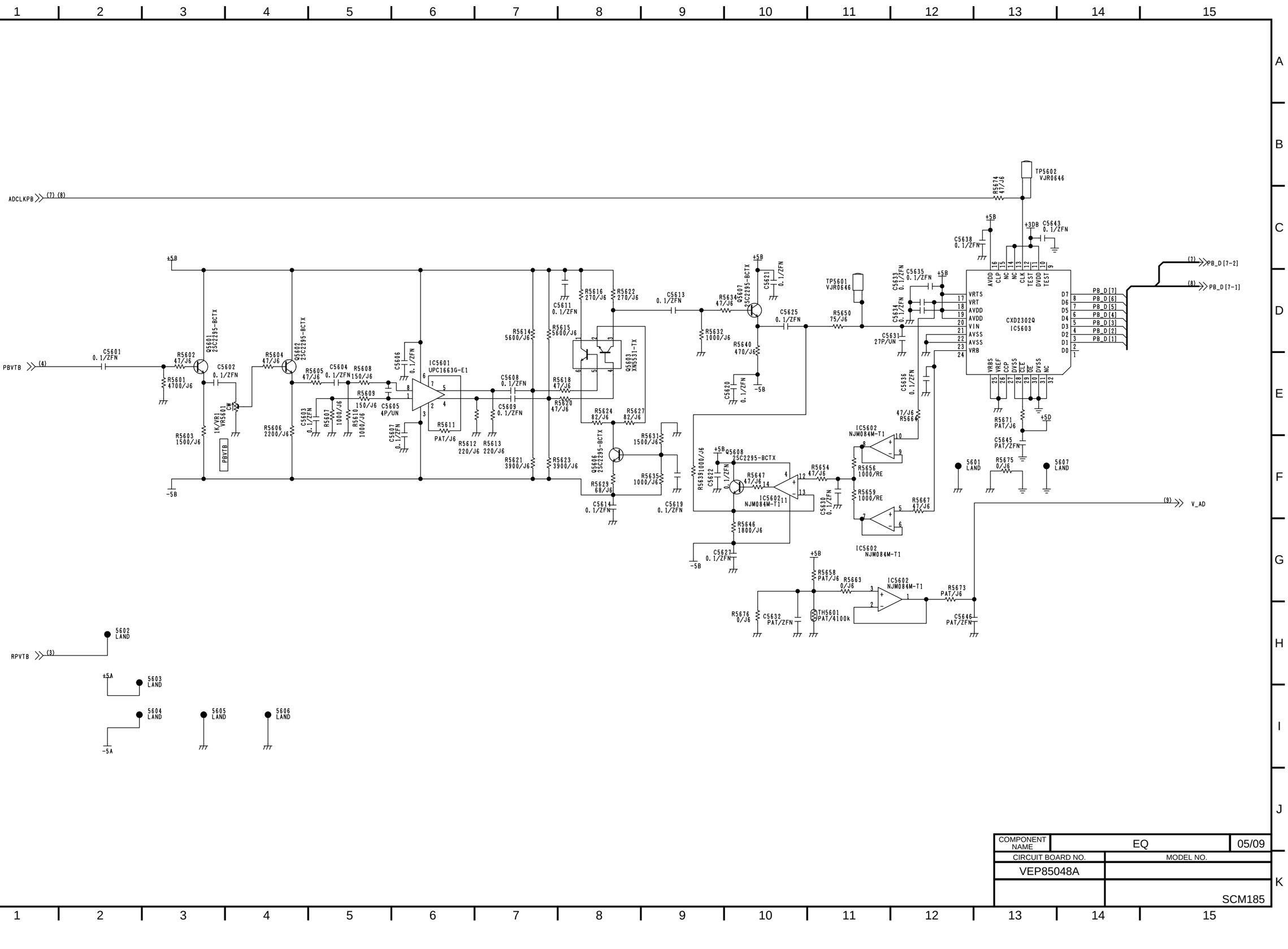

COMPONENT NAME	EQ	05/09
CIRCUIT BOARD NO.	MODEL NO.	
VEP85048A		
	SCM185	

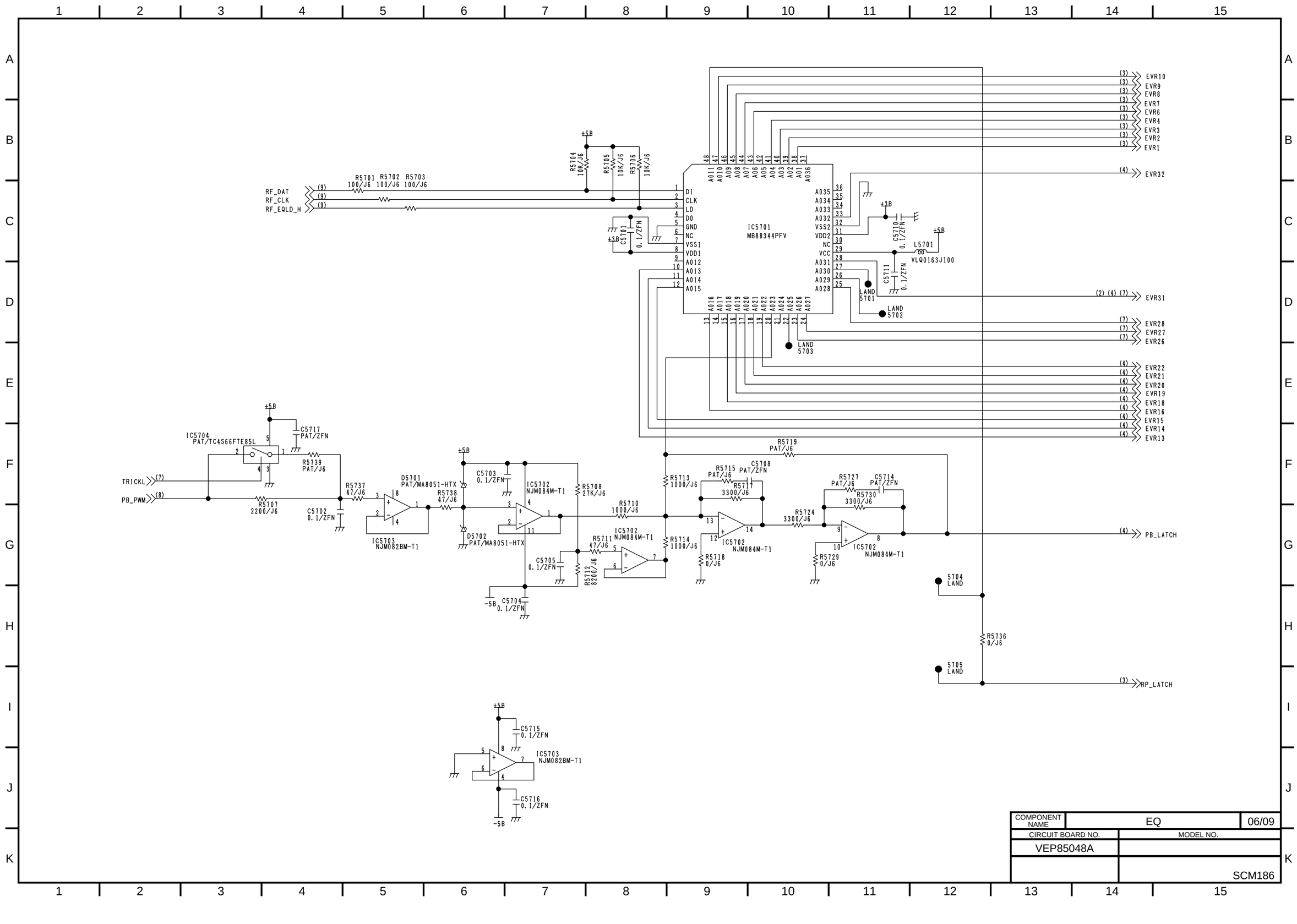

COMPONENT NAME	EQ	06/09
CIRCUIT BOARD NO.	MODEL NO.	
VEP85048A		
	SCM186	

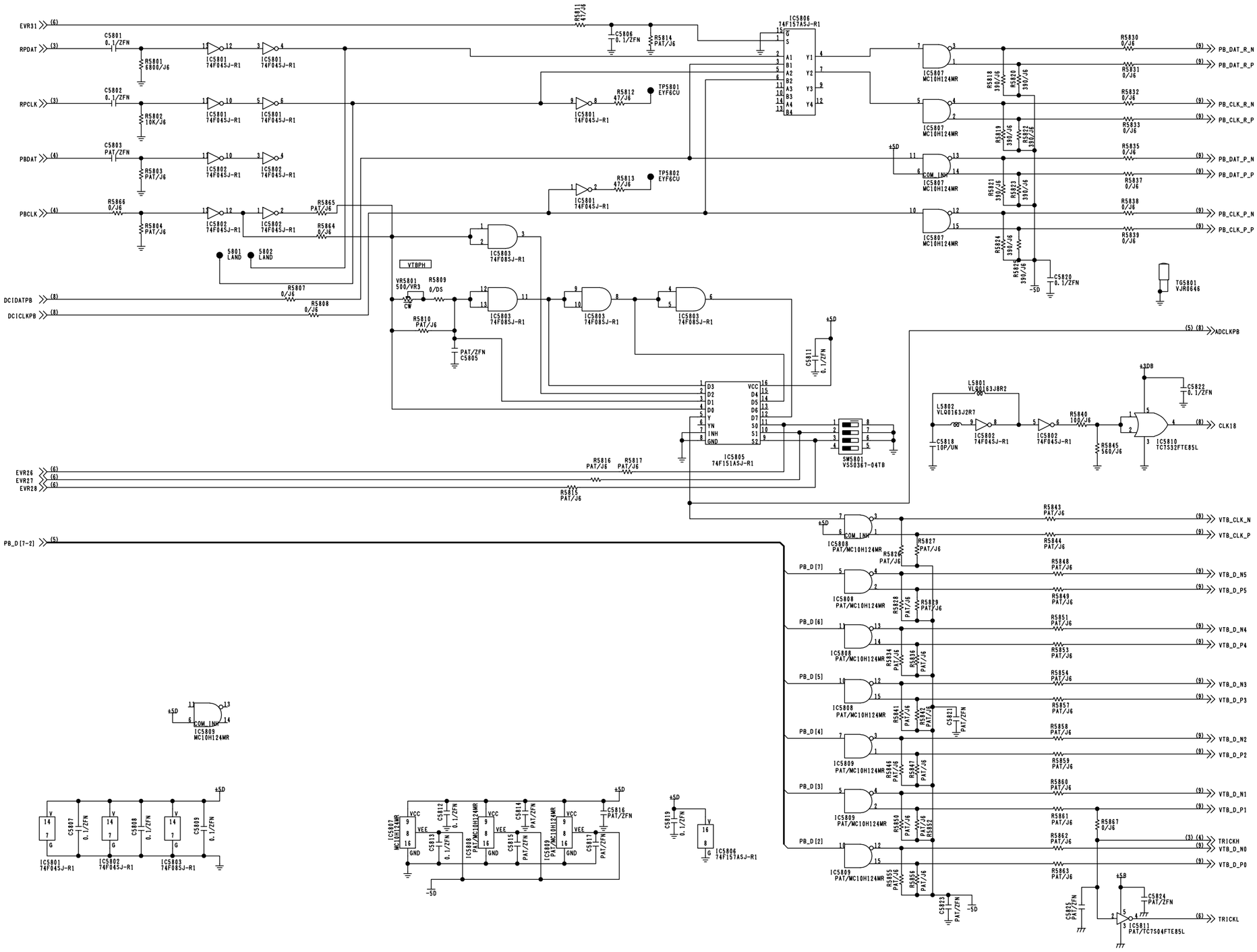

COMPONENT NAME	EQ	07/09
CIRCUIT BOARD NO.	MODEL NO.	
VEP85048A		
		SCM187

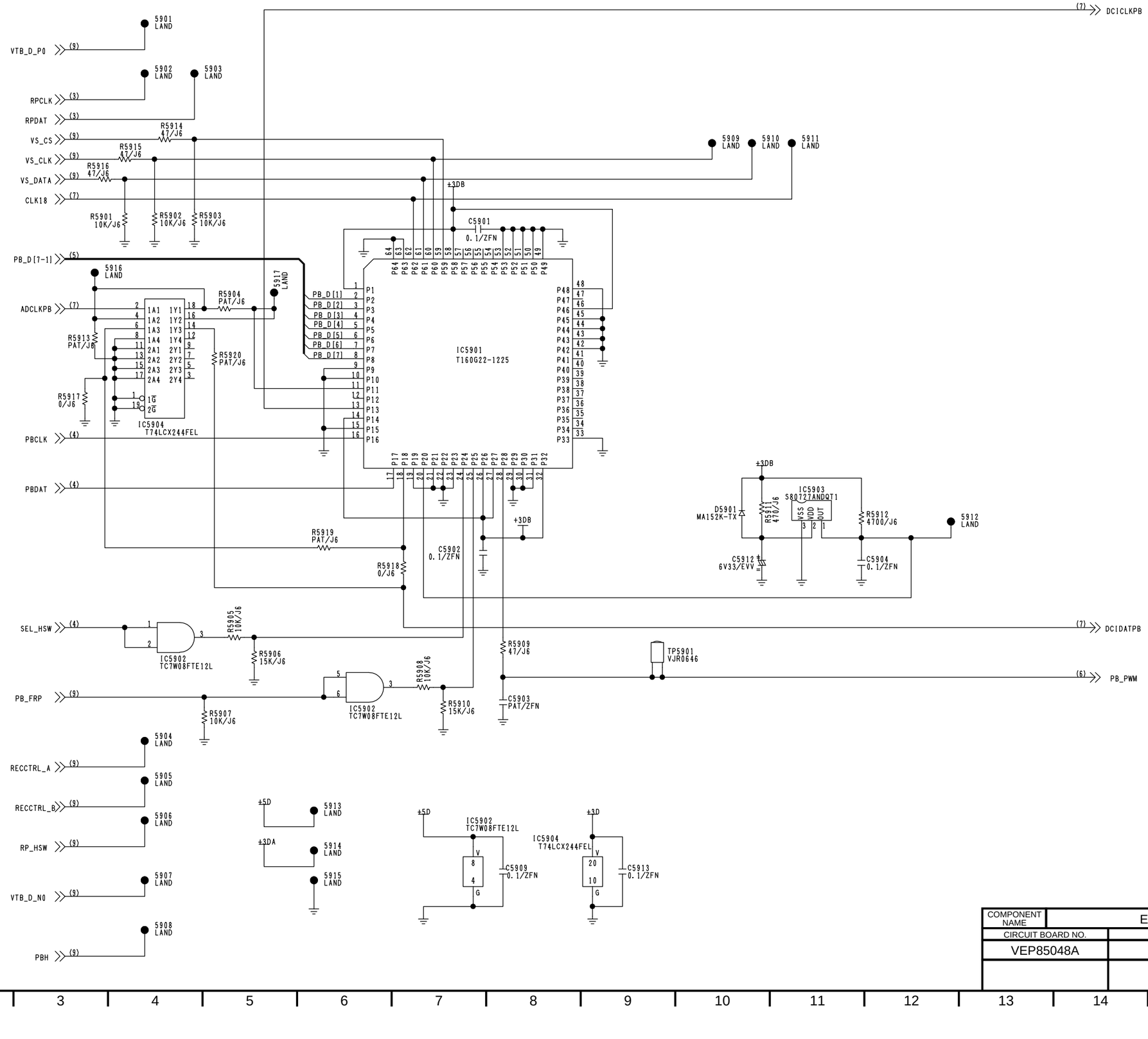

COMPONENT NAME	EQ	08/09
CIRCUIT BOARD NO.	MODEL NO.	
VEP85048A		
	SCM188	

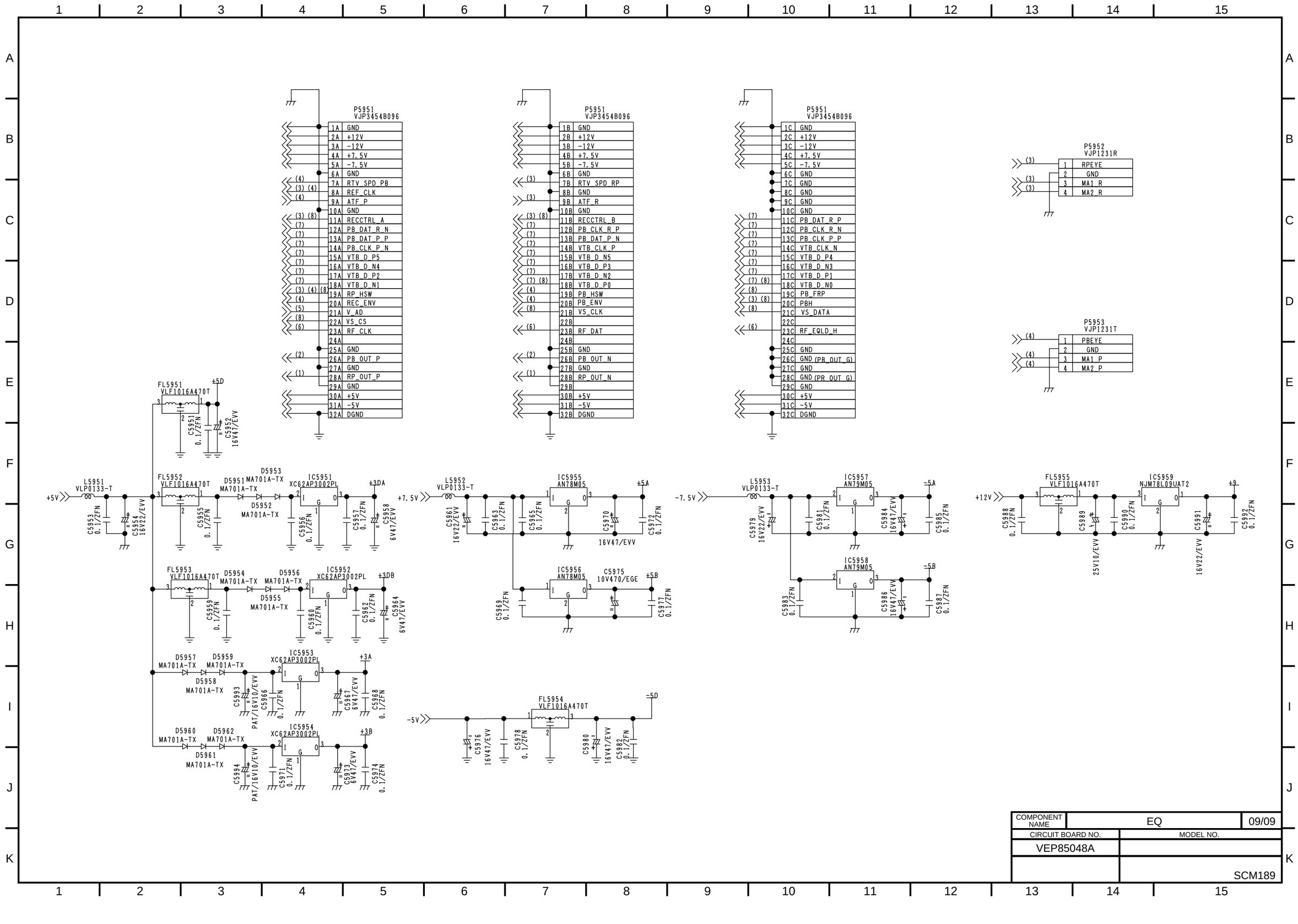

COMPONENT NAME	EQ	09/09
CIRCUIT BOARD NO.	MODEL NO.	
VEP85048A		
	SCM189	

F1 SERVO BLOCK DIAGRAM

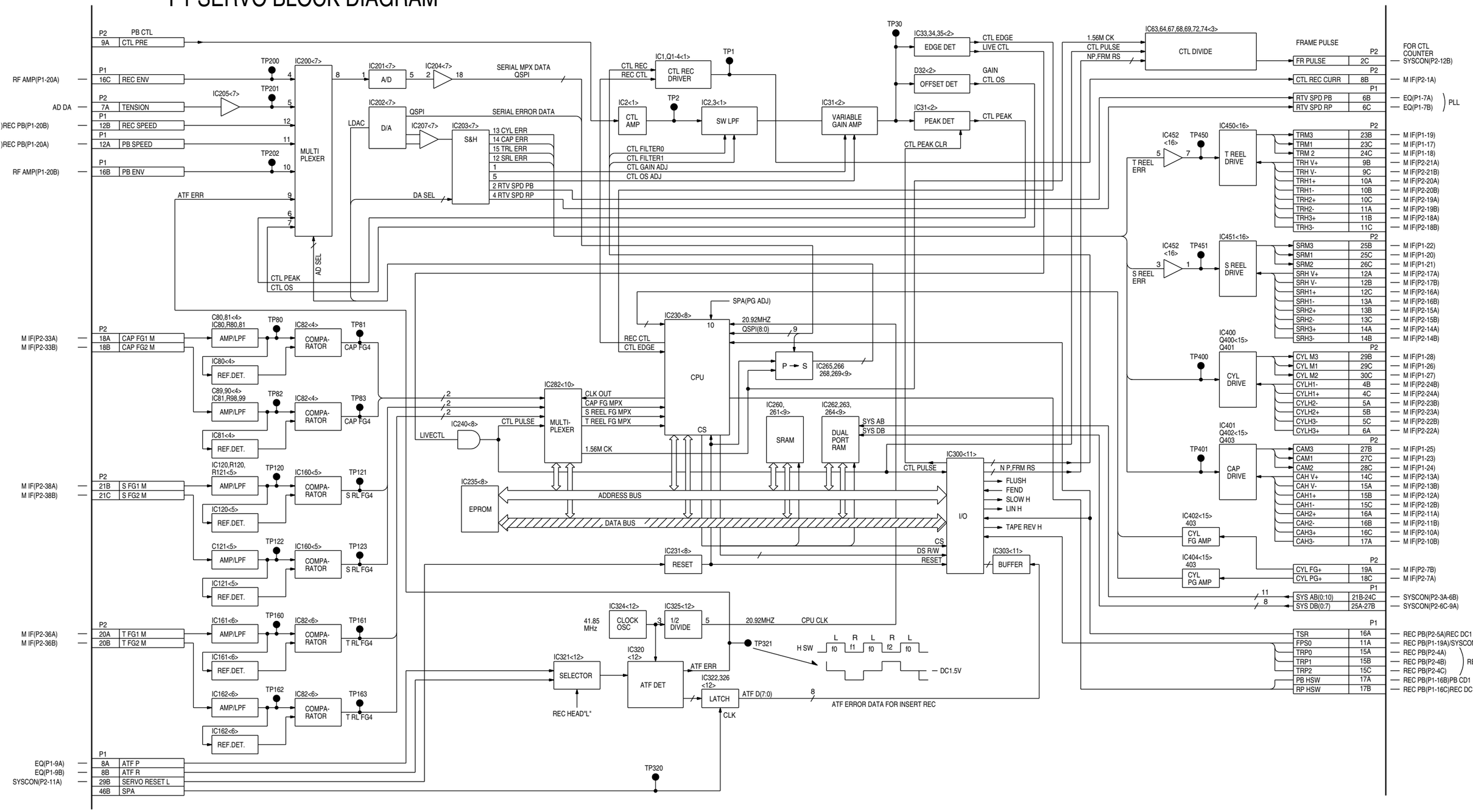

F2 SYSCON BLOCK DIAGRAM

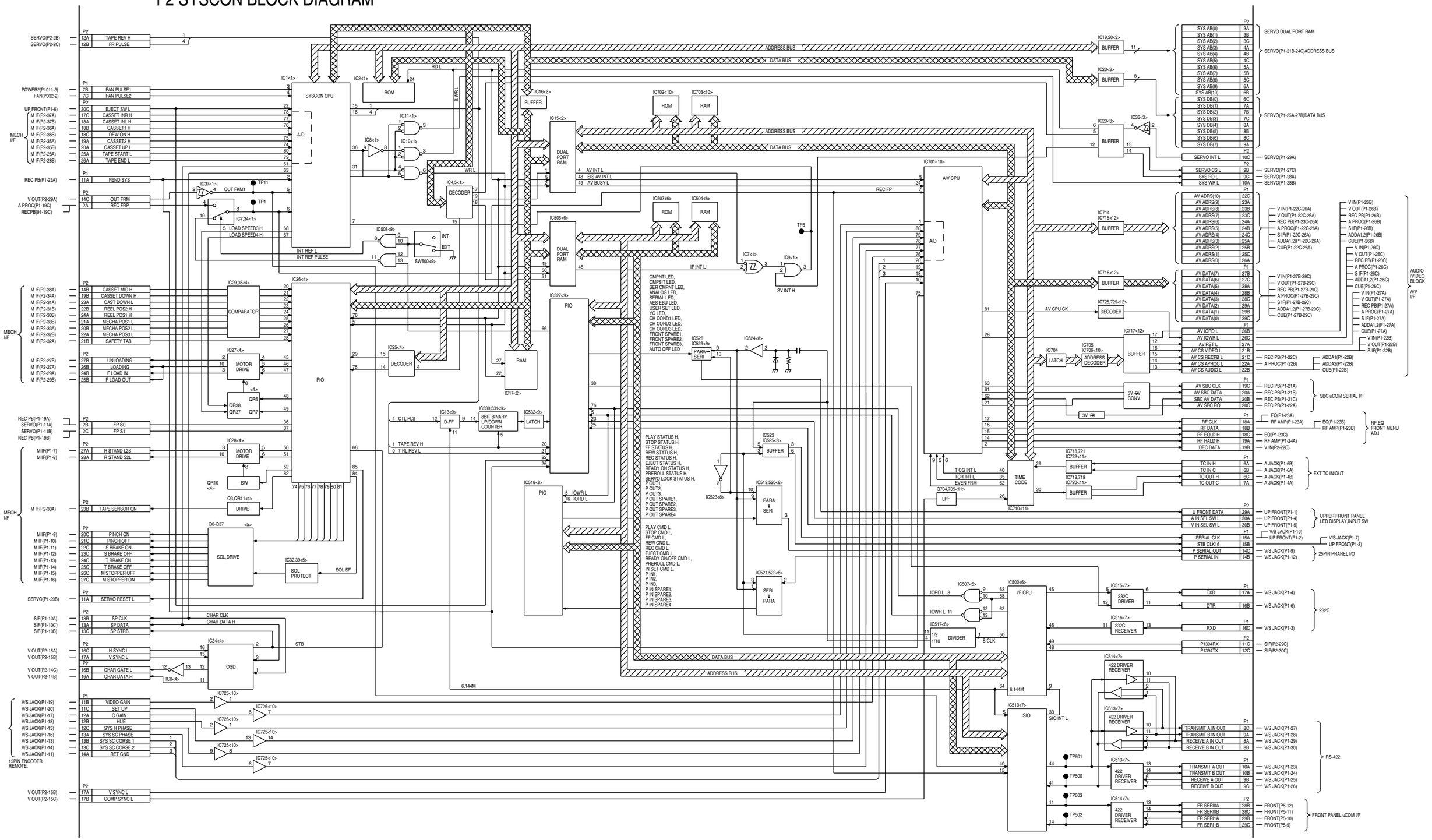

F4 V-OUT BLOCK DIAGRAM(1/2)

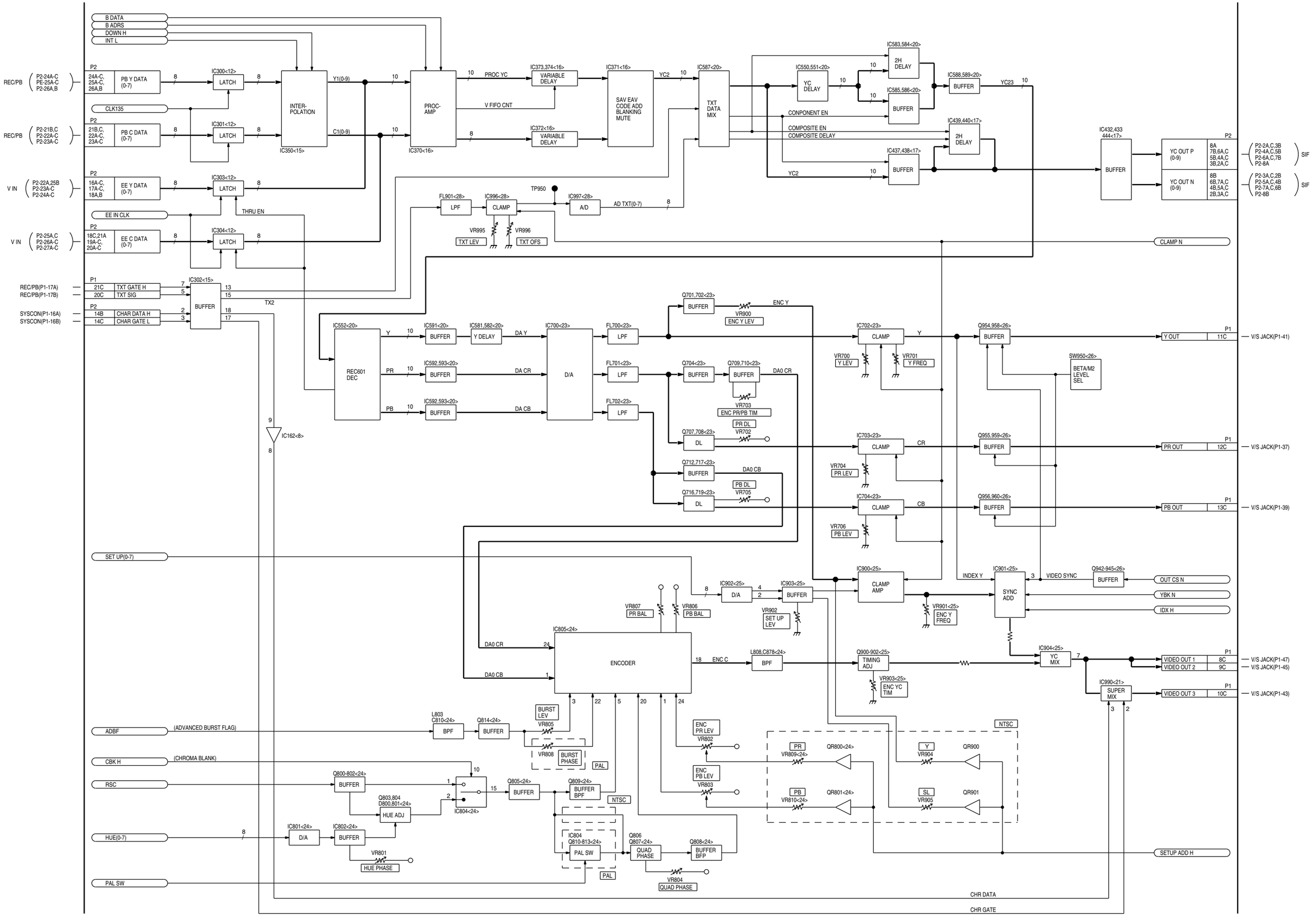

F4 V-OUT BLOCK DIAGRAM(2/2)

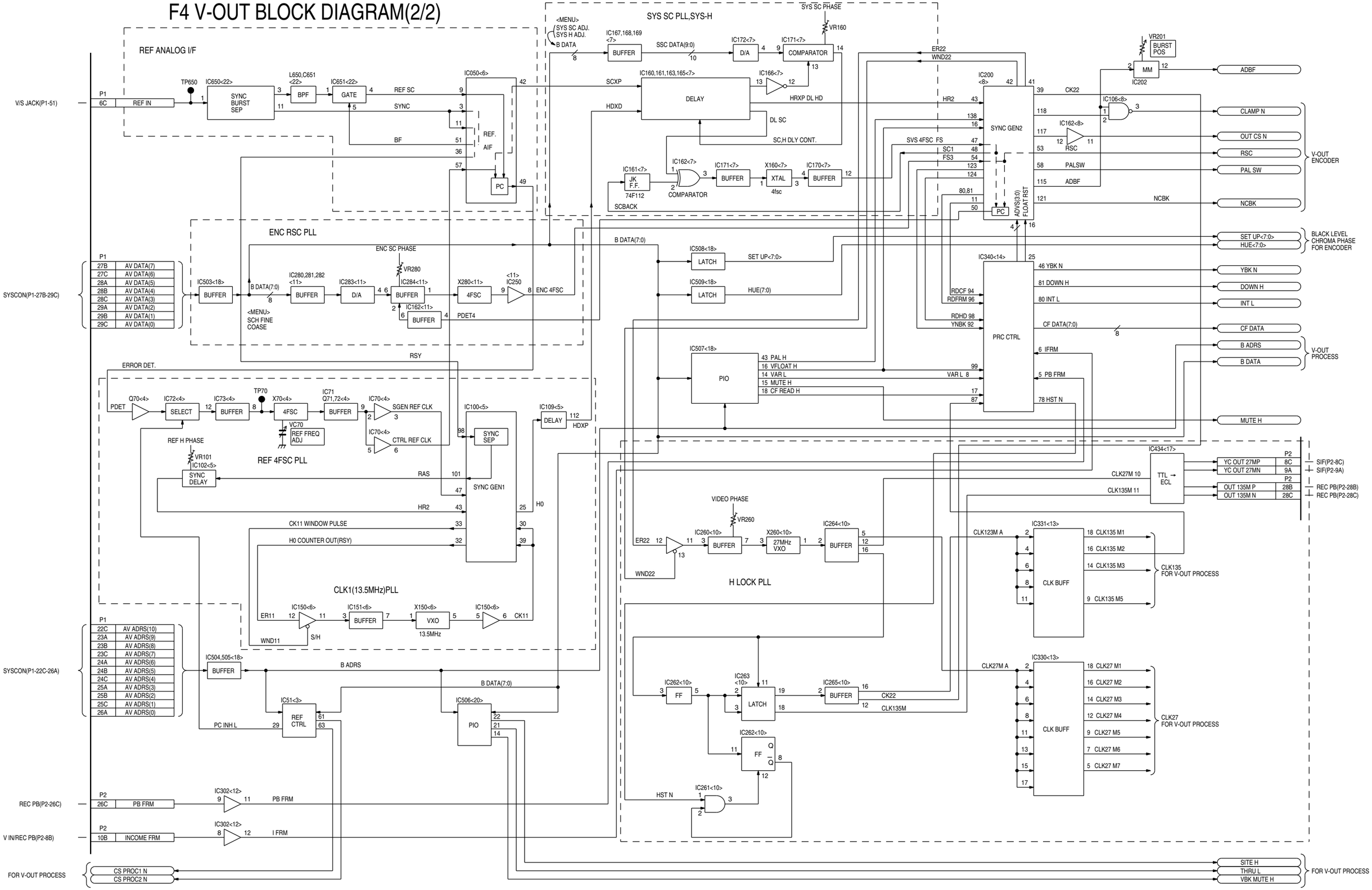

F5 REC PB BLOCK DIAGRAM

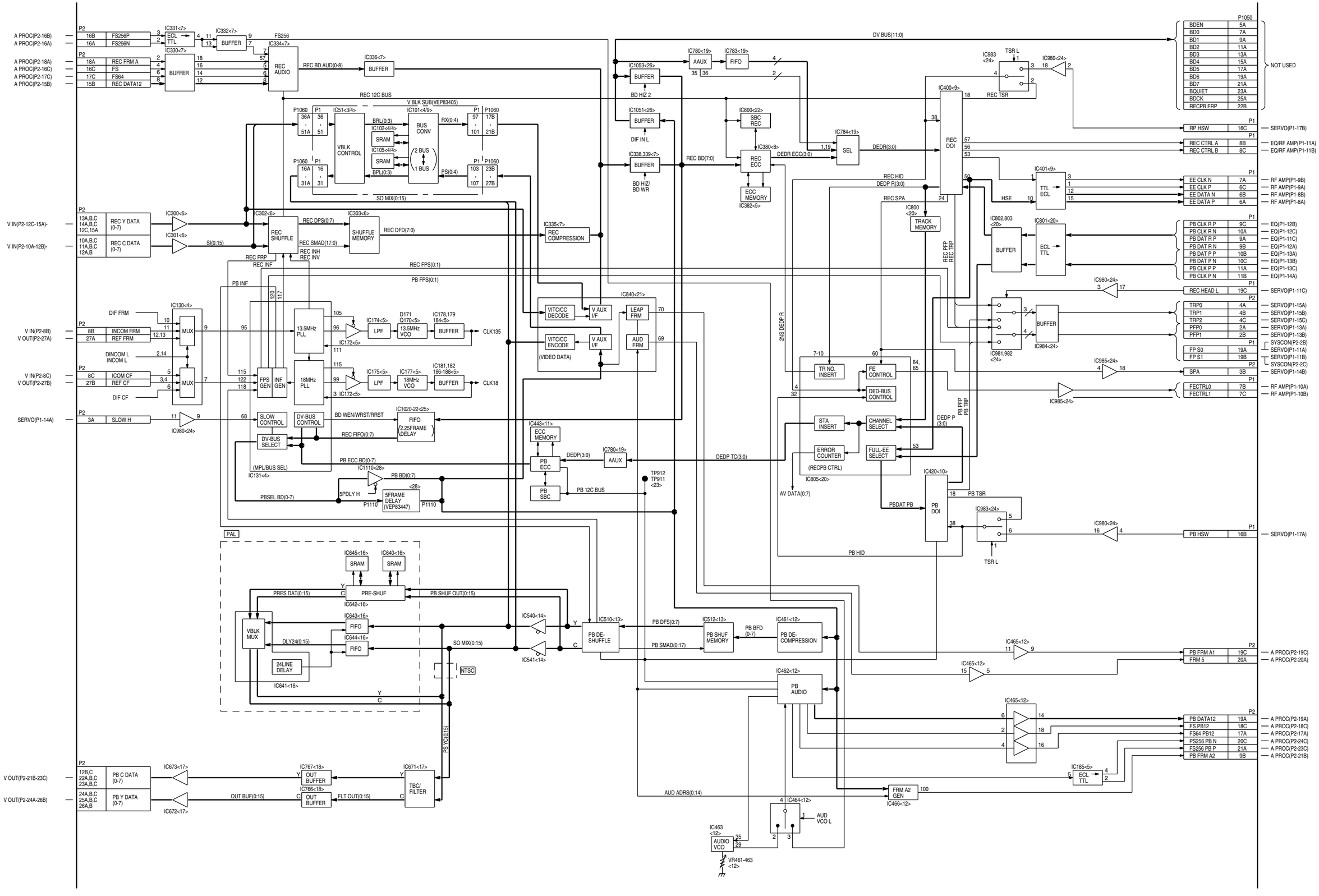
A PROC(P2-16B)
A PROC(P2-16A)
A PROC(P2-18A)
A PROC(P2-16C)
A PROC(P2-17C)
A PROC(P2-15B)
V IN(P2-12C-15A)-
V IN(P2-10A-12B)-
V IN(P2-8B)
V OUT(P2-27A)
V IN(P2-8C)
V OUT(P2-27B)
SERVO(P1-14A)
V OUT(P2-21B-23C)
V OUT(P2-24A-26B)
DV BUS(11:0)
REC BD AUD(0-8)
REC 12C BUS
V BLK SUB(VEP83405)
SO MIX(0:15)
REC BD(7:0)
REC DPS(0:7)
REC SMAD(17:0)
REC INH
REC INV
REC DFD(7:0)
REC FRP
REC INF
REC FPS(0:1)
PB INF
PB FPS(0:1)
DIF FRM
DINCOM L
INCOM L
DIF CF
BD WEN/WRST/RRST
REC FIFO(0:7)
PB ECC BD(0-7)
PB BD(0:7)
PBSEL BD(0-7)
PB 12C BUS
DEDP(3:0)
DEDP TC(3:0)
DEDR(3:0)
DEDR ECC(3:0)
REC HID
DEDP R(3:0)
REC SPA
REC PFP
REC TRP
PB PFP
PB TRP
PB TSR
PBDAT PB
PB HID
AV DATA(0:7)
BD HIZ 2
DIF IN L
BD HIZ/
BD WR
PRES DAT(0:15)
PB SHUF OUT(0:15)
PB DFS(0:7)
PB SMAD(0:17)
PB BFD
(0-7)
SO MIX(0:15)
DLY24(0:15)
PS VC(0:15)
AUD ADRS(0:14)
PAL
NTSC
P2
16B FS256P
16A FS256N
18A REC FRM A
16C FS
17C FS64
15B REC DATA12
13A,B,C 14A,B,C 12C,15A REC Y DATA (0-7)
10A,B,C 11A,B,C 12A,B REC C DATA (0-7)
8B INCOM FRM
27A REF FRM
8C ICOM CF
27B REF CF
3A SLOW H
12B,C 22A,B,C 23A,B,C PB C DATA (0-7)
24A,B,C 25A,B,C 26A,B PB Y DATA (0-7)
P1
P1050
BDEN 5A
BD0 7A
BD1 9A
BD2 11A
BD3 13A
BD4 15A
BD5 17A
BD6 19A
BD7 21A
BQUIET 23A
BDCK 25A
RECPB FRP 22B
NOT USED
RP HSW 16C — SERVO(P1-17B)
REC CTRL A 8B — EQ/RF AMP(P1-11A)
REC CTRL B 8C — EQ/RF AMP(P1-11B)
EE CLK N 7A — RF AMP(P1-9B)
EE CLK P 6C — RF AMP(P1-9A)
EE DATA N 6B — RF AMP(P1-8B)
EE DATA P 6A — RF AMP(P1-8A)
PB CLK R P 9C — EQ(P1-12B)
PB CLK R N 10A — EQ(P1-12C)
PB DAT R P 9A — EQ(P1-11C)
PB DAT R N 9B — EQ(P1-12A)
PB DAT P P 10B — EQ(P1-13A)
PB DAT P N 10C — EQ(P1-13B)
PB CLK P P 11A — EQ(P1-13C)
PB CLK P N 11B — EQ(P1-14A)
REC HEAD L 19C — SERVO(P1-11C)
TRP0 4A — SERVO(P1-15A)
TRP1 4B — SERVO(P1-15B)
TRP2 4C — SERVO(P1-15C)
PFP0 2A — SERVO(P1-13A)
PFP1 2B — SERVO(P1-13B)
FP S0 19A — SYSCON(P2-2B) SERVO(P1-11A)
FP S1 19B — SYSCON(P1-11B) SYSCON(P2-2C)
SPA 3B — SERVO(P1-14B)
FECTRL0 7B — RF AMP(P1-10A)
FECTRL1 7C — RF AMP(P1-10B)
PB HSW 16B — SERVO(P1-17A)
PB FRM A1 19C — A PROC(P2-19C)
FRM 5 20A — A PROC(P2-20A)
PB DATA12 19A — A PROC(P2-19A)
FS PB12 18C — A PROC(P2-18C)
FS64 PB12 17A — A PROC(P2-17A)
PS256 PB N 20C — A PROC(P2-24C)
FS256 PB P 21A — A PROC(P2-23C)
PB FRM A2 9B — A PROC(P2-21B)
IC331<7> ECL TTL
IC332<7> BUFFER
IC330<7> BUFFER
IC334<7> REC AUDIO
IC336<7> BUFFER
IC1053<26> BUFFER
IC1051<26> BUFFER
IC338,339<7> BUFFER
IC780<19> AAUX
IC783<19> FIFO
IC784<19> SEL
IC800<22> SBC REC
IC380<8> REC ECC
IC382<5> ECC MEMORY
IC400<9> REC DOI
IC800 <20> TRACK MEMORY
IC983 <24>
TSR L
REC TSR
IC980<24>
IC401<9> TTL ECL
HSE
IC802,803 <20> BUFFER
IC801<20> ECL TTL
IC981,982 <24>
IC984<24> BUFFER
IC985<24>
IC101<4/9> BUS CONV
2 BUS
1 BUS
IC102<4/4> SRAM
IC105<4/4> SRAM
IC51<3/4> VBLK CONTROL
IC302<6> REC SHUFFLE
IC303<6> SHUFFLE MEMORY
IC300<6>
IC301<6>
IC335<7> REC COMPRESSION
IC130<4> MUX
IC840<21> LEAP FRM
AUD FRM
VITC/CC DECODE
VITC/CC ENCODE
V AUX I/F
(VIDEO DATA)
13.5MHz PLL
18MHz PLL
IC172<5>
IC174<5> LPF
IC175<5> LPF
D171 Q170<5> 13.5MHz VCO
IC177<5> 18MHz VCO
IC178,179 184<5> BUFFER
IC181,182 186-188<5> BUFFER
CLK135
CLK18
FPS GEN
INF GEN
SLOW CONTROL
DV-BUS CONTROL
DV-BUS SELECT
IC1020-22<25> FIFO (2.25FRAME DELAY)
IC1110<28>
5PDLY H
5FRAME DELAY (VEP83447)
P1110
IC131<4>
(MPL/BUS SEL)
IC980<24>
IC443<11> ECC MEMORY
PB ECC
PB SBC
IC780<19> AAUX
TP912 TP911 <23>
IC645<16> SRAM
IC640<16> SRAM
PRE-SHUF
IC642<16>
VBLK MUX
IC643<16> FIFO
IC644<16> FIFO
24LINE DELAY
IC641<16>
IC540<14>
IC541<14>
IC510<13> PB DE-SHUFFLE
IC512<13> PB SHUF MEMORY
IC461<12> PB DE-COMPRESSION
IC462<12> PB AUDIO
IC465<12>
IC673<17>
IC672<17>
IC767<18> OUT BUFFER
IC766<18> OUT BUFFER
IC671<17> TBC/ FILTER
OUT BUF(0:15)
FLT OUT(0:15)
IC185<5> ECL TTL
FRM A2 GEN
IC466<12>
IC464<12>
AUD VCO L
IC463 <12> AUDIO VCO
VR461-463 <12>
TR NO. INSERT
FE CONTROL
DED-BUS CONTROL
STA INSERT
CHANNEL SELECT
ERROR COUNTER
FULL-EE SELECT
(RECPB CTRL)
IC805<20>
IC420<10> PB DOI
IC983<24>
TSR L
IC980<24>
PB HSW
IC1185<5>
IC985<24>
IC465<12>
IC980<24>
REC HEAD L
IC981,982 <24>
IC984<24> BUFFER
IC985<24>
SPA
FECTRL0
FECTRL1
IC465<12>
PB DATA12
FS PB12
FS64 PB12
PS256 PB N
FS256 PB P
PB FRM A2
IC465<12>
IC465<12>
IC465<12>

F6 VIDEO IN BLOCK DIAGRAM(NTSC)

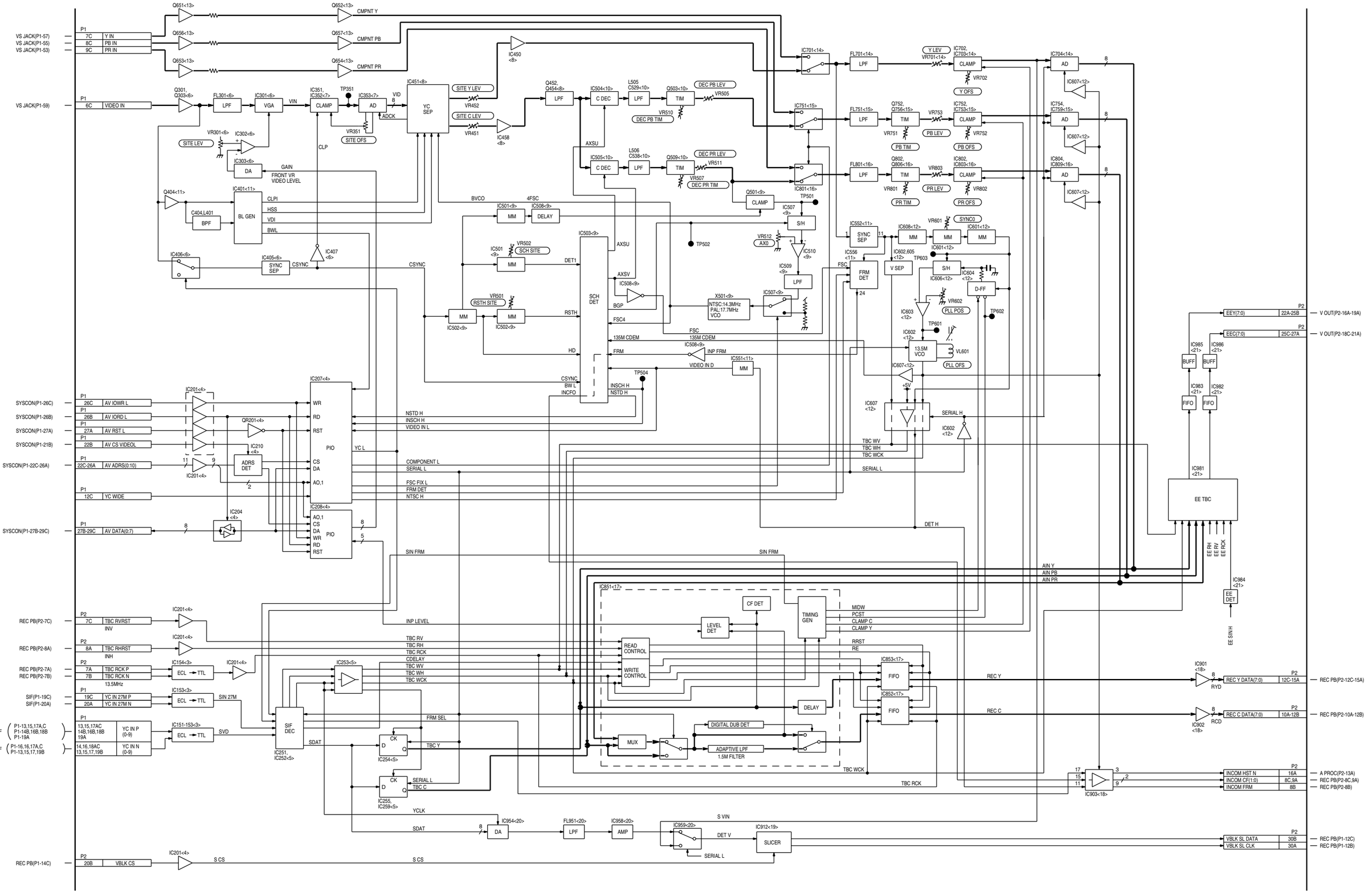

F6 VIDEO IN BLOCK DIAGRAM(PAL)

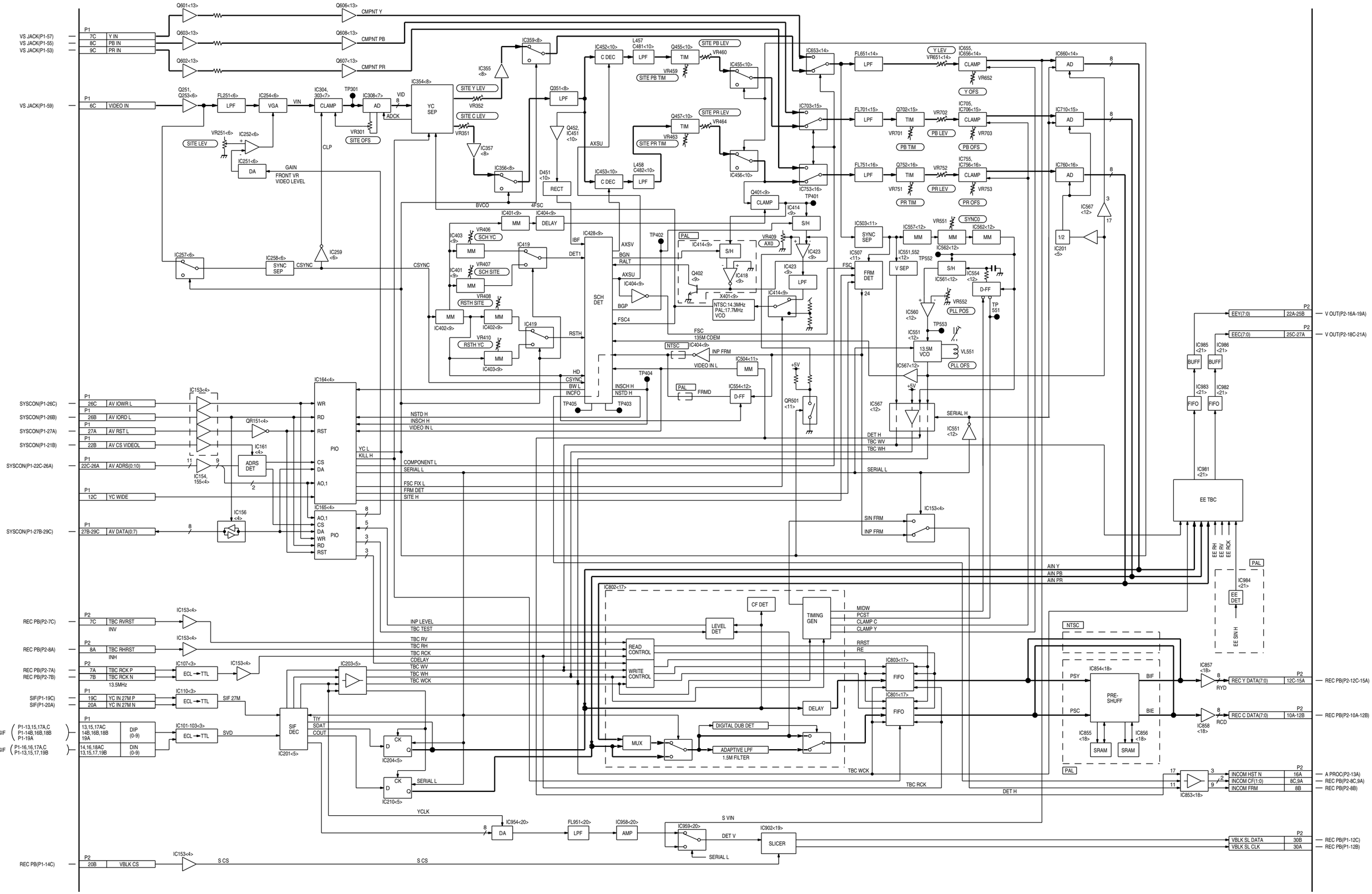

F7 A PROC BLOCK DIAGRAM

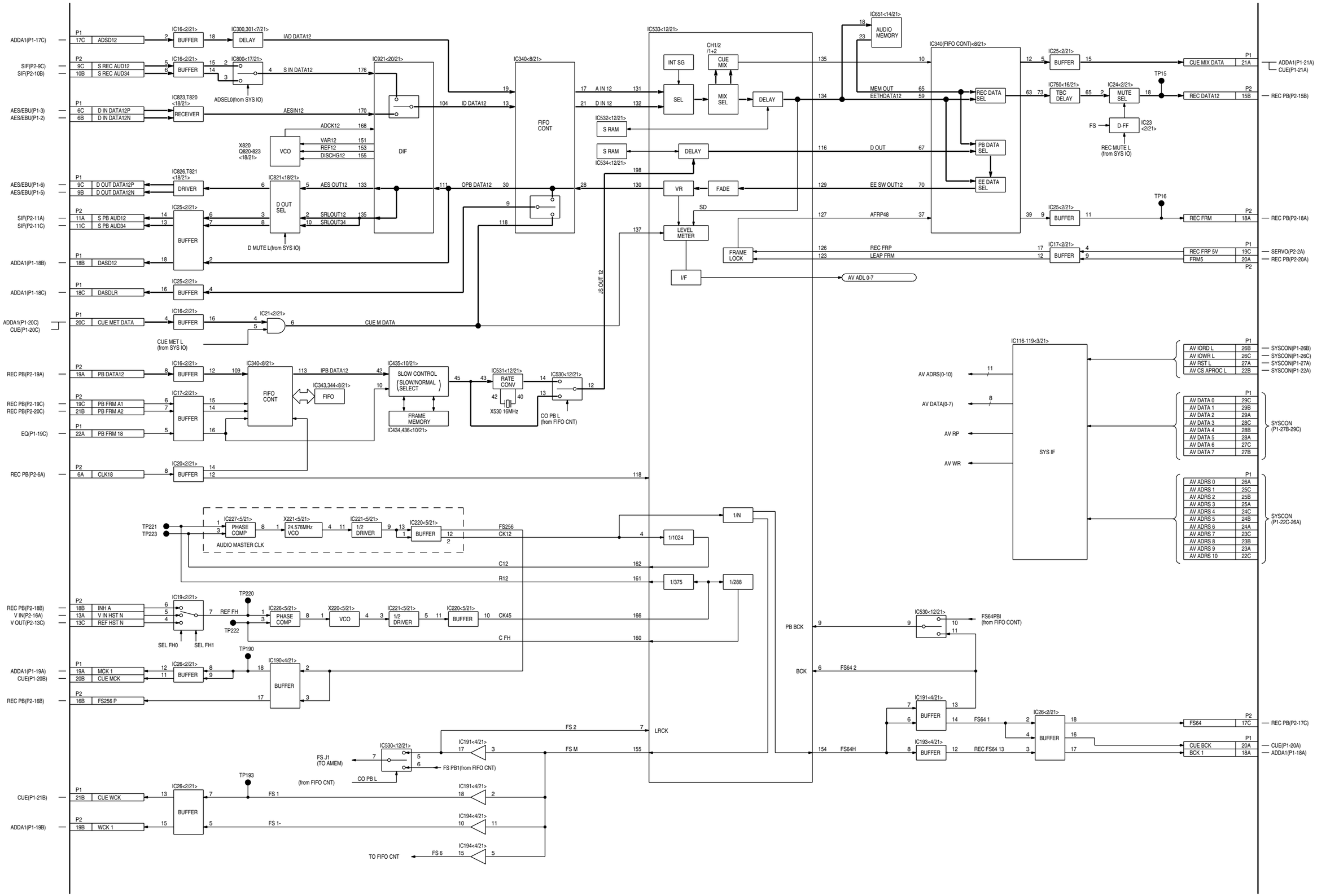

F8 AUDIO AD/DA BLOCK DIAGRAM

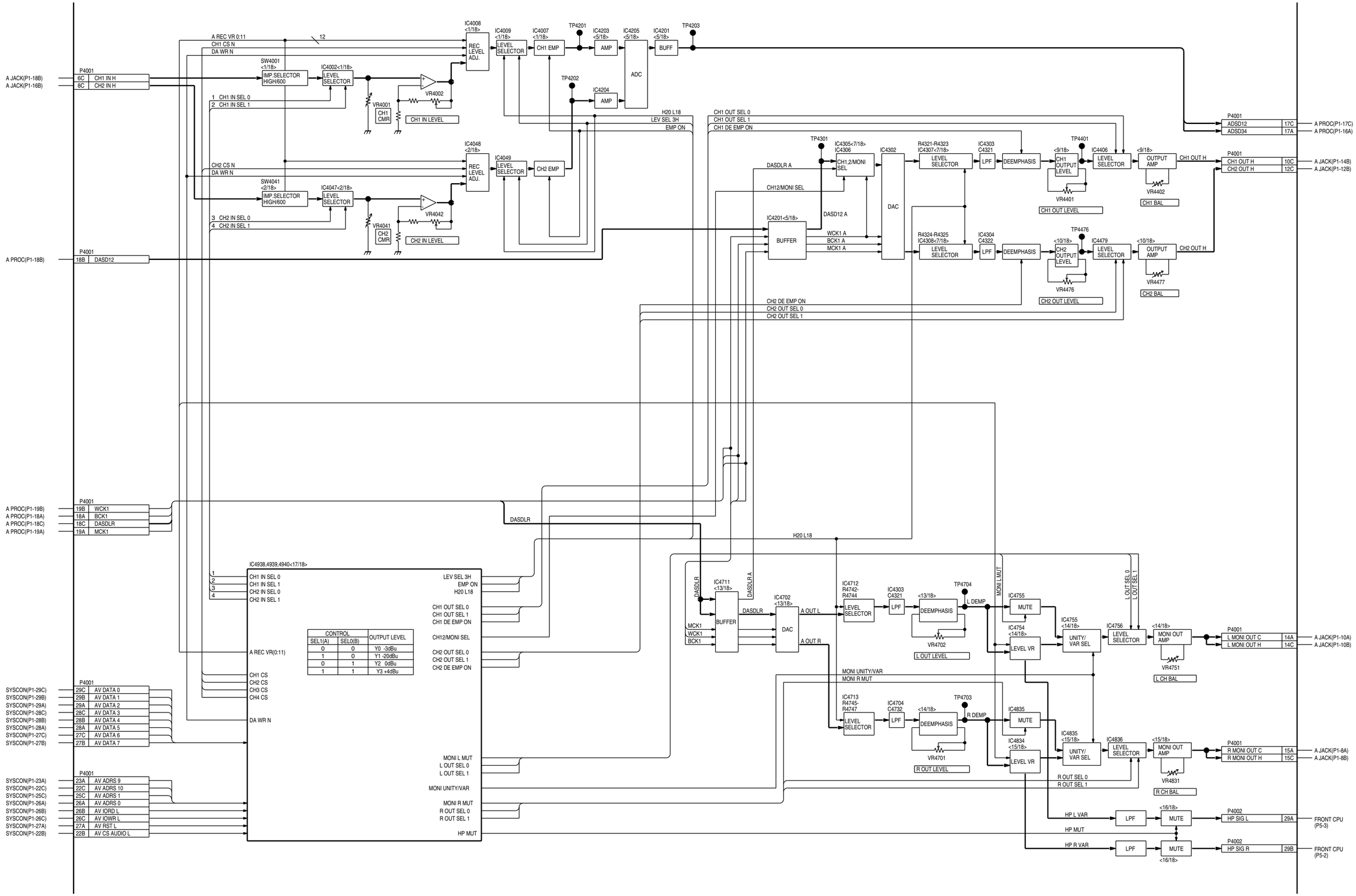

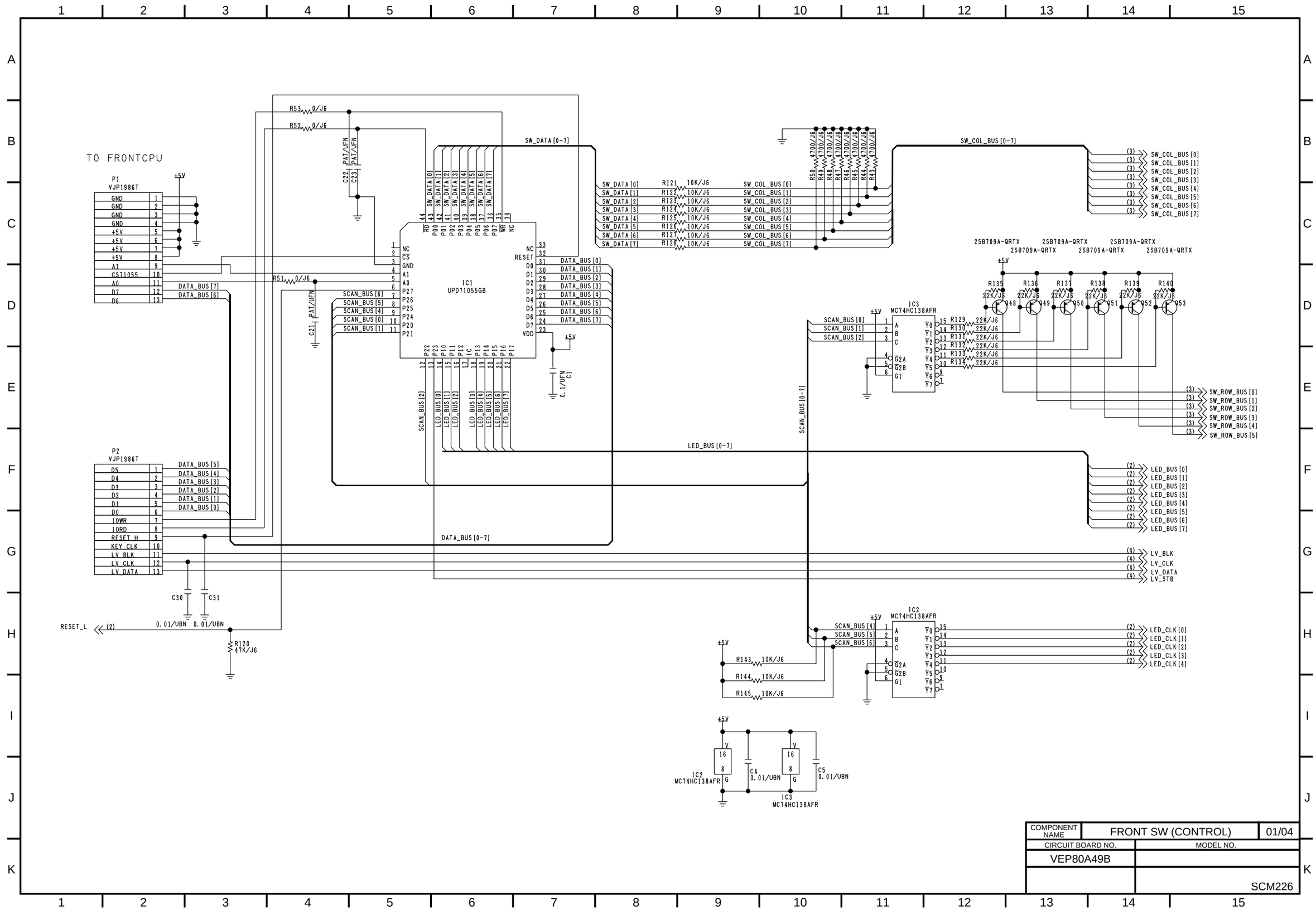

COMPONENT NAME	FRONT SW (CONTROL)	01/04
CIRCUIT BOARD NO.	MODEL NO.	
VEP80A49B		
	SCM226	

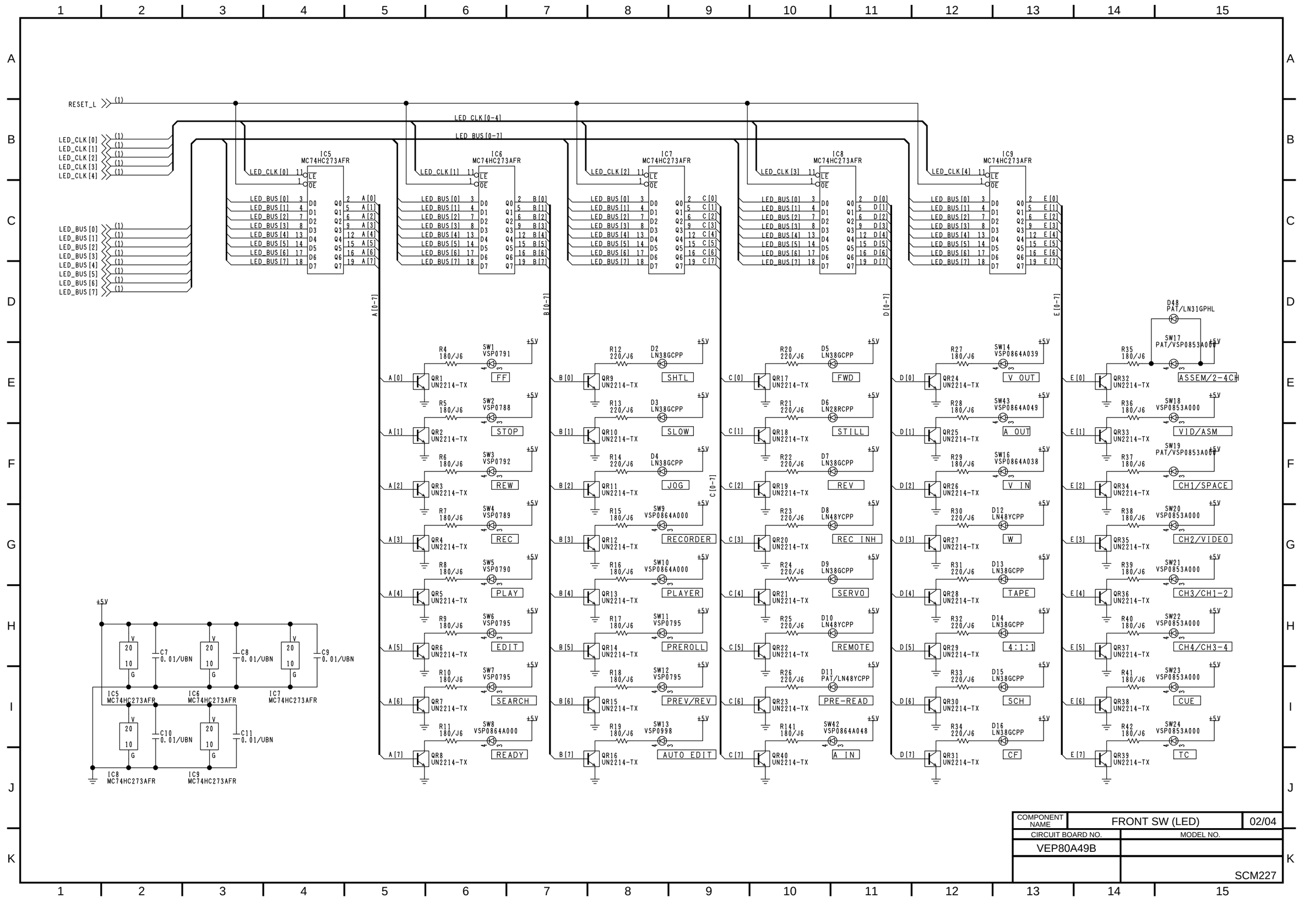

COMPONENT NAME	FRONT SW (LED)	02/04
CIRCUIT BOARD NO.	MODEL NO.	
VEP80A49B		
	SCM227	

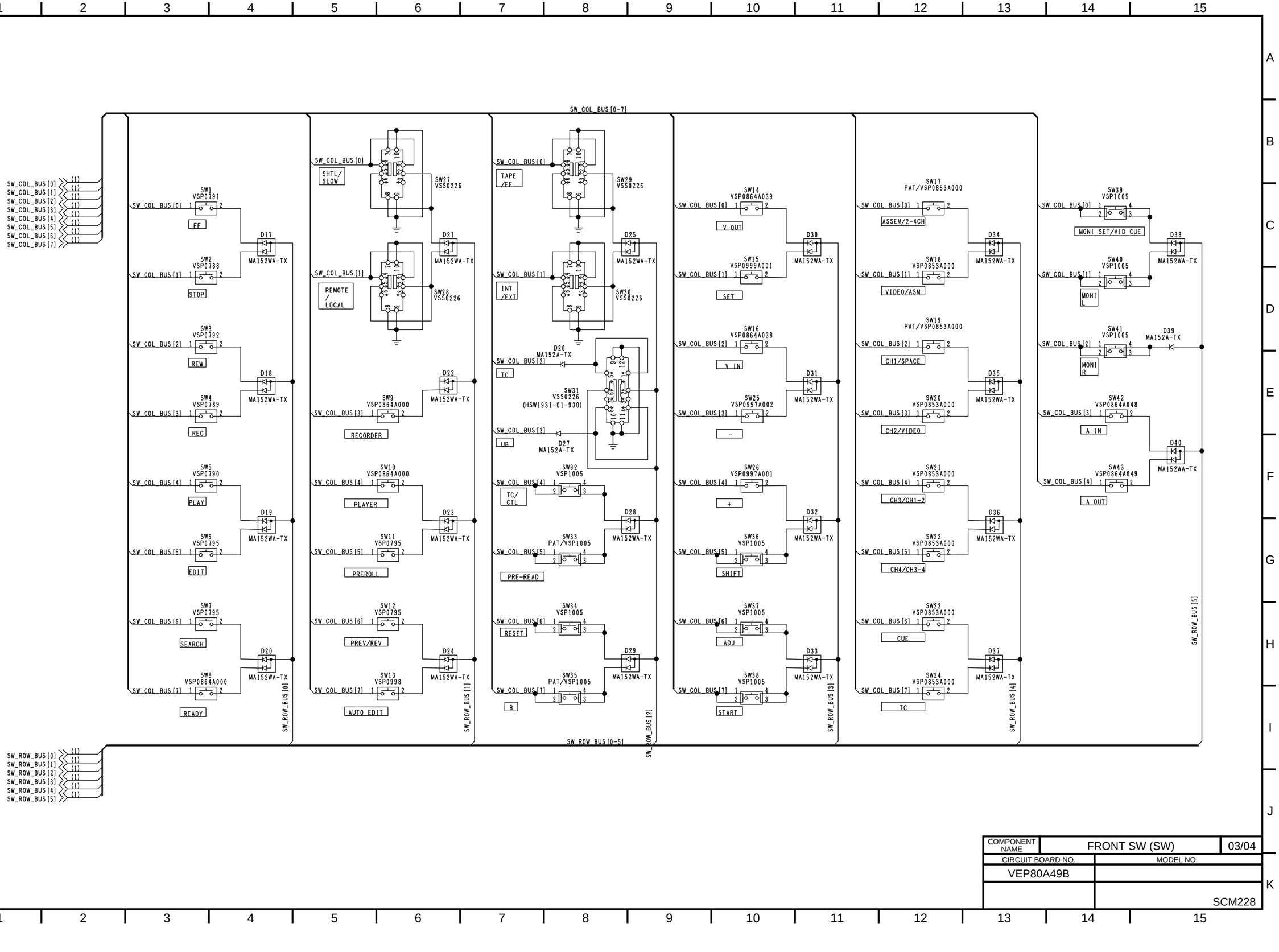

COMPONENT NAME	FRONT SW (SW)	03/04
CIRCUIT BOARD NO.	MODEL NO.	
VEP80A49B		
		SCM228

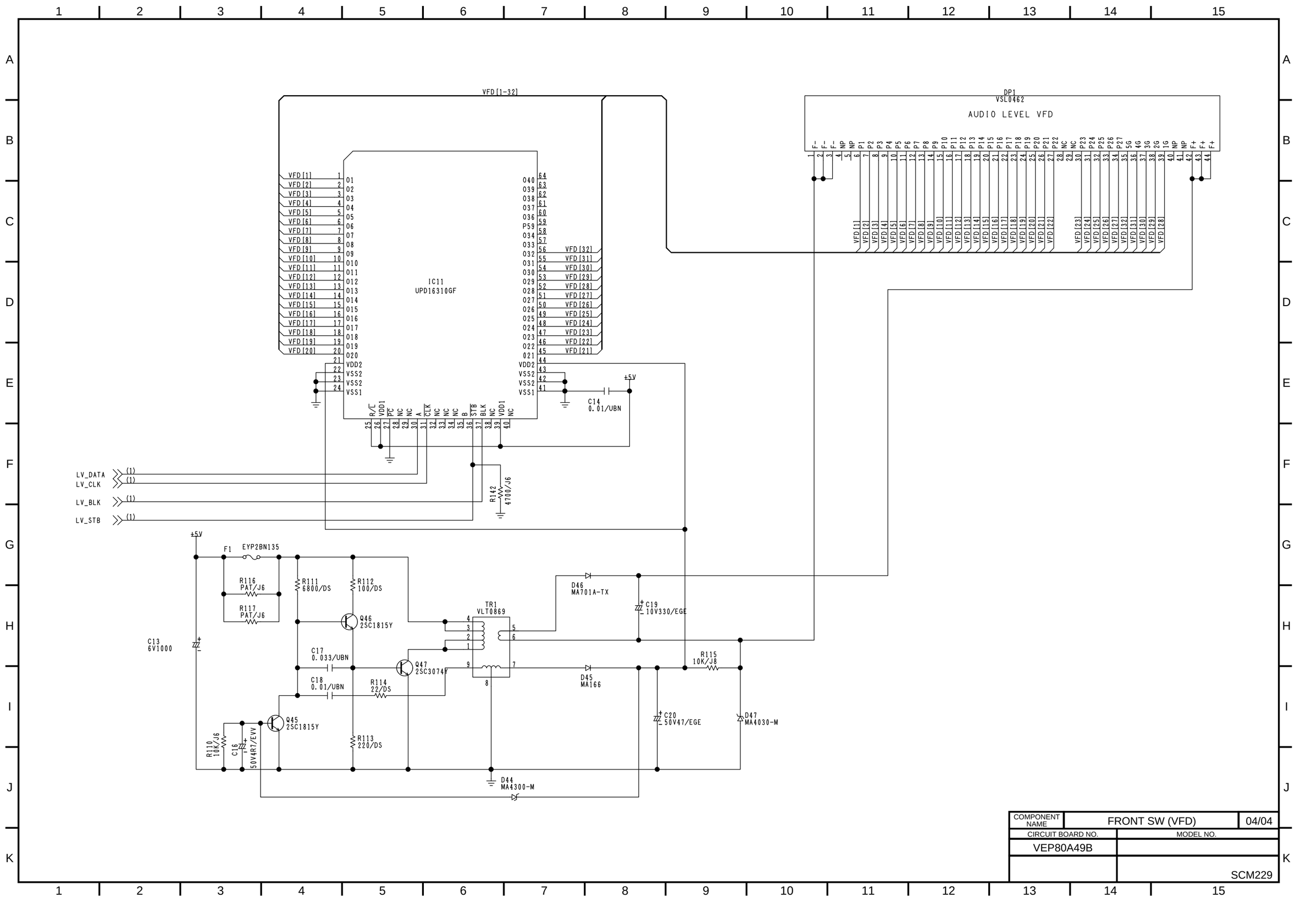

COMPONENT NAME	FRONT SW (VFD)	04/04
CIRCUIT BOARD NO.	MODEL NO.	
VEP80A49B		
	SCM229	

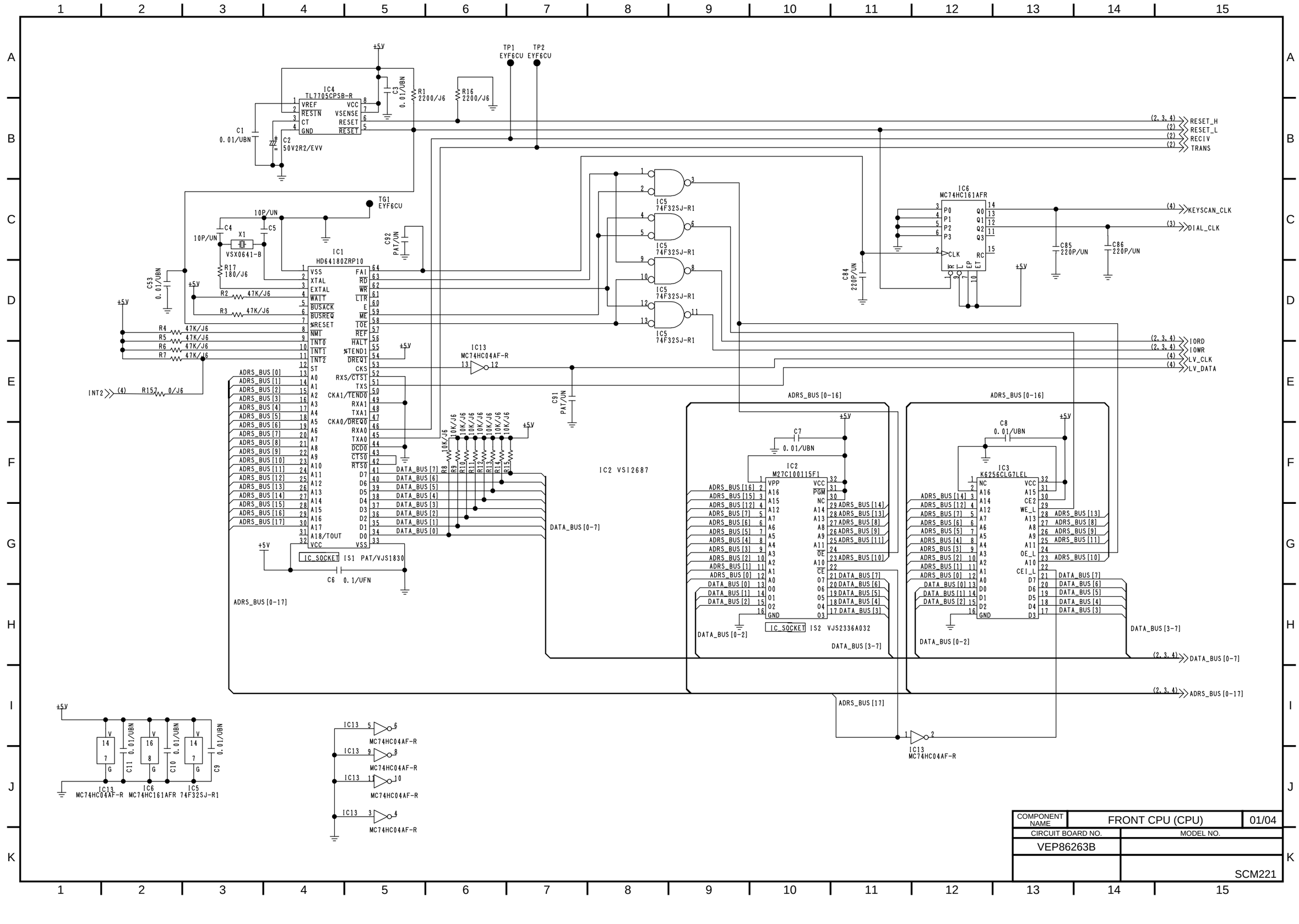
IC4
TL7705CPSB-R
VREF
RESIN
CT
GND
VCC
VSENSE
RESET
RESET
C1
0.01/UBN
C2
50V2R2/EVV
C3
0.01/UBN
R1
2200/J6
R16
2200/J6
TP1
EYF6CU
TP2
EYF6CU
+5V
TG1
EYF6CU
10P/UN
C4
10P/UN
C5
X1
VSX0641-B
C92
PAT/UN
IC1
HD64180ZRP10
C53
0.01/UBN
R17
180/J6
R2
47K/J6
R3
47K/J6
R4
47K/J6
R5
47K/J6
R6
47K/J6
R7
47K/J6
INT2
(4)
R157
0/J6
ADRS_BUS[0]
ADRS_BUS[1]
ADRS_BUS[2]
ADRS_BUS[3]
ADRS_BUS[4]
ADRS_BUS[5]
ADRS_BUS[6]
ADRS_BUS[7]
ADRS_BUS[8]
ADRS_BUS[9]
ADRS_BUS[10]
ADRS_BUS[11]
ADRS_BUS[12]
ADRS_BUS[13]
ADRS_BUS[14]
ADRS_BUS[15]
ADRS_BUS[16]
ADRS_BUS[17]
DATA_BUS[7]
DATA_BUS[6]
DATA_BUS[5]
DATA_BUS[4]
DATA_BUS[3]
DATA_BUS[2]
DATA_BUS[1]
DATA_BUS[0]
IC_SOCKET IS1 PAT/VJS1830
C6 0.1/UFN
IC2 VSI2687
DATA_BUS[0-7]
ADRS_BUS[0-17]
IC5
74F32SJ-R1
IC13
MC74HC04AF-R
C91
PAT/UN
10K/J6
R8
R9
R10
R11
R12
R13
R14
R15
IC6
MC74HC161AFR
C84
220P/UN
C85
220P/UN
C86
220P/UN
(2,3,4) RESET_H
(2) RESET_L
(2) RECIV
(2) TRANS
(4) KEYSCAN_CLK
(3) DIAL_CLK
(2,3,4) IORD
(2,3,4) IOWR
(4) LV_CLK
(4) LV_DATA
ADRS_BUS[0-16]
C7
0.01/UBN
IC2
M27C100115F1
IC_SOCKET IS2 VJS2336A032
DATA_BUS[0-2]
DATA_BUS[3-7]
C8
0.01/UBN
IC3
K6256CLG7LEL
(2,3,4) DATA_BUS[0-7]
(2,3,4) ADRS_BUS[0-17]
ADRS_BUS[17]
C11 0.01/UBN
C10 0.01/UBN
C9 0.01/UBN
IC13 MC74HC04AF-R
IC6 MC74HC161AFR
IC5 74F32SJ-R1
COMPONENT NAME
FRONT CPU (CPU)
01/04
CIRCUIT BOARD NO.
MODEL NO.
VEP86263B
SCM221

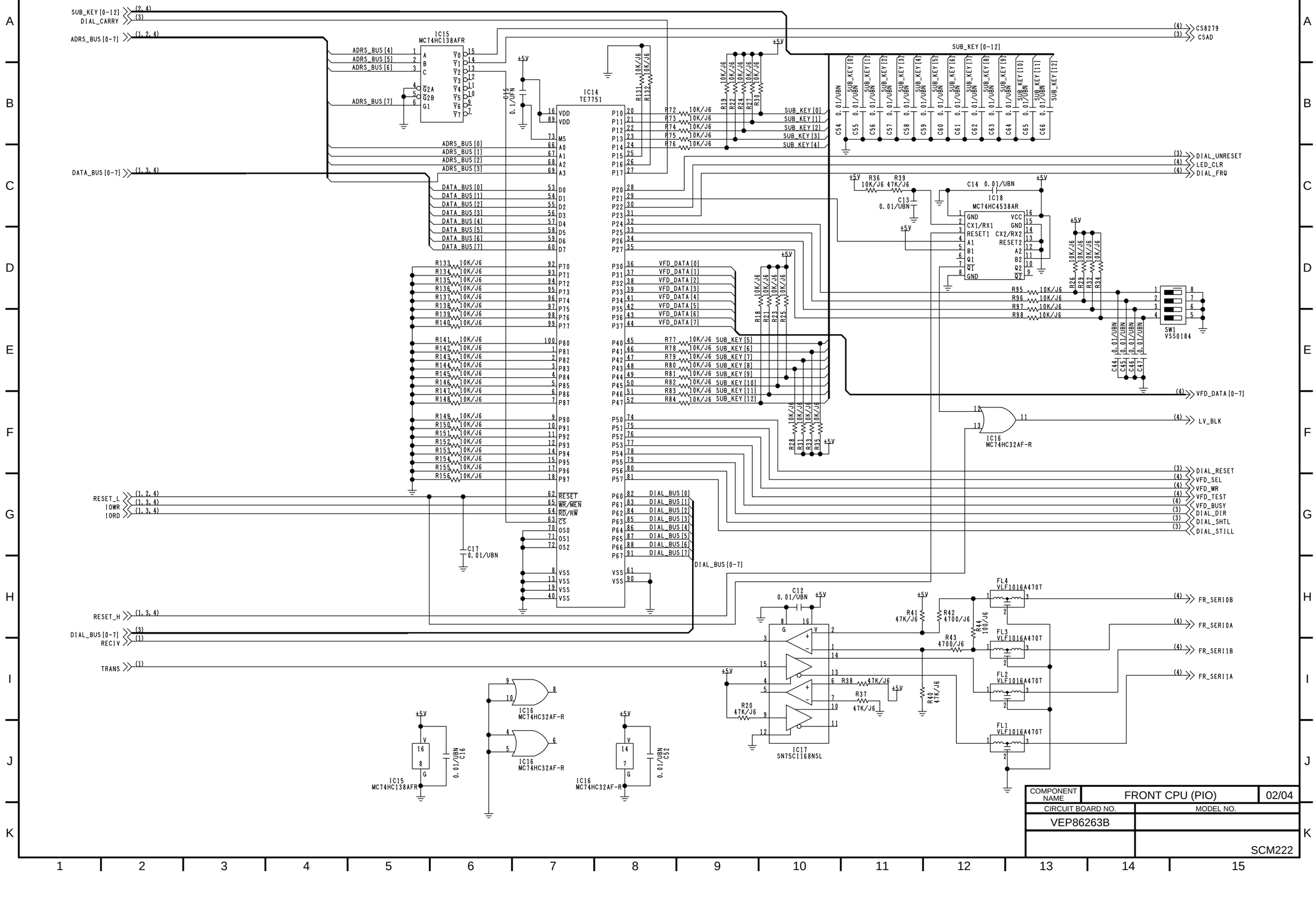
SUB_KEY [0-12]
DIAL_CARRY
ADRS_BUS [0-7]
DATA_BUS [0-7]
RESET_L
IOWR
IORD
RESET_H
DIAL_BUS [0-7]
RECIV
TRANS
IC15
MC74HC138AFR
IC14
TE7751
IC18
MC74HC4538AR
IC16
MC74HC32AF-R
IC17
SN75C1168NSL
SW1
VSS0184
CS8279
CSAD
DIAL_UNRESET
LED_CLR
DIAL_FRQ
VFD_DATA [0-7]
LV_BLK
DIAL_RESET
VFD_SEL
VFD_WR
VFD_TEST
VFD_BUSY
DIAL_DIR
DIAL_SHTL
DIAL_STILL
FR_SERI0B
FR_SERI0A
FR_SERI1B
FR_SERI1A
COMPONENT NAME
FRONT CPU (PIO)
02/04
CIRCUIT BOARD NO.
MODEL NO.
VEP86263B
SCM222

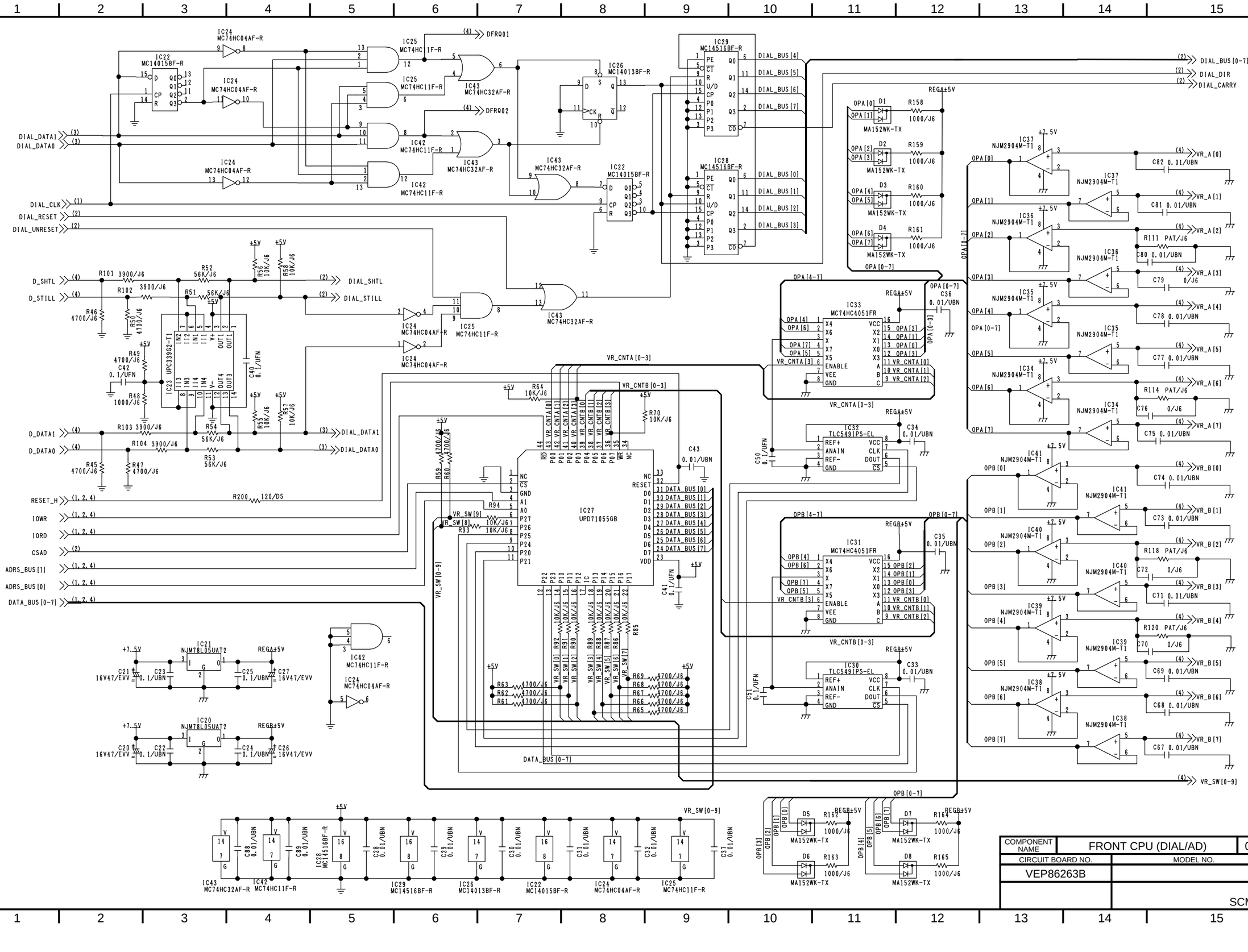

COMPONENT NAME	FRONT CPU (DIAL/AD)	03/04
CIRCUIT BOARD NO.	MODEL NO.	
VEP86263B		
		SCM223

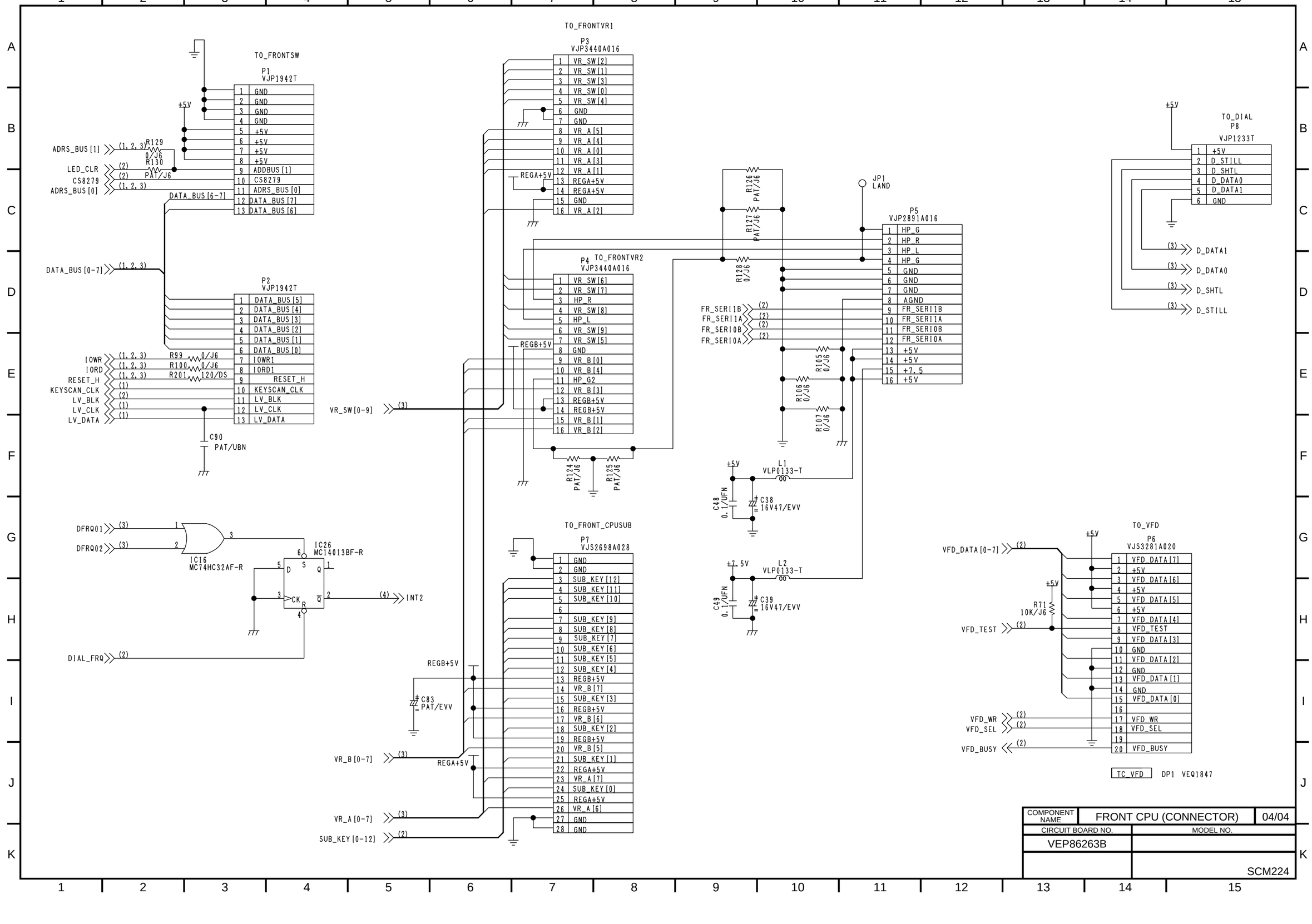
TO_FRONTSW
P1
VJP1942T
1 GND
2 GND
3 GND
4 GND
5 +5V
6 +5V
7 +5V
8 +5V
9 ADDBUS[1]
10 CS8279
11 ADRS_BUS[0]
12 DATA_BUS[7]
13 DATA_BUS[6]
+5V
ADRS_BUS[1]
R129 0/J6
R130 PAT/J6
LED_CLR
CS8279
ADRS_BUS[0]
DATA_BUS[6-7]
DATA_BUS[0-7]
P2
VJP1942T
1 DATA_BUS[5]
2 DATA_BUS[4]
3 DATA_BUS[3]
4 DATA_BUS[2]
5 DATA_BUS[1]
6 DATA_BUS[0]
7 IOWR1
8 IORD1
9 RESET_H
10 KEYSCAN_CLK
11 LV_BLK
12 LV_CLK
13 LV_DATA
IOWR
IORD
RESET_H
KEYSCAN_CLK
LV_BLK
LV_CLK
LV_DATA
R99 0/J6
R100 0/J6
R201 120/DS
C90 PAT/UBN
TO_FRONTVR1
P3
VJP3440A016
1 VR_SW[2]
2 VR_SW[1]
3 VR_SW[3]
4 VR_SW[0]
5 VR_SW[4]
6 GND
7 GND
8 VR_A[5]
9 VR_A[4]
10 VR_A[0]
11 VR_A[3]
12 VR_A[1]
13 REGA+5V
14 REGA+5V
15 GND
16 VR_A[2]
REGA+5V
TO_FRONTVR2
P4
VJP3440A016
1 VR_SW[6]
2 VR_SW[7]
3 HP_R
4 VR_SW[8]
5 HP_L
6 VR_SW[9]
7 VR_SW[5]
8 GND
9 VR_B[0]
10 VR_B[4]
11 HP_G2
12 VR_B[3]
13 REGB+5V
14 REGB+5V
15 VR_B[1]
16 VR_B[2]
REGB+5V
VR_SW[0-9]
R124 PAT/J6
R125 PAT/J6
R126 PAT/J6
R127 PAT/J6
R128 0/J6
JP1
LAND
P5
VJP2891A016
1 HP_G
2 HP_R
3 HP_L
4 HP_G
5 GND
6 GND
7 GND
8 AGND
9 FR_SERI1B
10 FR_SERI1A
11 FR_SERI0B
12 FR_SERI0A
13 +5V
14 +5V
15 +7.5
16 +5V
FR_SERI1B
FR_SERI1A
FR_SERI0B
FR_SERI0A
R105 0/J6
R106 0/J6
R107 0/J6
L1
VLP0133-T
C48 0.1/UFN
C38 16V47/EVV
L2
VLP0133-T
C49 0.1/UFN
C39 16V47/EVV
TO_DIAL
P8
VJP1233T
1 +5V
2 D_STILL
3 D_SHTL
4 D_DATA0
5 D_DATA1
6 GND
D_DATA1
D_DATA0
D_SHTL
D_STILL
DFRQ01
DFRQ02
IC16
MC74HC32AF-R
IC26
MC14013BF-R
INT2
DIAL_FRQ
TO_FRONT_CPUSUB
P7
VJS2698A028
1 GND
2 GND
3 SUB_KEY[12]
4 SUB_KEY[11]
5 SUB_KEY[10]
6
7 SUB_KEY[9]
8 SUB_KEY[8]
9 SUB_KEY[7]
10 SUB_KEY[6]
11 SUB_KEY[5]
12 SUB_KEY[4]
13 REGB+5V
14 VR_B[7]
15 SUB_KEY[3]
16 REGB+5V
17 VR_B[6]
18 SUB_KEY[2]
19 REGB+5V
20 VR_B[5]
21 SUB_KEY[1]
22 REGA+5V
23 VR_A[7]
24 SUB_KEY[0]
25 REGA+5V
26 VR_A[6]
27 GND
28 GND
C83 PAT/EVV
VR_B[0-7]
VR_A[0-7]
SUB_KEY[0-12]
TO_VFD
P6
VJS3281A020
1 VFD_DATA[7]
2 +5V
3 VFD_DATA[6]
4 +5V
5 VFD_DATA[5]
6 +5V
7 VFD_DATA[4]
8 VFD_TEST
9 VFD_DATA[3]
10 GND
11 VFD_DATA[2]
12 GND
13 VFD_DATA[1]
14 GND
15 VFD_DATA[0]
16
17 VFD_WR
18 VFD_SEL
19
20 VFD_BUSY
VFD_DATA[0-7]
R71 10K/J6
VFD_TEST
VFD_WR
VFD_SEL
VFD_BUSY
TC_VFD
DP1 VEQ1847
COMPONENT NAME
FRONT CPU (CONNECTOR)
04/04
CIRCUIT BOARD NO.
MODEL NO.
VEP86263B
SCM224

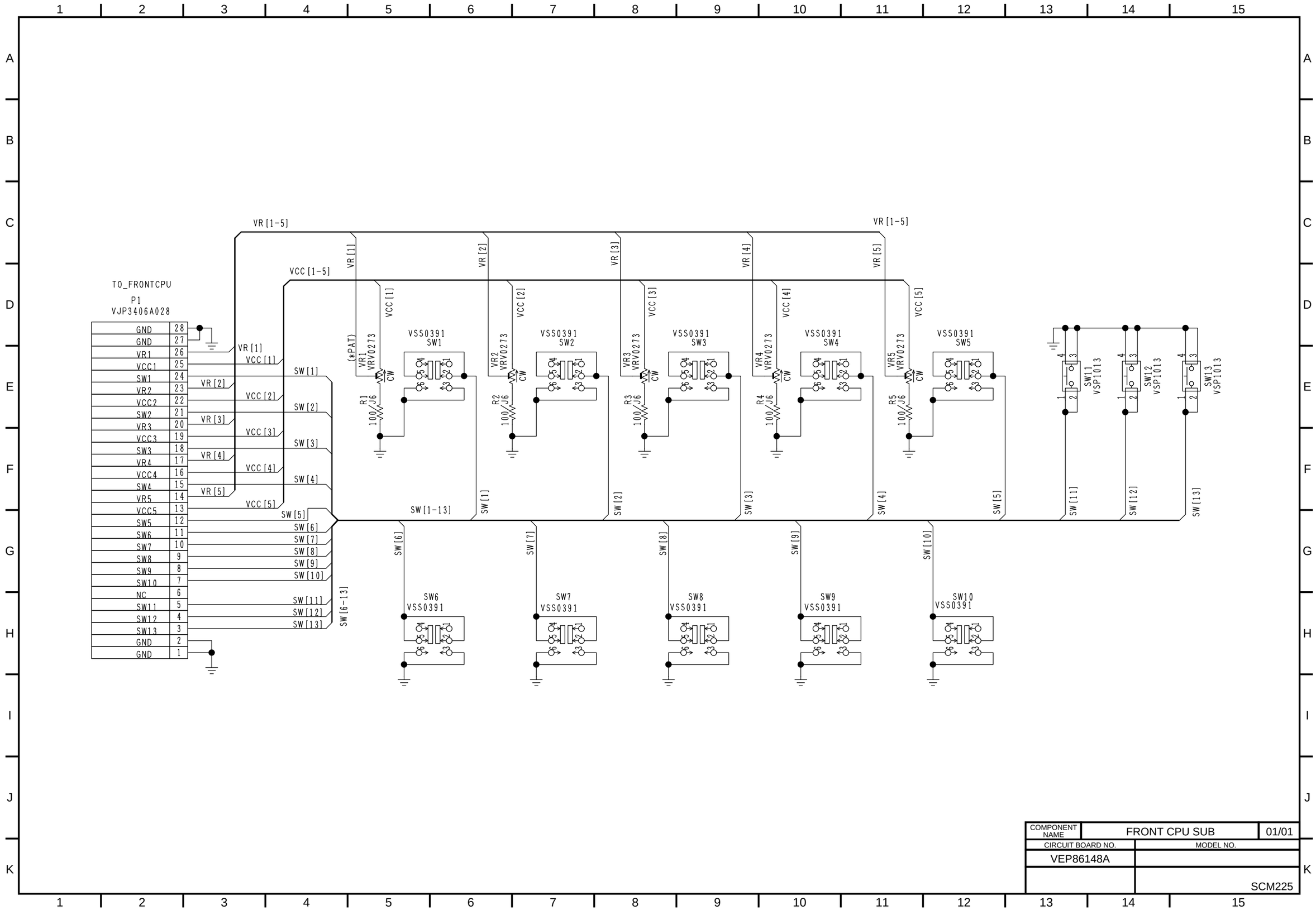

COMPONENT NAME	FRONT CPU SUB	01/01
CIRCUIT BOARD NO.	MODEL NO.	
VEP86148A		
	SCM225	

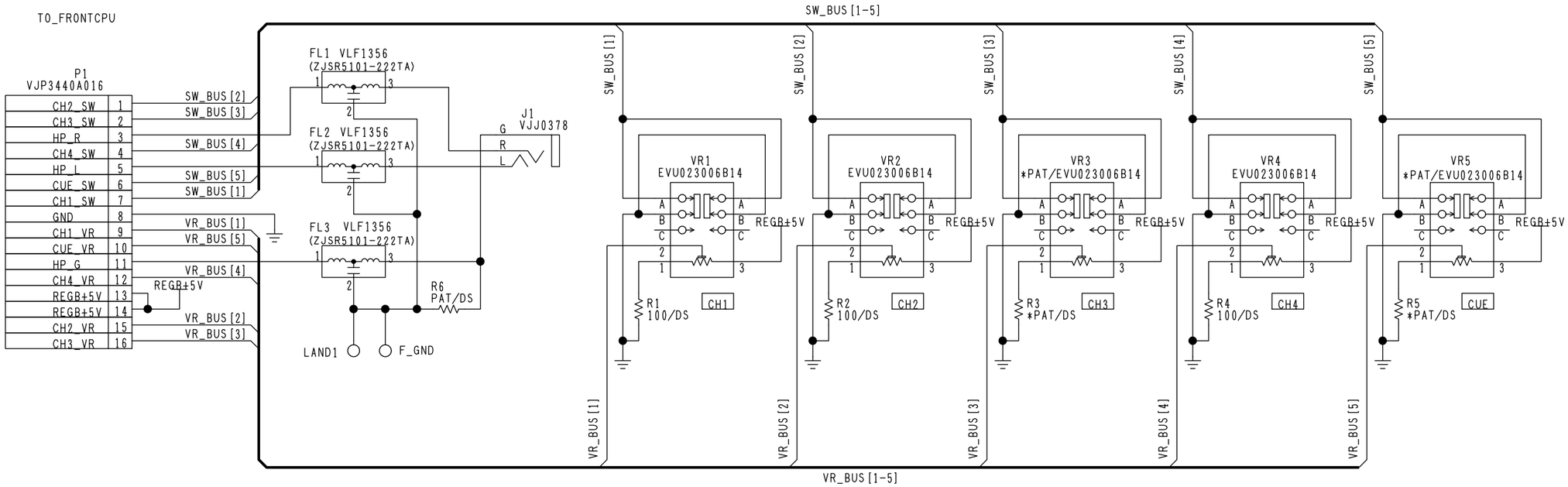

COMPONENT NAME	FRONT VR 1	01/01
CIRCUIT BOARD NO.	MODEL NO.	
VEP80963C		
	SCM230	

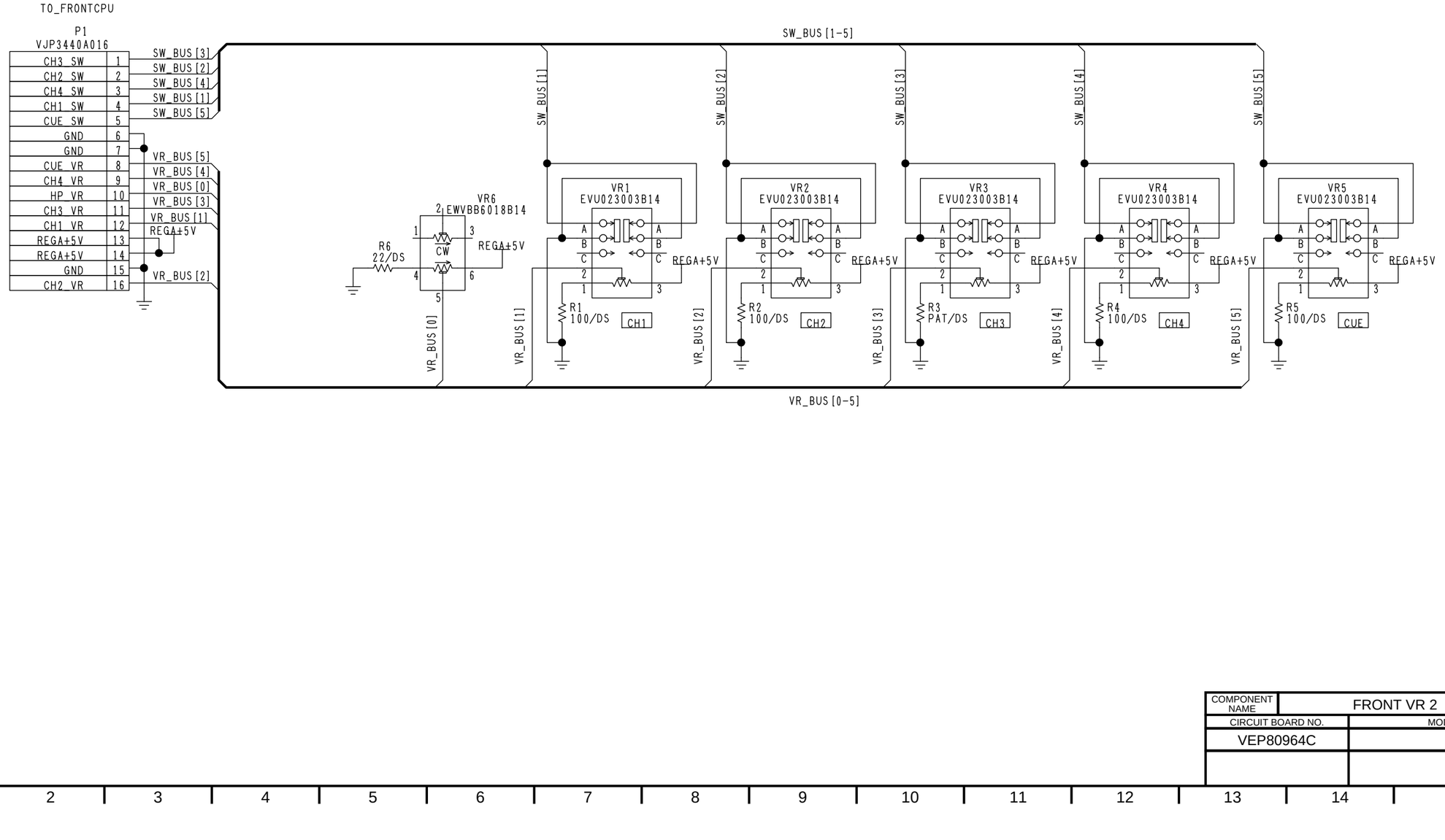

COMPONENT NAME	FRONT VR 2	01/01
CIRCUIT BOARD NO.	MODEL NO.	
VEP80964C		
	SCM231	

H1 CUE BLOCK DIAGRAM

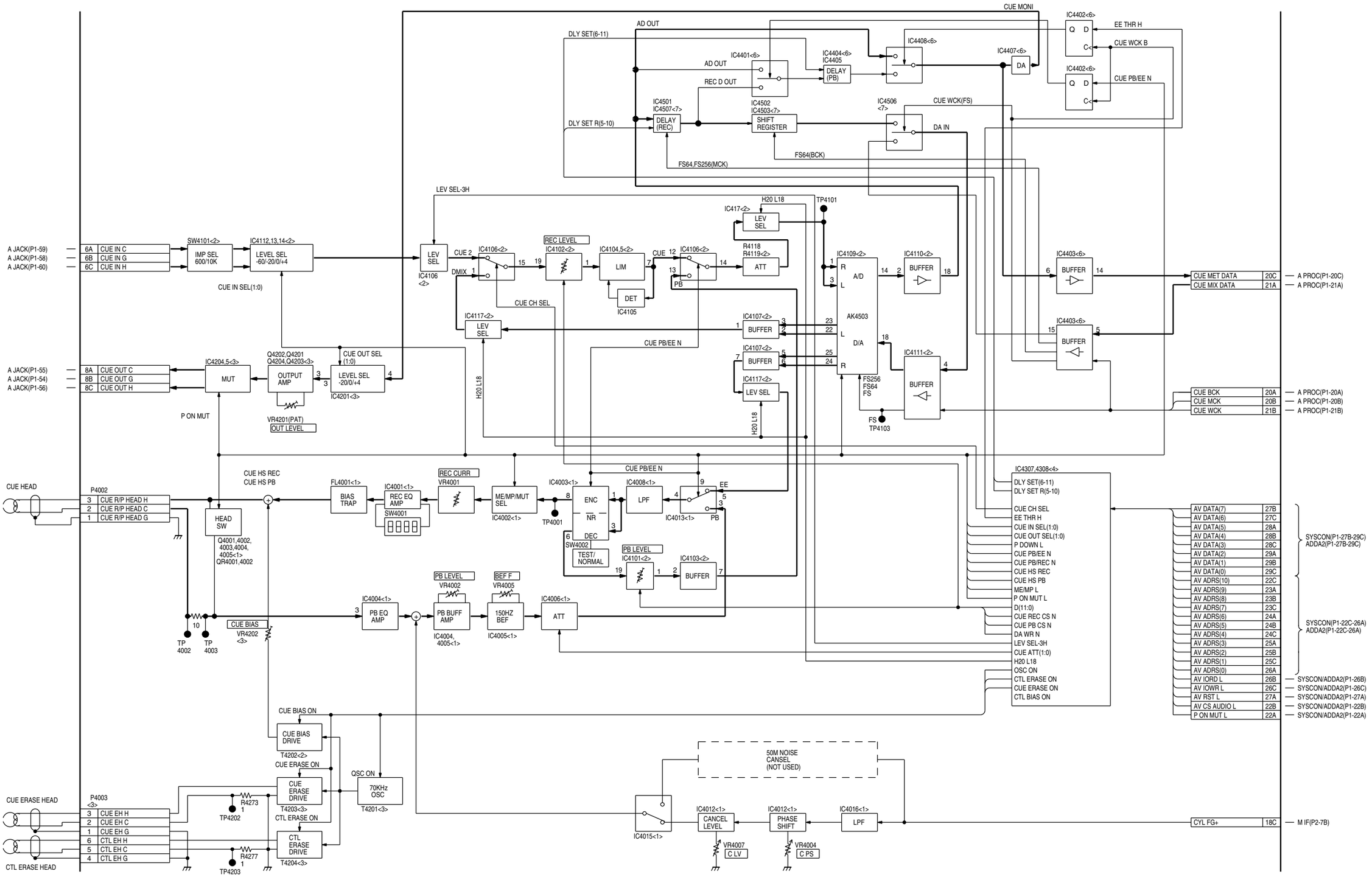

H3 EQ BLOCK DIAGRAM

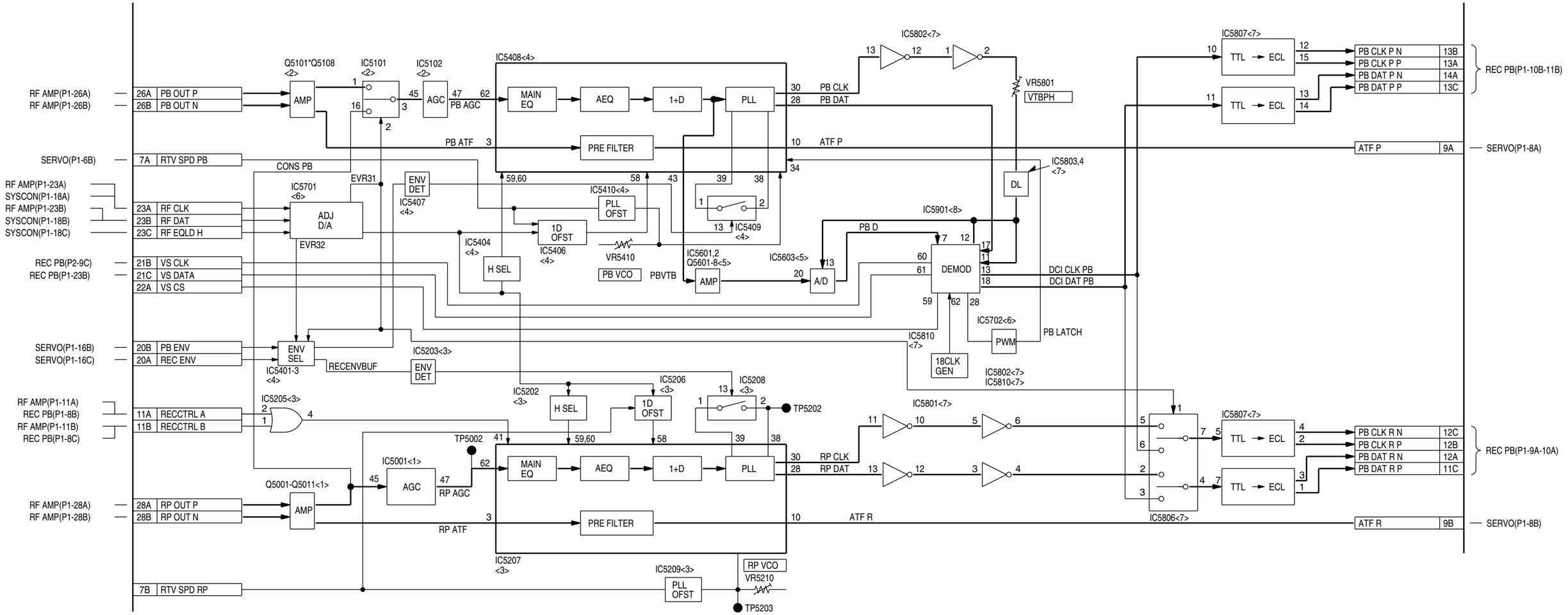

H4 RF AMP BLOCK DIAGRAM

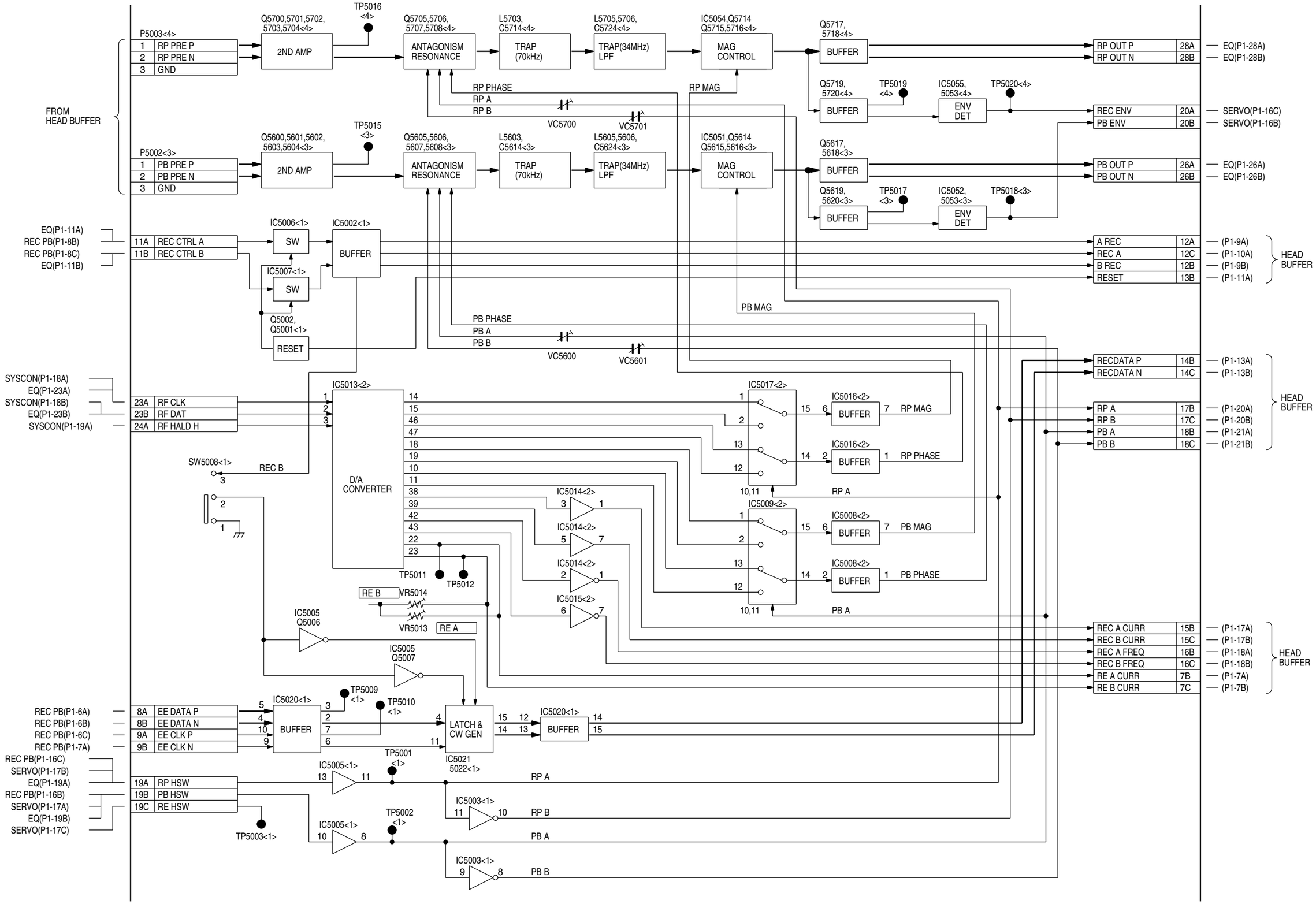

HEAD BUFFER BLOCK DIAGRAM

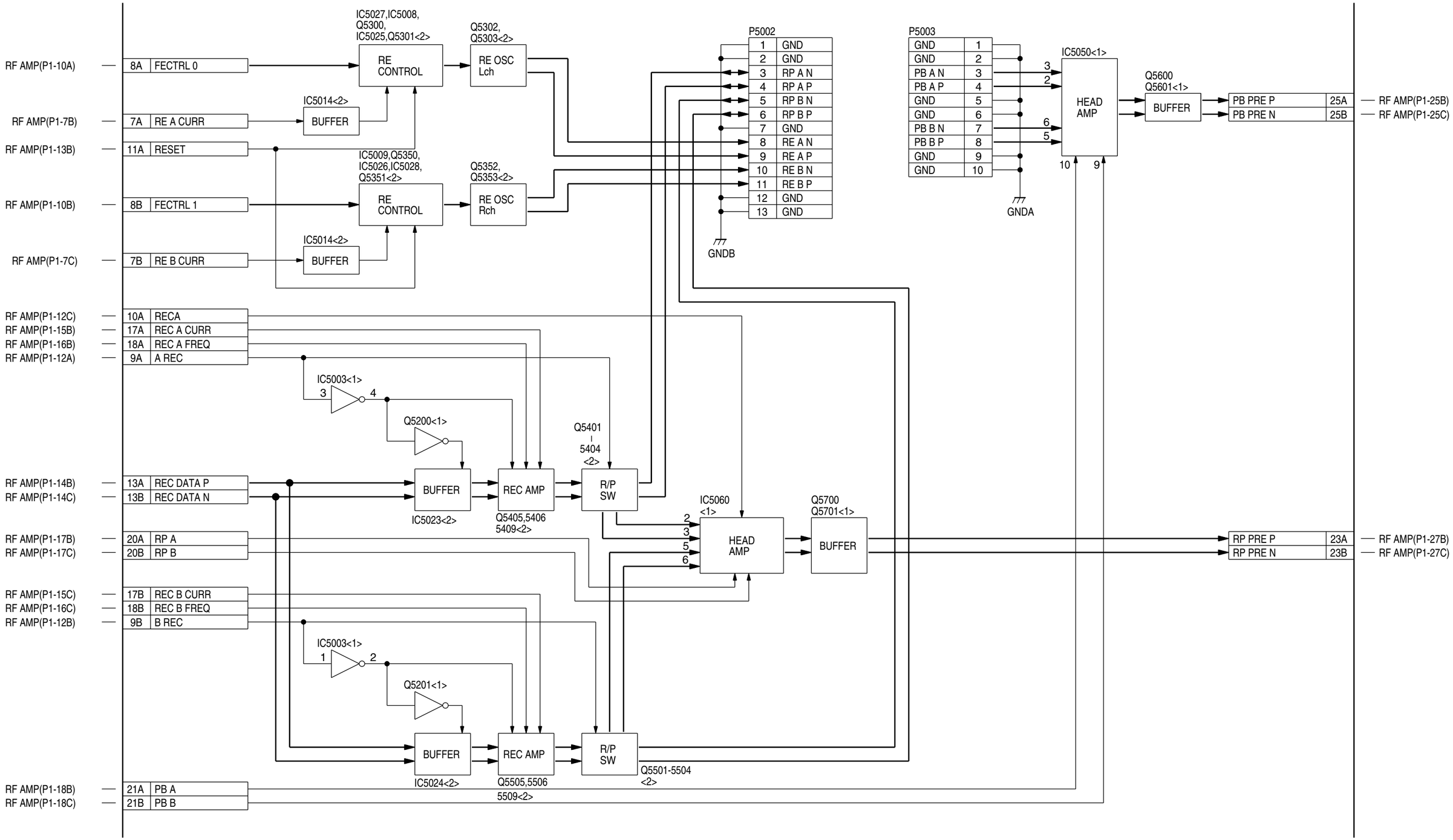

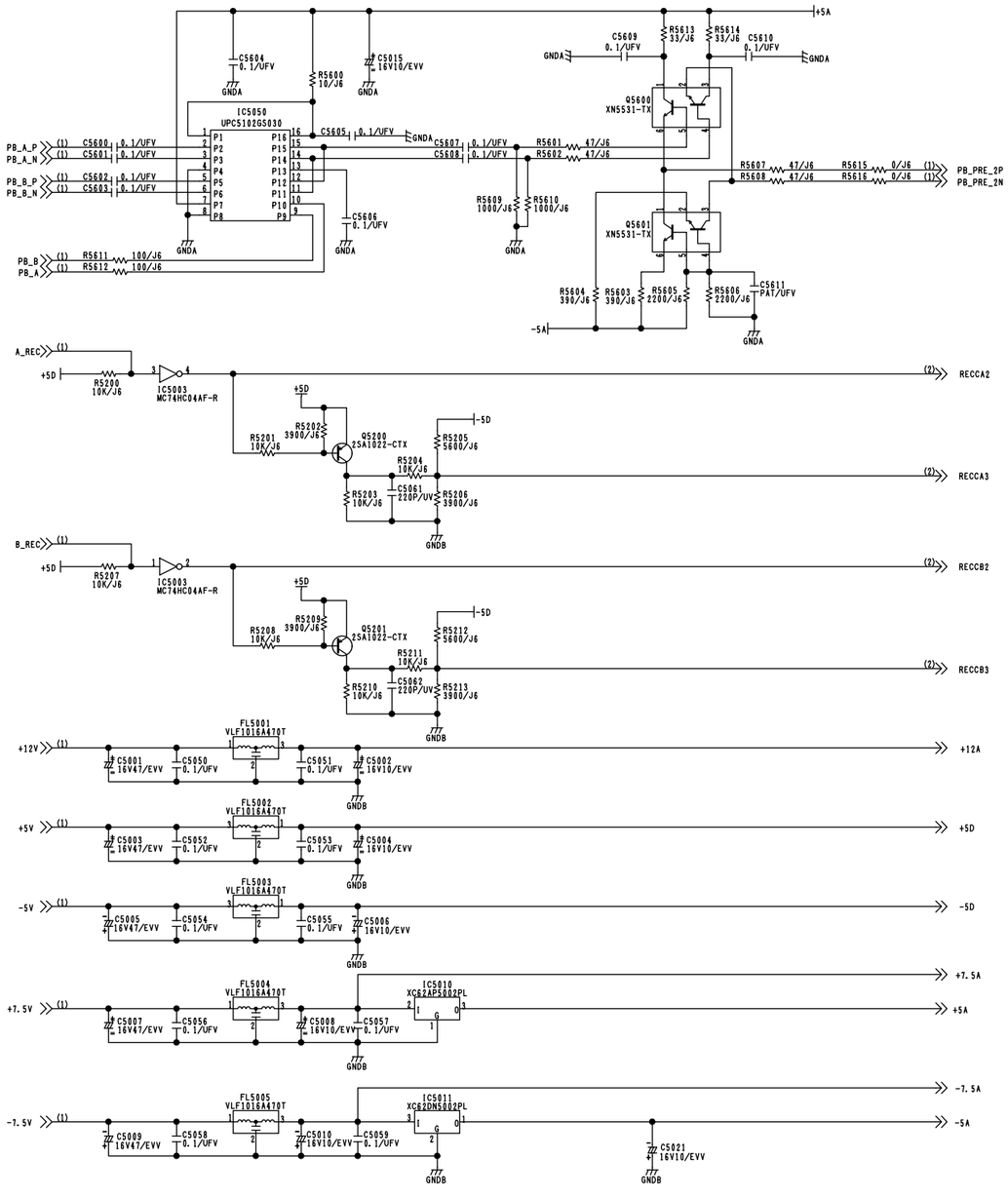

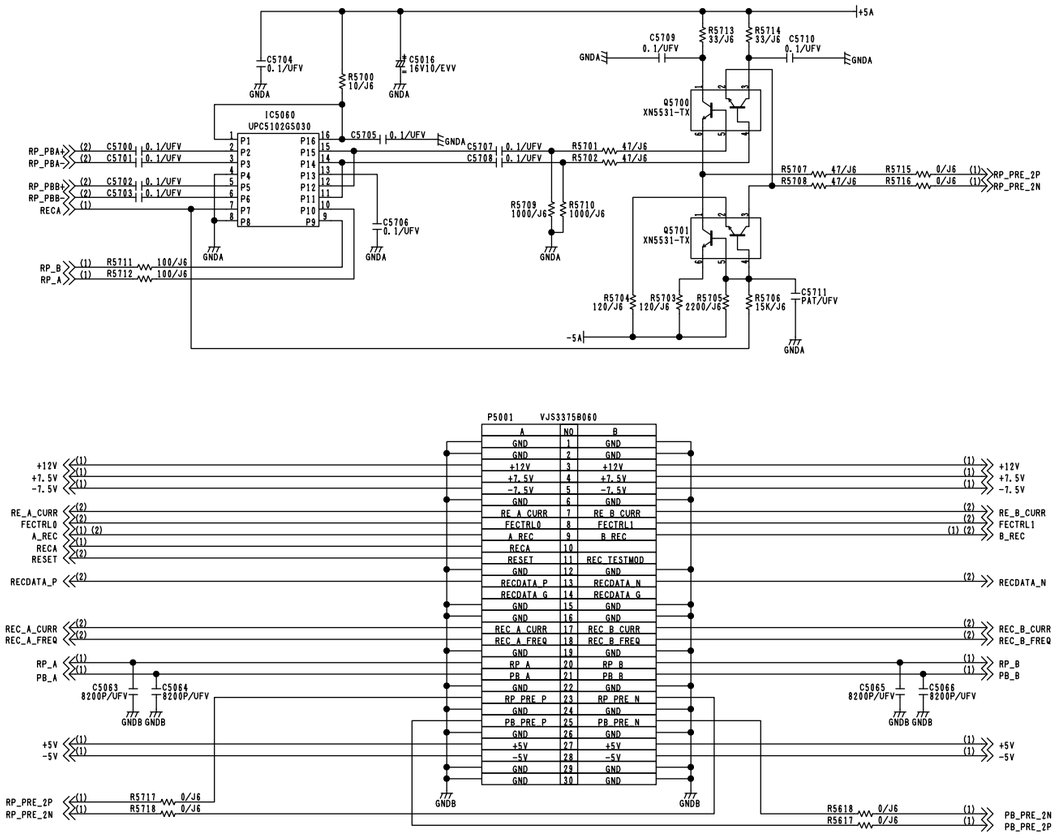

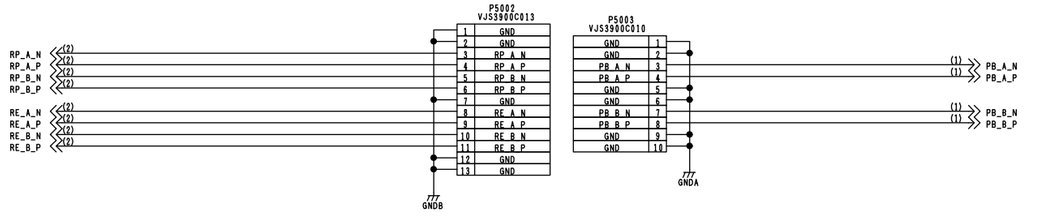

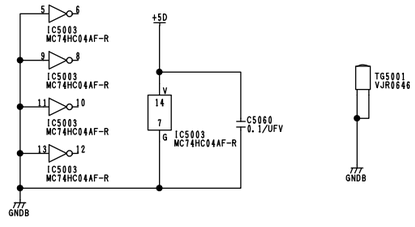

COMPONENT NAME	HEAD BUFF	01/02
CIRCUIT BOARD NO.	MODEL NO.	
VEP85151A		
	SCM195	

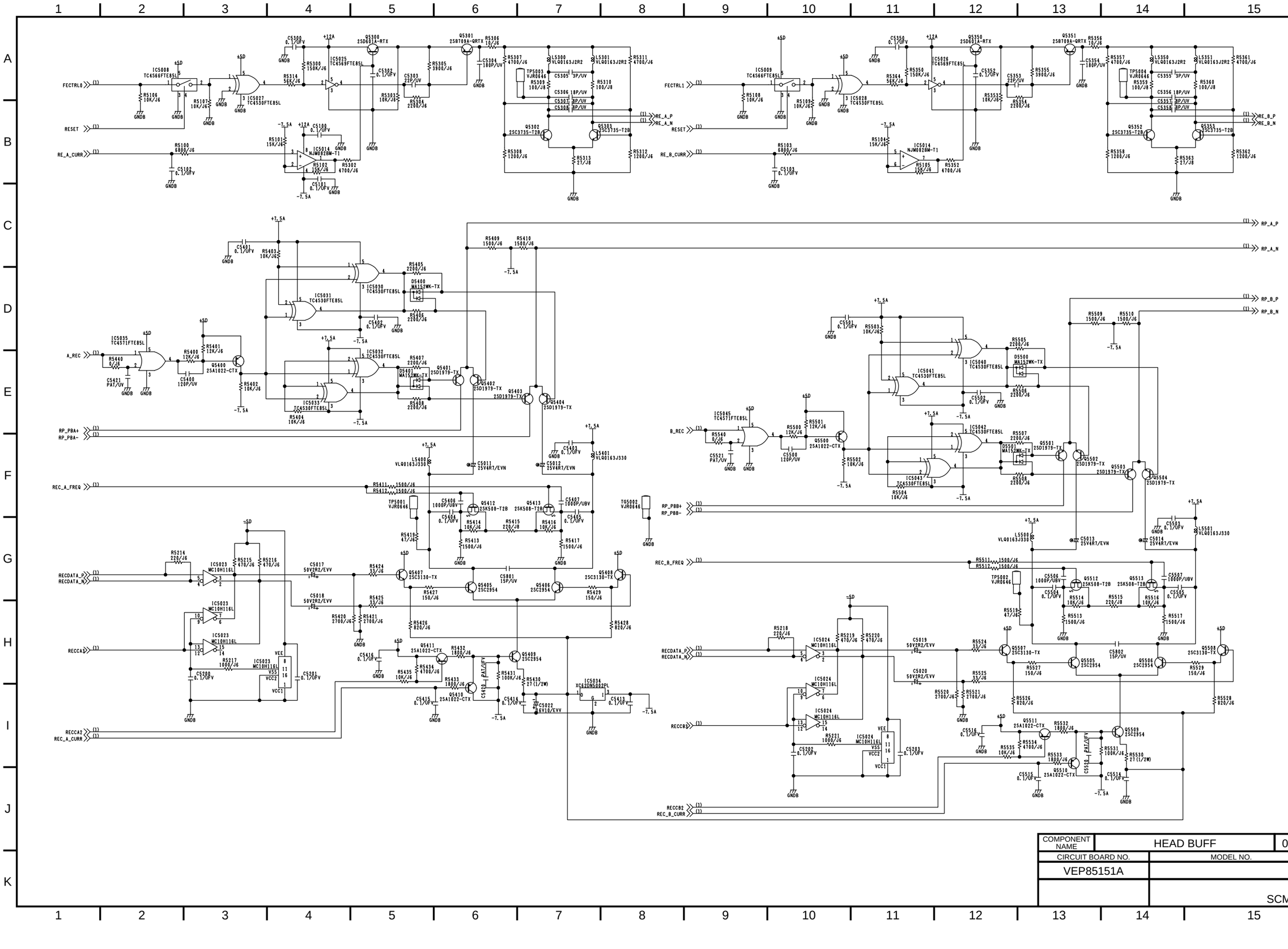

COMPONENT NAME	HEAD BUFF	02/02
CIRCUIT BOARD NO.	MODEL NO.	
VEP85151A		
		SCM196

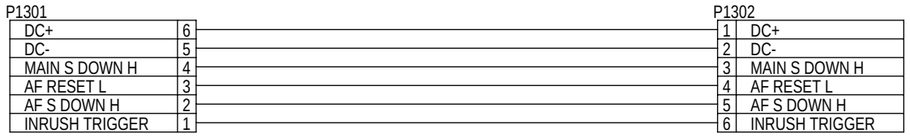

COMPONENT NAME	POWER CONNECT	01/01
CIRCUIT BOARD NO.	MODEL NO.	
VEP80A58A		
	SCM232	

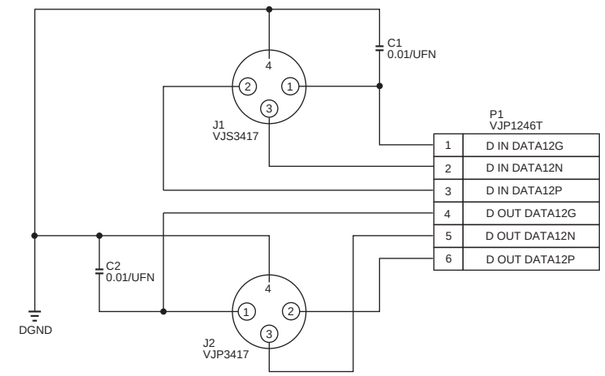

COMPONENT NAME	AES/EBU	01/01
CIRCUIT BOARD NO.	MODEL NO.	
VEP84157		
	SCM234	

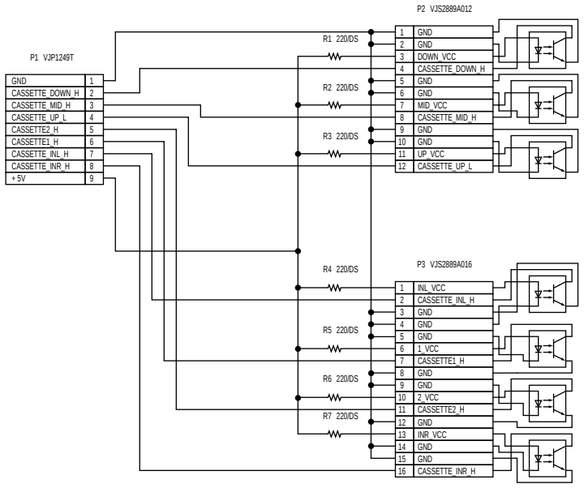

COMPONENT NAME	CARRIGE	01/01
CIRCUIT BOARD NO.	MODEL NO.	
VEP80856A		
	SCM233	

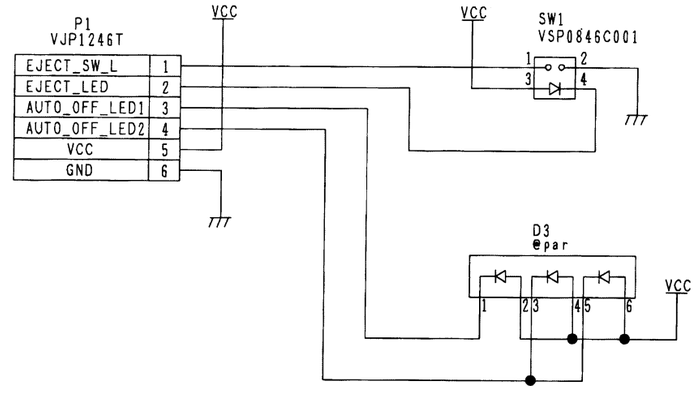

COMPONENT NAME	UP FRONT 2	01/01
CIRCUIT BOARD NO.	MODEL NO.	
VEP80852A		
	SCM235	

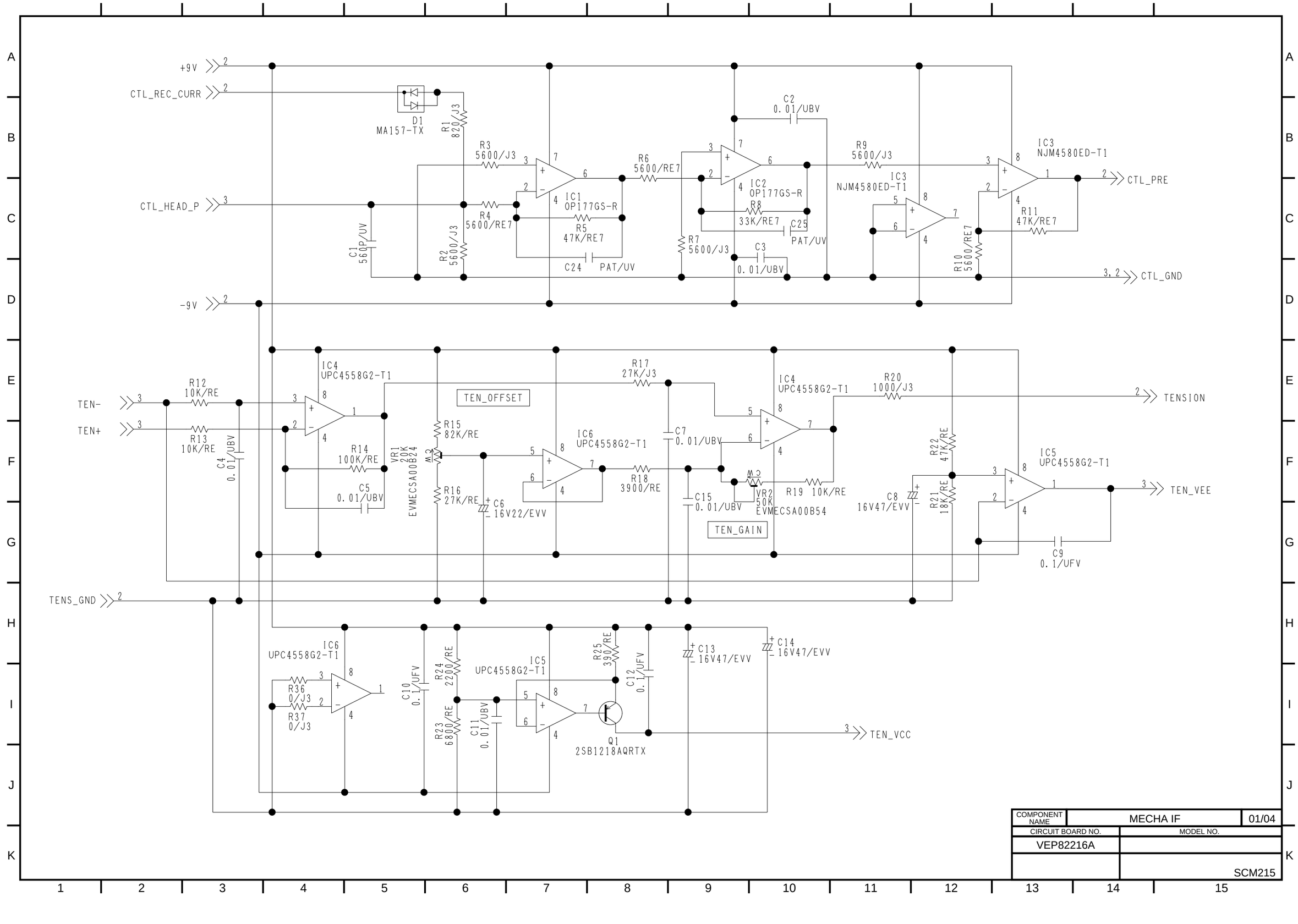

COMPONENT NAME	MECHA IF	01/04
CIRCUIT BOARD NO.	MODEL NO.	
VEP82216A		
	SCM215	

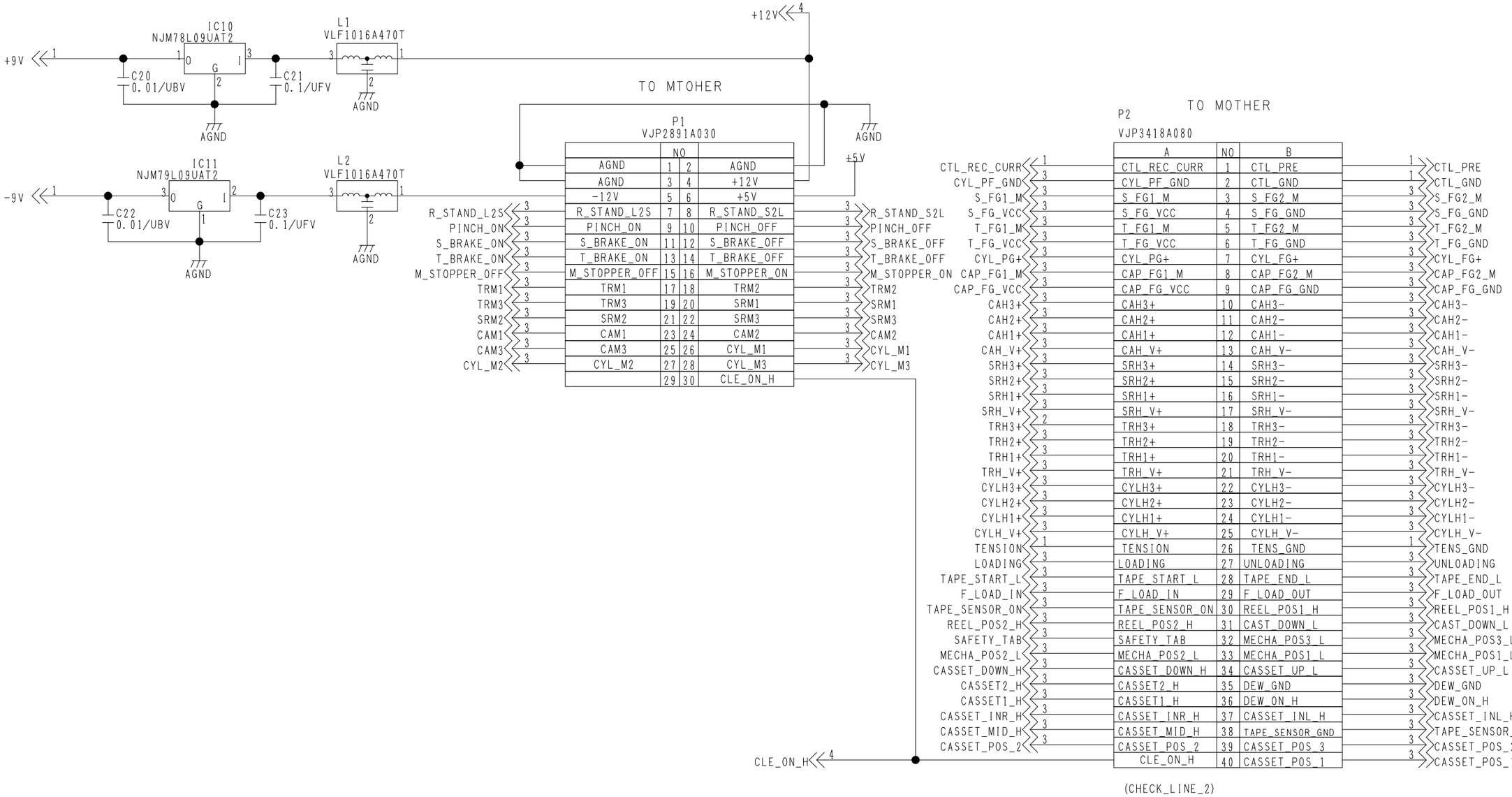

COMPONENT NAME	MECHA IF	02/04
CIRCUIT BOARD NO.	MODEL NO.	
VEP82216A		
	SCM216	

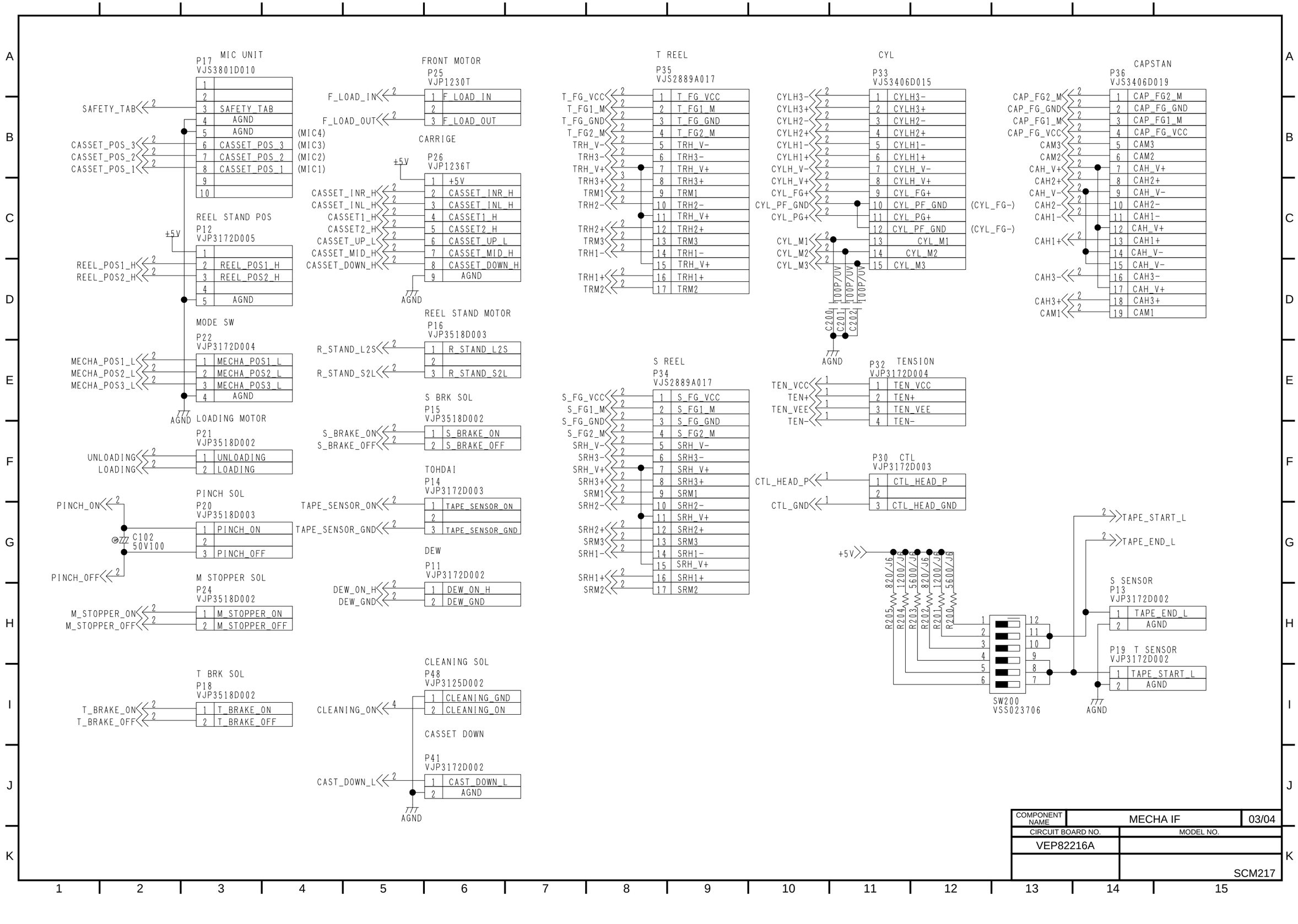
MIC UNIT
P17
VJS3801D010
SAFETY_TAB
AGND
AGND
CASSET_POS_3
CASSET_POS_2
CASSET_POS_1
(MIC4)
(MIC3)
(MIC2)
(MIC1)
REEL STAND POS
P12
VJP3172D0005
+5V
REEL_POS1_H
REEL_POS2_H
AGND
MODE SW
P22
VJP3172D0004
MECHA_POS1_L
MECHA_POS2_L
MECHA_POS3_L
AGND
LOADING MOTOR
P21
VJP3518D002
UNLOADING
LOADING
PINCH SOL
P20
VJP3518D003
PINCH_ON
C102
50V100
PINCH_OFF
M STOPPER SOL
P24
VJP3518D002
M_STOPPER_ON
M_STOPPER_OFF
T BRK SOL
P18
VJP3518D002
T_BRAKE_ON
T_BRAKE_OFF
FRONT MOTOR
P25
VJP1230T
F_LOAD_IN
F_LOAD_OUT
CARRIGE
P26
VJP1236T
+5V
CASSET_INR_H
CASSET_INL_H
CASSET1_H
CASSET2_H
CASSET_UP_L
CASSET_MID_H
CASSET_DOWN_H
AGND
REEL STAND MOTOR
P16
VJP3518D003
R_STAND_L2S
R_STAND_S2L
S BRK SOL
P15
VJP3518D002
S_BRAKE_ON
S_BRAKE_OFF
TOHDAI
P14
VJP3172D003
TAPE_SENSOR_ON
TAPE_SENSOR_GND
DEW
P11
VJP3172D002
DEW_ON_H
DEW_GND
CLEANING SOL
P48
VJP3125D002
CLEANING_GND
CLEANING_ON
CASSET DOWN
P41
VJP3172D002
CAST_DOWN_L
AGND
T REEL
P35
VJS2889A017
T_FG_VCC
T_FG1_M
T_FG_GND
T_FG2_M
TRH_V-
TRH3-
TRH_V+
TRH3+
TRM1
TRH2-
TRH_V+
TRH2+
TRM3
TRH1-
TRH_V+
TRH1+
TRM2
S REEL
P34
VJS2889A017
S_FG_VCC
S_FG1_M
S_FG_GND
S_FG2_M
SRH_V-
SRH3-
SRH_V+
SRH3+
SRM1
SRH2-
SRH_V+
SRH2+
SRM3
SRH1-
SRH_V+
SRH1+
SRM2
CYL
P33
VJS3406D015
CYLH3-
CYLH3+
CYLH2-
CYLH2+
CYLH1-
CYLH1+
CYLH_V-
CYLH_V+
CYL_FG+
CYL_PF_GND
CYL_PG+
CYL_M1
CYL_M2
CYL_M3
(CYL_FG-)
(CYL_FG-)
100P/UV
C200
C201
C202
AGND
TENSION
P32
VJP3172D0004
TEN_VCC
TEN+
TEN_VEE
TEN-
CTL
P30
VJP3172D003
CTL_HEAD_P
CTL_GND
CTL_HEAD_P
CTL_HEAD_GND
+5V
820/J6
1200/J6
5600/J6
R205
R204
R203
R202
R201
R200
SW200
VSS023706
TAPE_START_L
TAPE_END_L
S SENSOR
P13
VJP3172D002
TAPE_END_L
AGND
T SENSOR
P19
VJP3172D002
TAPE_START_L
AGND
CAPSTAN
P36
VJS3406D019
CAP_FG2_M
CAP_FG_GND
CAP_FG1_M
CAP_FG_VCC
CAM3
CAM2
CAH_V+
CAH2+
CAH_V-
CAH2-
CAH1-
CAH1+
CAH3-
CAH3+
CAM1
COMPONENT NAME
MECHA IF
03/04
CIRCUIT BOARD NO.
VEP82216A
MODEL NO.
SCM217

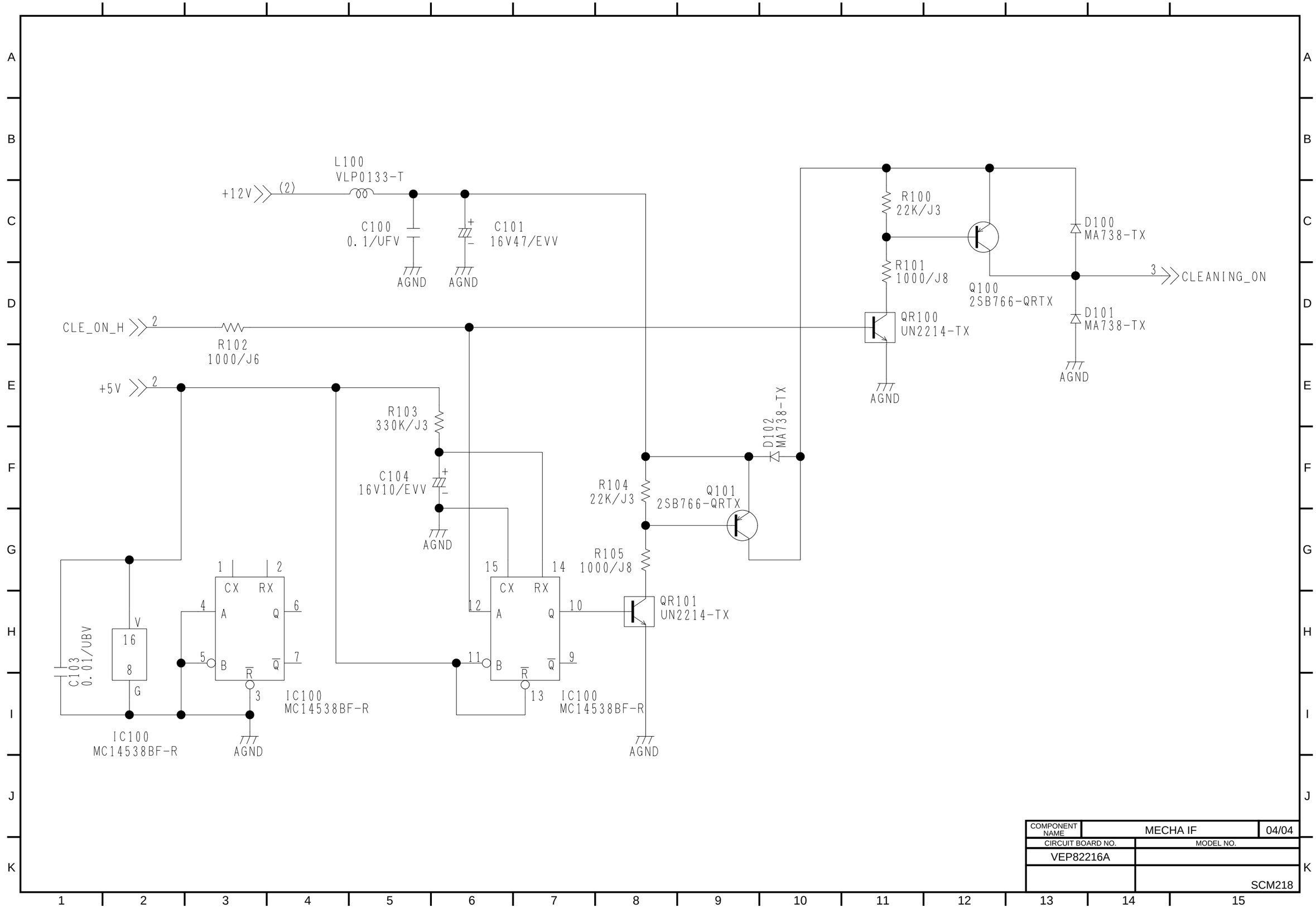

COMPONENT NAME	MECHA IF	04/04
CIRCUIT BOARD NO.	MODEL NO.	
VEP82216A		
		SCM218

SERVO (F1)

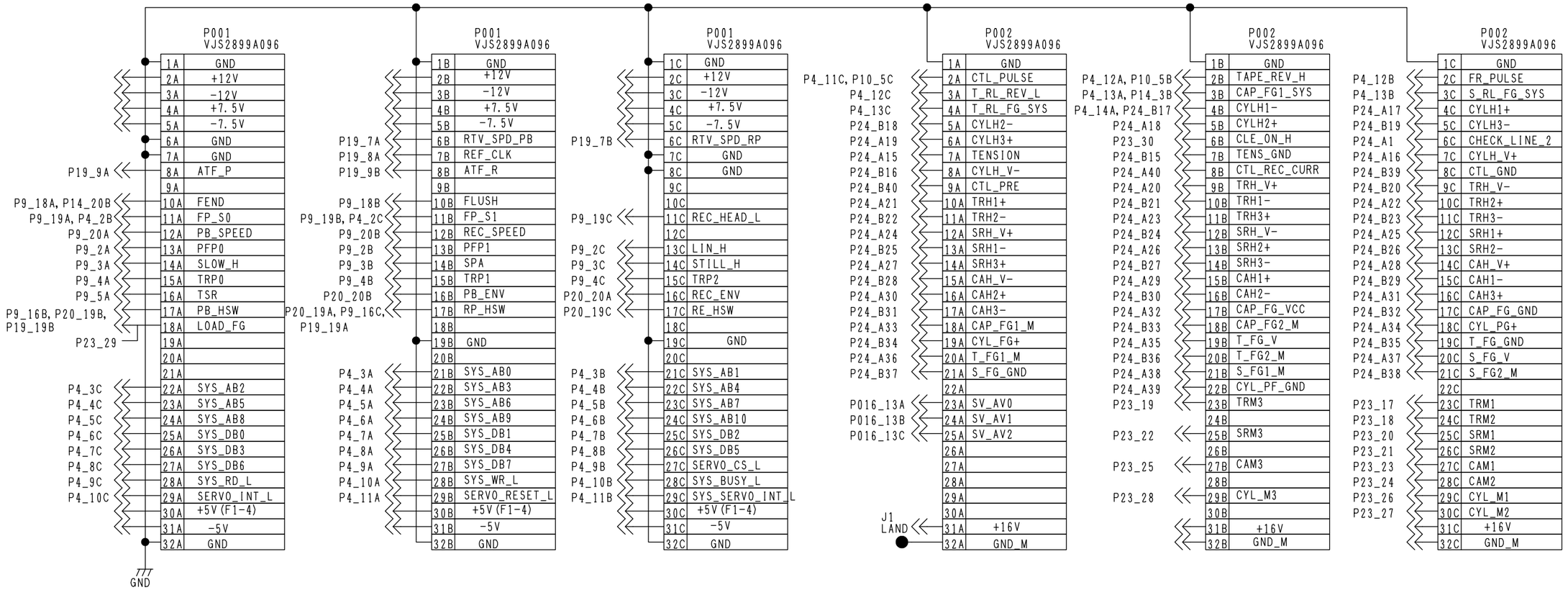

COMPONENT NAME	MOTHER	01/11
CIRCUIT BOARD NO.	MODEL NO.	
VEP80A48A		
	SCM197	

SYSCON (F2)

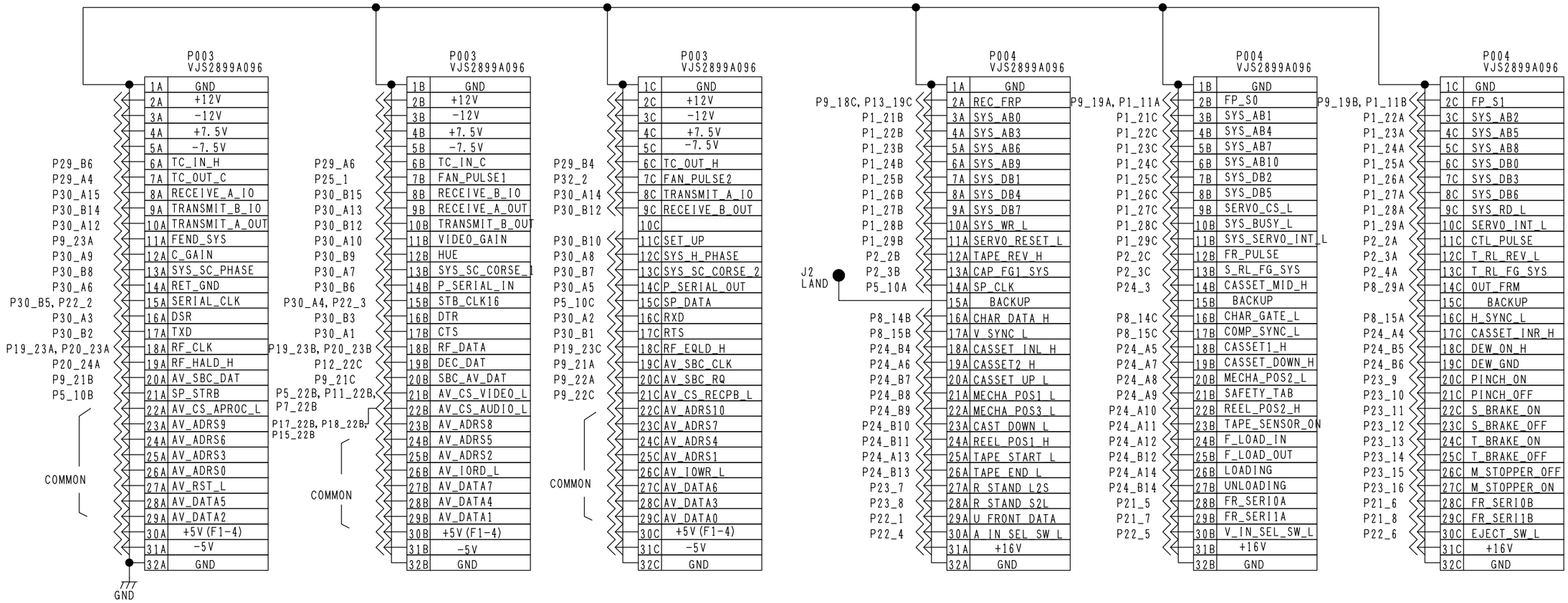

COMPONENT NAME	MOTHER	02/11
CIRCUIT BOARD NO.	MODEL NO.	
VEP80A48A		
	SCM198	

SIF (F3)

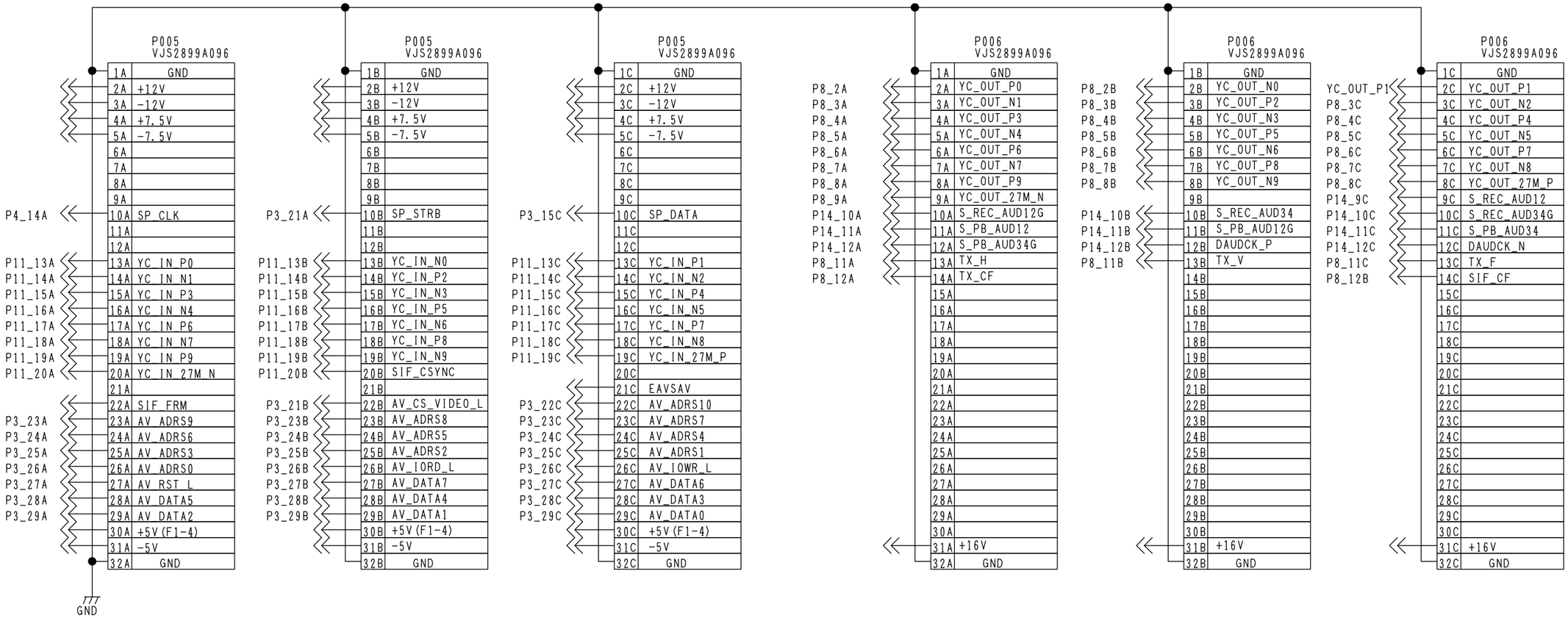

COMPONENT NAME	MOTHER	03/11
CIRCUIT BOARD NO.	MODEL NO.	
VEP80A48A		
	SCM199	

V_OUT (F4)

P007
VJS2899A096

	1A	GND
	2A	+12V
	3A	-12V
	4A	+7.5V
	5A	-7.5V
P30_B26	6A	REF_IN_G
	7A	
P30_B24	8A	VIDEO_OUT1_G
P30_B23	9A	VIDEO_OUT2_G
P30_B22	10A	VIDEO_OUT3_G
P30_B21	11A	Y_OUT_G
P30_B19	12A	PR_OUT_G
P30_B20	13A	PB_OUT_G
P29_A/B21	14A	4P_Y_OUT_G
P29_A/B19	15A	4P_C_OUT_G
	16A	
	17A	
	18A	
	19A	
	20A	
P9_16A	21A	VBLK_O_CSYNC
	22A	
P3_23A	23A	AV_ADRS9
P3_24A	24A	AV_ADRS6
P3_25A	25A	AV_ADRS3
P3_26A	26A	AV_ADRS0
P3_27A	27A	AV_RST_L
P3_28A	28A	AV_DATA5
P3_29A	29A	AV_DATA2
	30A	+5V (F1-4)
	31A	-5V
	32A	GND

GND

P007
VJS2899A096

	1B	GND
	2B	+12V
	3B	-12V
	4B	+7.5V
	5B	-7.5V
	6B	
	7B	
	8B	
	9B	
	10B	
	11B	
	12B	
	13B	
	14B	
	15B	
	16B	
	17B	
	18B	
	19B	
	20B	
	21B	
P3_21B	22B	AV_CS_VIDEO_L
P3_23B	23B	AV_ADRS8
P3_24B	24B	AV_ADRS5
P3_25B	25B	AV_ADRS2
P3_26B	26B	AV_IORD_L
P3_27B	27B	AV_DATA7
P3_28B	28B	AV_DATA4
P3_29B	29B	AV_DATA1
	30B	+5V (F1-4)
	31B	-5V
	32B	GND

P007
VJS2899A096

	1C	GND
	2C	+12V
	3C	-12V
	4C	+7.5V
	5C	-7.5V
P30_A26	6C	REF_IN
	7C	
P30_A24	8C	VIDEO_OUT1
P30_A23	9C	VIDEO_OUT2
P30_A22	10C	VIDEO_OUT3
P30_A21	11C	Y_OUT
P30_A19	12C	PR_OUT
P30_A20	13C	PB_OUT
P29_B22	14C	4P_Y_OUT
P29_B20	15C	4P_C_OUT
WIDE_OUT_L	16C	WIDE_OUT_L
	17C	
	18C	
	19C	
P9_17B	20C	TXT_SIG
P9_17A	21C	TXT_GATE
P3_22C	22C	AV_ADRS10
P3_23C	23C	AV_ADRS7
P3_24C	24C	AV_ADRS4
P3_25C	25C	AV_ADRS1
P3_26C	26C	AV_IOWR_L
P3_27C	27C	AV_DATA6
P3_28C	28C	AV_DATA3
P3_29C	29C	AV_DATA0
	30C	+5V (F1-4)
	31C	-5V
	32C	GND

P008
VJS2899A096

	1A	GND
P6_2A	2A	YC_OUT_P0
P6_3A	3A	YC_OUT_N1
P6_4A	4A	YC_OUT_P3
P6_5A	5A	YC_OUT_N4
P6_6A	6A	YC_OUT_P6
P6_7A	7A	YC_OUT_N7
P6_8A	8A	YC_OUT_P9
P6_9A	9A	YC_OUT_27M_N
	10A	
P6_13A	11A	TX_H
P6_14A	12A	TX_CF
	13A	
	14A	
P4_16C	15A	H_SYNC_L
	16A	
	17A	
	18A	
	19A	
	20A	
	21A	
P10_22A	22A	PB_C_DATA2
P10_23A	23A	PB_C_DATA5
P10_24A	24A	PB_Y_DATA0
P10_25A	25A	PB_Y_DATA3
P10_26A	26A	PB_Y_DATA6
P10_27A	27A	REF_FRM
	28A	
P4_14C	29A	OUT_FRM
	30A	
	31A	+16V
	32A	GND

P008
VJS2899A096

	1B	GND
P6_2B	2B	
P6_3B	3B	YC_OUT_P2
P6_4B	4B	YC_OUT_N3
P6_5B	5B	YC_OUT_P5
P6_6B	6B	YC_OUT_N6
P6_7B	7B	YC_OUT_P8
P6_8B	8B	YC_OUT_N9
P9_17C	9B	LPF_SEL1
	10B	INCOME_FRM
P6_13B	11B	TX_V
P6_14C	12B	SIF_CF
P14_13B	13B	REF_FRAME
P4_16A	14B	CHAR_DATA_H
P4_17A	15B	V_SYNC_L
	16B	
	17B	
	18B	
	19B	
	20B	
P10_21B	21B	PB_C_DATA0
P10_22B	22B	PB_C_DATA3
P10_23B	23B	PB_C_DATA6
P10_24B	24B	PB_Y_DATA1
P10_25B	25B	PB_Y_DATA4
P10_26B	26B	PB_Y_DATA7
P10_27B	27B	REF_CF0
P10_28B	28B	OUT_135M_P
P10_29B	29B	OUT_VIP
	30B	
	31B	+16V
	32B	GND

P008
VJS2899A096

	1C	GND
P6_2C	2C	YC_OUT_P1
P6_3C	3C	YC_OUT_N2
P6_4C	4C	YC_OUT_P4
P6_5C	5C	YC_OUT_N5
P6_6C	6C	YC_OUT_P7
P6_7C	7C	YC_OUT_N8
P6_8C	8C	YC_OUT_27M_P
	9C	
	10C	
P6_13C	11C	TX_F
	12C	
P14_13C	13C	REF_HST_N
P4_16B	14C	CHAR_GATE_L
P4_17B	15C	COMP_SYNC_L
	16C	
	17C	
	18C	
	19C	
	20C	
P10_21C	21C	PB_C_DATA1
P10_22C	22C	PB_C_DATA4
P10_23C	23C	PB_C_DATA7
P10_24C	24C	PB_Y_DATA2
P10_25C	25C	PB_Y_DATA5
P10_26C	26C	PB_FRM
P10_27C	27C	REF_CF1
P10_28C	28C	OUT_135M_N
P10_29C	29C	OUT_RDHD
	30C	
	31C	+16V
	32C	GND

COMPONENT NAME	MOTHER	04/11
CIRCUIT BOARD NO.	MODEL NO.	
VEP80A48A		
	SCM200	

REC/PB (F5)

P009 VJS2899A096

	1A	GND
	2A	+12V
	3A	−12V
	4A	+7.5V
	5A	−7.5V
P20_8A	6A	EE_DATA_P
P20_9B	7A	EE_CLK_N
P20_10C	8A	REC1
P19_11C	9A	PB_DAT_R_P
P19_12C	10A	PB_CLK_R_N
P19_13C	11A	PB_CLK_P_P
P19_18B	12A	EQ_12MH_N
P12_28A	13A	VBLK_I_CSYNC
P12_20A	14A	VBLK_CLK
P19_17C	15A	EQ_HOLD_H
P7_21A	16A	VBLK_O_CSYNC
P7_21C	17A	TXT_GATE
P1_10A, P14_20B	18A	FEND
P1_11A, P4_2B	19A	FP_S0
P1_12A	20A	PB_SPEED
P3_19C	21A	AV_SBC_CLK
P3_20C	22A	AV_SBC_RQ
P3_11A	23A	FEND_SYS
P3_24A	24A	AV_ADRS6
P3_25A	25A	AV_ADRS3
P3_26A	26A	AV_ADRS0
P3_27A	27A	AV_RST_L
P3_28A	28A	AV_DATA5
P3_29A	29A	AV_DATA2
	30A	+5V
	31A	−5V
	32A	GND

GND

P009 VJS2899A096

	1B	GND
	2B	+12V
	3B	−12V
	4B	+7.5V
	5B	−7.5V
P20_8B	6B	EE_DATA_N
P20_10A	7B	FECTRL0
P20_11A, P19_11A	8B	RECCTRL_A
P19_12A	9B	PB_DAT_R_N
P19_13A	10B	PB_DAT_P_P
P19_14A	11B	PB_CLK_P_N
P12_30A	12B	VBLK_SL_CLK
P12_19B	13B	VBLK_BW1
P12_19C	14B	VBLK_SDI
P3_23B	15B	AV_ADRS8
P19_19A, P20_19A, P1_17A	16B	PB_HSW
P7_20C	17B	TXT_SIG
P1_10B	18B	FLUSH
P1_11B, P4_2C	19B	FP_S1
P1_12B	20B	REC_SPEED
P3_20A	21B	AV_SBC_DAT
P19_19C	22B	PB_FRP
P19_21C	23B	VS_DATA
P3_24B	24B	AV_ADRS5
P3_25B	25B	AV_ADRS2
P3_26B	26B	AV_IORD_L
P3_27B	27B	AV_DATA7
P3_28B	28B	AV_DATA4
P3_29B	29B	AV_DATA1
	30B	+5V
	31B	−5V
	32B	GND

P009 VJS2899A096

	1C	GND
	2C	+12V
	3C	−12V
	4C	+7.5V
	5C	−7.5V
P20_9A	6C	EE_CLK_P
P20_10B	7C	FECTRL1
P20_11B, P19_11B	8C	RECCTRL_B
P19_12B	9C	PB_CLK_R_P
P19_13B	10C	PB_DAT_P_N
P19_18A	11C	EQ_12MH_P
P12_30B	12C	VBLK_SL_DATA
P12_15C	13C	VBLK_BW2
P12_20B	14C	VBLK_CS
	15C	
P1_17B, P19_19B, P20_19B	16C	RP_HSW
P8_9A	17C	LPF_SEL1
P4_2A	18C	REC_FRP
P1_11C	19C	REC_HEAD_L
P19_20C	20C	PBH
P3_20B	21C	SBC_AV_DAT
P3_21C	22C	AV_CS_RECPB_L
P3_23C	23C	AV_ADRS7
P3_24C	24C	AV_ADRS4
P3_25C	25C	AV_ADRS1
P3_26C	26C	AV_IOWR_L
P3_27C	27C	AV_DATA6
P3_28C	28C	AV_DATA3
P3_29C	29C	AV_DATA0
	30C	+5V
	31C	−5V
	32C	GND

P010 VJS2899A096

	1A	GND
P1_13A	2A	PFP0
P1_14A	3A	SLOW_H
P1_15A	4A	TRP0
P1_16A	5A	TSR
P14_6A	6A	18M_CK_P
P12_7A	7A	TBC_RCK_P
P12_8A	8A	TBC_RHRST
P12_9A	9A	INCOME_CF1
P12_10A	10A	REC_C_DATA7
P12_11A	11A	REC_C_DATA4
P12_12A	12A	REC_C_DATA1
P12_13A	13A	REC_Y_DATA6
P12_14A	14A	REC_Y_DATA3
P12_15A	15A	REC_Y_DATA0
P14_16A	16A	FS256_N
P14_17A	17A	FS64_PB
P14_18A	18A	REC_FRM
P14_19A	19A	PB_DATA12
P14_20A	20A	FRM5
	21A	
P8_22A	22A	PB_C_DATA2
P8_23A	23A	PB_C_DATA5
P8_24A	24A	PB_Y_DATA0
P8_25A	25A	PB_Y_DATA3
P8_26A	26A	PB_Y_DATA6
P8_27A	27A	REF_FRM
	28A	
P8_29A	29A	OUT_FRM
P24_B1	30A	CASSET_POS_1
	31A	+3V
	32A	GND

P010 VJS2899A096

	1B	GND
P1_13B	2B	PFP1
P1_14B	3B	SPA
P1_15B	4B	TRP1
P2_2B, P14_5B	5B	TAPE_REV_H
P14_6B	6B	18M_CK_N
P12_7B	7B	TBC_RCK_N
P12_8B	8B	INCOME_FRM
P19_21A	9B	
P12_10B	10B	REC_C_DATA6
P12_11B	11B	REC_C_DATA3
P12_12B	12B	REC_C_DATA0
P12_13B	13B	REC_Y_DATA5
P12_14B	14B	REC_Y_DATA2
P14_15B	15B	REC_DATA12
P14_16B	16B	FS256_P
P14_20C	17B	FS_PB34
P14_18B	18B	INH
P14_19B	19B	PB_DATA34
P14_21A	20B	FS64_PB34
P8_21B	21B	PB_C_DATA0
P8_22B	22B	PB_C_DATA3
P8_23B	23B	PB_C_DATA6
P8_24B	24B	PB_Y_DATA1
P8_25B	25B	PB_Y_DATA4
P8_26B	26B	PB_Y_DATA7
P8_27B	27B	REF_CF0
P8_28B	28B	OUT_135M_P
P8_29B	29B	OUT_VIP
P24_A2	30B	CASSET_POS_2
	31B	+3V
	32B	GND

P010 VJS2899A096

	1C	GND
P1_13C	2C	LIN_H
P1_14C	3C	STILL_H
P1_15C	4C	TRP2
P2_2A	5C	CTL_PULSE
P19_22A	6C	VS_CS
P12_7C	7C	TBC_RVRST
P12_8C	8C	INCOME_CF0
P19_21B	9C	VS_CLK
P12_10C	10C	REC_C_DATA5
P12_11C	11C	REC_C_DATA2
P12_12C	12C	REC_Y_DATA7
P12_13C	13C	REC_Y_DATA4
P12_14C	14C	REC_Y_DATA1
P14_15C	15C	REC_DATA34
P14_16C	16C	FS
P14_17C	17C	FS64
P14_18C	18C	FS_P
P14_19C	19C	PB_FRM_A
P14_21B	20C	PB_FRM_A2
P8_21C	21C	PB_C_DATA1
P8_22C	22C	PB_C_DATA4
P8_23C	23C	PB_C_DATA7
P8_24C	24C	PB_Y_DATA2
P8_25C	25C	PB_Y_DATA5
P8_26C	26C	PB_FRM
P8_27C	27C	REF_CF1
P8_28C	28C	OUT_135M_N
P8_29C	29C	OUT_RDHD
P24_B2	30C	CASSET_POS_3
	31C	+3V
	32C	GND

COMPONENT NAME	MOTHER	05/11
CIRCUIT BOARD NO.	MODEL NO.	
VEP80A48A		
	SCM201	

VIN (F6)

P011 VJS2899A096

P30_B30	6A	VIDEO_IN_G
P30_B29	7A	Y_IN_G
P30_B28	8A	PB_IN_G
P30_B27	9A	PR_IN_G
P29_A/B25	10A	4P_Y_IN_G
P29_A/B23	11A	4P_C_IN_G
	12A	
P5_13A	13A	YC_IN_P0
P5_14A	14A	YC_IN_N1
P5_15A	15A	YC_IN_P3
P5_16A	16A	YC_IN_N4
P5_17A	17A	YC_IN_P6
P5_18A	18A	YC_IN_N7
P5_19A	19A	YC_IN_P9
P5_20A	20A	YC_IN_27M_N
	21A	
P5_22A	22A	SIF_FRM
P3_23A	23A	AV_ADRS9
P3_24A	24A	AV_ADRS6
P3_25A	25A	AV_ADRS3
P3_26A	26A	AV_ADRS0
P3_27A	27A	AV_RST_L
P3_28A	28A	AV_DATA5
P3_29A	29A	AV_DATA2
	30A	+5V
	31A	−5V
	32A	GND

GND

P011 VJS2899A096

	1B	GND
	2B	+12V
	3B	−12V
	4B	+7.5V
	5B	−7.5V
	6B	
	7B	
	8B	
	9B	
	10B	
	11B	
	12B	
P5_13B	13B	YC_IN_N0
P5_14B	14B	YC_IN_P2
P5_15B	15B	YC_IN_N3
P5_16B	16B	YC_IN_P5
P5_17B	17B	YC_IN_N6
P5_18B	18B	YC_IN_P8
P5_19B	19B	YC_IN_N9
P5_20B	20B	SIF_CSYNC
	21B	
P3_21B	22B	AV_CS_VIDEO_L
P3_23B	23B	AV_ADRS8
P3_24B	24B	AV_ADRS5
P3_25B	25B	AV_ADRS2
P3_26B	26B	AV_IORD_L
P3_27B	27B	AV_DATA7
P3_28B	28B	AV_DATA4
P3_29B	29B	AV_DATA1
	30B	+5V
	31B	−5V
	32B	GND

P011 VJS2899A096

	1C	GND
	2C	+12V
	3C	−12V
	4C	+7.5V
	5C	−7.5V
P30_A30	6C	VIDEO_IN
P30_A29	7C	Y_IN
P30_A28	8C	PB_IN
P30_A27	9C	PR_IN
P29_B26	10C	4P_Y_IN
P29_B24	11C	4P_C_IN
P29_24A	12C	WIDE_IN_L
P5_13C	13C	YC_IN_P1
P5_14C	14C	YC_IN_N2
P5_15C	15C	YC_IN_P4
P5_16C	16C	YC_IN_N5
P5_17C	17C	YC_IN_P7
P5_18C	18C	YC_IN_N8
P5_19C	19C	YC_IN_27M_P
	20C	
P5_21C	21C	EAVSAV
P3_22C	22C	AV_ADRS10
P3_23C	23C	AV_ADRS7
P3_24C	24C	AV_ADRS4
P3_25C	25C	AV_ADRS1
P3_26C	26C	AV_IOWR_L
P3_27C	27C	AV_DATA6
P3_28C	28C	AV_DATA3
P3_29C	29C	AV_DATA0
	30C	+5V
	31C	−5V
	32C	GND

P012 VJS2899A096

	1A	GND
	2A	
	3A	
	4A	
	5A	
	6A	
P10_7A	7A	TBC_RCK_P
P10_8A	8A	TBC_RHRST
P10_9A	9A	INCOME_CF1
P10_10A	10A	REC_C_DATA7
P10_11A	11A	REC_C_DATA4
P10_12A	12A	REC_C_DATA1
P10_13A	13A	REC_Y_DATA6
P10_14A	14A	REC_Y_DATA3
P10_15A	15A	REC_Y_DATA0
P14_13A	16A	INCOM_HST_N
	17A	
	18A	
	19A	
P9_14A	20A	VBLK_CLK
	21A	
	22A	
	23A	
	24A	
	25A	
	26A	
	27A	
P9_13A	28A	VBLK_I_CSYNC
	29A	
P9_12B	30A	VBLK_SL_CLK
	31A	+16V
	32A	GND

P012 VJS2899A096

	1B	GND
	2B	
	3B	
	4B	
	5B	
	6B	
P10_7B	7B	TBC_RCK_N
P10_8B	8B	INCOME_FRM
	9B	
P10_10B	10B	REC_C_DATA6
P10_11B	11B	REC_C_DATA3
P10_12B	12B	REC_C_DATA0
P10_13B	13B	REC_Y_DATA5
P10_14B	14B	REC_Y_DATA2
	15B	
	16B	
	17B	
	18B	
P9_13B	19B	VBLK_BW1
P9_14C	20B	VBLK_CS
	21B	
	22B	
	23B	
	24B	
	25B	
	26B	
	27B	
	28B	
	29B	
P9_12C	30B	VBLK_SL_DATA
	31B	+16V
	32B	GND

P012 VJS2899A096

	1C	GND
	2C	
	3C	
	4C	
	5C	
	6C	
P10_7C	7C	TBC_RVRST
P10_8C	8C	INCOME_CF0
	9C	
P10_10C	10C	REC_C_DATA5
P10_11C	11C	REC_C_DATA2
P10_12C	12C	REC_Y_DATA7
P10_13C	13C	REC_Y_DATA4
P10_14C	14C	REC_Y_DATA1
P9_13C	15C	VBLK_BW2
	16C	
	17C	
	18C	
P9_12B	19C	VBLK_SDI
	20C	
	21C	
P3_19B	22C	DEC_DAT
	23C	
	24C	
	25C	
	26C	
	27C	
	28C	
	29C	
	30C	
	31C	+16V
	32C	GND

COMPONENT NAME	MOTHER	06/11
CIRCUIT BOARD NO.	MODEL NO.	
VEP80A48A		
	SCM202	

A_PROC (F7)

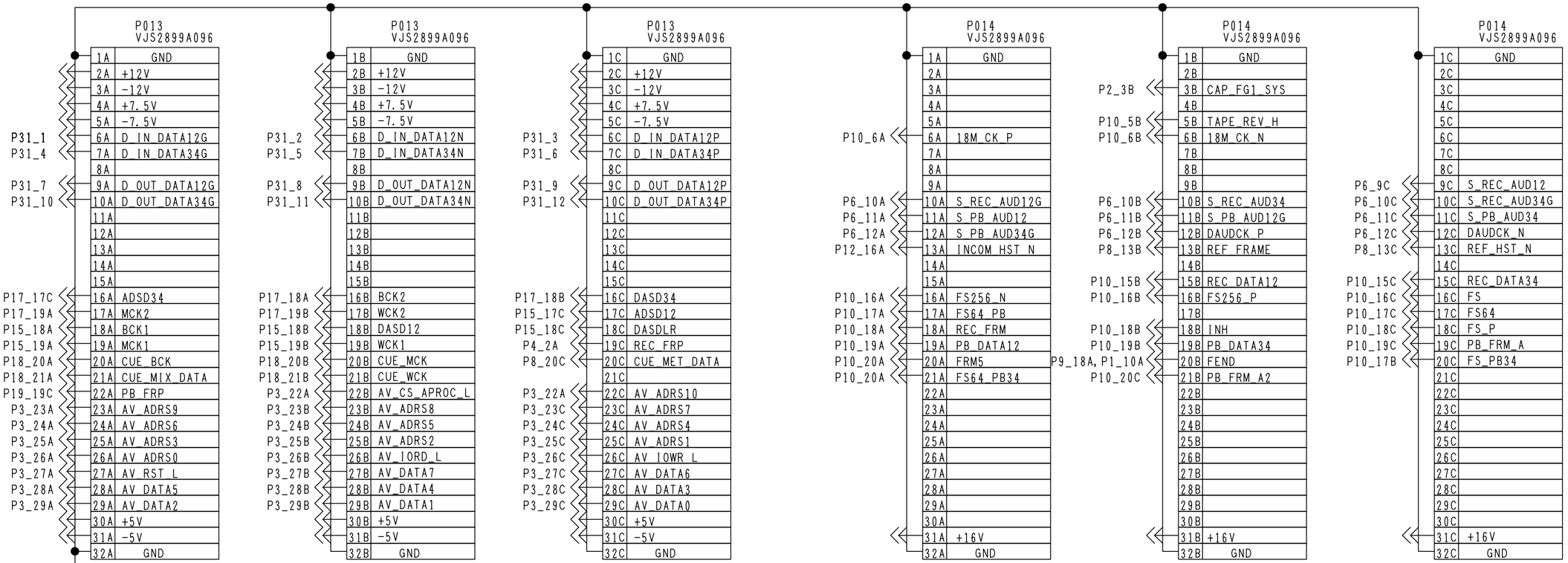

COMPONENT NAME	MOTHER 07/11
CIRCUIT BOARD NO.	MODEL NO.
VEP80A48A	
	SCM203

ADDA_1 (F8)

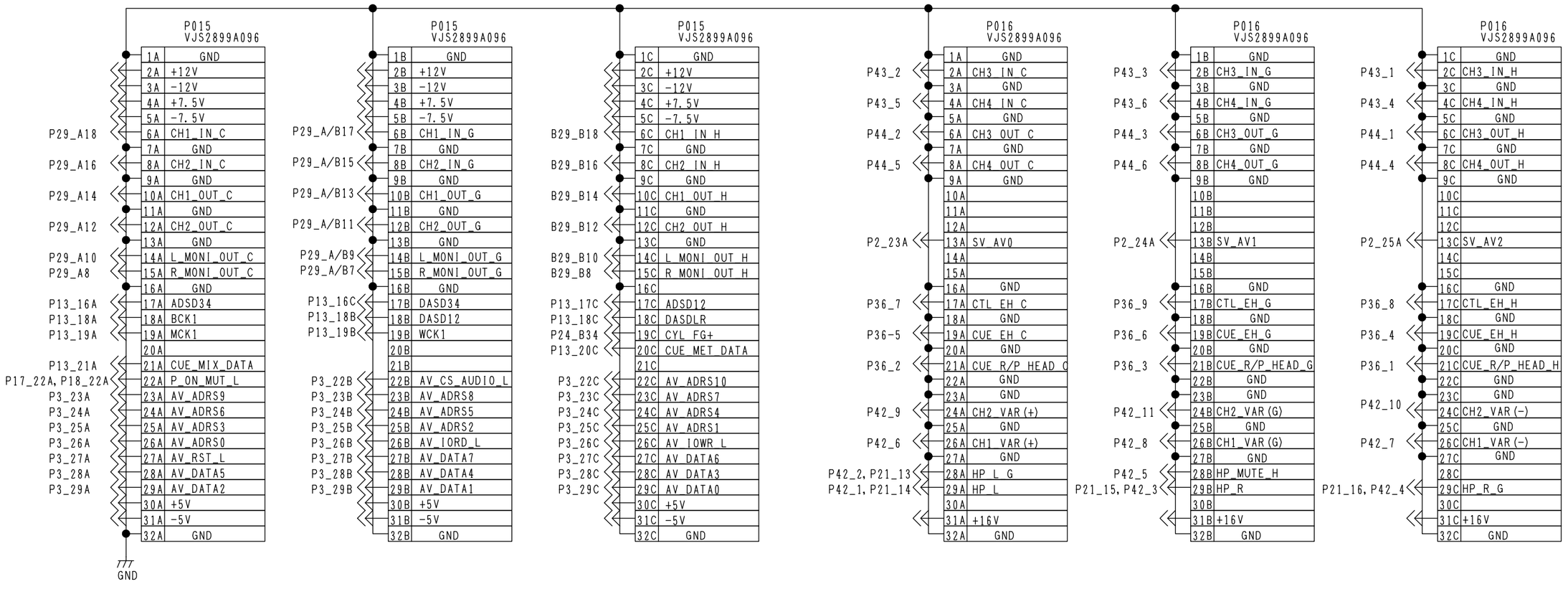

COMPONENT NAME	MOTHER	08/11
CIRCUIT BOARD NO.	MODEL NO.	
VEP80A48A		
	SCM204	

ADDA_2 (H1)

P017
VJS2899A096

1A	GND	
2A	+12V	
3A	−12V	
4A	+7.5V	
5A	−7.5V	
6A		
7A	GND	
8A		
9A	GND	
10A		
11A	GND	
12A		
13A	GND	
14A		
15A		
16A		
17A		
18A	BCK2	P13_16B
19A	MCK2	P13_17A
20A		
21A		
22A	P_ON_MUT_L	P18_22A, P15_22A
23A	AV_ADRS9	P3_23A
24A	AV_ADRS6	P3_24A
25A	AV_ADRS3	P3_25A
26A	AV_ADRS0	P3_26A
27A	AV_RST_L	P3_27A
28A	AV_DATA5	P3_28A
29A	AV_DATA2	P3_29A
30A	+5V	
31A	−5V	
32A	GND	

GND

P017
VJS2899A096

1B	GND	
2B	+12V	
3B	−12V	
4B	+7.5V	
5B	−7.5V	
6B		
7B	GND	
8B		
9B	GND	
10B		
11B	GND	
12B		
13B	GND	
14B		
15B		
16B		
17B		
18B	DASD34	P13_16C
19B	WCK2	P13_17B
20B		
21B		
22B	AV_CS_AUDIO_L	P3_22B
23B	AV_ADRS8	P3_23B
24B	AV_ADRS5	P3_24B
25B	AV_ADRS2	P3_25B
26B	AV_IORD_L	P3_26B
27B	AV_DATA7	P3_27B
28B	AV_DATA4	P3_28B
29B	AV_DATA1	P3_29B
30B	+5V	
31B	−5V	
32B	GND	

P017
VJS2899A096

1C	GND	
2C	+12V	
3C	−12V	
4C	+7.5V	
5C	−7.5V	
6C		
7C	GND	
8C		
9C	GND	
10C		
11C	GND	
12C		
13C	GND	
14C		
15C		
16C		
17C	ADSD34	P13_16A
18C		
19C		
20C		
21C		
22C	AV_ADRS10	P3_22C
23C	AV_ADRS7	P3_23C
24C	AV_ADRS4	P3_24C
25C	AV_ADRS1	P3_25C
26C	AV_IOWR_L	P3_26C
27C	AV_DATA6	P3_27C
28C	AV_DATA3	P3_28C
29C	AV_DATA0	P3_29C
30C	+5V	
31C	−5V	
32C	GND	

CUE (H2)

P018
VJS2899A096

1A	GND	
2A	+12V	
3A	−12V	
4A	+7.5V	
5A	−7.5V	
6A	CUE_IN_C	P29_A30
7A	GND	
8A	CUE_OUT_C	P29_A28
9A	GND	
10A		
11A		
12A		
13A		
14A		
15A		
16A		
17A		
18A		
19A		
20A	CUE_BCK	P13_20A
21A	CUE_MIX_DATA	P13_21A
22A	P_ON_MUT_L	P15/17_22A
23A	AV_ADRS9	P15/17_23A
24A	AV_ADRS6	P15/17_24A
25A	AV_ADRS3	P15/17_25A
26A	AV_ADRS0	P15/17_26A
27A	AV_RST_L	P15/17_27A
28A	AV_DATA5	P15/17_28A
29A	AV_DATA2	P15/17_29A
30A	+5V	
31A	−5V	
32A	GND	

P018
VJS2899A096

1B	GND	
2B	+12V	
3B	−12V	
4B	+7.5V	
5B	−7.5V	
6B	CUE_IN_G	P29_A/B29
7B	GND	
8B	CUE_OUT_G	P29_A/B27
9B	GND	
10B		
11B		
12B		
13B		
14B		
15B		
16B		
17B		
18B		
19B		
20B	CUE_MCK	P13_20B
21B	CUE_WCK	P13_21B
22B	AV_CS_AUDIO_L	P15/17_22B
23B	AV_ADRS8	P15/17_23B
24B	AV_ADRS5	P15/17_24B
25B	AV_ADRS2	P15/17_25B
26B	AV_IORD_L	P15/17_26B
27B	AV_DATA7	P15/17_27B
28B	AV_DATA4	P15/17_28B
29B	AV_DATA1	P15/17_29B
30B	+5V	
31B	−5V	
32B	GND	

P018
VJS2899A096

1C	GND	
2C	+12V	
3C	−12V	
4C	+7.5V	
5C	−7.5V	
6C	CUE IN H	P29_B30
7C	GND	
8C	CUE OUT H	P29_B28
9C	GND	
10C		
11C		
12C		
13C		
14C		
15C		
16C		
17C		
18C	CYL_FG+	CYL_FG+
19C		
20C	CUE_MET DATA	P13_20C
21C		
22C	AV ADRS10	P5/17_22C
23C	AV ADRS7	P5/17_23C
24C	AV ADRS4	P5/17_24C
25C	AV ADRS1	P5/17_25C
26C	AV IOWR L	P5/17_26C
27C	AV DATA6	P5/17_27C
28C	AV DATA3	P5/17_28C
29C	AV DATA0	P5/17_29C
30C	+5V	
31C	−5V	
32C	GND	

COMPONENT NAME	MOTHER	09/11
CIRCUIT BOARD NO.	MODEL NO.	
VEP80A48A		
	SCM205	

EQ (H3)

P019
VJS2899A096

1A	GND	
2A	+12V	
3A	−12V	
4A	+7.5V	
5A	−7.5V	
6A	GND	
7A	RTV_SPD_PB	P1_6B
8A	REF_CLK	P1_7B
9A	ATF_P	P1_8A
10A	GND	
11A	RECCTRL_A	P9_8B, P20_11A
12A	PB_DAT_R_N	P9_9B
13A	PB_DAT_P_P	P9_10B
14A	PB_CLK_P_N	P9_11B
15A		
16A		
17A		
18A	EQ_12MH_P	P9_11C
19A	RP_HSW	P9_16C, P20_19A, P1_17B
20A	REC_ENV	P1_16C
21A		
22A	VS_CS	P10_6C
23A	RF_CLK	P3_18A, P20_23A
24A		
25A	GND	
26A	PB_OUT_P	P20_26A
27A	GND	
28A	RP_OUT_P	P20_28A
29A	GND	
30A	+5V	
31A	−5V	
32A	GND	

GND

P019
VJS2899A096

1B	GND	
2B	+12V	
3B	−12V	
4B	+7.5V	
5B	−7.5V	
6B	GND	
7B	RTV_SPD_RP	P1_6C
8B	GND	
9B	ATF_R	P1_8B
10B	GND	
11B	RECCTRL_B	P9_8C, P20_11B
12B	PB_CLK_R_P	P9_9C
13B	PB_CLK_R_N	P9_10C
14B		
15B		
16B		
17B		
18B	EQ_12MH_N	P9_12A
19B	PB_HSW	P9_16B, P20_19B, P1_17A
20B	PB_ENV	P1_16B
21B	VS_CLK	P10_9C
22B		
23B	RF_DATA	P3_18B, P20_23B
24B		
25B	GND	
26B	PB_OUT_N	P20_26B
27B	GND	
28B	RP_OUT_N	P20_28B
29B	GND	
30B	+5V	
31B	−5V	
32B	GND	

P019
VJS2899A096

1C	GND	
2C	+12V	
3C	−12V	
4C	+7.5V	
5C	−7.5V	
6C	GND	
7C	GND	
8C	GND	
9C	GND	
10C	GND	
11C	PB_DAT_R_P	P9_9A
12C	PB_CLK_R_N	P9_10A
13C	PB_CLK_P_P	P9_11A
14C		
15C		
16C		
17C	EQ_HOLD_H	P9_15A
18C		
19C	PB_FRP	P13_22A
20C	PBH	P9_20C, P20_20C
21C	VS_DATA	P9_23B
22C		
23C	RF_EQLD_H	P3_18C, P20_23C
24C		
25C	GND	
26C	PB_OUT_G	P20_26C
27C	GND	
28C	RP_OUT_G	P20_28C
29C	GND	
30C	+5V	
31C	−5V	
32C	GND	

RF_AMP (H4)

P020
VJS2899A096

1A	GND	
2A	+12V	
3A	−12V	
4A	+7.5V	
5A	−7.5V	
6A	GND	
7A		
8A	EE_DATA_P	P9_6A
9A	EE_CLK_P	P9_6C
10A	FECTRL0	P9_7B
11A	RECCTRL_A	P9_8B
12A	A_REC	P33_A9
13A	GND	
14A	GND	
15A	GND	
16A	GND	
17A		
18A		
19A	RP_HSW	P9_16C, P19_19A, P1_17B
20A	REC_ENV	P1_16C
21A	GND	
22A	GND	
23A	RF_CLK	P3_18A, P19_23A
24A	RF_HALD_H	P3_19A
25A	PB_PRE_G	P33_A26
26A	PB_OUT_P	P19_26A
27A	RP_PRE_G	P33_A24
28A	RP_OUT_P	P19_28A
29A	GND	
30A	+5V	
31A	−5V	
32A	GND	

P020
VJS2899A096

1B	GND	
2B	+12V	
3B	−12V	
4B	+7.5V	
5B	−7.5V	
6B	GND	
7B	RE_A_CURR	P33_A7
8B	EE_DATA_N	P9_6B
9B	EE_CLK_N	P9_7A
10B	FECTRL1	P9_7C
11B	RECCTRL_B	P9_8C
12B	B_REC	P33_B9
13B	RESET	P33_A11
14B	RECDATA_P	P33_A13
15B	REC_A_CURR	P33_A17
16B	REC_A_FREQ	P33_A18
17B	RP_A	P33_A20
18B	PB_A	P33_A21
19B	PB_HSW	P9_16B, P19_19B, P1_17A
20B	PB_ENV	
21B	GND	P9_20C, P19_20C
22B	GND	
23B	RF_DATA	P3_18B, P19_23B
24B	GND	
25B	PB_PRE_P	P33_A25
26B	PB_OUT_N	P19_26B
27B	RP_PRE_P	P33_A23
28B	RP_OUT_N	
29B	GND	
30B	+5V	
31B	−5V	
32B	GND	

P020
VJS2899A096

1C	GND	
2C	+12V	
3C	−12V	
4C	+7.5V	
5C	−7.5V	
6C	GND	
7C	RE_B_CURR	P33_B7
8C	GND	
9C	GND	
10C	RECI	P9_8A
11C		
12C	RECA	P33_A10
13C	REC_TESTMOD	P33_B11
14C	RECDATA_N	P33_B13
15C	REC_B_CURR	P33_B17
16C	REC_B_FREQ	P33_B18
17C	RP_B	P33_B20
18C	PB_B	P33_B21
19C	RE_HSW	P1_17C
20C	PBH	
21C	GND	P9_20C, P19_20C
22C	GND	
23C	GND	
24C	GND	
25C	PB_PRE_N	B33_B25
26C	PB_OUT_G	P19_26C
27C	RP_PRE_N	P33_B23
28C	RP_OUT_G	P19_28C
29C	GND	
30C	+5V	
31C	−5V	
32C	GND	

HEAD_BUFFER

P033 VJP3375A060

A	NO	B	
GND	1	GND	
GND	2	GND	
+12V	3	+12V	
+7.5V	4	+7.5V	
−7.5V	5	−7.5V	
GND	6	GND	
RE_A_CURR	7	RE_B_CURR	P20_7C
FECTRL0	8	FECTRL1	P20_10B
A_REC	9	B_REC	P20_12B
RECA	10		
RESET	11	REC_TESTMOD	P20_13C
GND	12	GND	
RECDATA_P	13	RECDATA_N	P20_14C
GND	14	GND	
GND	15	GND	
GND	16	GND	
REC_A_CURR	17	REC_B_CURR	P20_15C
REC_A_FREQ	18	REC_B_FREQ	P20_16C
GND	19	GND	
RP_A	20	RP_B	P20_17C
PB_A	21	PB_B	P20_18C
GND	22	GND	
RP_PRE_P	23	RP_PRE_N	P20_27C
RP_PRE_G	24	RP_PRE_G	
PB_PRE_P	25	PB_PRE_N	P20_25C
PB_PRE_G	26	PB_PRE_G	
+5V	27	+5V	
−5V	28	−5V	
GND	29	GND	
GND	30	GND	

P20_7B
P20_10A
P20_12A
P20_12C
P20_13B
P20_14B
P20_15B
P20_16B
P20_17B
P20_18B
P20_27B
P20_27A
P20_25B
P20_25A

J7
LAND

COMPONENT NAME	MOTHER	10/11
CIRCUIT BOARD NO.	MODEL NO.	
VEP80A48A		
	SCM206	

TO V/S_JACK

P030 VJS3375B060

A	NO	B	
P3_17B	1	RTS	P3_17C
P3_16C	2	TXD	P3_17A
P3_16A	3	DTR	P3_16B
P3_15B	4		P3_7A
P3_14C	5	SERIAL_CLK	P3_15A
P3_14A	6	P_SERIAL_IN	P3_14B P3_6B
P3_13B	7	SYS_SC_CORSE_2	P3_13C P15_15B
P3_12C	8	SYS_SC_PHASE	P3_13A P15_15A
P3_12A	9	HUE	P3_12B P15_14B
P3_11B	10	SET_UP	P3_11C P15_14A
	11	GND	P15_12B
P3_10A	12	TRANSMIT_B_OUT	P3_10B P15_12A
P3_9B	13	RECEIVE_B_OUT	P3_9C P15_10B
P3_8C	14	TRANSMIT_B_IO	P3_9A P15_10A
P3_8A	15	RECEIVE_B_IO	P3_8B P15_8B
	16	GND	P15_8A
	17	-12V	P15_6B
	18	+12V	P15_6A
P7_12C	19	PR_OUT_G	P7_12A
P7_13C	20	PB_OUT_G	P7_13A P7_16C
P7_11C	21	Y_OUT_G	P7_11A
P7_10C	22	VIDEO_OUT3_G	P7_10A
P7_9C	23	VIDEO_OUT2_G	P7_9A
P7_8C	24	VIDEO_OUT1_G	P7_8A P11_12C
	25	GND	
P7_6C	26	REF_IN_G	P7_6A
P11_9C	27	PR_IN_G	P11_9A
P11_8C	28	PB_IN_G	P11_8A P18_8A
P11_7C	29	Y_IN_G	P11_7A
P11_6C	30	VIDEO_IN_G	P11_6A P18_6A

TO A_JACK

P029 VJS3375B060

A	NO	B	
+12V	1	+12V	
-12V	2	-12V	
GND	3	GND	
TC_OUT_C	4	TC_OUT_H	P3_6C
GND	5	GND	
TC_IN_C	6	TC_IN_H	P3_6A
R_MONI_OUT_G	7	R_MONI_OUT_G	P15_15C
R_MONI_OUT_C	8	R_MONI_OUT_H	
L_MONI_OUT_G	9	L_MONI_OUT_G	P15_14C
L_MONI_OUT_C	10	L_MONI_OUT_H	
CH2_OUT_G	11	CH2_OUT_G	P15_12C
CH2_OUT_C	12	CH2_OUT_H	
CH1_OUT_G	13	CH1_OUT_G	P15_10C
CH1_OUT_C	14	CH1_OUT_H	
CH2_IN_G	15	CH2_IN_G	P15_8C
CH2_IN_C	16	CH2_IN_H	
CH1_IN_G	17	CH1_IN_G	P15_6C
CH1_IN_C	18	CH1_IN_H	
4P_C_OUT_G	19	4P_C_OUT_G	P7_15A
WIDE_OUT_L	20	4P_C_OUT	P7_15C
4P_Y_OUT_G	21	4P_Y_OUT_G	P7_14A
	22	4P_Y_OUT	P7_14C
4P_C_IN_G	23	4P_C_IN_G	P11_11A
WIDE_IN_L	24	4P_C_IN	P11_11C
4P_Y_IN_G	25	4P_Y_IN_G	P11_10A
	26	4P_Y_IN	P11_10C
CUE_OUT_G	27	CUE_OUT_G	P18_8B
CUE_OUT_C	28	CUE_OUT_H	P18_8C
CUE_IN_G	29	CUE_IN_G	P18_6B
CUE_IN_C	30	CUE_IN_H	P18_6C

TO M_IF

P023 VJP2891A030

	NO		
	1	GND	P2_6C
	2	GND	P10_30B
	3	GND	P4_14B
	4	+12V	P4_17C
	5	-12V	P4_18B
	6	+5V	P4_19A
P4_27A	7	R_STAND_L2S	P4_19B
P4_28A	8	R_STAND_S2L	P4_20B
P4_20C	9	PINCH_ON	P4_21B
P4_21C	10	PINCH_OFF	P4_22B
P4_22C	11	S_BRAKE_ON	P4_23B
P4_23C	12	S_BRAKE_OFF	P4_24B
P4_24C	13	T_BRAKE_ON	P4_25A
P4_25C	14	T_BRAKE_OFF	P4_26B
P4_26C	15	M_STOPPER_OFF	P2_7A
P4_27C	16	M_STOPPER_ON	P2_7C
P2_23C	17	TRM1	P2_4C
P2_24C	18	TRM2	P2_5B
P2_23B	19	TRM3	P2_6A
P2_25C	20	SRM1	P2_9B
P2_26C	21	SRM2	P2_10A
P2_25B	22	SRM3	P2_10C
P2_27C	23	CAM1	P2_11B
P2_28C	24	CAM2	P2_12A
P2_27B	25	CAM3	P2_12C
P2_29C	26	CYL_M1	P2_13B
P2_30C	27	CYL_M2	P2_14A
P2_29B	28	CYL_M3	P2_14C
P1_18A	29	LOAD_FG	P2_15B
P2_6B	30	CLE_ON_H	P2_16A

TO M_IF

P024 VJP3418A080

A	NO	B	
CHECK_LINE_2	1	CASSET_POS_1	P10_30A
CASSET_POS_2	2	CASSET_POS_3	P10_30C
CASSET_MID_H	3	GND	
CASSET_INR_H	4	CASSET_INL_H	P4_18A
CASSET1_H	5	DEW_ON_H	P4_18C
CASSET2_H	6	DEW_GND	P4_19C
CASSET_DOWN_H	7	CASSET_UP_L	P4_20A
MECHA_POS2_L	8	MECHA_POS1_L	P4_21A
SAFETY_TAB	9	MECHA_POS3_L	P4_22A
REEL_POS2_H	10	CAST_DOWN_L	P4_23A
TAPE_SENSOR_ON	11	REEL_POS1_H	P4_24A
F_LOAD_IN	12	F_LOAD_OUT	P4_25B
TAPE_START_L	13	TAPE_END_L	P4_26A
LOADING	14	UNLOADING	P4_27B
TENSION	15	TENS_GND	P2_7B
CYLH_V+	16	CYLH_V-	P2_8A
CYLH1+	17	CYLH1-	P2_4B
CYLH2+	18	CYLH2-	P2_5A
CYLH3+	19	CYLH3-	P2_5C
TRH_V+	20	TRH_V-	P2_9C
TRH1+	21	TRH1-	P2_10B
TRH2+	22	TRH2-	P2_11A
TRH3+	23	TRH3-	P2_11C
SRH_V+	24	SRH_V-	P2_12B
SRH1+	25	SRH1-	P2_13A
SRH2+	26	SRH2-	P2_13C
SRH3+	27	SRH3-	P2_14B
CAH_V+	28	CAH_V-	P2_15A
CAH1+	29	CAH1-	P2_15C
CAH2+	30	CAH2-	P2_16B
CAH3+	31	CAH3-	P2_17A
CAP_FG_VCC	32	CAP_FG_GND	P2_17C
CAP_FG1_M	33	CAP_FG2_M	P2_18B
CYL_PG+	34	CYL_FG+	P2_19A
T_FG_V	35	T_FG_GND	P2_19C
T_FG1_M	36	T_FG2_M	P2_20B
S_FG_V	37	S_FG_GND	P2_21A
S_FG1_M	38	S_FG2_M	P2_21C
CYL_PF_GND	39	CTL_GND	P2_8C
CTL_REC_CURR	40	CTL_PRE	P2_9A

TO POWER

P027 VJP2824B008

1	-7.5V	
2	+7.5V	
3	-12V	
4	+12V	
5	GND	
6	GND	
7	GND	
8	GND	

P026 VJP2824B009

1	+3V	
2	GND	
3	GND	
4	GND	
5		
6	-5V	
7	+5V(F1-4)	
8	+5V	
9	+5V	

P025 VJP2824B003

		P3_7B
J8 LAND		
1	FAN_PULSE1	
2	GND_M	
3	+16V	

TO FAN_MOTOR

P032 VJP1230T

1	+12V	
2	FAN_PULSE2	P3_7C
3	GND	

TO FRONT (D215)

P021 VJP2891B016

J3 LAND

1	+5V	
2	+7.5V	
3	+5V	
4	+5V	
5	FR_SERI0A	P4_28B, P41_1
6	FR_SERI0B	P4_28C, P41_2
7	FR_SERI1A	P4_29B, P41_3
8	FR_SERI1B	P4_29C, P41_4
9	GND	
10	GND	
11	GND	
12	GND	
13	HP_L_G	P16_28A, P42_2
14	HP_L	P16_29A, P42_1
15	HP_R	P16_29B, P42_3
16	HP_R_G	P16_29C, P42_4

GND

TO FRONT1 (D218)

P041 VJP1930T

1	FR_SERI0A	P4_28B, P21_5
2	FR_SERI0B	P4_28C, P21_6
3	FR_SERI1A	P4_29B, P21_7
4	FR_SERI1B	P4_29C, P21_8
5	+5V	
6	+5V	
7	+5V	
8	+5V	
9	GND	
10	GND	
11	GND	
12	GND	
13	GND	
14	-12V	
15	+12V	

TO FRONT2 (D218)

P042 VJP1251T

1	HP_L	P16_29A, P21_14
2	HP_L_G	P16_28A, P21_13
3	HP_R	P16_29B, P21_15
4	HP_R_G	P16_29C, P21_16
5	HP_MUTE_H	P16_28B
6	CH1_VAR(+)	P16_26A
7	CH1_VAR(-)	P16_26C
8	CH1_VAR(G)	P16_26B
9	CH2_VAR(+)	P16_24A
10	CH2_VAR(-)	P16_24C
11	CH2_VAR(G)	P16_24B

TO UP_FRONT (D215)

P022 VJP1248T

J4 LAND

J5 LAND

1	U_FRONT_DATA	P4_29A
2	SERIAL_CLK	P3_15A
3	STB_CLK16	P3_15B
4	A_IN_SEL_SW_L	P4_30A
5	V_IN_SEL_SW_L	P4_30B
6	EJECT_SW_L	P4_30C
7	+5V	
8	GND	

P043 VJP1233T

P16_2C	1	CH3_IN_H
P16_2A	2	CH3_IN_C
P16_2B	3	CH3_IN_G
P16_4C	4	CH4_IN_H
P16_4A	5	CH4_IN_C
P16_4B	6	CH4_IN_G

P044 VJP1233T

P16_6C	1	CH3_OUT_H
P16_6A	2	CH3_OUT_C
P16_6B	3	CH3_OUT_G
P16_8C	4	CH4_OUT_H
P16_8A	5	CH4_OUT_C
P16_8B	6	CH4_OUT_G

TO AES/EBU

P031 VJP1239T

P13_6A	1	D_IN_DATA12G
P13_6B	2	D_IN_DATA12N
P13_6C	3	D_IN_DATA12P
P13_7A	4	D_IN_DATA34G
P13_7B	5	D_IN_DATA34N
P13_7C	6	D_IN_DATA34P
P13_9A	7	D_OUT_DATA12G
P13_9B	8	D_OUT_DATA12N
P13_9C	9	D_OUT_DATA12P
P13_10A	10	D_OUT_DATA34G
P13_10B	11	D_OUT_DATA34N
P13_10C	12	D_OUT_DATA34P

P036 VJP1250T

P16_21C	1	CUE_R/P_HEAD_H
P16_21A	2	CUE_R/P_HEAD_C
P16_21B	3	CUE_R/P_HEAD_G
P16_19C	4	CUE_EH_H
P16_19A	5	CUE_EH_C
P16_19B	6	CUE_EH_G
P16_17A	7	CTL_EH_C
P16_17C	8	CTL_EH_H
P16_17B	9	CTL_EH_G
	10	

COMPONENT NAME	MOTHER	11/11
CIRCUIT BOARD NO.	MODEL NO.	
VEP80A48A		
	SCM207	

OVERALL BLOCK DIAGRAM

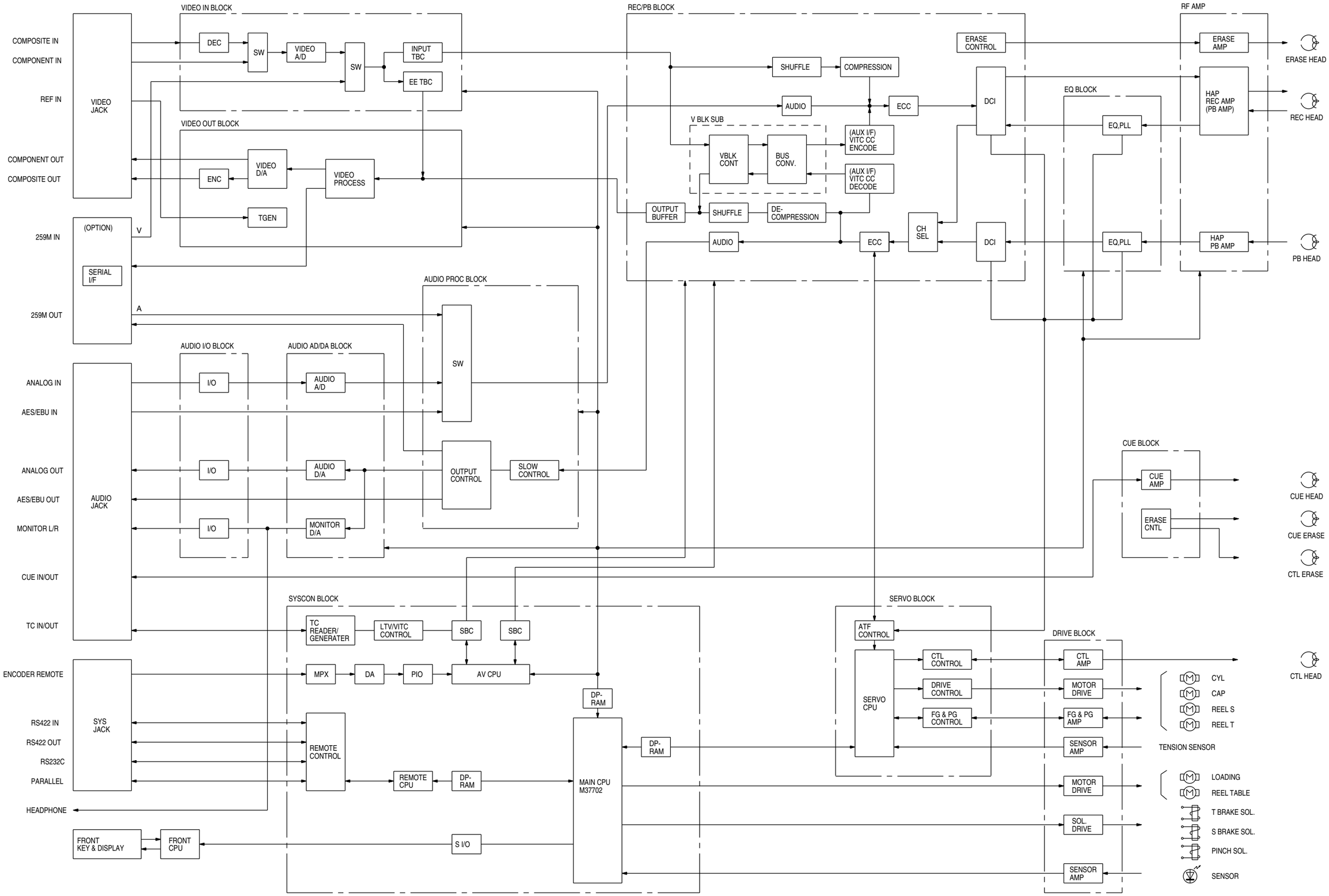

CONTENTS

Mechanical Replacement Parts Rist & Exploded Views PRT-1

Mechanical Chassis Assembly(1) PRT-1

Mechanical Chassis Assembly(2) PRT-3

Sub Chassis Assembly PRT-5

Front Panel Assembly PRT-7

Rear Panel Assembly PRT-9

Casing Parts Assembly PRT-11

Chassis Frame Assembly PRT-13

Cassette Compartment Assembly PRT-15

Packing Parts Assembly PRT-17

Electrical Replacement Parts List PRT-18

SERVICING FIXTURES & TOOLS

AJ-D850P

Ref. No.	Part No.	Part Name & Description	Pcs	Remarks
1	VFK1145	BACK TENSION METER	1	
2	VFK1149	POST DRIVER	1	
3	VFK71	DIAL TORQUE GAUGE (150G)	1	
4	VFK1191	DIAL TORQUE GAUGE (45G)	1	
5	VFK1152	DIAL TORQUE GAUGE ADAPTOR	1	
6	VFK0357	ECCENTORIC SCREWDRIVER	1	
7	VFL1154	POST HEIGHT FIXTURE	1	
8	VFK1153	MECH. NEUTRAL PLATE	1	
9	VFK0906	OIL	1	
10	VFK1155	REV POSITION TOOL	1	
11	VFK1156	PLAY POSITION TOOL	1	
12	VFK1208	NEUTRAL POSITION TOOL	1	
13	VFK1150	NUT DRIVER (5.5MM)	1	
14	VFK1151	NUT DRIVER (2.5MM)	1	
15	VFK1188	DIAL TENSION GAUGE (30G)	1	
16	VFK0948A	CHECK LIGHT	1	
17	VFK0749	FROIRAL GREASE	1	
18	MOR265	MORLYTONE GREASE	1	
19	VFK1146	PHILIPS DRIVER (FINE)	1	
20	VFK1147	PHILIPS DRIVER (FINE)	1	
21	VFK1148	HEX. DRIVER (1.5)	1	
22	VFK1178	HEX. DRIVER (0.89)	1	
23	VFK1179	HEX. DRIVER (0.71)	1	
24	VFK1190	HEX. WRENCH	1	
25	VFK1209	TORQUE DRIVER	1	
26	VFK1375	POST AXIS DRIVER (1.5MM)	1	
27	VFK1300	A/D BOARD	1	
28	VFM3580KM	ALIGNMENT TAPE (NO.1)	1	FOR NTSC
29	VFM3581KM	ALIGNMENT TAPE (NO.2)	1	FOR NTSC
30	VFM3582KM	ALIGNMENT TAPE (NO.3)	1	FOR NTSC
31	VFM3680KM	ALIGNMENT TAPE (NO.1)	1	FOR PAL
32	VFM3681KM	ALIGNMENT TAPE (NO.2)	1	FOR PAL
33	VFM3682KM	ALIGNMENT TAPE (NO.3)	1	FOR PAL
34	VFM3000EDS	ALIGNMENT TAPE (DV LISTA)	1	
35	VFM3010EDS	ALIGNMENT TAPE	1	
36	VFM3110EDS	ALIGNMENT TAPE	1	
37	AJ-CL12MP	CLEANING TAPE	1	
38	VFK1481	LISTA SOFTWARE	1	
39	VFK1186	LISTA CABLE	1	
40	VFK1423	TAPE DET. SENSOR CASSETTE	1	
41	VZZ0085	CLEANING CROSS	1	

Ref. No.	Part No.	Part Name & Description	Pcs	Remarks
42	VFK1248A	FLASH ROM VERSION UP SOFT	1	
43	VFK1304A	ROM REWRITER	1	
44	VFK1305	120P EXTENDER	1	
45	VFK1307	70P EXTENDER	1	
46	VFK1306	52P EXTENDER	1	
47	VFK0369	TWEEZERS	1	
48	VFK0371	RADIO PRIER	1	
49	VFK0372	CUTTER PRIER	1	
50	VFK0338	TRIMMER ADJUSTMENT DRIVER	1	
51	VFK0337	PHILIPS DRIVER	1	

Ref.No.	Part No.	Part Name & Description	Pcs	Remarks
▪ 1	VEM0686	S REEL MOTOR A ASS'Y	1	(M)
▪ 2	VEM0687	T REEL MOTOR A ASS'Y	1	(M)
3	VMS5923	REEL OUTER RAIL	2	
4	VMS5924	REEL INNER RAIL	2	
5	VXL2589	S BASE DRIVE ARM ASS'Y	1	
6	VMB2944	CHARGE SPRING	2	
7	VXL2590	T BASE DRIVE ARM ASS'Y	1	
8	VXA5625	SLIDE ROD ASS'Y	1	
9	VXL2597	M STOPPER DRIVE ARM ASS'Y	1	
9-1	VMB2955	M STOPPER SPRING (1)	1	
9-2	VMB3017	M STOPPER SPRING (2)	1	
10	VXA6174	L-M RELEASE ANGLE ASS'Y	1	
11	VXZ0439	S BRAKE ARM ASS'Y	1	
12	VXZ0440	T BRAKE ARM ASS'Y	1	
13	VMZ2603	REEL FLEX COVER	2	
31	VMX1061	WASHER	7	
32	VMX1079	CUT WASHER	2	
33	VMX1394	CUT WASHER	2	
34	XQN2+CF3	SCREW	4	

Ref.No.	Part No.	Part Name & Description	Pcs	Remarks

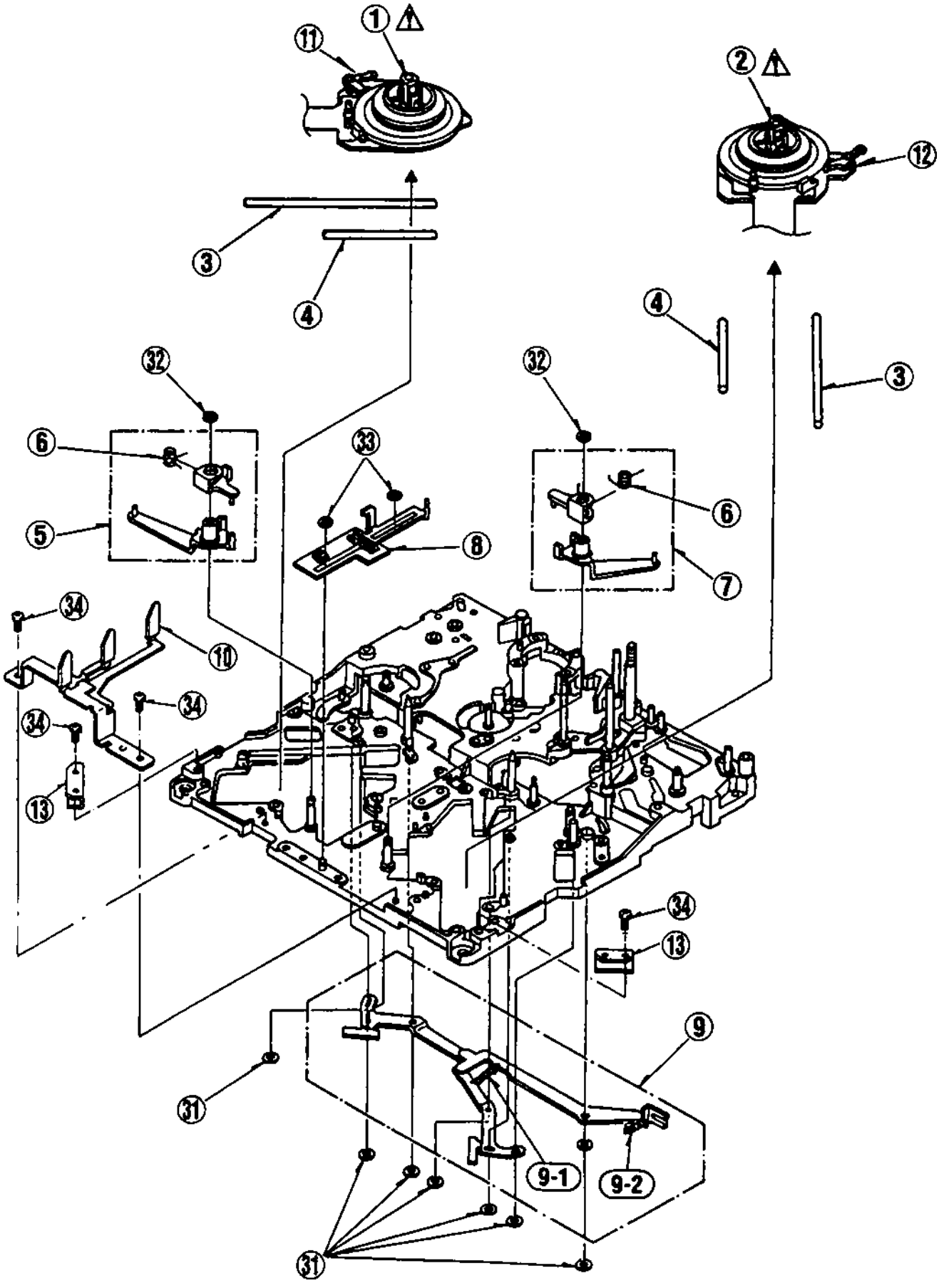
1
11
2
12
3
4
4
3
32
32
6
33
6
5
8
7
34
10
34
34
13
34
13
9
31
9-1
9-2
31

Ref.No.	Part No.	Part Name & Description	Pcs	Remarks
1	VXA5554	A/C HEAD BASE (1) ASS'Y	1	
2	VED0419	A/C HEAD	1	(M)
3	VXA6067	A/C HEAD BASE (2) ASS'Y	1	
4	VMB2935	A/C HEAD HIGHT SPRING	1	
5	VEG1498	CYLINDER UNIT	1	(M)
6	VXA5715	EMARGENCY SHIFT HOLDER	1	
▪ 7	VEM0645	LOADING MOTOR (1)A ASS'Y	1	(M)
8	VSJ0227	PINCH SOLENOID	1	(M)
9	VXA5584	MOTOR ANGLE ASS'Y	1	
10	VES0814	MODE SW ASS'Y	1	(M)
11	VMA9376	PINCH SOLENOID BASE	1	
12	VXL2748	CLEANING ARM A ASS'Y	1	(M)
12-1	VMX2150	CLEANER ROLLER HOLDER	1	
12-2	VXP1808	CLEANER ROLLER ASS'Y	1	
12-3	VMB3114	CLEANER ROLLER SPRING	1	
13	VXL2870	T2 ARM ASS'Y	1	
13-1	VMB3304	T2 ARM SPRING	1	
14	VXL2831	TENSION ARM A ASS'Y	1	(M)
14-1	VXP1761	TENSION ROLLER	1	
14-2	VMB3220	TENSION LEG SPRING	1	
14-3	VXA6173	MAGNET HOLDER ASS'Y	1	
15	VXA5791	TENSION LEG SPRING HOOK	1	
16	VXL2709	S1 LOADING ARM ASS'Y	1	(M)
17	VMD2533	LOADING RAIL	1	
18	VXA6378	T1 BOAT ASS'Y	1	(M)
19	VHD0561	HEX SCREW	1	
20	VXA6052	S POST BASE AU.	1	(M)
21	VXP1683	T4 CONNECTION GEAR ASS'Y	1	
22	VXL2772	T4 ARM ASS'Y	1	
23	VMB2950	T4 THRUST SPRING	1	
24	VXL2898	T LOADING ARM N ASS'Y	1	
25	VMS5906	T3 UPPER FRANGE	1	
26	VMS5905	T3 SLEEVE	1	
27	VMS5904	T3 LOWER FRANGE	1	
28	VMB2929	T3 SPRING	1	
29	VMB2933	PINCH RELEASE SPRING	1	
30	VEK7927	INSULLATION SENSOR	1	
31	VEK7691	LED HOLDER P.C.BOARD	1	
32	VMA9411	PINCH SOLENOID ANGLE	1	
33	VXA5820	TENSION SENSOR ASS'Y	1	
34	VXL2835	PINCH ARM ASS'Y	1	(M)
35	VXL2588	PINCH GUIDE ARM ASS'Y	1	
36	VXA5570	T SECTOR GEAR ASS'Y	1	
37	VXL2838	TENSION LEG. GUIDE ARM	1	
38	VXA5567	S SECTOR GEAR ASS'Y	1	
39	VXA5564	T4 SECTOR GEAR ASS'Y	1	
40	VXA5563	MAIN ROD ASS'Y	1	
41	VXA5627	THRUST SHAFT HOLDER ASS'Y	1	
42	VDG1166	MOTOR WARM GEAR	1	
43	VDG1268	MOTOR EMARGENCY GEAR A(A)	1	
44	VDG1267	MOTOR EMARGENCY GEAR B(A)	1	
45	VXL2889	MAIN CAM ARM ASS'Y	1	
46	VDG1168	MAIN CAM GEAR	1	(M)
47	VMB2937	A/C HEAD ADJUST SPRING	1	
48	VXL2600	EJECT ARM ASS'Y	1	
49	VMD3475	T1 GUIDE ASS'Y	1	
50	VMB2934	SPRING	1	
51	VMB3051	CLEANER RETURN SPRING	1	
52	VXA6077	CLEANER BASE 1 ASS'Y	1	
53	VXA6078	CLEANER SOLENOID ASS'Y	1	
53-1	VSJ0226	CLEANER SOLENOID	1	(M)
53-2	VMA9877	CLEANER SOLENOID BASE	1	
54	VMM0429	CLEANER INTERLOCK	1	
55	VXQ0556	THRUST SCREW ASS'Y	1	(M)
56	VMT0871	SILENCER A	1	
57	VMT0872	SILENCER B	1	
61	VHD0356	SCREW	1	
62	XQN2+A3	SCREW	1	
64	XQN2+A35FZ	SCREW	3	
65	XQN2+AM2	SCREW	3	
66	XQN2+AM4	SCREW	1	

Ref.No.	Part No.	Part Name & Description	Pcs	Remarks
67	XQN2+CF3	SCREW	12	
68	XQN2+CF4	SCREW	3	
69	XUC12FP	E-RING	2	
70	XVE2B4FZ	HEX SCREW	3	
71	XVE2B6FP	HEX SCREW	1	
72	XVE2B12FP	HEX SCREW	1	
73	VXQ0439	SCREW	3	
74	VMX0967	CUT WASHER	3	
75	VMX1061	WASHER	3	
76	VMX1079	CUT WASHER	1	
77	XWA2B	WASHER	4	
78	XWE2	WASHER	2	
79	XWE16VW	WASHER	1	
80	XXE2A6FP	HEX SCREW	1	
81	XWG2	WASHER	3	
82	XWGV15Z32G	WASHER	2	
83	VHD0045	NYLON NUT	1	
84	VHN0312	NUT	2	
85	XQN2+AQ3.5FZ	SCREW	1	
86	XQN2+AJ5	SCREW	1	
87	XQN2+A1.5	SCREW	4	
88	XQN2+A4	SCREW	1	
89	VMX1394	CUT WASHER	1	
*	VXY1431Z1	MECHANISM	1	(M)

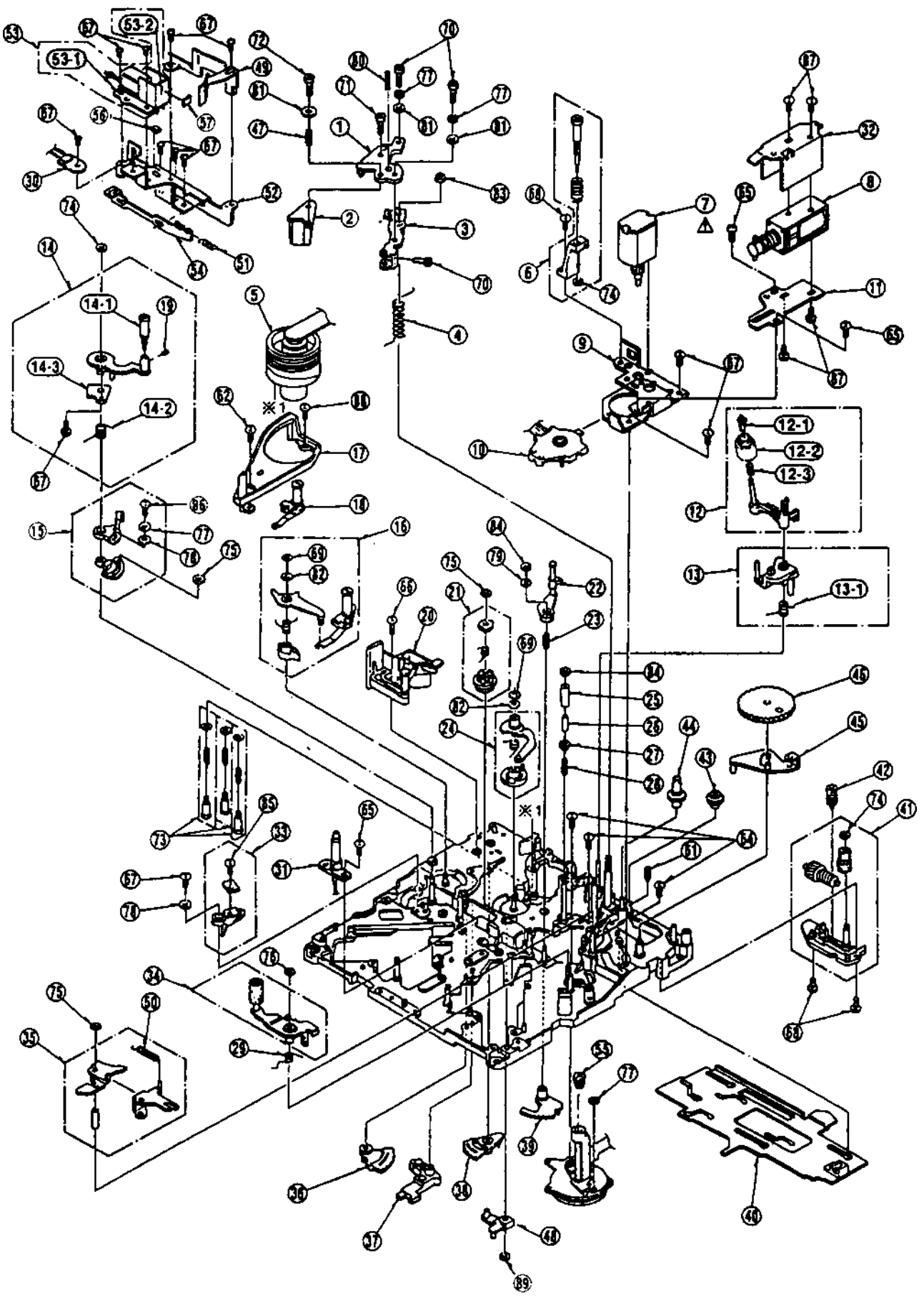

Ref.No.	Part No.	Part Name & Description	Pcs	Remarks
1	VXL2656	MIC DRIVE ARM (A) ASS'Y	1	
2	VMB3018	MIC DRIVE SPRING	1	
3	VXL2657	MIC DRIVE ARM (B) ASS'Y	1	
4	VDB1429	MIC DRIVE ARM BOSS	1	
5	VXL2613	REEL DRIVE ARM ASS'Y	1	
6	VDG1192	REEL DRIVE CAM GEAR	1	
7	VDG1193	REEL DRIVE WORM WHEEL	1	
8	VEM0585	REEL DRIVE MOTOR ASS'Y	1	(M)
9	VDG1211	MIC GENEVA GEAR	1	
10	VXP1698	REEL DRIVE WORM ASS'Y	1	
11	VXA5628	MOTOR BASE ASS'Y	1	
12	VMB3019	MIC DRIVE RETURN SPRING	1	
13	VEK7726	REEL SENSOR P.C.BOARD	1	
14	VSJ0216	BRAKE SOLENOID	3	(M)
15	VXA5575	S-BRAKE SOLENOID BASE	1	
17	VXA6199	DISTINCTION SW ASS'Y	1	(M)
18	VXA5579	M STOPPER SOLENOID ASS'Y	1	
19	VXA5887	T-BRAKE SOLENOID BASE ASS	1	
20	VXK1336	SUB CHASSIS	1	
21	VEK7692	SENSOR HOLDER ASS'Y	1	
22	VMS6193	T BRAKE RELEASE ARM SHAFT	1	
23	VMB2957	S BRAKE SPRING	1	
24	VMB2987	T BRAKE SPRING	1	
31	XQN2+CF3	SCREW	13	
32	XYN26+K6	SCREW	4	
33	XQN2+A1.5	SCREW	2	
34	XQN2+A2	SCREW	2	
35	VMX1079	CUT WASHER	5	
36	VMX0967	CUT WASHER	4	
37	VMX1548	CUT WASHER	2	
38	XQN2+A1.5	SCREW	4	
E27	VEP82216B	MECH I/F P.C.BOARD	1	

Ref.No.	Part No.	Part Name & Description	Pcs	Remarks

SUB CHASSIS ASSEMBLY

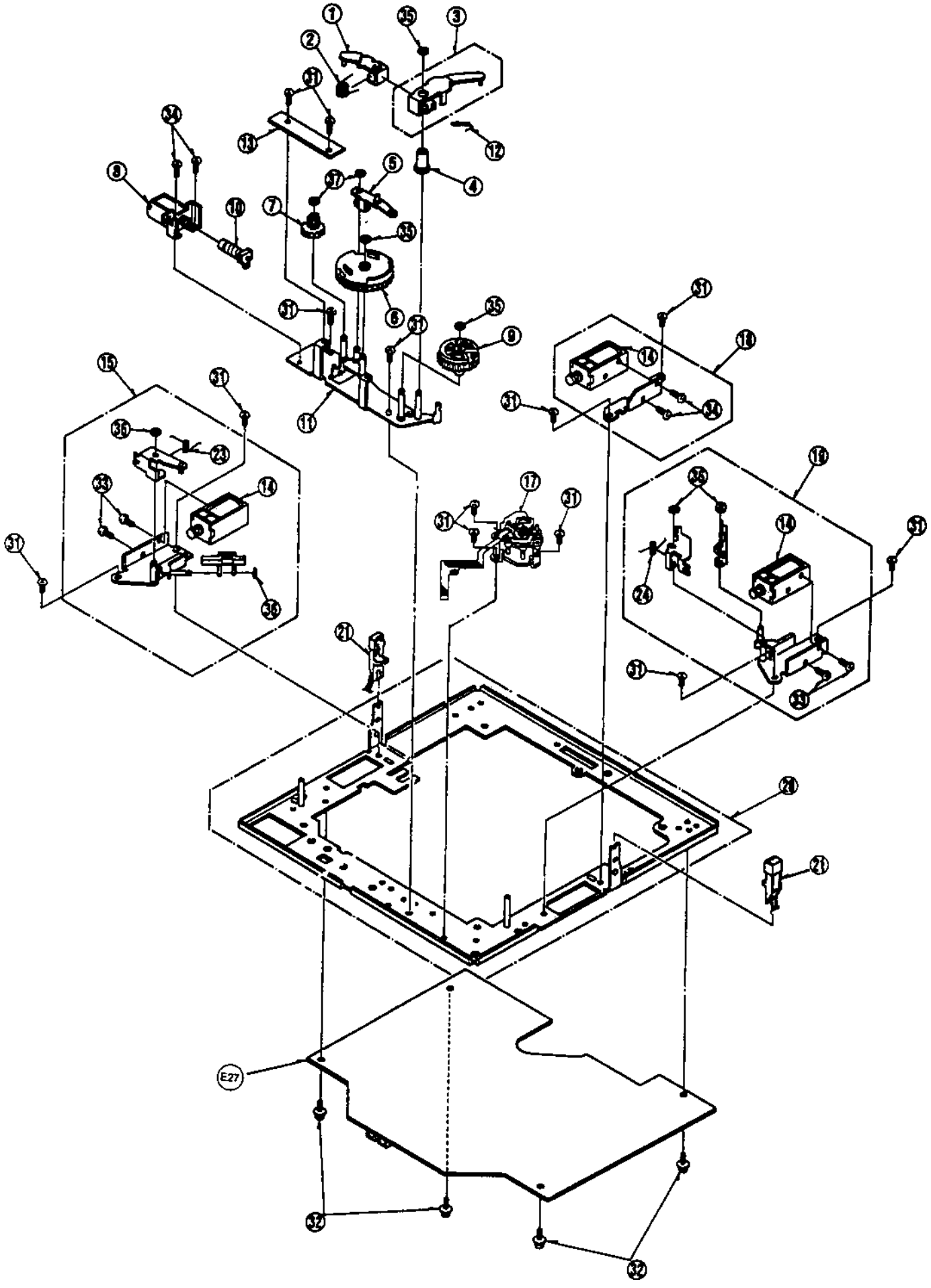

Ref.No.	Part No.	Part Name & Description	Pcs	Remarks
1	VYP6737	UPPER FRONT PANEL 1 ASS'Y	1	FOR AJ-D850P
1	VYP6737	UPPER FRONT PANEL 1 ASS'Y	1	FOR AJ-D850E
2	VMB2923	BLINDER SPRING	1	
3	VKF2785	BLINDER PANEL	1	
4	VMP4864	UPPER FRONT PANEL ANGLE	1	
5	VDK0147	CASSETTE GUIDE CAM	2	
6	VGQ4009	CASSETTE GUIDE (L)	1	
7	VMB2922	CASSETTE GUIDE SPRING	2	
8	VMB2986	CAM SPRING	2	
9	VMS5864	CASSETTE COVER	1	
10	VMS6017	GUIDE CAM SHAFT	1	
11	VGQ4010	CASSETTE GUIDE (R)	1	
12	VEE9649	UP FRONT CONNECTION CABLE 1	1	
13	VEE9650	UP FRONT CONNECTION CABLE 2	1	
14	VMZ2501	INSULATION SHEET	1	
15	VEE9640	FRONT SW CABLE	2	
16	VGU5334	LEVER VR KNOB	1	
17	VXU0768-1	VR KNOB ASS'Y	3	
18	VXU1160	REC VR KNOB ASS'Y	4	
19	VGU5780	SEARCH DIAL COVER	1	
20	VGU8126	SEARCH DIAL KNOB	1	
22	VYP6732	LOWER FRONT PANEL 1 ASS'Y	1	
23	VSP1097	SEARCH DIAL	1	
24	VMP4860	VR ANGLE	1	
25	VKU0513	BACK COVER	1	FOR AJ-D850P
25	VKU0524	BACK COVER	1	FOR AJ-D850E
26	VMB2978	LEAF SPRING	2	
27	VGM1288	SUB CONTROL SUPPORT ANGLE	1	
28	VGM1287	SUB CONTROL ANGLE	1	
29	VGM1269	SUB SW ANGLE	1	FOR AJ-D850P
29	VGM1359	SUB SW ANGLE	1	FOR AJ-D850E
30	VGU7179	SLIDE SW KNOB	10	
32	VWJ28C2120L0	FR CPU SUB FFC	1	
33	VMS6012	SHAFT	1	
34	VKF2497	SUB SW DOOR	1	
35	VMC1241	EARTH PLATE	1	
36	VMP5091	EARTH PLATE SUB	1	
37	VMP4863	CASSETTE GUIDE ANGLE	1	
38	VMC1277	HEAD PHONE EARTH SPRING	1	
39	VMZ2671	SPACER	1	
40	VGU5287	SLIDE KNOB	5	
41	VGF0659	SLIDE KNOB SHEET	5	
42	VMC1319	FRAME EARTH PLATE	1	FOR AJ-D850E
43	VMP5259	FIXING PLATE	1	FOR AJ-D850E
45	VSC4594	PANEL EARTH SHEET	1	FOR AJ-D850E
46	VMP5262	INSTALLTION PANEL A	1	FOR AJ-D850E
47	VMC1317	INSTALLTION PANEL A	1	FOR AJ-D850E
48	VMP5260	FRONT SW CABLE ANGLE	1	FOR AJ-D850E
71	XSB3+6FZ	SCREW	2	
72	XSB3+8FZ	SCREW	3	
73	XSN2+8	SCREW	1	
74	XSS26+6FZ	SCREW	2	
75	XTN4+10G	SCREW	13	
76	XTV3+8G	SCREW	16	
77	XQN14+C4	SCREW	5	
78	XTV3+8F	SCREW	2	
79	XSN2+3	SCREW	2	
80	XSN26+3	SCREW	1	
81	VMX2562	WASHER	8	
82	XUC2FP	E-RING	2	
83	XUC25FP	E-RING	2	
84	XSB3+4	SCREW	1	FOR AJ-D850E
85	XSB26+5	SCREW	1	FOR AJ-D850E
86	XTV3+6F	SCREW	2	
E20	VEP80A76A	UP FRONT 1 P.C.BOARD	1	
E21	VEP80852A	UP FRONT 2 P.C.BOARD	1	
E22	VEP86263B	UP FRONT 2 P.C.BOARD	1	
E23	VEP86148A	FRONT CPU SUB P.C.BOARD	1	

Ref.No.	Part No.	Part Name & Description	Pcs	Remarks
E24	VEP80A49B	FRONT SW P.C.BOARD	1	
E25	VEP80963C	FRONT VR 1 P.C.BOARD	1	
E26	VEP80964C	FRONT VR 2 P.C.BOARD	1	

FRONT PANEL ASSEMBLY

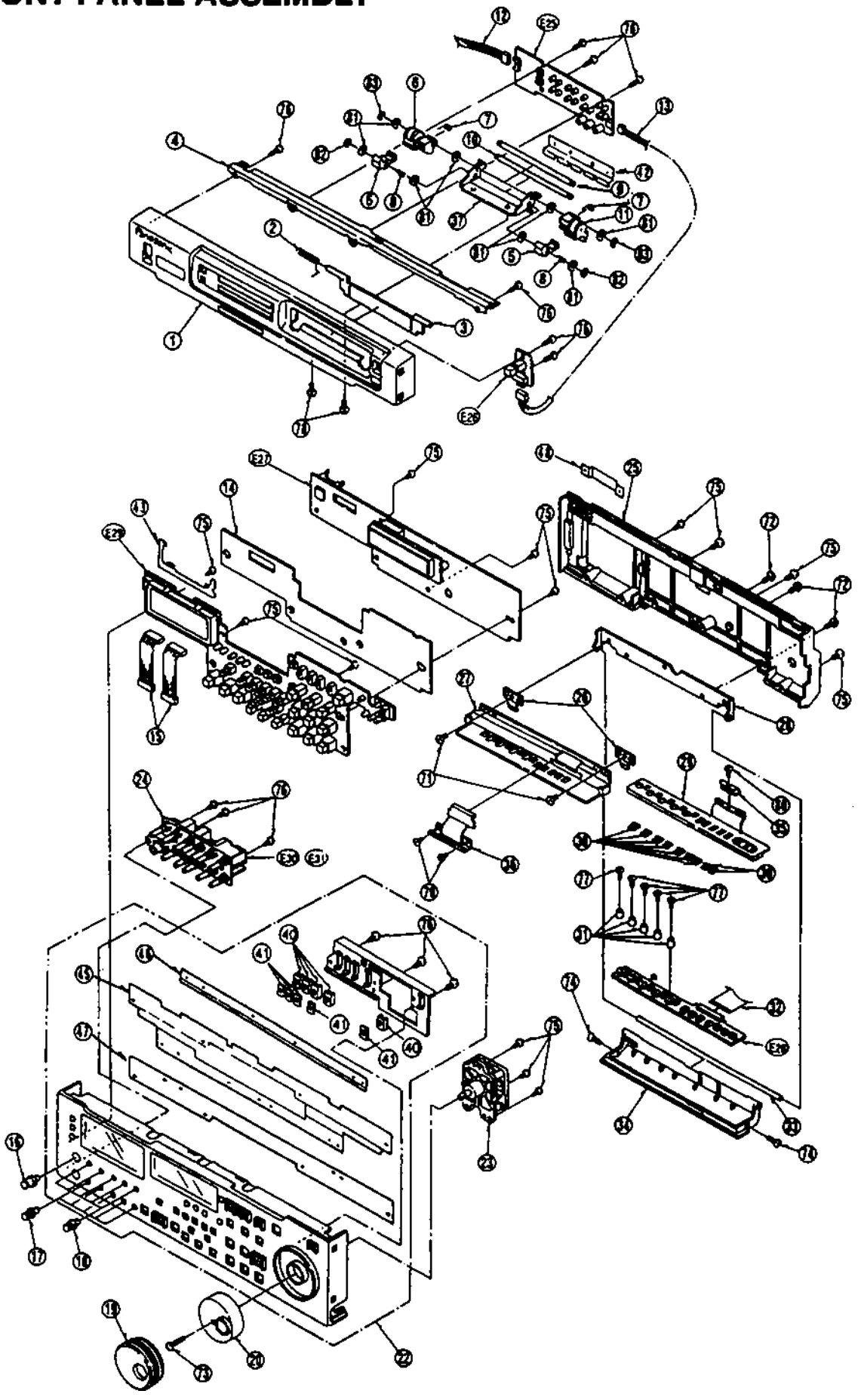

Ref.No.	Part No.	Part Name & Description	Pcs	Remarks
1	VRF0190	FAN MOTOR	1	
2	VHN0063	NYLON NUT	2	
3	VMX0835	SPACER	2	
▪ 4	VJH0939	JACK PANEL	1	FOR AJ-D850P
4	VJH1079	JACK PANEL	1	FOR AJ-D850E
5	VML2903	AC CORD HOOK	1	
7	VSC4387	POWER SUPPLY CASE A	1	
8	VRF0190	FAN MOTOR	1	
9	VMZ2502	SHIELD SHEET A	1	
10	VMZ2503	SHIELD SHEET B	1	
11	VSC4388	POWER SUPPLY CASE B	1	
▪ 12	VMZ1252	AC INLET COVER	1	
▪ 13	VJP0083	AC INLET	1	
14	VMP4889	AC INLET BRACKET	1	
15	XBA1C50NB5	FUSE	1	FOR AJ-D850P
▪ 15	XBA2C40TH15	FUSE	1	FOR AJ-D850E
▪ 16	VJF1005	FUSE HOLDER	1	
17	VJF0285	WIRE LOCKING SADDLE	4	
23	VMP5032	OPTION PANEL	1	
24	VEE9648	AES/EBU CABLE	1	
25	VMT0884	GASKET (O)	1	FOR AJ-D850E
▪ 26	VEK8447	POWER SUPPLY ASS'Y	1	FOR AJ-D850P
▪ 26	VEK8448	POWER SUPPLY ASS'Y	1	FOR AJ-D850E
71	VHD0426	SCREW	1	
72	XSN26+6FZ	SCREW	22	
73	XSN4+35FC	SCREW	2	
74	XTN26+6FFZ	SCREW	1	
75	XTV3+6F	SCREW	5	
76	XTV3+6FFZ	SCREW	2	
77	XTV3+6FFR	SCREW	7	
78	XSB3+6FZ	SCREW	2	
79	XTW3+8LR	SCREW	10	
80	XYE4+EF8	SCREW	1	
81	XYNV4+K35FCS	SCREW	2	
E14	VEP83224A	V/S JACK P.C.BOARD	1	
E15	VEP81183A	POWER 1 P.C.BOARD	1	
E16	VEP81184B	POWER 2 P.C.BOARD	1	
E18	VEP84183A	A JACK P.C.BOARD	1	
E19	VEP84187A	AES/EBU P.C.BOARD	1	

Ref.No.	Part No.	Part Name & Description	Pcs	Remarks

REAR PANEL ASSEMBLY

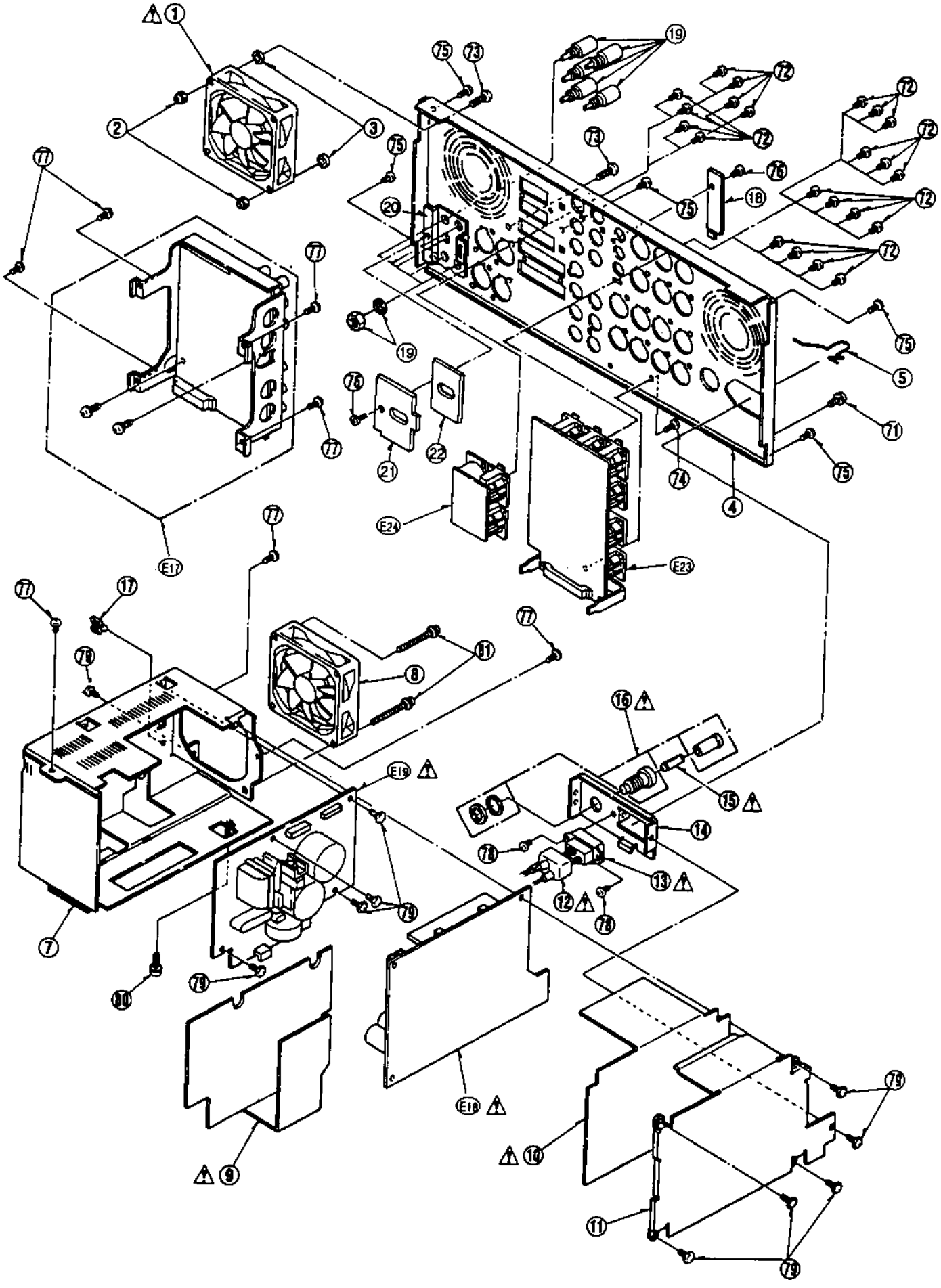

Ref.No.	Part No.	Part Name & Description	Pcs	Remarks
1	VYP6496	TOP PANEL	1	
2	VMP4884	P.C.BOARD PLATE L	1	
3	VMX2511	P.C.BOARD RUBBER CUSHION L	2	
4	VMP4885	P.C.BOARD PLATE S	1	
5	VMX2512	P.C.BOARD RUBBER CUSHION S	1	
6	VMX2510	SPACER	2	
7	VMZ2325	TOP PANEL BARRIER	1	
8	VGM1567	SIDE PANEL	2	FOR AJ-D850P
8	VGM1271	SIDE PANEL	1	FOR AJ-D850E
9	VKU0514	BOTTOM PLATE	1	
10	VMX1558	NYLON WASHER	2	
11	VEE9641	FRONT CABLE	1	
12	VMX2582	WASHER	2	
13	VMP5265	CARRIAGE SUPPORT	1	
14	VMT0797	GASKET C	1	
15	VMT0509	GASKET (B)	1	FOR AJ-D850E
16	VMT0800	GASKET (C)	1	FOR AJ-D850E
17	VMT0776	GASKET (F)	1	FOR AJ-D850E
18	VMT0797	GASKET C	3	
19	VMT0785	DUST PROOF CUSHION (B)	1	
20	VMT0786	DUST PROOF CUSHION (C)	1	
21	VMT0890	DUST PROOF CUSHION (C)	1	
75	XYN3+K8	SCREW	2	
74	XTV3+6F	SCREW	3	
73	XSB4+8FC	SCREW	8	
72	XSB3+8FZ	SCREW	8	
71	VHD0274	SCREW	2	

Ref.No.	Part No.	Part Name & Description	Pcs	Remarks

CASING PARTS ASSEMBLY

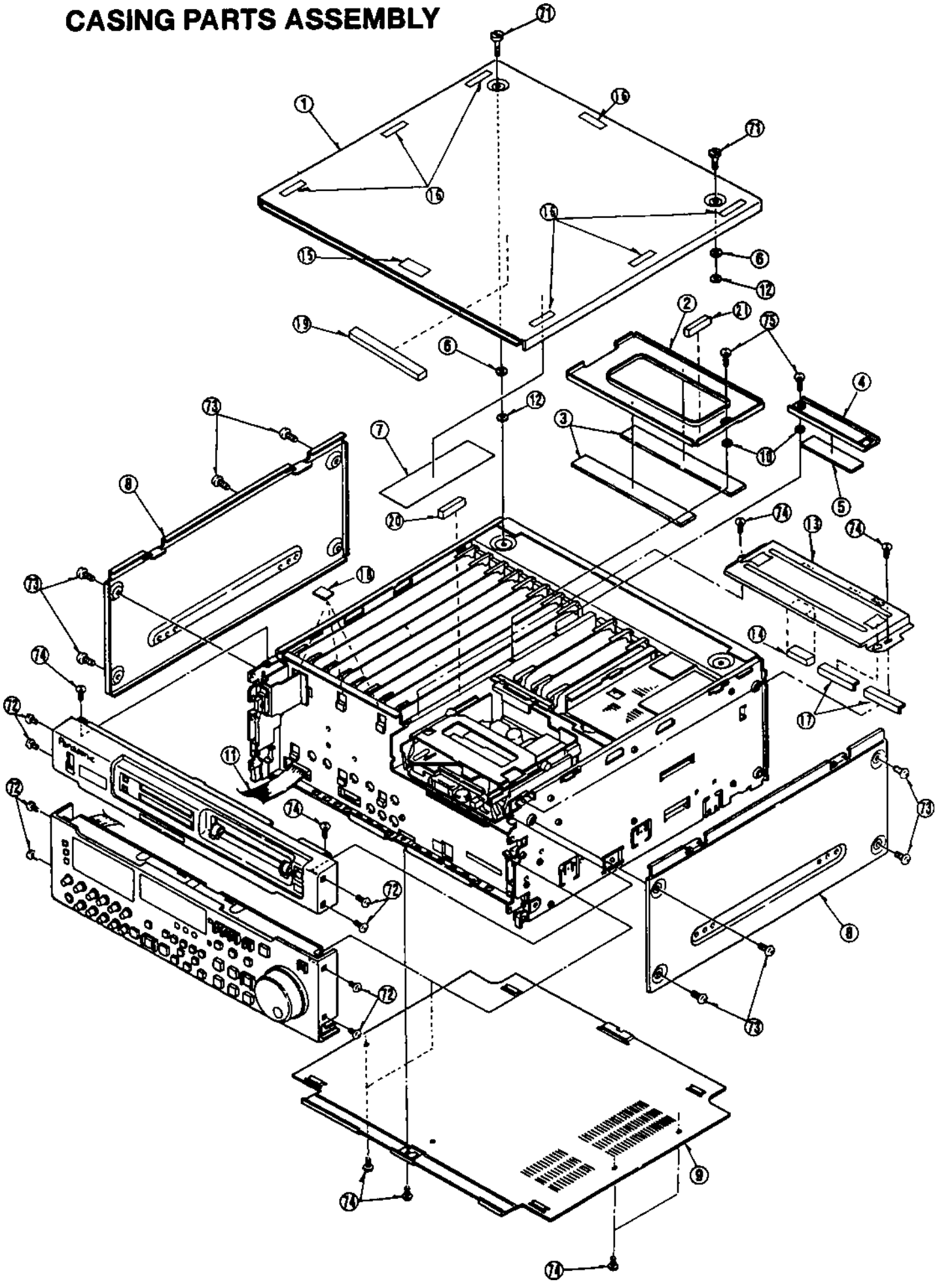

Ref.No.	Part No.	Part Name & Description	Pcs	Remarks
1	VMP4871	LEFT SIDE FRAME	1	
2	VGQ4011	P.C.BOARD GUIDE RAIL A	2	
3	VYQ1258	ROTARY BRACKET L	1	
4	VGQ4012	P.C.BOARD GUIDE RAIL B	2	
5	VMP4877	REAR FRAME	1	
6	VKA0117	PLASTIC FOOT	4	
7	VMP4878	BOTTOM FRAME	1	
8	VMP4881	SW BRACKET	1	
▪ 9	EST15372T	POWER SWITCH	1	FOR AJ-D850P
9	EST15367T	POWER SWITCH	1	FOR AJ-D850E
▪ 10	VMZ0580	SW COVER	1	
11	VJF0285	WIRE LOCKING SADDLE	4	
12	VJF1259	EDGE HOLDER	1	
13	VMP4876	FRONT FRAME	1	
14	VJF0004	WIRE SADDLE	3	
15	VMP4873	CENTER FRAME	1	
16	VXA5550	MECHANISM FRAME ASS'Y	1	
17	VGF0715	INSULATION SHEET	1	
18	VMP4874	CENTER SUB FRAME	1	
19	VGQ1543	EDGE GUARD	1	
20	VMP4875	MIDDLE FRAME	1	
21	VYQ1259	ROTARY BRACKET R	1	
22	VMP4872	SIDE FRAME R	1	
23	VJF0384	CLAMPER	2	
25	VMP5264	FPC SHIELD COVER	1	
26	VSC4384	POWER CABLE COVER	1	FOR AJ-D850E
27	VMC1318	FRAME EARTH METAL	1	FOR AJ-D850E
28	VMP5263	SHIELD COVER	1	FOR AJ-D850E
29	VMT0609	GASKET	1	FOR AJ-D850E
30	VMP5285	BOTTOM FRAME ANGLE	4	
31	VGF0714	BARRIER A	1	
32	VMT0873	GASKET (D)	10	
33	VMT0905	GASKET	2	
34	VEE0C19	POWER DC2 CABLE	1	
71	VHD5013	SCREW	2	
72	XTN3+6F	SCREW	2	
73	XTV3+6F	SCREW	27	
74	XTV3+6FFR	SCREW	9	
75	XYN3+C6	SCREW	6	
76	XYNV3+K12S	SCREW	4	
E1	VEP80A48A	MOTHER P.C.BOARD	1	
E2	VEP82220A	F1 SERVO P.C.BOARD	1	
E3	VEP86267A	F2 SYSCON P.C.BOARD	1	
E4	VEP83410C	F4 VIDEO OUT P.C.BOARD	1	
E5	VEP83394A	F5 REC PB P.C.BOARD	1	
E6	VEP83409B	F6 VIDEO IN P.C.BOARD	1	
E7	VEP84326A	F7 A PROC P.C.BOARD	1	
E8	VEP84301B	F8 A ADDA P.C.BOARD	1	
E9	VEP84302C	H2 CUE P.C.BOARD	1	
E10	VEP85048A	H3 EQ P.C.BOARD	1	
E12	VEP85151A	BUFFER AMP P.C.BOARD	1	
E13	VEP80991A	AC HEAD IF P.C.BOARD	1	

Ref.No.	Part No.	Part Name & Description	Pcs	Remarks

CHASSIS FRAME ASSEMBLY

Components identified with the mark ⚠ have the special characteristics for safety.
When replacing any of these components, use only the same type.

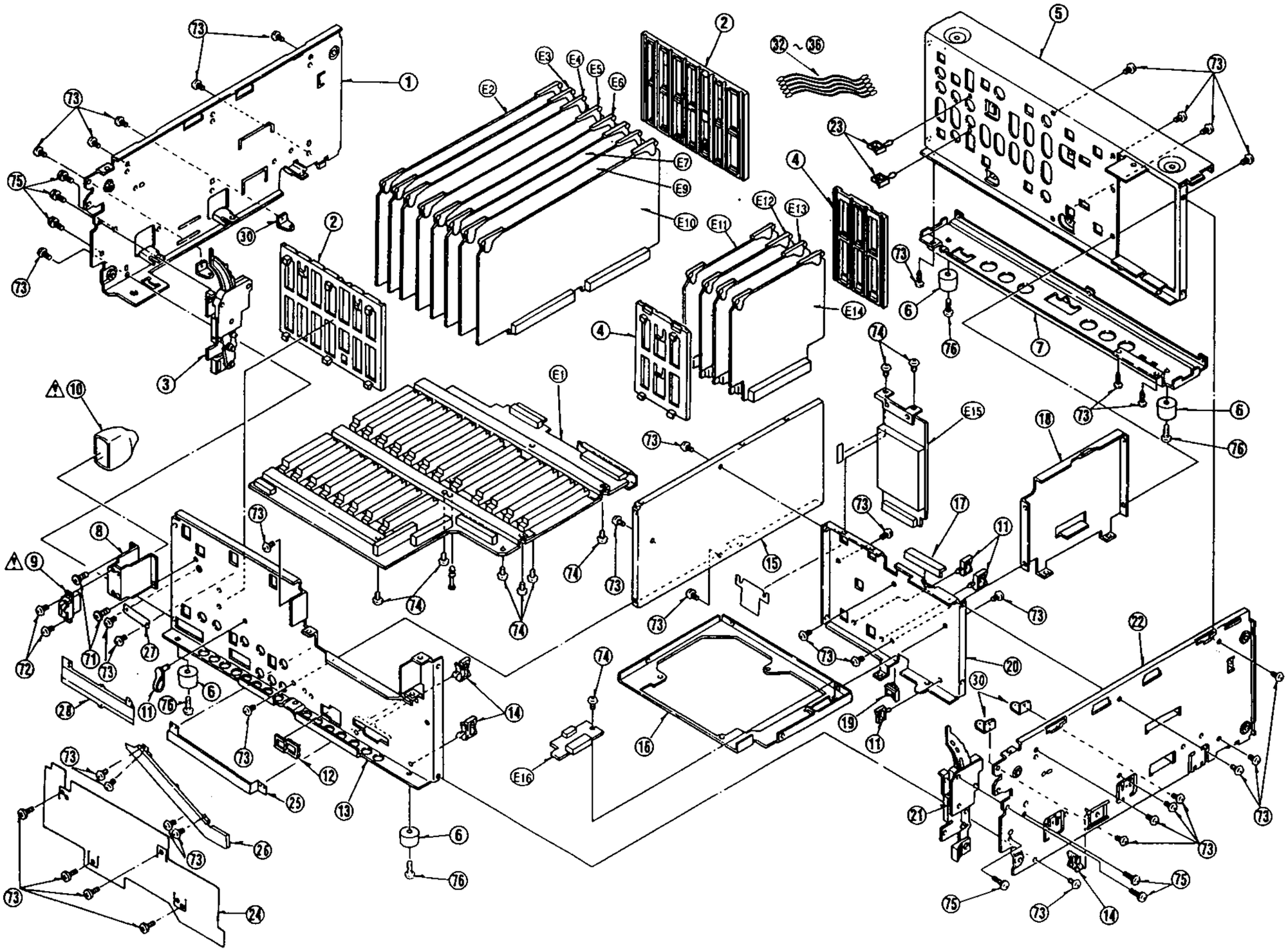

Ref.No.	Part No.	Part Name & Description	Pcs	Remarks
1	VXA6070	CASSETTE COMPARTMENT	1	(M)
2	VMS5865	MAIN SHAFT	1	
3	VMA9849	TOP PLATE	1	
4	VXA5761	FRONT GUIDE 1 ASS'Y	1	
5	VMB3075	M GUIDE SPRING	2	
6	VML3191	M GUIDE RIGHT LEVER	1	
7	VML3192	M FRONT GUIDE	2	
8	VML3190	M GUIDE LEFT LEVER	1	
9	VML3397	CASSETTE PROTECT PLATE	1	
10	VMA9760	L OPENER	1	
12	VMB2926	SPRING	1	
13	VML2A50	BLINDER PANEL OPENER	1	
23	VXL2692	OPENER ANGLE ASS'Y	1	
14	VXA6074	R SIDE PLATE 1 ASS'Y	1	
15	VML3282	SUB RAIL (R)	1	
16	VEK7695	SIDE FLEXIBLE	1	
17	VXA5766	MAIN RACK R ASS'Y	1	
18	VDG1156	WIPER RACK	2	
20	VDB1395	MAIN SHAFT ANGLE	2	
21	VDG1155	INTERLOCK GEAR	2	
22	VML3193	OPENER DRIVE ARM	1	
24	VMB2979	SPRING	1	
25	VXA6072	SIDE PLATE L 1 ASS'Y	1	
26	VML3281	SUB RAIL (L)	1	
27	VDG1254	INTERMEDIATE GEAR	1	
28	VDP1643	WIPER ROLLER	2	
29	VDG1237	CLUTCH GEAR	1	
30	VMB2980	CLUTCH SPRING	1	
31	VDG1236	WORM WHEEL	1	
32	VXA5848	MOTOR ANGLE (A) ASS'Y	1	
33	VXP1797	E.E SLOT IN WORM ASS'Y	1	
34	VXA5597	MOTOR ASS'Y	1	(M)
35	VMA9673	EMARGENCY ANGLE	1	
36	VEK7793	MOTOR P.C.BOARD	1	
37	VMA9668	HOLDER PLATE	1	
38	VEK7715	HOLDER FLEXIBLE ASS'Y	1	
39	VXA6075	MAIN RACK (L) ASS'Y	1	
40	VML2A49	WIPER ARM L	1	
41	VMB2925	WIPER SPRING L	1	
42	VDG1163	WIPER GEAR	2	
43	VMB3013	WIPER SPRING R	1	
44	VML2A52	WIPER ARM R	1	
45	VDP1642	CASSETTE GUIDE ROLLER (2)	2	
46	VDP1641	CASSETTE GUIDE ROLLER (1)	2	
47	VXA5757	CASSETTE HOLDER 1 ASS'Y	1	
48	VXA5758	ROD L	1	
49	VXA5759	ROD R	1	
50	VMB3064	SLIDE SPRING	2	
51	VML3249	SIDE GUIDE L	1	
52	VML3250	SIDE GUIDE R	1	
53	VMB3061	SLIDE GUIDE SPRING L	1	
54	VMB3062	SLIDE GUIDE SPRING R	1	
55	VMS6108	KICK OFF ROD SHAFT	2	
56	VML2A54	KICK OFF ARM L	1	
57	VML2A55	KICK OFF ARM R	1	
58	VMB2928	KICK OFF SPRING	2	
59	VML2A53	CASSETTE HOLDER ARM	2	
60	VMB2927	CASSETTE HOLDER SPRING	2	
61	VMX2833	ML DETECTION ROLLER	2	
62	VMS5882	CASSETTE HOLDER SHAFT	1	
63	VMB3253	M-L DETECTION SPRING	2	
64	VMX2559	CASSETTE PRESSURE ROLLER(2	3	
65	VMX2524	CASSETTE PRESSURE ROLLER(1	1	
66	VDG1246	EMARGENCY GEAR	1	
67	VMB3109	EMARGENCY SPRING	1	
68	VMZ2661	FRONT GUIDE COVER	1	
71	VMX0653	CUT WASHER	4	
72	VMX0967	CUT WASHER	14	
73	VMX1061	WASHER	4	
74	XQN16+A2	SCREW	8	
75	XQN2+CF3	SCREW	4	

Ref.No.	Part No.	Part Name & Description	Pcs	Remarks
76	XQN2+A2	SCREW	2	
77	XYN2+C3	SCREW	12	
78	XQN2+A3	SCREW	5	
79	LMHD16064	SCREW	10	
80	XWGV2Y4G	WASHER	2	
81	XWGV2Z5G	WASHER	2	
E28	VEP80856A	CARRIGE P.C.BOARD	1	

CASSETTE COMPARTMENT ASSEMBLY

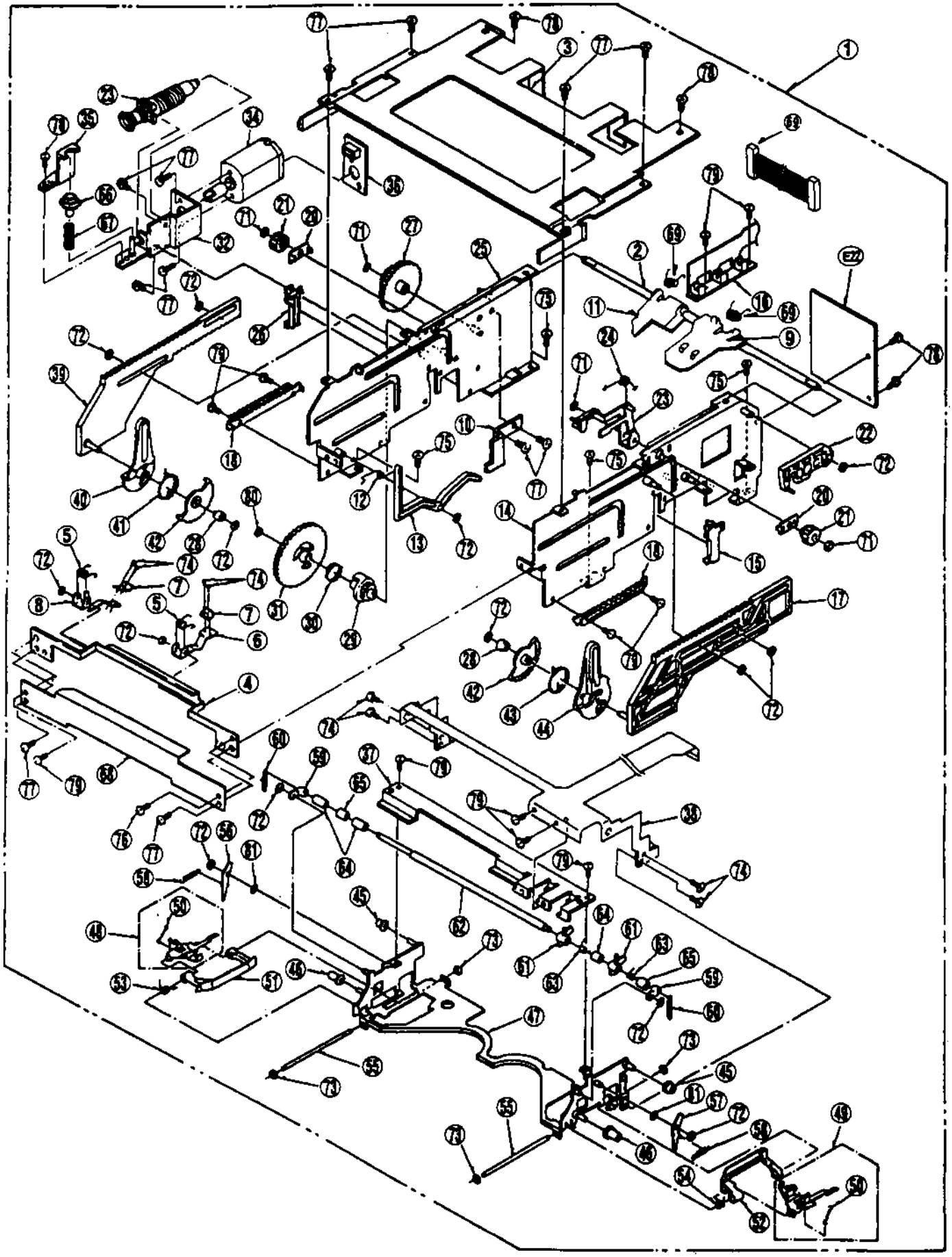

Ref.No.	Part No.	Part Name & Description	Pcs	Remarks
▪ 1	VJA0488	POWER CODE	1	FOR AJ-D850P
1	VJA0774	POWER CODE	1	FOR AJ-D850E
1	VJA0775	POWER CODE	1	FOR AJ-D850E
2	VPN4305	ACCESSORY PAD	1	
▪ 3	VQT7281	OPERATING INSTRUCTIONS	1	FOR AJ-D850P
3	VQT7282	OPERATING INSTRUCTIONS	1	FOR AJ-D850E
4	VPN4302	CUSHION UL	1	
5	VPN4304	CUSHION LL	1	
6	VPN4606	CUSHION UR	1	
7	VPN4607	CUSHION LR	1	
8	VPF0277	POLYETHYLENE BAG	1	FOR AJ-D850P
8	VPF0277	POLYETHYLENE BAG	1	FOR AJ-D850E
9	VPG9736	PACKING CASE	1	FOR AJ-D850P
9	VPG9737	PACKING CASE	1	FOR AJ-D850E
10	VPF0149	HANDLE	2	
11	VXF0159	EMARGENCY EJECT	1	

Ref.No.	Part No.	Part Name & Description	Pcs	Remarks

PACKING PARTS ASSEMBLY

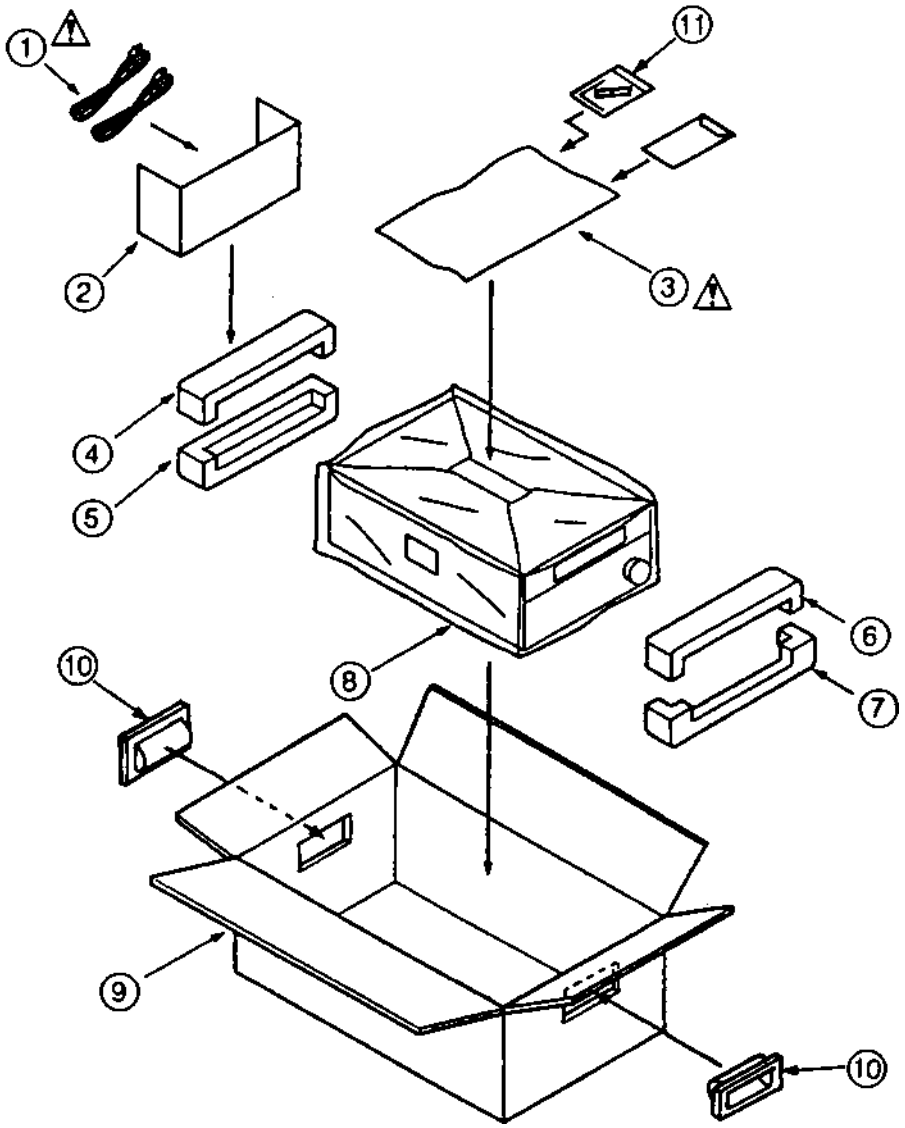

Ref.No.	Part No.	Part Name & Description	Pcs	Remarks
■E1	VEP80A48A	MOTHER P.C.BOARD	1	(RTL)
■E2	VEP82220A	F1 SERVO P.C.BOARD	1	(RTL)FOR AJ-D850P
■E2	VEP82220B	F1 SERVO P.C.BOARD	1	(RTL)FOR AJ-D850E
■E3	VEP86267A	F2 SYSCON P.C.BOARD	1	(RTL)FOR AJ-D850P
■E3	VEP86267B	F1 SYSCON P.C.BOARD	1	(RTL)FOR AJ-D850E
■E4	VEP83410C	F4 VIDEO OUT P.C.BOARD	1	(RTL)FOR AJ-D850P
■E4	VEP83410B	F4 VIDEO OUT P.C.BOARD	1	(RTL)FOR AJ-D850E
■E5	VEP83394A	F5 REC PB P.C.BOARD	1	(RTL)FOR AJ-D850P
■	VEP83405A	V BLK SUB P.C.BOARD	1	(RTL)FOR VEP83394A
■E5	VEP83394B	F5 REC PB P.C.BOARD	1	(RTL)FOR AJ-D850E
■	VEP83405B	V BLK SUB P.C.BOARD	1	(RTL)FOR VEP83394B
■E6	VEP83409B	F6 VIDEO IN P.C.BOARD	1	(RTL)FOR AJ-D850P
■E6	VEP83449A	F6 VIDEO IN P.C.BOARD	1	(RTL)FOR AJ-D850E
■E7	VEP84326A	F7 A PROCESS P.C.BOARD	1	(RTL)
■E8	VEP84301B	F8 A AD/DA P.C.BOARD	1	(RTL)
■E9	VEP84302C	H2 CUE P.C.BOARD	1	(RTL)
■E10	VEP85048A	H3 EQ P.C.BOARD	1	(RTL)
■E11	VEP85049A	H4 RF AMP P.C.BOARD	1	(RTL)
■E12	VEP85151A	HEAD BUFFER P.C.BOARD	1	(RTL)
■E13	VEP80991A	AC HEAD I/F P.C.BOARD	1	(RTL)
■E14	VEP83224A	V/S JACK P.C.BOARD	1	(RTL)
■E15	VEP81183A	POWER 1 P.C.BOARD	1	(RTL)
■E16	VEP81184B	POWER 2 P.C.BOARD	1	(RTL)
■E17	VEP80A58A	POWER INT P.C.BOARD	1	(RTL)
■E18	VEP84183A	A JACK P.C.BOARD	1	(RTL)
■E19	VEP84187A	AES/EBU P.C.BOARD	1	(RTL)
■E20	VEP80A76A	UP FRONT 1 P.C.BOARD	1	(RTL)
■E21	VEP80852A	UP FRONT 2 P.C.BOARD	1	(RTL)
■E22	VEP86263B	FRONT CPU P.C.BOARD	1	(RTL)
■E23	VEP86148A	FRONT CPU SUB P.C.BOARD	1	(RTL)
■E24	VEP80A49B	FRONT SW P.C.BOARD	1	(RTL)
■E25	VEP80963C	FRONT VR 1 P.C.BOARD	1	(RTL)
■E26	VEP80964C	FRONT VR 2 P.C.BOARD	1	(RTL)
■E27	VEP82216B	MECHA I/F P.C.BOARD	1	(RTL)
■E28	VEP80856A	CARRIGE P.C.BOARD	1	(RTL)

Ref.No.	Part No.	Part Name & Description	Pcs	Remarks
■E1	VEP80A48A	MOTHER P.C.BOARD	1	(RTL)
P001-16	VJS3814	CONNECTOR (FEMALE)	16	
P018-20	VJS3814	CONNECTOR (FEMALE)	3	
P021	VJP2891B016	CONNECTOR (MALE)	1	
P022	VJP1248T	CONNECTOR (MALE) 8P	1	
P023	VJP2891A030	CONNECTOR (MALE)	1	
P024	VJP3418A080	CONNECTOR (MALE)	1	
P025	VJP2824B003	CONNECTOR (MALE)	1	
P026	VJP2824B009	CONNECTOR (MALE)	1	
P027	VJP2824B008	CONNECTOR (MALE)	1	
P029,30	VJS3375B060	CONNECTOR (FEMALE)	2	
P031	VJP3080	CONNECTOR (MALE)	1	
P032	VJP1230T	CONNECTOR (MALE) 3P	1	
P033	VJP3375A060	CONNECTOR (MALE)	1	
		MISCELLANEOUS		
	VKC0392	SPACER	2	
	VMP4868	XLR GUIDE ANGLE (B)	1	
	VMP5641	MOTHER ANGLE (A)	1	
	VMP5642	MOTHER ANGLE (B)	1	
	VMP5643	MOTHER ANGLE (C)	1	
	XYE3+EF8FZ	SCREW	10	
	XTV26+6F	SCREW	2	
	VMX2607	PB SPACER	1	
■E2	VEP82220A	F1 SERVO P.C.BOARD	1	(RTL)FOR AJ-D850P
■E2	VEP82220B	F1 SERVO P.C.BOARD	1	(RTL)FOR AJ-D850E
C1,C2	ECUM1H103KBN	C.CAPACITOR CH 50V 0.01U	2	
C3	ECEV1CV220Q	E.CAPACITOR CH 16V 22U	1	
C4	ECEV1CV470Q	E.CAPACITOR CH 16V 47U	1	
C5,C6	ECEV1CV220Q	E.CAPACITOR CH 16V 22U	2	
C7	ECUM1H222KBN	C.CAPACITOR CH 50V 2200P	1	
C8,C9	ECUM1H103KBN	C.CAPACITOR CH 50V 0.01U	2	
C10	ECUX1H102JCN	C.CAPACITOR CH 50V 1000P	1	
C11,12	ECUM1H103KBN	C.CAPACITOR CH 50V 0.01U	2	
C13	ECUM1H101JCN	C.CAPACITOR CH 50V 100P	1	
C14	ECUM1H103KBN	C.CAPACITOR CH 50V 0.01U	1	
C15	ECUM1H222KBN	C.CAPACITOR CH 50V 2200P	1	
C30-34	ECUM1H103KBN	C.CAPACITOR CH 50V 0.01U	5	
C35	ECEV1EV330Q	E.CAPACITOR CH 25V 33U	1	
C36-38	ECUM1H103KBN	C.CAPACITOR CH 50V 0.01U	3	
C39	ECEV1CV100Q	E.CAPACITOR CH 16V 10U	1	
C40,41	ECUX1H333KBN	C.CAPACITOR CH 50V 0.033U	2	
C42,43	ECUM1H103KBN	C.CAPACITOR CH 50V 0.01U	2	
C60,61	ECUM1H103KBN	C.CAPACITOR CH 50V 0.01U	2	
C63-74	ECUM1H103KBN	C.CAPACITOR CH 50V 0.01U	12	
C80,81	ECUX1H102JCN	C.CAPACITOR CH 50V 1000P	2	
C82	ECUM1H103KBN	C.CAPACITOR CH 50V 0.01U	1	
C83	ECUM1H100DCN	C.CAPACITOR CH 50V 10P	1	
C84	ECUM1H103KBN	C.CAPACITOR CH 50V 0.01U	1	
C85,86	ECEV1EV330Q	E.CAPACITOR CH 25V 33U	2	
C87	ECUM1H103KBN	C.CAPACITOR CH 50V 0.01U	1	
C88	ECUM1H100DCN	C.CAPACITOR CH 50V 10P	1	
C89,90	ECUX1H102JCN	C.CAPACITOR CH 50V 1000P	2	
C91	ECUM1H103KBN	C.CAPACITOR CH 50V 0.01U	1	
C92,93	ECEV1EV330Q	E.CAPACITOR CH 25V 33U	2	
C94,95	ECUM1H103KBN	C.CAPACITOR CH 50V 0.01U	2	
C120,21	ECUX1H102JCN	C.CAPACITOR CH 50V 1000P	2	
C123	ECUM1H103KBN	C.CAPACITOR CH 50V 0.01U	1	
C124,25	ECUM1H100DCN	C.CAPACITOR CH 50V 10P	2	
C126	ECUM1H103KBN	C.CAPACITOR CH 50V 0.01U	1	
C127,28	ECEV1EV330Q	E.CAPACITOR CH 25V 33U	2	
C129,30	ECUM1H103KBN	C.CAPACITOR CH 50V 0.01U	2	
C131,32	ECUX1H102JCN	C.CAPACITOR CH 50V 1000P	2	
C133,34	ECEV1EV330Q	E.CAPACITOR CH 25V 33U	2	
C135	ECUM1H103KBN	C.CAPACITOR CH 50V 0.01U	1	
C160,61	ECUX1H102JCN	C.CAPACITOR CH 50V 1000P	2	
C162	ECUM1H103KBN	C.CAPACITOR CH 50V 0.01U	1	

Ref.No.	Part No.	Part Name & Description	Pcs	Remarks
C163,64	ECUM1H100DCN	C.CAPACITOR CH 50V 10P	2	
C165	ECUM1H103KBN	C.CAPACITOR CH 50V 0.01U	1	
C166,67	ECEV1EV330Q	E.CAPACITOR CH 25V 33U	2	
C168,69	ECUM1H103KBN	C.CAPACITOR CH 50V 0.01U	2	
C170,71	ECUX1H102JCN	C.CAPACITOR CH 50V 1000P	2	
C172	ECUM1H103KBN	C.CAPACITOR CH 50V 0.01U	1	
C173,74	ECEV1EV330Q	E.CAPACITOR CH 25V 33U	2	
C175	ECUM1H103KBN	C.CAPACITOR CH 50V 0.01U	1	
C200	ECUM1H472KBN	C.CAPACITOR CH 50V 4700P	1	
C202,03	ECUM1H103KBN	C.CAPACITOR CH 50V 0.01U	2	
C204	ECEV1CV470Q	E.CAPACITOR CH 16V 47U	1	
C205-07	ECUM1H103KBN	C.CAPACITOR CH 50V 0.01U	3	
C208-10	ECUM1H472KBN	C.CAPACITOR CH 50V 4700P	3	
C211	ECEV1CV470Q	E.CAPACITOR CH 16V 47U	1	
C212,13	ECUM1H103KBN	C.CAPACITOR CH 50V 0.01U	2	
C214	ECEV1CV470Q	E.CAPACITOR CH 16V 47U	1	
C215,16	ECUX1E104KBN	C.CAPACITOR CH 25V 0.1U	2	
C218	ECUM1H103KBN	C.CAPACITOR CH 50V 0.01U	1	
C230-32	ECUX1H102JCN	C.CAPACITOR CH 50V 1000P	3	
C233-36	ECUM1H103KBN	C.CAPACITOR CH 50V 0.01U	4	
C237	ECEV1CV470Q	E.CAPACITOR CH 16V 47U	1	
C238	ECUM1H103KBN	C.CAPACITOR CH 50V 0.01U	1	
C239	ECEV1CV470Q	E.CAPACITOR CH 16V 47U	1	
C240-44	ECUM1H103KBN	C.CAPACITOR CH 50V 0.01U	5	
C246-49	ECUM1H103KBN	C.CAPACITOR CH 50V 0.01U	4	
C250,51	ECUM1H150JCN	C.CAPACITOR CH 50V 15P	2	
C260,61	ECUM1H103KBN	C.CAPACITOR CH 50V 0.01U	2	
C263-70	ECUM1H103KBN	C.CAPACITOR CH 50V 0.01U	8	
C280-84	ECUM1H103KBN	C.CAPACITOR CH 50V 0.01U	5	
C286	ECUM1H103KBN	C.CAPACITOR CH 50V 0.01U	1	
C300-02	ECUM1H103KBN	C.CAPACITOR CH 50V 0.01U	3	
C303	ECEV1CV470Q	E.CAPACITOR CH 16V 47U	1	
C304-08	ECUM1H103KBN	C.CAPACITOR CH 50V 0.01U	5	
C309	ECEV1CV470Q	E.CAPACITOR CH 16V 47U	1	
C310	ECUM1H103KBN	C.CAPACITOR CH 50V 0.01U	1	
C320,21	ECUM1H103KBN	C.CAPACITOR CH 50V 0.01U	2	
C322	ECUM1H104ZFN	C.CAPACITOR CH 50V 0.1U	1	
C323	ECEV1CV100Q	E.CAPACITOR CH 16V 10U	1	
C324	ECUX1H682KBN	C.CAPACITOR CH 50V 6800P	1	
C325,26	ECEV1CV100Q	E.CAPACITOR CH 16V 10U	2	
C327,28	ECUM1H104ZFN	C.CAPACITOR CH 50V 0.1U	2	
C329	ECEV1CV100Q	E.CAPACITOR CH 16V 10U	1	
C330	ECUX1H102JCN	C.CAPACITOR CH 50V 1000P	1	
C331-34	ECUM1H103KBN	C.CAPACITOR CH 50V 0.01U	4	
C335,36	ECUM1H080DCN	C.CAPACITOR CH 50V 8P	2	
C337	ECUM1H103KBN	C.CAPACITOR CH 50V 0.01U	1	
C340	ECUM1H104ZFN	C.CAPACITOR CH 50V 0.1U	1	
C341	ECA1EXLV101	E.CAPACITOR 25V 100U	1	
C342,43	ECUM1H103KBN	C.CAPACITOR CH 50V 0.01U	2	
C344	ECUX1H682KBN	C.CAPACITOR CH 50V 6800P	1	
C345	ECA1EXLV101	E.CAPACITOR 25V 100U	1	
C346-48	ECUM1H104ZFN	C.CAPACITOR CH 50V 0.1U	3	
C349-53	ECUM1H103KBN	C.CAPACITOR CH 50V 0.01U	5	
C354	ECUX1H102JCN	C.CAPACITOR CH 50V 1000P	1	
C355	ECUM1H103KBN	C.CAPACITOR CH 50V 0.01U	1	
C356	ECUM1H104ZFN	C.CAPACITOR CH 50V 0.1U	1	
C357	ECUX1H682KBN	C.CAPACITOR CH 50V 6800P	1	
C358	ECA1EXLV101	E.CAPACITOR 25V 100U	1	
C359	ECUM1H104ZFN	C.CAPACITOR CH 50V 0.1U	1	
C360	ECA1EXLV101	E.CAPACITOR 25V 100U	1	
C361	ECUM1H104ZFN	C.CAPACITOR CH 50V 0.1U	1	
C362	ECA1EXLV101	E.CAPACITOR 25V 100U	1	
C380,81	ECUM1H103KBN	C.CAPACITOR CH 50V 0.01U	2	
C382	ECEV1CV470Q	E.CAPACITOR CH 16V 47U	1	
C383	ECUX1H682KBN	C.CAPACITOR CH 50V 6800P	1	
C384	ECEV1CV470Q	E.CAPACITOR CH 16V 47U	1	
C385,86	ECUM1H103KBN	C.CAPACITOR CH 50V 0.01U	2	
C387	ECEV1CV470Q	E.CAPACITOR CH 16V 47U	1	
C388	ECUX1H682KBN	C.CAPACITOR CH 50V 6800P	1	
C389	ECEV1CV470Q	E.CAPACITOR CH 16V 47U	1	
C390	ECUM1H103KBN	C.CAPACITOR CH 50V 0.01U	1	
C391	ECEV1CV470Q	E.CAPACITOR CH 16V 47U	1	
C400	ECEV1CV470Q	E.CAPACITOR CH 16V 47U	1	
C401-03	ECUM1H103KBN	C.CAPACITOR CH 50V 0.01U	3	
C404-06	ECUX1E104KBN	C.CAPACITOR CH 25V 0.1U	3	

Ref.No.	Part No.	Part Name & Description	Pcs	Remarks
C407	ECEV1CV100Q	E.CAPACITOR CH 16V 10U	1	
C408	ECUM1H103KBN	C.CAPACITOR CH 50V 0.01U	1	
C409-11	ECUM1H104ZFN	C.CAPACITOR CH 50V 0.1U	3	
C412	ECUM1E224ZFN	C.CAPACITOR CH 25V 0.22U	1	
C413	ECUM1H103KBN	C.CAPACITOR CH 50V 0.01U	1	
C414	ECUX1C105KBM	C.CAPACITOR CH 16V 1U	1	
C415	ECUM1H152KBN	C.CAPACITOR CH 50V 1500P	1	
C416-18	ECUM1H103KBN	C.CAPACITOR CH 50V 0.01U	3	
C419	ECEV1HV4R7Q	E.CAPACITOR CH 50V 4.7U	1	
C420	ECEV1CV100Q	E.CAPACITOR CH 16V 10U	1	
C421	ECUM1H103KBN	C.CAPACITOR CH 50V 0.01U	1	
C422	ECUM1H331JCN	C.CAPACITOR CH 50V 330P	1	
C423	ECEV1CV470Q	E.CAPACITOR CH 16V 47U	1	
C424-27	ECUM1H103KBN	C.CAPACITOR CH 50V 0.01U	4	
C428,29	ECUX1E104KBN	C.CAPACITOR CH 25V 0.1U	2	
C430	ECUM1H103KBN	C.CAPACITOR CH 50V 0.01U	1	
C431	ECEV1CV100Q	E.CAPACITOR CH 16V 10U	1	
C432-34	ECUM1H104ZFN	C.CAPACITOR CH 50V 0.1U	3	
C450	ECUX1H223KBN	C.CAPACITOR CH 50V 0.22U	1	
C451,52	ECUM1H103KBN	C.CAPACITOR CH 50V 0.01U	2	
C453,54	ECUX1E473KBN	C.CAPACITOR CH 25V 0.047U	2	
C455	ECUM1H104ZFN	C.CAPACITOR CH 50V 0.1U	1	
C456	ECEV1HV2R2Q	E.CAPACITOR CH 50V 2.2U	1	
C457	ECUM1H104ZFN	C.CAPACITOR CH 50V 0.1U	1	
C458,59	ECEV1HV2R2Q	E.CAPACITOR CH 50V 2.2U	2	
C460	ECUM1H104ZFN	C.CAPACITOR CH 50V 0.1U	1	
C461	ECUX1E473KBN	C.CAPACITOR CH 25V 0.047U	1	
C462	ECUM1H472KBN	C.CAPACITOR CH 50V 4700P	1	
C463	ECUX1H333KBN	C.CAPACITOR CH 50V 0.033U	1	
C464	ECUM1H472KBN	C.CAPACITOR CH 50V 4700P	1	
C465	ECUX1H333KBN	C.CAPACITOR CH 50V 0.033U	1	
C466	ECUM1H472KBN	C.CAPACITOR CH 50V 4700P	1	
C467	ECUX1H333KBN	C.CAPACITOR CH 50V 0.033U	1	
C468,69	ECUX1E104KBN	C.CAPACITOR CH 25V 0.1U	2	
C470	ECUM1H103KBN	C.CAPACITOR CH 50V 0.01U	1	
C471	ECEV1CV100Q	E.CAPACITOR CH 16V 10U	1	
C472	ECUX1C474KBM	C.CAPACITOR CH 16V 0.47U	1	
C473	ECUX1H223KBN	C.CAPACITOR CH 50V 0.22U	1	
C474,75	ECUX1E473KBN	C.CAPACITOR CH 25V 0.047U	2	
C476	ECUM1H104ZFN	C.CAPACITOR CH 50V 0.1U	1	
C477,78	ECEV1HV2R2Q	E.CAPACITOR CH 50V 2.2U	2	
C479	ECUM1H104ZFN	C.CAPACITOR CH 50V 0.1U	1	
C480	ECEV1HV2R2Q	E.CAPACITOR CH 50V 2.2U	1	
C481	ECUM1H104ZFN	C.CAPACITOR CH 50V 0.1U	1	
C482	ECUX1E473KBN	C.CAPACITOR CH 25V 0.047U	1	
C483	ECUM1H472KBN	C.CAPACITOR CH 50V 4700P	1	
C484	ECUX1H333KBN	C.CAPACITOR CH 50V 0.033U	1	
C485	ECUM1H472KBN	C.CAPACITOR CH 50V 4700P	1	
C486	ECUX1H333KBN	C.CAPACITOR CH 50V 0.033U	1	
C487	ECUM1H472KBN	C.CAPACITOR CH 50V 4700P	1	
C488	ECUX1H333KBN	C.CAPACITOR CH 50V 0.033U	1	
C489,90	ECUX1E104KBN	C.CAPACITOR CH 25V 0.1U	2	
C491	ECUM1H103KBN	C.CAPACITOR CH 50V 0.01U	1	
C492	ECEV1CV100Q	E.CAPACITOR CH 16V 10U	1	
C493	ECUX1C474KBM	C.CAPACITOR CH 16V 0.47U	1	
C510	ECUM1H103KBN	C.CAPACITOR CH 50V 0.01U	1	
C511	ECEV1CV470Q	E.CAPACITOR CH 16V 47U	1	
C512,13	ECUM1H103KBN	C.CAPACITOR CH 50V 0.01U	2	
C514	ECEV1CV470Q	E.CAPACITOR CH 16V 47U	1	
C515	ECUM1H103KBN	C.CAPACITOR CH 50V 0.01U	1	
C516	ECEV1EV330Q	E.CAPACITOR CH 25V 33U	1	
C517-19	ECUM1H103KBN	C.CAPACITOR CH 50V 0.01U	3	
C520	ECEV1EV330Q	E.CAPACITOR CH 25V 33U	1	
C521	ECUM1H103KBN	C.CAPACITOR CH 50V 0.01U	1	
C522,23	ECEV1HV010Q	E.CAPACITOR CH 50V 1U	2	
C524	ECEV1EV330Q	E.CAPACITOR CH 25V 33U	1	
C525	ECUM1H103KBN	C.CAPACITOR CH 50V 0.01U	1	
C526	ECEV1EV330Q	E.CAPACITOR CH 25V 33U	1	
C527,28	ECUM1H103KBN	C.CAPACITOR CH 50V 0.01U	2	
C529	ECEV1EV330Q	E.CAPACITOR CH 25V 33U	1	
C530-32	ECUM1H103KBN	C.CAPACITOR CH 50V 0.01U	3	
C533	ECEV1AV330Q	E.CAPACITOR CH 10V 33U	1	
C534	ECUM1H103KBN	C.CAPACITOR CH 50V 0.01U	1	
C535	ECEV1EV330Q	E.CAPACITOR CH 25V 33U	1	
C536	ECUM1H103KBN	C.CAPACITOR CH 50V 0.01U	1	

Ref.No.	Part No.	Part Name & Description	Pcs	Remarks
C537	ECEV1HV010Q	E.CAPACITOR CH 50V 1U	1	
C538	ECEV1EV330Q	E.CAPACITOR CH 25V 33U	1	
C539	ECUM1H103KBN	C.CAPACITOR CH 50V 0.01U	1	
C600,01	ECUM1H103KBN	C.CAPACITOR CH 50V 0.01U	2	
C602	ECUM1H330JCN	C.CAPACITOR CH 50V 33P	1	
C751	ECUX1E104KBN	C.CAPACITOR CH 25V 0.1U	1	
D1,D2	MA157	DIODE	2	
D3,D4	MA8075-H	DIODE	2	
D30,31	MA8030	DIODE	2	
D32	MA8047-H	DIODE	1	
D33-36	MA152K	DIODE	4	
D80-83	MA157	DIODE	4	
D120-23	MA157	DIODE	4	
D160-63	MA157	DIODE	4	
D200,01	MA152K	DIODE	2	
D202	MA8047-H	DIODE	1	
D203	MA152K	DIODE	1	
D204,05	MA8047-H	DIODE	2	
D206-09	MA152K	DIODE	4	
D300-02	LN1251CAL	DIODE	3	
D320,21	MA157	DIODE	2	
D340	MA728	DIODE	1	
D341	MA736	DIODE	1	
D342	MA728	DIODE	1	
D343	MA736	DIODE	1	
D344	MA8039-L	DIODE	1	
D380	MA728	DIODE	1	
D381	MA736	DIODE	1	
D382	MA728	DIODE	1	
D383	MA736	DIODE	1	
D400-05	MA738	DIODE	6	
D406,07	MA8047-H	DIODE	2	
D408-13	MA738	DIODE	6	
D450	MA152K	DIODE	1	
D451-56	MA738	DIODE	6	
D457	MA152K	DIODE	1	
D458-63	MA738	DIODE	6	
D510-13	MA701A	DIODE	4	
D514-19	MA704A	DIODE	6	
FL320,21	VLF1016A470	FILTER	2	
FL510-15	VLF0576	FILTER	6	
IC1	TC7WU04F	IC	1	
IC2	UPC4082G2	IC	1	
IC3	TC4052BF	IC	1	
IC30	UPC4082G2	IC	1	
IC31	NJM4580ED	IC	1	
IC32	AD633JR	IC	1	
IC33	UPC4082G2	IC	1	
IC34	MC74HC74AF	IC	1	
IC35	TC7W00F	IC	1	
IC60,61	MC74HC08AF	IC	2	
IC63-66	MC74HC74AF	IC	4	
IC67	MC74HC157AF	IC	1	
IC68	T74HC191AF	IC	1	
IC69	MC74HC32AF	IC	1	
IC70	MC74HC86AF	IC	1	
IC71	MC74HC04AF	IC	1	
IC72	MC74HC74AF	IC	1	
IC73	MC74HC11F	IC	1	
IC74	MC74HC27F	IC	1	
IC80,81	UPC4741G2	IC	2	
IC82	NJM2901M	IC	1	
IC83	MC74HC4050F	IC	1	
IC120,21	UPC4741G2	IC	2	
IC160	NJM2901M	IC	1	
IC161,62	UPC4741G2	IC	2	
IC200	ADG408BR	IC	1	
IC201	AD7896AR	IC	1	
IC202	AD7943BR	IC	1	
IC203	SMP08FS	IC	1	
IC204	MC74HC244AF	IC	1	
IC205	UPC4082G2	IC	1	

Ref.No.	Part No.	Part Name & Description	Pcs	Remarks
IC207	UPC4082G2	IC	1	
IC230	MC68332CFC25	IC	1	
IC231	TL7705CPSB	IC	1	
IC235	VSI2965	IC	1	FOR VEP82220A
IC235	VSI2964	IC	1	FOR VEP82220B
IC236,37	74AC74SJ	IC	2	
IC238	TC7WU04F	IC	1	
IC240	74AC08SJ	IC	1	
IC241	MC74HC244AF	IC	1	
IC260,61	Y7C18525SC	IC	2	
IC262	IDT71321A55	IC	1	
IC263,64	SN74S1051NS	IC	2	
IC265	MC74HC175F	IC	1	
IC266	MC74HC164AF	IC	1	
IC267	MC74HC273AF	IC	1	
IC268	MC74HC74AF	IC	1	
IC269	MC74HC86AF	IC	1	
IC280	MC74HCT244AF	IC	1	
IC282	SLA909SF1G	IC	1	
IC300	TE7751	IC	1	
IC301,02	MC74HC244AF	IC	2	
IC303	T74VHCT244F	IC	1	
IC304,05	MC74HC244AF	IC	2	
IC320	SC371025AVFU	IC	1	
IC321	MC14053BF	IC	1	
IC322	MC74HC574AF	IC	1	
IC323	TC7WU04F	IC	1	
IC324	T74VHCU04F	IC	1	
IC325	74AC74SJ	IC	1	
IC326	MC74HC74AF	IC	1	
IC340	TL1451CNS	IC	1	
IC341	UPC393G2	IC	1	
IC342	NJM4580ED	IC	1	
IC400,01	AN3890FBS	IC	2	
IC402	NJM4580ED	IC	1	
IC403	NJM2903M	IC	1	
IC404	NJM4580ED	IC	1	
IC450,51	AN3834K	IC	2	
IC452	UPC4558G2	IC	1	
IC510,11	NJM78L09UA	IC	2	
IC512,13	NJM79L09UA	IC	2	
IC514	XC62AP5002P	IC	1	
IC515,16	XC62AP3002P	IC	2	
IC517	NJM79L05UA	IC	1	
IC600	NJM2903M	IC	1	
IC717	TCVHC32F	IC	1	
IS235	VJS2336A040	CONNECTOR (FEMALE) 5P	1	
L230,31	VLQ0576	COIL	2	
L340	VLQ0504331K	COIL	1	
L341	VLQ0407120M	COIL 12UH	1	
L342	VLQ0504331K	COIL	1	
L380	VLQ0407120M	COIL 12UH	1	
L381,82	VLQ0504331K	COIL	2	
L510	VLP0133	COIL	1	
P1,P2	VJP3454B096	CONNECTOR (MALE)	2	
Q1	2SD601A-R	TRANSISTOR	1	
Q2,Q3	2SB709A-R	TRANSISTOR	2	
Q4	2SD601A-R	TRANSISTOR	1	
Q5	2SB709A-R	TRANSISTOR	1	
Q6	2SD601A-R	TRANSISTOR	1	
Q340,41	2SB1174-Q	TRANSISTOR	2	
Q380,81	2SB1174-Q	TRANSISTOR	2	
Q400	PU3210	TRANSISTOR	1	
Q401	PU3110	TRANSISTOR	1	
Q402	PU3210	TRANSISTOR	1	
Q403	PU3110	TRANSISTOR	1	
Q510,11	2SD601A-R	TRANSISTOR	2	
QR1	UN2213	TRANSISTOR-RESISTOR	1	
QR2	UN2113	TRANSISTOR-RESISTOR	1	
QR3	UN2215	TRANSISTOR-RESISTOR	1	

Ref.No.	Part No.	Part Name & Description	Pcs	Remarks
QR4	UN2115	TRANSISTOR-RESISTOR	1	
QR5,R6	UN2213	TRANSISTOR-RESISTOR	2	
QR7,R8	UN2113	TRANSISTOR-RESISTOR	2	
QR30	UN2213	TRANSISTOR-RESISTOR	1	
QR81,82	UN2213	TRANSISTOR-RESISTOR	2	
QR83	UN2113	TRANSISTOR-RESISTOR	1	
QR84	UN2213	TRANSISTOR-RESISTOR	1	
QR85	UN2113	TRANSISTOR-RESISTOR	1	
QR120	UN2213	TRANSISTOR-RESISTOR	1	
QR121	UN2113	TRANSISTOR-RESISTOR	1	
QR122	UN2213	TRANSISTOR-RESISTOR	1	
QR123	UN2113	TRANSISTOR-RESISTOR	1	
QR124	UN2213	TRANSISTOR-RESISTOR	1	
QR160	UN2213	TRANSISTOR-RESISTOR	1	
QR161	UN2113	TRANSISTOR-RESISTOR	1	
QR162	UN2213	TRANSISTOR-RESISTOR	1	
QR163	UN2113	TRANSISTOR-RESISTOR	1	
QR164	UN2213	TRANSISTOR-RESISTOR	1	
QR340,41	UN2111	TRANSISTOR-RESISTOR	2	
QR400	UN2213	TRANSISTOR-RESISTOR	1	
QR401	UN2113	TRANSISTOR-RESISTOR	1	
QR600	UN2217	TRANSISTOR-RESISTOR	1	
QR601	UN2211	TRANSISTOR-RESISTOR	1	
R1-R3	ERJ6GEYG102	M.RESISTOR CH 1/10W 1K	3	
R4	ERJ6RBD471	M.RESISTOR CH 1/10W 470	1	
R5	ERJ6GEYG102	M.RESISTOR CH 1/10W 1K	1	
R6	ERJ6RBD471	M.RESISTOR CH 1/10W 470	1	
R7	ERJ6GEYG152	M.RESISTOR CH 1/10W 1.5K	1	
R8	ERJ6GEYG563	M.RESISTOR CH 1/10W 56K	1	
R9,10	ERJ6GEYG104	M.RESISTOR CH 1/10W 100K	2	
R11	ERJ6GEYG563	M.RESISTOR CH 1/10W 56K	1	
R12,13	ERJ6GEYG103	M.RESISTOR CH 1/10W 10K	2	
R14	ERJ6GEYJ274	M.RESISTOR CH 1/10W 270K	1	
R15	ERJ6GEYG823	M.RESISTOR CH 1/10W 82K	1	
R16	ERJ6GEYG153	M.RESISTOR CH 1/10W 15K	1	
R17	ERJ6GEYG272	M.RESISTOR CH 1/10W 2.7K	1	
R18	ERJ6GEYG823	M.RESISTOR CH 1/10W 82K	1	
R19,20	ERJ6GEYG103	M.RESISTOR CH 1/10W 10K	2	
R21	ERJ6GEYG104	M.RESISTOR CH 1/10W 100K	1	
R25-29	ERJ6GEY0R00	M.RESISTOR CH 1/10W 0	5	
R31	ERJ6GEYG183	M.RESISTOR CH 1/10W 18K	1	
R32	ERJ6GEYG103	M.RESISTOR CH 1/10W 10K	1	
R33	ERJ6RBD122	M.RESISTOR CH 1/10W 1.2K	1	
R34	ERJ6RBD563	M.RESISTOR CH 1/10W 56K	1	
R35	ERJ6GEYG223	M.RESISTOR CH 1/10W 22K	1	
R36	ERJ6RBD562	M.RESISTOR CH 1/10W 5.6K	1	
R37	ERJ6RBD823	M.RESISTOR CH 1/10W 82K	1	
R38,39	ERJ6RBD222	M.RESISTOR CH 1/10W 2.2K	2	
R40	ERJ6GEYG222	M.RESISTOR CH 1/10W 2.2K	1	
R41	ERJ6GEYG562	M.RESISTOR CH 1/10W 5.6K	1	
R42	ERJ6GEYG682	M.REISITOR CH 1/10W 6.8K	1	
R43-45	ERJ6GEYG103	M.RESISTOR CH 1/10W 10K	3	
R46	ERJ6GEY0R00	M.RESISTOR CH 1/10W 0	1	
R48	ERJ6GEYG103	M.RESISTOR CH 1/10W 10K	1	
R49	ERJ6GEYG222	M.RESISTOR CH 1/10W 2.2K	1	
R50	ERJ6RBD471	M.RESISTOR CH 1/10W 470	1	
R51	ERJ6RBD562	M.RESISTOR CH 1/10W 5.6K	1	
R52	ERJ6RBD471	M.RESISTOR CH 1/10W 470	1	
R53	ERJ6RBD823	M.RESISTOR CH 1/10W 82K	1	
R54	ERJ6GEYG562	M.RESISTOR CH 1/10W 5.6K	1	
R55	ERJ6GEYG682	M.REISITOR CH 1/10W 6.8K	1	
R56-59	ERJ6GEY0R00	M.RESISTOR CH 1/10W 0	4	
R60	ERJ6GEYG101	M.RESISTOR CH 1/10W 100	1	
R61-77	ERJ6GEY0R00	M.RESISTOR CH 1/10W 0	17	
R80,81	ERJ6GEYG222	M.RESISTOR CH 1/10W 2.2K	2	
R82,83	ERJ6RBD223	M.RESISTOR CH 1/10W 22K	2	
R84	ERJ6GEYG474	M.RESISTOR CH 1/10W 470K	1	
R85	ERJ6GEYG103	M.RESISTOR CH 1/10W 10K	1	
R86	ERJ6GEYG474	M.RESISTOR CH 1/10W 470K	1	
R87,88	ERJ6GEYG103	M.RESISTOR CH 1/10W 10K	2	
R89,90	ERJ6GEYG224	M.RESISTOR CH 1/10W 220K	2	
R91,92	ERJ6GEYG154	M.RESISTOR CH 1/10W 150K	2	
R93	ERJ6GEYG562	M.RESISTOR CH 1/10W 5.6K	1	
R94	ERJ6GEYG224	M.RESISTOR CH 1/10W 220K	1	

Ref.No.	Part No.	Part Name & Description	Pcs	Remarks
R95	ERJ6GEYG562	M.RESISTOR CH 1/10W 5.6K	1	
R96	ERJ6GEYG273	M.RESISTOR CH 1/10W 27K	1	
R97	ERJ6GEYF333	M.RESISTOR CH 1/10W 33K	1	
R98,99	ERJ6GEYG222	M.RESISTOR CH 1/10W 2.2K	2	
R100,01	ERJ6GEYG103	M.RESISTOR CH 1/10W 10K	2	
R102,03	ERJ6GEYG224	M.RESISTOR CH 1/10W 220K	2	
R104	ERJ6GEYG562	M.RESISTOR CH 1/10W 5.6K	1	
R105	ERJ6GEYG224	M.RESISTOR CH 1/10W 220K	1	
R106	ERJ6GEYG562	M.RESISTOR CH 1/10W 5.6K	1	
R107	ERJ6GEYG273	M.RESISTOR CH 1/10W 27K	1	
R108	ERJ6GEYF333	M.RESISTOR CH 1/10W 33K	1	
R109	ERJ6GEYG103	M.RESISTOR CH 1/10W 10K	1	
R120,21	ERJ6GEYG222	M.RESISTOR CH 1/10W 2.2K	2	
R122,23	ERJ6RBD223	M.RESISTOR CH 1/10W 22K	2	
R124	ERJ6GEYG103	M.RESISTOR CH 1/10W 10K	1	
R125	ERJ6GEYG474	M.RESISTOR CH 1/10W 470K	1	
R126	ERJ6GEYG103	M.RESISTOR CH 1/10W 10K	1	
R127	ERJ6GEYG474	M.RESISTOR CH 1/10W 470K	1	
R128,29	ERJ6GEYG103	M.RESISTOR CH 1/10W 10K	2	
R130,31	ERJ6RED224	M.RESISTOR CH 1/10W 220K	2	
R132,33	ERJ6GEYG154	M.RESISTOR CH 1/10W 150K	2	
R134	ERJ6GEYG103	M.RESISTOR CH 1/10W 10K	1	
R135	ERJ6GEYG224	M.RESISTOR CH 1/10W 220K	1	
R136	ERJ6GEYG562	M.RESISTOR CH 1/10W 5.6K	1	
R137	ERJ6GEYG273	M.RESISTOR CH 1/10W 27K	1	
R138	ERJ6GEYF333	M.RESISTOR CH 1/10W 33K	1	
R139,40	ERJ6GEYG222	M.RESISTOR CH 1/10W 2.2K	2	
R141,42	ERJ6GEYG103	M.RESISTOR CH 1/10W 10K	2	
R143,44	ERJ6RED224	M.RESISTOR CH 1/10W 220K	2	
R145	ERJ6GEYG103	M.RESISTOR CH 1/10W 10K	1	
R146	ERJ6GEYG224	M.RESISTOR CH 1/10W 220K	1	
R147	ERJ6GEYG562	M.RESISTOR CH 1/10W 5.6K	1	
R148	ERJ6GEYG273	M.RESISTOR CH 1/10W 27K	1	
R149	ERJ6GEYF333	M.RESISTOR CH 1/10W 33K	1	
R160,61	ERJ6GEYG222	M.RESISTOR CH 1/10W 2.2K	2	
R162,63	ERJ6RBD223	M.RESISTOR CH 1/10W 22K	2	
R164	ERJ6GEYG103	M.RESISTOR CH 1/10W 10K	1	
R165	ERJ6GEYG474	M.RESISTOR CH 1/10W 470K	1	
R166	ERJ6GEYG103	M.RESISTOR CH 1/10W 10K	1	
R167	ERJ6GEYG474	M.RESISTOR CH 1/10W 470K	1	
R168,69	ERJ6GEYG103	M.RESISTOR CH 1/10W 10K	2	
R170,71	ERJ6RED224	M.RESISTOR CH 1/10W 220K	2	
R172	ERJ6GEYG103	M.RESISTOR CH 1/10W 10K	1	
R173	ERJ6GEYG224	M.RESISTOR CH 1/10W 220K	1	
R174	ERJ6GEYG562	M.RESISTOR CH 1/10W 5.6K	1	
R175	ERJ6GEYG273	M.RESISTOR CH 1/10W 27K	1	
R176	ERJ6GEYF333	M.RESISTOR CH 1/10W 33K	1	
R177,78	ERJ6GEYG154	M.RESISTOR CH 1/10W 150K	2	
R179,80	ERJ6GEYG222	M.RESISTOR CH 1/10W 2.2K	2	
R181,82	ERJ6GEYG103	M.RESISTOR CH 1/10W 10K	2	
R183,84	ERJ6RED224	M.RESISTOR CH 1/10W 220K	2	
R185	ERJ6GEYG103	M.RESISTOR CH 1/10W 10K	1	
R186	ERJ6GEYG224	M.RESISTOR CH 1/10W 220K	1	
R187	ERJ6GEYG562	M.RESISTOR CH 1/10W 5.6K	1	
R188	ERJ6GEYG273	M.RESISTOR CH 1/10W 27K	1	
R189	ERJ6GEYF333	M.RESISTOR CH 1/10W 33K	1	
R200	ERJ6GEYG223	M.RESISTOR CH 1/10W 22K	1	
R201,02	ERJ6GEYG222	M.RESISTOR CH 1/10W 2.2K	2	
R203	ERJ6GEYG471	M.RESISTOR CH 1/10W 470	1	
R204	ERJ6RBD303	M.RESISTOR CH 1/10W 30K	1	
R205	ERJ6RBD153	M.RESISTOR CH 1/10W 15K	1	
R206	ERJ6GEYG102	M.RESISTOR CH 1/10W 1K	1	
R207	ERJ6GEYG223	M.RESISTOR CH 1/10W 22K	1	
R208	ERJ6GEYG222	M.RESISTOR CH 1/10W 2.2K	1	
R209	ERJ6GEYG223	M.RESISTOR CH 1/10W 22K	1	
R210	ERJ6GEYG222	M.RESISTOR CH 1/10W 2.2K	1	
R211	ERJ6GEYG223	M.RESISTOR CH 1/10W 22K	1	
R212,13	ERJ6GEYG222	M.RESISTOR CH 1/10W 2.2K	2	
R214	ERJ6GEYG471	M.RESISTOR CH 1/10W 470	1	
R215,16	ERJ6GEYF561	M.RESISTOR CH 1/10W 560	2	
R217,18	ERJ6GEYG102	M.RESISTOR CH 1/10W 1K	2	
R219	ERJ6GEYG101	M.RESISTOR CH 1/10W 100	1	
R220-22	ERJ6GEY0R00	M.RESISTOR CH 1/10W 0	3	
R223	ERJ6GEYG103	M.RESISTOR CH 1/10W 10K	1	
R232	ERJ6GEY0R00	M.RESISTOR CH 1/10W 0	1	

Ref.No.	Part No.	Part Name & Description	Pcs	Remarks
R234	ERJ6GEYG103	M.RESISTOR CH 1/10W 10K	1	
R235-43	ERJ6GEYG562	M.RESISTOR CH 1/10W 5.6K	9	
R244	ERJ6GEYG101	M.RESISTOR CH 1/10W 100	1	
R245	ERJ6GEYG103	M.RESISTOR CH 1/10W 10K	1	
R246	ERJ6GEYG102	M.RESISTOR CH 1/10W 1K	1	
R247	ERJ6GEY0R00	M.RESISTOR CH 1/10W 0	1	
R248-51	ERJ6GEYG562	M.RESISTOR CH 1/10W 5.6K	4	
R252	ERJ6GEYG104	M.RESISTOR CH 1/10W 100K	1	
R253	ERJ6GEYJ301	M.RESISTOR CH 1/10W 300	1	
R254	ERJ6GEYF473	M.RESISTOR CH 1/10W 47K	1	
R255	ERJ6GEY0R00	M.RESISTOR CH 1/10W 0	1	
R257	ERJ6GEYG562	M.RESISTOR CH 1/10W 5.6K	1	
R259,60	ERJ6GEY0R00	M.RESISTOR CH 1/10W 0	2	
R261	ERJ6GEYG101	M.RESISTOR CH 1/10W 100	1	
R262	ERJ6GEYF473	M.RESISTOR CH 1/10W 47K	1	
R263,64	ERJ6GEYG101	M.RESISTOR CH 1/10W 100	2	
R265	ERJ6GEYF473	M.RESISTOR CH 1/10W 47K	1	
R266	ERJ6GEYG152	M.RESISTOR CH 1/10W 1.5K	1	
R267-69	ERJ6GEYG101	M.RESISTOR CH 1/10W 100	3	
R270,71	ERJ6GEY0R00	M.RESISTOR CH 1/10W 0	2	
R275-78	ERJ6GEY0R00	M.RESISTOR CH 1/10W 0	4	
R280	ERJ6GEY0R00	M.RESISTOR CH 1/10W 0	1	
R281,82	ERJ6GEYG471	M.RESISTOR CH 1/10W 470	2	
R283-85	ERJ6GEYG101	M.RESISTOR CH 1/10W 100	3	
R286,87	ERJ6GEY0R00	M.RESISTOR CH 1/10W 0	2	
R300	ERJ6GEYG104	M.RESISTOR CH 1/10W 100K	1	
R301	ERJ6GEYG102	M.RESISTOR CH 1/10W 1K	1	
R303,04	ERJ6GEY0R00	M.RESISTOR CH 1/10W 0	2	
R305-13	ERJ6GEYG103	M.RESISTOR CH 1/10W 10K	9	
R314-16	ERJ6GEYG821	M.RESISTOR CH 1/10W 820	3	
R318,19	ERJ6GEYG101	M.RESISTOR CH 1/10W 100	2	
R320	ERJ6GEYG222	M.RESISTOR CH 1/10W 2.2K	1	
R321	ERJ6GEYG332	M.RESISTOR CH 1/10W 3.3K	1	
R322-24	ERJ6GEYG222	M.RESISTOR CH 1/10W 2.2K	3	
R325	ERJ6GEYG682	M.REISITOR CH 1/10W 6.8K	1	
R326	ERJ6GEYG102	M.RESISTOR CH 1/10W 1K	1	
R327-29	ERJ6GEYG332	M.RESISTOR CH 1/10W 3.3K	3	
R330	ERJ6GEYG104	M.RESISTOR CH 1/10W 100K	1	
R331	ERJ6GEYG221	M.RESISTOR CH 1/10W 220	1	
R332	ERJ6GEYG102	M.RESISTOR CH 1/10W 1K	1	
R333	ERJ6GEYF473	M.RESISTOR CH 1/10W 47K	1	
R334	ERJ6GEYG331	M.RESISTOR CH 1/10W 330	1	
R336,37	ERJ6GEYF472	M.RESISTOR CH 1/10W 4.7K	2	
R338,39	ERJ6GEYG101	M.RESISTOR CH 1/10W 100	2	
R340	ERJ6GEYG331	M.RESISTOR CH 1/10W 330	1	
R341	ERJ6GEYG471	M.RESISTOR CH 1/10W 470	1	
R342	ERJ6GEYG153	M.RESISTOR CH 1/10W 15K	1	
R343	ERJ6GEYG474	M.RESISTOR CH 1/10W 470K	1	
R344	ERJ6GEYG122	M.RESISTOR CH 1/10W 1.2K	1	
R345	ERJ6GEYG394	M.RESISTOR CH 1/10W 390K	1	
R346	ERJ6GEYG102	M.RESISTOR CH 1/10W 1K	1	
R347	ERJ6GEYG563	M.RESISTOR CH 1/10W 56K	1	
R348	ERJ6GEYG103	M.RESISTOR CH 1/10W 10K	1	
R349	ERJ6GEYF473	M.RESISTOR CH 1/10W 47K	1	
R350	ERJ6GEYG183	M.RESISTOR CH 1/10W 18K	1	
R351-53	ERJ6GEYG103	M.RESISTOR CH 1/10W 10K	3	
R354	ERJ6GEYG104	M.RESISTOR CH 1/10W 100K	1	
R355	ERJ6GEYG103	M.RESISTOR CH 1/10W 10K	1	
R356	ERJ6GEYG104	M.RESISTOR CH 1/10W 100K	1	
R357	ERJ6GEYG103	M.RESISTOR CH 1/10W 10K	1	
R358	ERJ6GEYG394	M.RESISTOR CH 1/10W 390K	1	
R359	ERJ6GEYG102	M.RESISTOR CH 1/10W 1K	1	
R360	ERJ6GEYG183	M.RESISTOR CH 1/10W 18K	1	
R361	ERJ6GEYF473	M.RESISTOR CH 1/10W 47K	1	
R362,63	ERJ6GEYG104	M.RESISTOR CH 1/10W 100K	2	
R364	ERJ6GEYG183	M.RESISTOR CH 1/10W 18K	1	
R365	ERJ6GEYG474	M.RESISTOR CH 1/10W 470K	1	
R366	ERJ6GEYG153	M.RESISTOR CH 1/10W 15K	1	
R367	ERJ6GEYG103	M.RESISTOR CH 1/10W 10K	1	
R368	ERJ6GEYG102	M.RESISTOR CH 1/10W 1K	1	
R369	ERJ6GEYG331	M.RESISTOR CH 1/10W 330	1	
R370	ERJ6GEYG103	M.RESISTOR CH 1/10W 10K	1	
R371	ERJ6GEYG563	M.RESISTOR CH 1/10W 56K	1	
R372	ERJ6GEYG471	M.RESISTOR CH 1/10W 470	1	
R373	ERJ6GEYG122	M.RESISTOR CH 1/10W 1.2K	1	

Ref.No.	Part No.	Part Name & Description	Pcs	Remarks
R374,75	ERJ6GEY0R00	M.RESISTOR CH 1/10W 0	2	
R380	ERJ6GEYG102	M.RESISTOR CH 1/10W 1K	1	
R381	ERJ6GEYG681	M.RESISTOR CH 1/10W 680	1	
R382	ERJ6GEYG471	M.RESISTOR CH 1/10W 470	1	
R383	ERJ6GEYG102	M.RESISTOR CH 1/10W 1K	1	
R384	ERJ6GEYG681	M.RESISTOR CH 1/10W 680	1	
R385	ERJ6GEYG471	M.RESISTOR CH 1/10W 470	1	
R400,01	ERJ6GEYG471	M.RESISTOR CH 1/10W 470	2	
R402	ERJ6RBD333	M.RESISTOR CH 1/10W 33K	1	
R403	ERJ6RBD222	M.RESISTOR CH 1/10W 2.2K	1	
R404,05	ERJ12YJR68	M.RESISTOR CH 1/2W 0.68	2	
R406,07	ERJ6GEYG474	M.RESISTOR CH 1/10W 470K	2	
R408	ERJ6GEYG222	M.RESISTOR CH 1/10W 2.2K	1	
R409	ERJ6GEYG154	M.RESISTOR CH 1/10W 150K	1	
R410	ERJ6GEYG272	M.RESISTOR CH 1/10W 2.7K	1	
R411	ERJ6GEYJ274	M.RESISTOR CH 1/10W 270K	1	
R412	ERJ6GEYG272	M.RESISTOR CH 1/10W 2.7K	1	
R413	ERJ6GEYG273	M.RESISTOR CH 1/10W 27K	1	
R414,15	ERJ6GEYG223	M.RESISTOR CH 1/10W 22K	2	
R416	ERJ6GEYG122	M.RESISTOR CH 1/10W 1.2K	1	
R417	ERJ6GEYG224	M.RESISTOR CH 1/10W 220K	1	
R418	ERJ6GEYG272	M.RESISTOR CH 1/10W 2.7K	1	
R419	ERJ6GEYG223	M.RESISTOR CH 1/10W 22K	1	
R420	ERJ6GEYF472	M.RESISTOR CH 1/10W 4.7K	1	
R421	ERJ6GEYJ274	M.RESISTOR CH 1/10W 270K	1	
R422	ERJ6GEYG272	M.RESISTOR CH 1/10W 2.7K	1	
R423	ERJ6GEY0R00	M.RESISTOR CH 1/10W 0	1	
R424,25	ERJ6GEYG223	M.RESISTOR CH 1/10W 22K	2	
R426	ERJ6RBD333	M.RESISTOR CH 1/10W 33K	1	
R427	ERJ6RBD222	M.RESISTOR CH 1/10W 2.2K	1	
R428,29	ERJ6GEYG471	M.RESISTOR CH 1/10W 470	2	
R430,31	ERJ12YJR68	M.RESISTOR CH 1/2W 0.68	2	
R432,33	ERJ6GEYF473	M.RESISTOR CH 1/10W 47K	2	
R436,37	ERJ6GEY0R00	M.RESISTOR CH 1/10W 0	2	
R450	ERJ6RBD472	M.RESISTOR CH 1/10W 4.7K	1	
R451	ERJ6RBD122	M.RESISTOR CH 1/10W 1.2K	1	
R452	ERJ6GEYG102	M.RESISTOR CH 1/10W 1K	1	
R453-55	ERJ6GEYG330	M.RESISTOR CH 1/10W 33	3	
R456,57	ERJ12YJ2R2	M.RESISTOR CH 1/2W 2.2	2	
R458	ERJ6GEYF393	M.RESISTOR CH 1/10W 39K	1	
R459	ERJ6GEYF123	M.RESISTOR CH 1/10W 12K	1	
R460	ERJ6GEYG271	M.RESISTOR CH 1/10W 270	1	
R461	ERJ6RBD472	M.RESISTOR CH 1/10W 4.7K	1	
R462	ERJ6RBD122	M.RESISTOR CH 1/10W 1.2K	1	
R463	ERJ6GEYG102	M.RESISTOR CH 1/10W 1K	1	
R464,65	ERJ6GEYG330	M.RESISTOR CH 1/10W 33	2	
R466,67	ERJ12YJ2R2	M.RESISTOR CH 1/2W 2.2	2	
R468	ERJ6GEYF393	M.RESISTOR CH 1/10W 39K	1	
R469	ERJ6GEYF123	M.RESISTOR CH 1/10W 12K	1	
R470	ERJ6GEYG271	M.RESISTOR CH 1/10W 270	1	
R471	ERJ6GEYG330	M.RESISTOR CH 1/10W 33	1	
R510	ERJ6GEYF561	M.RESISTOR CH 1/10W 560	1	
R511,12	ERJ6RBD391	M.RESISTOR CH 1/10W 390	2	
R513	ERJ6GEYF561	M.RESISTOR CH 1/10W 560	1	
R514-17	ERJ6RBD391	M.RESISTOR CH 1/10W 390	4	
R550-59	ERJ6GEY0R00	M.RESISTOR CH 1/10W 0	10	
R600-02	ERJ6GEY0R00	M.RESISTOR CH 1/10W 0	3	
R603-06	ERJ6GEYG101	M.RESISTOR CH 1/10W 100	4	
R607	ERJ6GEY0R00	M.RESISTOR CH 1/10W 0	1	
R609	ERJ6GEY0R00	M.RESISTOR CH 1/10W 0	1	
R621	ERJ6GEYG153	M.RESISTOR CH 1/10W 15K	1	
R622-27	ERJ6GEYG103	M.RESISTOR CH 1/10W 10K	6	
R628	ERJ6GEYG102	M.RESISTOR CH 1/10W 1K	1	
R629,30	ERJ6GEY0R00	M.RESISTOR CH 1/10W 0	2	
R631,32	ERJ6GEYG103	M.RESISTOR CH 1/10W 10K	2	
R640	ERJ6GEYG103	M.RESISTOR CH 1/10W 10K	1	
R650,51	ERJ6GEYG562	M.RESISTOR CH 1/10W 5.6K	2	
R652	ERJ6RBD682	M.RESISTOR CH 1/10W 6.8K	1	
R653	ERJ6RBD102	M.RESISTOR CH 1/10W 1K	1	
R654	ERJ6GEYG103	M.RESISTOR CH 1/10W 10K	1	
R655	ERJ6GEYG332	M.RESISTOR CH 1/10W 3.3K	1	
R656	ERJ6GEYG101	M.RESISTOR CH 1/10W 100	1	
R736	ERJ6GEY0R00	M.RESISTOR CH 1/10W 0	1	
R751	ERJ6GEY0R00	M.RESISTOR CH 1/10W 0	1	
R762	ERJ6GEY0R00	M.RESISTOR CH 1/10W 0	1	

Ref.No.	Part No.	Part Name & Description	Pcs	Remarks
R765,66	ERJ6GEY0R00	M.RESISTOR CH 1/10W 0	2	
R769	ERJ6GEY0R00	M.RESISTOR CH 1/10W 0	1	
R777	ERJ6GEY0R00	M.RESISTOR CH 1/10W 0	1	
TG510,11	VJR0646	TEST POINT	2	
TP1	VJR0646	TEST POINT	1	
TP2	EYF6CU	TEST POINT	1	
TP30,31	VJR0646	TEST POINT	2	
TP32,33	EYF6CU	TEST POINT	2	
TP34,35	VJR0646	TEST POINT	2	
TP60	VJR0646	TEST POINT	1	
TP80-83	VJR0646	TEST POINT	4	
TP120-23	VJR0646	TEST POINT	4	
TP160-63	VJR0646	TEST POINT	4	
TP200	EYF6CU	TEST POINT	1	
TP201	VJR0646	TEST POINT	1	
TP202	EYF6CU	TEST POINT	1	
TP230-34	VJR0646	TEST POINT	5	
TP280	VJR0646	TEST POINT	1	
TP300-02	VJR0646	TEST POINT	3	
TP320,21	VJR0646	TEST POINT	2	
TP400,01	VJR0646	TEST POINT	2	
TP450,51	VJR0646	TEST POINT	2	
X230	VSX0918	CRYSTAL OSCILLATOR	1	
X320	VSX0645	CRYSTAL OSCILLATOR	1	
		MISCELLANEOUS		
	VML2143	CARD PULLER	1	
	VML2144	CARD PULLER	1	
■E3	VEP86267A	F2 SYSCON P.C.BOARD	1	(RTL)FOR AJ-D850P
■E3	VEP86267B	F2 SYSCON P.C.BOARD	1	(RTL)FOR AJ-D850E
C1	ECUM1E104ZFN	C.CAPACITOR CH 25V 0.1U	1	
C9	ECUM1E104ZFN	C.CAPACITOR CH 25V 0.1U	1	
C10,11	ECUM1H150JCN	C.CAPACITOR CH 50V 15P	2	
C12	ECUM1E104ZFN	C.CAPACITOR CH 25V 0.1U	1	
C13	ECQB1H104JF	P.CAPACITOR 50V 0.1U	1	
C14	ECEV1EN4R7Q	E.CAPACITOR CH 25V 4.7U	1	
C15	ECUM1E104ZFN	C.CAPACITOR CH 25V 0.1U	1	
C16-26	ECUM1H103KBN	C.CAPACITOR CH 50V 0.01U	11	
C27-29	ECUM1E104ZFN	C.CAPACITOR CH 25V 0.1U	3	
C30	ECUM1H103KBN	C.CAPACITOR CH 50V 0.01U	1	
C32-34	ECUM1H103KBN	C.CAPACITOR CH 50V 0.01U	3	
C35	ECUM1H470JCN	C.CAPACITOR CH 50V 47P	1	
C36,37	ECUM1E104ZFN	C.CAPACITOR CH 25V 0.1U	2	
C38	ECUM1H103KBN	C.CAPACITOR CH 50V 0.01U	1	
C46	ECUM1H103KBN	C.CAPACITOR CH 50V 0.01U	1	
C47	ECUM1E104ZFN	C.CAPACITOR CH 25V 0.1U	1	
C49	ECUX1C105ZFN	C.CAPACITOR CH 16V 1U	1	
C51	ECUX1C105ZFN	C.CAPACITOR CH 16V 1U	1	
C53	ECUX1C105ZFN	C.CAPACITOR CH 16V 1U	1	
C55	ECUX1C105ZFN	C.CAPACITOR CH 16V 1U	1	
C56-58	ECUM1H103KBN	C.CAPACITOR CH 50V 0.01U	3	
C59,60	ECEV1CV470Q	E.CAPACITOR CH 16V 47U	2	
C65	ECEV1CV470Q	E.CAPACITOR CH 16V 47U	1	
C66	ECA1CHG682	E.CAPACITOR 16V 6800U	1	
C67	ECUM1E104ZFN	C.CAPACITOR CH 25V 0.1U	1	
C68,69	ECUX1E104KBN	C.CAPACITOR CH 25V 0.1U	2	
C70,71	ECUM1H103KBN	C.CAPACITOR CH 50V 0.01U	2	
C72	ECEV1CV100Q	E.CAPACITOR CH 16V 10U	1	
C73	ECUM1E104ZFN	C.CAPACITOR CH 25V 0.1U	1	
C74	ECEV1CV470Q	E.CAPACITOR CH 16V 47U	1	
C76	ECA1CHG682	E.CAPACITOR 16V 6800U	1	
C77,78	ECUM1H103KBN	C.CAPACITOR CH 50V 0.01U	2	
C79	ECUX1C105ZFN	C.CAPACITOR CH 16V 1U	1	
C81	ECUX1C105ZFN	C.CAPACITOR CH 16V 1U	1	
C83	ECUM1E104ZFN	C.CAPACITOR CH 25V 0.1U	1	
C86,87	ECUM1H103KBN	C.CAPACITOR CH 50V 0.01U	2	
C88-90	ECUM1E104ZFN	C.CAPACITOR CH 25V 0.1U	3	

Ref.No.	Part No.	Part Name & Description	Pcs	Remarks
C91	ECUX1E105KBP	C.CAPACITOR CH 25V 1U	1	
C92	ECUX1C106KBP	C.CAPACITOR CH 16V 10U	1	
C93	ECEV1CV100Q	E.CAPACITOR CH 16V 10U	1	
C94-96	ECEV1CV470Q	E.CAPACITOR CH 16V 47U	3	
C97	ECUM1E104ZFN	C.CAPACITOR CH 25V 0.1U	1	
C98	ECUM1H103KBN	C.CAPACITOR CH 50V 0.01U	1	
C99	ECUM1E104ZFN	C.CAPACITOR CH 25V 0.1U	1	
C100	ECUM1H221JCN	C.CAPACITOR CH 50V 220P	1	
C101	ECEV1CV470Q	E.CAPACITOR CH 16V 47U	1	
C500,01	ECUM1H120JCN	C.CAPACITOR CH 50V 12P	2	
C502	ECUM1H103KBN	C.CAPACITOR CH 50V 0.01U	1	
C503-06	ECUM1E104ZFN	C.CAPACITOR CH 25V 0.1U	4	
C508-13	ECUM1H103KBN	C.CAPACITOR CH 50V 0.01U	6	
C514-19	ECUM1E104ZFN	C.CAPACITOR CH 25V 0.1U	6	
C520-22	ECUM1H103KBN	C.CAPACITOR CH 50V 0.01U	3	
C523	ECUM1H331JCN	C.CAPACITOR CH 50V 330P	1	
C524	ECUM1E104ZFN	C.CAPACITOR CH 25V 0.1U	1	
C525	ECUM1H103KBN	C.CAPACITOR CH 50V 0.01U	1	
C526,27	ECUX1H102JCN	C.CAPACITOR CH 50V 1000P	2	
C528-35	ECUM1H103KBN	C.CAPACITOR CH 50V 0.01U	8	
C536	ECEV1CV100Q	E.CAPACITOR CH 16V 10U	1	
C537,38	ECUM1E104ZFN	C.CAPACITOR CH 25V 0.1U	2	
C543-45	ECUM1H103KBN	C.CAPACITOR CH 50V 0.01U	3	
C547	ECUM1H103KBN	C.CAPACITOR CH 50V 0.01U	1	
C548	ECUM1E104ZFN	C.CAPACITOR CH 25V 0.1U	1	
C549,50	ECUM1H103KBN	C.CAPACITOR CH 50V 0.01U	2	
C551,52	ECUM1E104ZFN	C.CAPACITOR CH 25V 0.1U	2	
C703-13	ECUM1E104ZFN	C.CAPACITOR CH 25V 0.1U	11	
C714	ECUM1H103KBN	C.CAPACITOR CH 50V 0.01U	1	
C715,16	ECUM1H100DCN	C.CAPACITOR CH 50V 10P	2	
C717-21	ECUM1E104ZFN	C.CAPACITOR CH 25V 0.1U	5	
C722,23	ECUM1H050CCN	C.CAPACITOR CH 50V 5P	2	
C724,25	ECUM1E104ZFN	C.CAPACITOR CH 25V 0.1U	2	
C726	ECUM1H120JCN	C.CAPACITOR CH 50V 12P	1	
C727	ECUM1H150JCN	C.CAPACITOR CH 50V 15P	1	
C728	ECEV0JV470Q	E.CAPACITOR CH6.3V 47U	1	
C729	ECUX1H102JCN	C.CAPACITOR CH 50V 1000P	1	
C730	ECUX1H682KBN	C.CAPACITOR CH 50V 6800P	1	
C731	ECEV1CV100Q	E.CAPACITOR CH 16V 10U	1	
C732	ECUM1H103KBN	C.CAPACITOR CH 50V 0.01U	1	
C733,34	ECEV1EN4R7Q	E.CAPACITOR CH 25V 4.7U	2	
C735	ECUM1H103KBN	C.CAPACITOR CH 50V 0.01U	1	
C736	ECA1CAXN330	E.CAPACITOR 16V 33U	1	
C737	ECUM1H103KBN	C.CAPACITOR CH 50V 0.01U	1	
C738	ECA1CAXN330	E.CAPACITOR 16V 33U	1	
C739,40	ECUM1H103KBN	C.CAPACITOR CH 50V 0.01U	2	
C741	ECEV1EN4R7Q	E.CAPACITOR CH 25V 4.7U	1	
C742	ECUM1H120JCN	C.CAPACITOR CH 50V 12P	1	
C743	ECEV1CV100Q	E.CAPACITOR CH 16V 10U	1	
C744,45	ECEV1EN4R7Q	E.CAPACITOR CH 25V 4.7U	2	
C746	ECUM1H103KBN	C.CAPACITOR CH 50V 0.01U	1	
C747-61	ECUM1E104ZFN	C.CAPACITOR CH 25V 0.1U	15	
C762	ECEV1CV470Q	E.CAPACITOR CH 16V 47U	1	
C763	ECUM1E104ZFN	C.CAPACITOR CH 25V 0.1U	1	
C764	ECEV1CV470Q	E.CAPACITOR CH 16V 47U	1	
C765	ECUM1E104ZFN	C.CAPACITOR CH 25V 0.1U	1	
C766	ECEV1CV470Q	E.CAPACITOR CH 16V 47U	1	
C767	ECUM1H103KBN	C.CAPACITOR CH 50V 0.01U	1	
C768	ECEV1CV470Q	E.CAPACITOR CH 16V 47U	1	
C769	ECUM1H103KBN	C.CAPACITOR CH 50V 0.01U	1	
C770	ECUX1H561JCN	C.CAPACITOR CH 50V 560P	1	
C771	ECUM1H821JCN	C.CAPACITOR CH 50V 820P	1	
C772,73	ECUM1H103KBN	C.CAPACITOR CH 50V 0.01U	2	
C774	ECEV1EN4R7Q	E.CAPACITOR CH 25V 4.7U	1	
C775	ECUM1E104ZFN	C.CAPACITOR CH 25V 0.1U	1	
C776	ECUM1H103KBN	C.CAPACITOR CH 50V 0.01U	1	
C777-80	ECUM1E104ZFN	C.CAPACITOR CH 25V 0.1U	4	
C781,82	ECUM1H103KBN	C.CAPACITOR CH 50V 0.01U	2	
C783	ECUM1E104ZFN	C.CAPACITOR CH 25V 0.1U	1	
C784	ECUM1H103KBN	C.CAPACITOR CH 50V 0.01U	1	
C785	ECUM1E104ZFN	C.CAPACITOR CH 25V 0.1U	1	
C800-03	ECUM1H103KBN	C.CAPACITOR CH 50V 0.01U	4	
C804-09	ECUM1E104ZFN	C.CAPACITOR CH 25V 0.1U	6	
C900,01	ECEV1CV470Q	E.CAPACITOR CH 16V 47U	2	
C902,03	ECUM1E104ZFN	C.CAPACITOR CH 25V 0.1U	2	

Ref.No.	Part No.	Part Name & Description	Pcs	Remarks
C904-07	ECEV1CV470Q	E.CAPACITOR CH 16V 47U	4	
D1	MA157	DIODE	1	
D2-D5	MA715	DIODE	4	
D8	MA152WK	DIODE	1	
D9	MA3068-H	DIODE	1	
D10	MA3051-H	DIODE	1	
D11	MA3047-M	DIODE	1	
D12	MA3100-M	DIODE	1	
D13	MA3051-H	DIODE	1	
D14	MA3075-M	DIODE	1	
D15	21DQ04	DIODE	1	
D16	MA3051-H	DIODE	1	
D17	MA157	DIODE	1	
D18-22	MA152WK	DIODE	5	
D25-27	MA152WK	DIODE	3	
D28-43	MA738	DIODE	16	
D44	MA152WK	DIODE	1	
D45-48	NSQ03A04	DIODE	4	
D49,50	SN74S1051NS	IC	2	
D51	MA3062-L	DIODE	1	
D52	MA3082M	DIODE	1	
D53	MA3030-H	DIODE	1	
D54	MA738	DIODE	1	
D55	MA152WK	DIODE	1	
D500	MA152WK	DIODE	1	
D503	MA152WK	DIODE	1	
D504,05	MA715	DIODE	2	
D506	MA152WK	DIODE	1	
D507	MA715	DIODE	1	
D701-06	MA715	DIODE	6	
D709	MA715	DIODE	1	
D711-14	MA157	DIODE	4	
D715	MA152WK	DIODE	1	
D716-19	MA715	DIODE	4	
D720-22	SN74S1051NS	IC	3	
D723,24	MA715	DIODE	2	
FL701,02	VLF0576	FILTER	2	
FL900-03	VLF0576	FILTER	4	
IC1	M37702S4AFP	IC	1	
IC2	VSI2673A	IC	1	FOR VEP86267A
IC2	VSI2676	IC	1	FOR VEP86267B
IC3	74F573SJ	IC	1	
IC4	74F138SJ	IC	1	
IC5	74F573SJ	IC	1	
IC6	TL7705CPSB	IC	1	
IC7	MC74HC132AF	IC	1	
IC8	MC74HC04AF	IC	1	
IC9,10	74AC32SJ	IC	2	
IC11,12	74F32SJ	IC	2	
IC13	MC74HC74AF	IC	1	
IC14	74F11SJ	IC	1	
IC15	IDT71321A55	IC	1	
IC16	74F245SJ	IC	1	
IC17	STK14C88N45	IC	1	
IC19,20	74F541SJ	IC	2	
IC23	74F245SJ	IC	1	
IC24	UPD6456T611Y	IC	1	
IC26	TE7751	IC	1	
IC27,28	M54649L	IC	2	
IC29	NJM2901M	IC	1	
IC30	NJM2904M	IC	1	
IC31,32	MC14538BF	IC	2	
IC33	74F32SJ	IC	1	
IC34	74F00SJ	IC	1	
IC35	NJM2901M	IC	1	
IC36,37	TC7S14F	IC	2	
IC38	MC14538BF	IC	1	
IC39	NJM2904M	IC	1	
IC500	HD64180ZRP10	IC	1	
IC501,02	MC74HC541AF	IC	2	
IC503	VSI2674A	IC	1	FOR VEP86267A
IC504	K6256DLG7L	IC	1	

Ref.No.	Part No.	Part Name & Description	Pcs	Remarks
IC503	VSI2677	IC	1	FOR VEP86267B
IC505	IDT71321A55	IC	1	
IC506	MC74HC138AF	IC	1	
IC507	74F32SJ	IC	1	
IC508	MC74HC00AF	IC	1	
IC509	T74HC191AF	IC	1	
IC510	Z84C4310FEC	IC	1	
IC511,12	MC74HC126AF	IC	2	
IC513,14	SN75C1168NS	IC	2	
IC515	MC1488M	IC	1	
IC516	MC1489AM	IC	1	
IC517	MC14024BF	IC	1	
IC518	TE7751	IC	1	
IC519,20	MC14021BF	IC	2	
IC521,22	MC14094BF	IC	2	
IC523	MC74HC04AF	IC	1	
IC524	MC14050BF	IC	1	
IC525	SN74LS38NS	IC	1	
IC527	TE7751	IC	1	
IC528,29	MC14021BF	IC	2	
IC530,31	T74HC191AF	IC	2	
IC532	MC74HC574AF	IC	1	
IC701	M37702S4AFP	IC	1	
IC702	VSI2675	IC	1	FOR VEP86267A
IC702	VSI2678	IC	1	FOR VEP86267B
IC703	K6256DLG7L	IC	1	
IC704	74F573SJ	IC	1	
IC705,06	74F138SJ	IC	2	
IC707,08	74F32SJ	IC	2	
IC709	74F00SJ	IC	1	
IC710	MN51040VPI	IC	1	
IC711	MC74HC574AF	IC	1	
IC712	74AC32SJ	IC	1	
IC713	74F32SJ	IC	1	
IC714,15	74F541SJ	IC	2	
IC716	74F245SJ	IC	1	
IC717	74F541SJ	IC	1	
IC718	MC14053BF	IC	1	
IC719	NJM4560MD	IC	1	
IC720	NJM2068MD	IC	1	
IC721	UPC319G2	IC	1	
IC722	UPC4741G2	IC	1	
IC723	NJM78L09UA	IC	1	
IC724	NJM79L09UA	IC	1	
IC725,26	NJM084M	IC	2	
IC728,29	74F74SJ	IC	2	
IC730	74F32SJ	IC	1	
IC731	74F245SJ	IC	1	
IC732	74F08SJ	IC	1	
IC733	NJM084M	IC	1	
IC734	74F32SJ	IC	1	
IS2	VJS2336A032	CONNECTOR (FEMALE)	1	
IS503	VJS2336A032	CONNECTOR (FEMALE)	1	
IS702	VJS2336A032	CONNECTOR (FEMALE)	1	
L1	VLQ0163J270	COIL 27UH	1	
L2	VLQ0319K470	COIL 47UH	1	
L500-03	VLQ0576	COIL	4	
L701	VLQ0163J470	COIL 47UH	1	
L900-03	VLP0133	COIL	4	
LED1-D4	LN1251CAL	DIODE	4	
P1,P2	VJP3454B096	CONNECTOR (MALE)	2	
Q3	2SB710A-R	TRANSISTOR	1	
Q4	2SB936A-Q	TRANSISTOR	1	
Q5,Q6	2SD601A-R	TRANSISTOR	2	
Q7,Q8	2SB1073-R	TRANSISTOR	2	
Q9	2SD601A-R	TRANSISTOR	1	
Q10	2SB709A-R	TRANSISTOR	1	
Q11,12	2SD1119-R	TRANSISTOR	2	
Q13	2SB709A-R	TRANSISTOR	1	
Q14	2SD601A-R	TRANSISTOR	1	

Ref.No.	Part No.	Part Name & Description	Pcs	Remarks
Q15,16	2SB1073-R	TRANSISTOR	2	
Q17	2SD601A-R	TRANSISTOR	1	
Q18	2SB709A-R	TRANSISTOR	1	
Q19,20	2SD1119-R	TRANSISTOR	2	
Q21	2SB709A-R	TRANSISTOR	1	
Q22	2SD601A-R	TRANSISTOR	1	
Q23,24	2SB1175	TRANSISTOR	2	
Q25	2SD601A-R	TRANSISTOR	1	
Q26	2SB709A-R	TRANSISTOR	1	
Q27,28	2SD1747PQY	TRANSISTOR	2	
Q29	2SB709A-R	TRANSISTOR	1	
Q30	2SD601A-R	TRANSISTOR	1	
Q31,32	2SB1073-R	TRANSISTOR	2	
Q33	2SD601A-R	TRANSISTOR	1	
Q34	2SB709A-R	TRANSISTOR	1	
Q35,36	2SD1119-R	TRANSISTOR	2	
Q37	2SB709A-R	TRANSISTOR	1	
Q38	2SD601A-R	TRANSISTOR	1	
Q39	2SB936A-Q	TRANSISTOR	1	
Q701-03	2SD601A-R	TRANSISTOR	3	
Q704,05	2SB709A-R	TRANSISTOR	2	
QR3-10	UN2213	TRANSISTOR-RESISTOR	8	
QR11-16	UN2214	TRANSISTOR-RESISTOR	6	
QR17	UN2213	TRANSISTOR-RESISTOR	1	
QR18-26	UN2214	TRANSISTOR-RESISTOR	9	
QR27,28	UN2113	TRANSISTOR-RESISTOR	2	
QR29,30	UN2214	TRANSISTOR-RESISTOR	2	
QR31,32	UN2113	TRANSISTOR-RESISTOR	2	
QR33,34	UN2214	TRANSISTOR-RESISTOR	2	
QR35,36	UN2113	TRANSISTOR-RESISTOR	2	
QR37,38	UN2213	TRANSISTOR-RESISTOR	2	
QR39,40	UN2113	TRANSISTOR-RESISTOR	2	
QR41	UN2213	TRANSISTOR-RESISTOR	1	
QR43	UN2213	TRANSISTOR-RESISTOR	1	
QR44	UN2214	TRANSISTOR-RESISTOR	1	
QR701-03	UN221L	TRANSITOR-RESISTOR	3	
QR704,05	UN2214	TRANSISTOR-RESISTOR	2	
R1-R5	ERJ6GEYF473	M.RESISTOR CH 1/10W 47K	5	
R6-10	ERJ6GEYG103	M.RESISTOR CH 1/10W 10K	5	
R11,12	ERJ6GEYF822	M.RESISTOR CH 1/10W 8.2K	2	
R13,14	ERJ6GEYG103	M.RESISTOR CH 1/10W 10K	2	
R16	ERJ6GEYF473	M.RESISTOR CH 1/10W 47K	1	
R17	ERJ6GEYG394	M.RESISTOR CH 1/10W 390K	1	
R18,19	ERJ6GEYG102	M.RESISTOR CH 1/10W 1K	2	
R20	ERJ6GEYG103	M.RESISTOR CH 1/10W 10K	1	
R21,22	ERJ6GEYF473	M.RESISTOR CH 1/10W 47K	2	
R23,24	ERJ6GEYG103	M.RESISTOR CH 1/10W 10K	2	
R25,26	ERJ6GEYG102	M.RESISTOR CH 1/10W 1K	2	
R27,28	ERJ6GEYF473	M.RESISTOR CH 1/10W 47K	2	
R29	ERJ6GEYG103	M.RESISTOR CH 1/10W 10K	1	
R33-35	ERJ6GEYG103	M.RESISTOR CH 1/10W 10K	3	
R38,39	ERJ6GEYF473	M.RESISTOR CH 1/10W 47K	2	
R43	ERJ6GEYG271	M.RESISTOR CH 1/10W 270	1	
R44	ERJ6GEYF473	M.RESISTOR CH 1/10W 47K	1	
R45	ERJ6GEYG103	M.RESISTOR CH 1/10W 10K	1	
R46	ERJ6GEYF473	M.RESISTOR CH 1/10W 47K	1	
R47	ERJ6GEYG103	M.RESISTOR CH 1/10W 10K	1	
R48	ERJ6GEYG562	M.RESISTOR CH 1/10W 5.6K	1	
R49	ERJ6GEYG222	M.RESISTOR CH 1/10W 2.2K	1	
R54,55	ERJ6GEYF473	M.RESISTOR CH 1/10W 47K	2	
R56	ERJ6GEYG105	M.RESISTOR CH 1/10W 1M	1	
R57	ERJ6GEYG102	M.RESISTOR CH 1/10W 1K	1	
R58-61	ERJ6GEYG222	M.RESISTOR CH 1/10W 2.2K	4	
R62	ERJ6GEYG103	M.RESISTOR CH 1/10W 10K	1	
R63-70	ERJ6GEYF472	M.RESISTOR CH 1/10W 4.7K	8	
R71,72	ERJ6GEYF473	M.RESISTOR CH 1/10W 47K	2	
R73,74	ERJ6GEYG102	M.RESISTOR CH 1/10W 1K	2	
R75	ERJ6GEYG222	M.RESISTOR CH 1/10W 2.2K	1	
R76,77	ERJ6GEYG101	M.RESISTOR CH 1/10W 100	2	
R82	ERJ6GEYG104	M.RESISTOR CH 1/10W 100K	1	
R83	ERJ6GEYF473	M.RESISTOR CH 1/10W 47K	1	
R84-87	ERJ6GEYG104	M.RESISTOR CH 1/10W 100K	4	
R88	ERJ6GEYG104	M.RESISTOR CH 1/10W 100K	1	FOR VEP86267A

Ref.No.	Part No.	Part Name & Description	Pcs	Remarks
R89	ERJ6GEYG104	M.RESISTOR CH 1/10W 100K	1	FOR VEP86267B
R90-95	ERJ6GEYG103	M.RESISTOR CH 1/10W 10K	6	
R96	ERJ6GEYF473	M.RESISTOR CH 1/10W 47K	1	
R97	ERJ6GEYG105	M.RESISTOR CH 1/10W 1M	1	
R100	ERJ6GEYG103	M.RESISTOR CH 1/10W 10K	1	
R101,02	ERJ6GEYF473	M.RESISTOR CH 1/10W 47K	2	
R103,04	ERJ6GEYF472	M.RESISTOR CH 1/10W 4.7K	2	
R105	ERJ6GEYF473	M.RESISTOR CH 1/10W 47K	1	
R106	ERJ6GEYG105	M.RESISTOR CH 1/10W 1M	1	
R108	ERJ6GEYG103	M.RESISTOR CH 1/10W 10K	1	
R109,10	ERJ6GEYF473	M.RESISTOR CH 1/10W 47K	2	
R111,12	ERJ6GEYF472	M.RESISTOR CH 1/10W 4.7K	2	
R113	ERJ6GEYF473	M.RESISTOR CH 1/10W 47K	1	
R114	ERJ6GEYG105	M.RESISTOR CH 1/10W 1M	1	
R116	ERJ6GEYG103	M.RESISTOR CH 1/10W 10K	1	
R117,18	ERJ6GEYF473	M.RESISTOR CH 1/10W 47K	2	
R119,20	ERJ6GEYF472	M.RESISTOR CH 1/10W 4.7K	2	
R121	ERJ6GEYF473	M.RESISTOR CH 1/10W 47K	1	
R122	ERJ6GEYG105	M.RESISTOR CH 1/10W 1M	1	
R124	ERJ6GEYG103	M.RESISTOR CH 1/10W 10K	1	
R125,26	ERJ6GEYF473	M.RESISTOR CH 1/10W 47K	2	
R127,28	ERJ6GEYF472	M.RESISTOR CH 1/10W 4.7K	2	
R129-37	ERJ6GEYF473	M.RESISTOR CH 1/10W 47K	9	
R138,39	ERJ6GEYG103	M.RESISTOR CH 1/10W 10K	2	
R141,42	ERJ6GEYF473	M.RESISTOR CH 1/10W 47K	2	
R145-47	ERJ6GEYF473	M.RESISTOR CH 1/10W 47K	3	
R150	ERJ6GEYG562	M.RESISTOR CH 1/10W 5.6K	1	
R152	ERJ6GEYG222	M.RESISTOR CH 1/10W 2.2K	1	
R153	ERJ6GEYG271	M.RESISTOR CH 1/10W 270	1	
R154	ERX1SJ1R0	M.RESISTOR 1W 1.0	1	
R155	ERJ6GEY0R00	M.RESISTOR CH 1/10W 0	1	
R156	ERJ6GEYG562	M.RESISTOR CH 1/10W 5.6K	1	
R157	ERJ6GEYG222	M.RESISTOR CH 1/10W 2.2K	1	
R158	ERJ6GEYG271	M.RESISTOR CH 1/10W 270	1	
R159	ERG1SJ220	M.RESISTOR 1W 22	1	
R160	ERJ6GEYG103	M.RESISTOR CH 1/10W 10K	1	
R161	ERJ6GEYG222	M.RESISTOR CH 1/10W 2.2K	1	
R162,63	ERJ8GCYG151	M.RESISTOR CH 1/8W 150	2	
R164,65	ERJ6GEYG563	M.RESISTOR CH 1/10W 56K	2	
R166	ERJ8GCYG152	M.RESISTOR CH 1/8W 1.5K	1	
R167-69	ERJ8GCYG681	M.RESISTOR CH 1/8W 680	3	
R170	ERJ6GEYG103	M.RESISTOR CH 1/10W 10K	1	
R171	ERJ6GEYG563	M.RESISTOR CH 1/10W 56K	1	
R172,73	ERJ6GEYG394	M.RESISTOR CH 1/10W 390K	2	
R174-81	ERJ6GEYG103	M.RESISTOR CH 1/10W 10K	8	
R182	ERJ6GEYF333	M.RESISTOR CH 1/10W 33K	1	
R184	ERJ6GEYF472	M.RESISTOR CH 1/10W 4.7K	1	
R185	ERJ6GEYG103	M.RESISTOR CH 1/10W 10K	1	
R186	ERJ6GEYG332	M.RESISTOR CH 1/10W 3.3K	1	
R187-90	ERJ8GCYJ391	M.RESISTOR CH 1/8W 390	4	
R191	ERJ6GEYG332	M.RESISTOR CH 1/10W 3.3K	1	
R192	ERJ6GEYF472	M.RESISTOR CH 1/10W 4.7K	1	
R193,94	ERJ6GEYG103	M.RESISTOR CH 1/10W 10K	2	
R195	ERJ6GEYF472	M.RESISTOR CH 1/10W 4.7K	1	
R196,97	ERJ8GCYJ391	M.RESISTOR CH 1/8W 390	2	
R198	ERJ6GEYG332	M.RESISTOR CH 1/10W 3.3K	1	
R199,00	ERJ8GCYJ391	M.RESISTOR CH 1/8W 390	2	
R201	ERJ6GEYG332	M.RESISTOR CH 1/10W 3.3K	1	
R202	ERJ6GEYG103	M.RESISTOR CH 1/10W 10K	1	
R203,04	ERJ6GEYF472	M.RESISTOR CH 1/10W 4.7K	2	
R205	ERJ6GEYG103	M.RESISTOR CH 1/10W 10K	1	
R206	ERJ6GEYG332	M.RESISTOR CH 1/10W 3.3K	1	
R207,08	ERJ8GCYJ391	M.RESISTOR CH 1/8W 390	2	
R209	ERJ6GEYG332	M.RESISTOR CH 1/10W 3.3K	1	
R210,11	ERJ8GCYJ391	M.RESISTOR CH 1/8W 390	2	
R212	ERJ6GEYF472	M.RESISTOR CH 1/10W 4.7K	1	
R213,14	ERJ6GEYG103	M.RESISTOR CH 1/10W 10K	2	
R215	ERJ6GEYF472	M.RESISTOR CH 1/10W 4.7K	1	
R216,17	ERJ8GCYJ391	M.RESISTOR CH 1/8W 390	2	
R218	ERJ6GEYG332	M.RESISTOR CH 1/10W 3.3K	1	
R219,20	ERJ8GCYJ391	M.RESISTOR CH 1/8W 390	2	
R221	ERJ6GEYG332	M.RESISTOR CH 1/10W 3.3K	1	
R222	ERJ6GEYG103	M.RESISTOR CH 1/10W 10K	1	
R223,24	ERJ6GEYF472	M.RESISTOR CH 1/10W 4.7K	2	
R225	ERJ6GEYG103	M.RESISTOR CH 1/10W 10K	1	

Ref.No.	Part No.	Part Name & Description	Pcs	Remarks
R226	ERJ6GEYG392	M.RESISTOR CH 1/10W 3.9K	1	
R227,28	ERJ8GCYJ391	M.RESISTOR CH 1/8W 390	2	
R229	ERJ6GEYG392	M.RESISTOR CH 1/10W 3.9K	1	
R230,31	ERJ8GCYJ391	M.RESISTOR CH 1/8W 390	2	
R232	ERJ6GEYF472	M.RESISTOR CH 1/10W 4.7K	1	
R233,34	ERJ6GEYG103	M.RESISTOR CH 1/10W 10K	2	
R235	ERJ6GEYF472	M.RESISTOR CH 1/10W 4.7K	1	
R236,37	ERJ8GCYJ391	M.RESISTOR CH 1/8W 390	2	
R238	ERJ6GEYG392	M.RESISTOR CH 1/10W 3.9K	1	
R239,40	ERJ8GCYJ391	M.RESISTOR CH 1/8W 390	2	
R241	ERJ6GEYG392	M.RESISTOR CH 1/10W 3.9K	1	
R242	ERJ6GEYG103	M.RESISTOR CH 1/10W 10K	1	
R243,44	ERJ6GEYF472	M.RESISTOR CH 1/10W 4.7K	2	
R245	ERJ6GEYG103	M.RESISTOR CH 1/10W 10K	1	
R246	ERJ6GEYG332	M.RESISTOR CH 1/10W 3.3K	1	
R247,48	ERJ8GCYJ391	M.RESISTOR CH 1/8W 390	2	
R249	ERJ6GEYG332	M.RESISTOR CH 1/10W 3.3K	1	
R250,51	ERJ8GCYJ391	M.RESISTOR CH 1/8W 390	2	
R252	ERJ6GEYF472	M.RESISTOR CH 1/10W 4.7K	1	
R253,54	ERJ6GEYG103	M.RESISTOR CH 1/10W 10K	2	
R255	ERJ6GEYF472	M.RESISTOR CH 1/10W 4.7K	1	
R256,57	ERJ8GCYJ391	M.RESISTOR CH 1/8W 390	2	
R258	ERJ6GEYG332	M.RESISTOR CH 1/10W 3.3K	1	
R259,60	ERJ8GCYJ391	M.RESISTOR CH 1/8W 390	2	
R261	ERJ6GEYG332	M.RESISTOR CH 1/10W 3.3K	1	
R262	ERJ6GEYG103	M.RESISTOR CH 1/10W 10K	1	
R263	ERJ6GEYF472	M.RESISTOR CH 1/10W 4.7K	1	
R266-69	ERJ6GEY0R00	M.RESISTOR CH 1/10W 0	4	
R271	ERJ6GEYG222	M.RESISTOR CH 1/10W 2.2K	1	
R273	ERJ6GEYG222	M.RESISTOR CH 1/10W 2.2K	1	
R275	ERJ6GEYG222	M.RESISTOR CH 1/10W 2.2K	1	
R277	ERJ6GEYG222	M.RESISTOR CH 1/10W 2.2K	1	
R284,85	ERJ6GEY0R00	M.RESISTOR CH 1/10W 0	2	
R288	ERJ6GEYF472	M.RESISTOR CH 1/10W 4.7K	1	
R290	ERJ6GEYF472	M.RESISTOR CH 1/10W 4.7K	1	
R291	ERJ6GEYG105	M.RESISTOR CH 1/10W 1M	1	
R292,93	ERJ6GEYF473	M.RESISTOR CH 1/10W 47K	2	
R294	ERJ6GEYG103	M.RESISTOR CH 1/10W 10K	1	
R295	ERJ6GEYF472	M.RESISTOR CH 1/10W 4.7K	1	
R296	ERJ6GEYF473	M.RESISTOR CH 1/10W 47K	1	
R297	ERJ6GEYF472	M.RESISTOR CH 1/10W 4.7K	1	
R298	ERJ6GEYG105	M.RESISTOR CH 1/10W 1M	1	
R299	ERJ6GEYF473	M.RESISTOR CH 1/10W 47K	1	
R304-15	ERJ8GCYJ391	M.RESISTOR CH 1/8W 390	12	
R316,17	ERG1SJ100	M.RESISTOR 1W 10	2	
R318	ERX1SJ6R2	M.RESISTOR 1W 6.2	1	
R319	ERG1SJ100	M.RESISTOR 1W 10	1	
R320	ERJ6GEYG222	M.RESISTOR CH 1/10W 2.2K	1	
R321-28	ERJ6GEYG470	M.RESISTOR CH 1/10W 47	8	
R329,30	ERJ6GEYG103	M.RESISTOR CH 1/10W 10K	2	
R332	ERJ6GEYG222	M.RESISTOR CH 1/10W 2.2K	1	
R333	ERJ6GEY0R00	M.RESISTOR CH 1/10W 0	1	
R334	ERJ6GEYG103	M.RESISTOR CH 1/10W 10K	1	
R337-39	ERJ8GCYG681	M.RESISTOR CH 1/8W 680	3	
R341	ERJ6GEYG105	M.RESISTOR CH 1/10W 1M	1	
R342	ERJ6GEYF473	M.RESISTOR CH 1/10W 47K	1	
R345	ERJ6GEYG105	M.RESISTOR CH 1/10W 1M	1	
R346	ERJ6GEYF473	M.RESISTOR CH 1/10W 47K	1	
R347	ERJ6GEYG104	M.RESISTOR CH 1/10W 100K	1	
R348	ERJ6GEYG103	M.RESISTOR CH 1/10W 10K	1	
R349-62	ERJ6GEYG470	M.RESISTOR CH 1/10W 47	14	
R363	ERJ6GEYF123	M.RESISTOR CH 1/10W 12K	1	
R364	ERJ6GEYG224	M.RESISTOR CH 1/10W 220K	1	
R365	ERJ6GEYG223	M.RESISTOR CH 1/10W 22K	1	
R366	ERJ6GEYG563	M.RESISTOR CH 1/10W 56K	1	
R367	ERJ6GEY0R00	M.RESISTOR CH 1/10W 0	1	
R368-70	ERJ6GEYG101	M.RESISTOR CH 1/10W 100	3	
R371	ERJ6GEYG103	M.RESISTOR CH 1/10W 10K	1	
R372	ERJ6GEY0R00	M.RESISTOR CH 1/10W 0	1	
R375,76	ERJ6GEY0R00	M.RESISTOR CH 1/10W 0	2	
R377-79	ERJ6GEYG563	M.RESISTOR CH 1/10W 56K	3	
R380	ERJ8GCYG152	M.RESISTOR CH 1/8W 1.5K	1	
R382,83	ERJ6GEY0R00	M.RESISTOR CH 1/10W 0	2	
R384	ERJ6GEYF473	M.RESISTOR CH 1/10W 47K	1	
R500	ERJ6GEYF473	M.RESISTOR CH 1/10W 47K	1	

Ref.No.	Part No.	Part Name & Description	Pcs	Remarks
R501	ERJ6GEYG103	M.RESISTOR CH 1/10W 10K	1	
R502,03	ERJ6GEYF473	M.RESISTOR CH 1/10W 47K	2	
R504-11	ERJ6GEYG103	M.RESISTOR CH 1/10W 10K	8	
R512	ERJ6GEYF473	M.RESISTOR CH 1/10W 47K	1	
R513-15	ERJ6GEYG103	M.RESISTOR CH 1/10W 10K	3	
R516,17	ERJ6GEYF473	M.RESISTOR CH 1/10W 47K	2	
R518,19	ERJ6GEYF472	M.RESISTOR CH 1/10W 4.7K	2	
R520	ERJ6GEYG101	M.RESISTOR CH 1/10W 100	1	
R521	ERJ6GEYF473	M.RESISTOR CH 1/10W 47K	1	
R523,24	ERJ6GEYF472	M.RESISTOR CH 1/10W 4.7K	2	
R525	ERJ6GEYF473	M.RESISTOR CH 1/10W 47K	1	
R527	ERJ6GEYG101	M.RESISTOR CH 1/10W 100	1	
R528-31	ERJ6GEYF473	M.RESISTOR CH 1/10W 47K	4	
R532,33	ERJ6GEYF472	M.RESISTOR CH 1/10W 4.7K	2	
R534	ERJ6GEYG101	M.RESISTOR CH 1/10W 100	1	
R535,36	ERJ6GEYF472	M.RESISTOR CH 1/10W 4.7K	2	
R537	ERJ6GEYG101	M.RESISTOR CH 1/10W 100	1	
R542	ERJ6GEYG223	M.RESISTOR CH 1/10W 22K	1	
R543	ERJ6GEYG101	M.RESISTOR CH 1/10W 100	1	
R544	ERJ6GEYG394	M.RESISTOR CH 1/10W 390K	1	
R545	ERJ6GEYG103	M.RESISTOR CH 1/10W 10K	1	
R546	ERJ6GEYG223	M.RESISTOR CH 1/10W 22K	1	
R547-49	ERJ6GEYF473	M.RESISTOR CH 1/10W 47K	3	
R550,51	ERJ6GEYG103	M.RESISTOR CH 1/10W 10K	2	
R554-58	ERJ6GEYG103	M.RESISTOR CH 1/10W 10K	5	
R580	ERJ6GEYF473	M.RESISTOR CH 1/10W 47K	1	
R585	ERJ6GEY0R00	M.RESISTOR CH 1/10W 0	1	
R590-94	ERJ6GEYF473	M.RESISTOR CH 1/10W 47K	5	
R598	ERJ6GEYG101	M.RESISTOR CH 1/10W 100	1	
R599	ERJ6GEYG103	M.RESISTOR CH 1/10W 10K	1	
R606,07	ERJ6GEY0R00	M.RESISTOR CH 1/10W 0	2	
R608	ERJ6GEYG222	M.RESISTOR CH 1/10W 2.2K	1	
R609	ERJ6GEYF473	M.RESISTOR CH 1/10W 47K	1	
R610-13	ERJ6GEYG103	M.RESISTOR CH 1/10W 10K	4	
R629	ERJ6GEY0R00	M.RESISTOR CH 1/10W 0	1	
R634	ERJ6GEY0R00	M.RESISTOR CH 1/10W 0	1	
R636	ERJ6GEY0R00	M.RESISTOR CH 1/10W 0	1	
R638,39	ERJ6GEY0R00	M.RESISTOR CH 1/10W 0	2	
R641,42	ERJ6GEYF473	M.RESISTOR CH 1/10W 47K	2	
R643,44	ERJ6GEY0R00	M.RESISTOR CH 1/10W 0	2	
R646,47	ERJ6GEY0R00	M.RESISTOR CH 1/10W 0	2	
R648,49	ERJ6GEYG101	M.RESISTOR CH 1/10W 100	2	
R700	ERJ6GEY0R00	M.RESISTOR CH 1/10W 0	1	
R701	ERJ6GEYG103	M.RESISTOR CH 1/10W 10K	1	
R702	ERJ6GEYG222	M.RESISTOR CH 1/10W 2.2K	1	
R705-10	ERJ6GEYG394	M.RESISTOR CH 1/10W 390K	6	
R711-16	ERJ6GEYG102	M.RESISTOR CH 1/10W 1K	6	
R717	ERJ6GEYG103	M.RESISTOR CH 1/10W 10K	1	
R718	ERJ6GEYG101	M.RESISTOR CH 1/10W 100	1	
R719,20	ERJ6GEYG102	M.RESISTOR CH 1/10W 1K	2	
R721,22	ERJ6GEY0R00	M.RESISTOR CH 1/10W 0	2	
R723-26	ERJ6GEYG102	M.RESISTOR CH 1/10W 1K	4	
R727	ERJ6GEYG105	M.RESISTOR CH 1/10W 1M	1	
R728-31	ERJ6GEYF473	M.RESISTOR CH 1/10W 47K	4	
R732-34	ERJ6GEYG102	M.RESISTOR CH 1/10W 1K	3	
R735	ERJ6GEYG103	M.RESISTOR CH 1/10W 10K	1	
R736	ERJ6GEYG104	M.RESISTOR CH 1/10W 100K	1	
R737	ERJ6GEYG105	M.RESISTOR CH 1/10W 1M	1	
R738	ERJ6GEYG221	M.RESISTOR CH 1/10W 220	1	
R739,40	ERJ6GEYG103	M.RESISTOR CH 1/10W 10K	2	
R741,42	ERJ6GEYG104	M.RESISTOR CH 1/10W 100K	2	
R743,44	ERJ6GEYG101	M.RESISTOR CH 1/10W 100	2	
R745,46	ERJ6GEYG102	M.RESISTOR CH 1/10W 1K	2	
R747	ERJ6GEYG562	M.RESISTOR CH 1/10W 5.6K	1	
R748	ERJ6GEYG102	M.RESISTOR CH 1/10W 1K	1	
R749,50	ERJ6GEYG103	M.RESISTOR CH 1/10W 10K	2	
R751	ERJ6GEYG102	M.RESISTOR CH 1/10W 1K	1	
R752,53	ERJ6GEYG103	M.RESISTOR CH 1/10W 10K	2	
R754	ERJ6GEY0R00	M.RESISTOR CH 1/10W 0	1	
R755	ERJ6GEYG103	M.RESISTOR CH 1/10W 10K	1	
R756-59	ERJ6GEYG104	M.RESISTOR CH 1/10W 100K	4	
R760	ERJ6GEY0R00	M.RESISTOR CH 1/10W 0	1	FOR VEP86267A
R762	ERJ6GEY0R00	M.RESISTOR CH 1/10W 0	1	
R764,65	ERJ6GEY0R00	M.RESISTOR CH 1/10W 0	2	
R766	ERJ6GEYG105	M.RESISTOR CH 1/10W 1M	1	

Ref.No.	Part No.	Part Name & Description	Pcs	Remarks
R767-69	ERJ6GEYG103	M.RESISTOR CH 1/10W 10K	3	
R770	ERJ6GEYF473	M.RESISTOR CH 1/10W 47K	1	
R771	ERJ6GEYG101	M.RESISTOR CH 1/10W 100	1	
R772	ERJ6GEYG103	M.RESISTOR CH 1/10W 10K	1	
R773	ERJ6GEYG562	M.RESISTOR CH 1/10W 5.6K	1	
R774	ERJ6GEYG220	M.RESISTOR CH 1/10W 22	1	
R775,76	ERJ6GEYG332	M.RESISTOR CH 1/10W 3.3K	2	
R777	ERJ6GEYG222	M.RESISTOR CH 1/10W 2.2K	1	
R778-81	ERJ6RBD332	M.RESISTOR CH 1/10W 3.3K	4	
R782	ERJ6RED470	M.RESISTOR CH 1/10W 47	1	
R783	ERJ6RBD562	M.RESISTOR CH 1/10W 5.6K	1	
R784	ERJ6GEYG103	M.RESISTOR CH 1/10W 10K	1	
R785	ERJ6RBD562	M.RESISTOR CH 1/10W 5.6K	1	
R786	ERJ6RED820	M.RESISTOR CH 1/10W 82	1	
R787	ERJ6RED470	M.RESISTOR CH 1/10W 47	1	
R788	ERJ6RBD562	M.RESISTOR CH 1/10W 5.6K	1	
R789	ERJ6RBD103	M.RESISTOR CH 1/10W 10K	1	
R790	ERJ6RBD123	M.RESISTOR CH 1/10W 12K	1	
R791	ERJ6RBD683	M.RESISTOR CH 1/10W 68K	1	
R792	ERJ6GEYG394	M.RESISTOR CH 1/10W 390K	1	
R793	ERJ6RBD333	M.RESISTOR CH 1/10W 33K	1	
R794,95	ERJ6GEYG223	M.RESISTOR CH 1/10W 22K	2	
R796	ERJ6GEYG104	M.RESISTOR CH 1/10W 100K	1	
R797,98	ERJ6RBD102	M.RESISTOR CH 1/10W 1K	2	
R799	ERJ6GEYG102	M.RESISTOR CH 1/10W 1K	1	
R800,01	ERJ6GEY0R00	M.RESISTOR CH 1/10W 0	2	
R802	ERJ6RBD103	M.RESISTOR CH 1/10W 10K	1	
R803,04	ERJ6RBD102	M.RESISTOR CH 1/10W 1K	2	
R805-08	ERJ6RBD222	M.RESISTOR CH 1/10W 2.2K	4	
R809	ERJ6GEYF473	M.RESISTOR CH 1/10W 47K	1	
R810	ERJ6GEYG104	M.RESISTOR CH 1/10W 100K	1	
R811,12	ERJ6GEYG103	M.RESISTOR CH 1/10W 10K	2	
R813	ERJ6GEYG824	M.RESISTOR CH 1/10W 820K	1	
R814	ERJ6GEYG102	M.RESISTOR CH 1/10W 1K	1	
R815	ERJ6GEYG471	M.RESISTOR CH 1/10W 470	1	
R816-39	ERJ6GEYG470	M.RESISTOR CH 1/10W 47	24	
R840-47	ERJ6GEYG103	M.RESISTOR CH 1/10W 10K	8	
R849	ERJ6GEY0R00	M.RESISTOR CH 1/10W 0	1	
R853-56	ERJ6GEY0R00	M.RESISTOR CH 1/10W 0	4	
R857	ERJ6GEYG103	M.RESISTOR CH 1/10W 10K	1	
R858,59	ERJ6GEY0R00	M.RESISTOR CH 1/10W 0	2	
R860-62	ERJ6GEYF473	M.RESISTOR CH 1/10W 47K	3	
R865	ERJ6RBD562	M.RESISTOR CH 1/10W 5.6K	1	
R866	ERJ6GEY0R00	M.RESISTOR CH 1/10W 0	1	
R867	ERJ6GEYG102	M.RESISTOR CH 1/10W 1K	1	
R868	ERJ6GEYG103	M.RESISTOR CH 1/10W 10K	1	
R869	ERJ6GEYG223	M.RESISTOR CH 1/10W 22K	1	
R870	ERJ6GEYG102	M.RESISTOR CH 1/10W 1K	1	
R871,72	ERJ6GEYG470	M.RESISTOR CH 1/10W 47	2	
R873	ERJ6GEYG102	M.RESISTOR CH 1/10W 1K	1	
R874,75	ERJ6GEYG470	M.RESISTOR CH 1/10W 47	2	
R876	ERJ6GEYG102	M.RESISTOR CH 1/10W 1K	1	
R877,78	ERJ6GEYG394	M.RESISTOR CH 1/10W 390K	2	
R879,80	ERJ6GEYG470	M.RESISTOR CH 1/10W 47	2	
R881	ERJ6GEYG102	M.RESISTOR CH 1/10W 1K	1	
R882,83	ERJ6GEYG394	M.RESISTOR CH 1/10W 390K	2	
R884	ERJ6GEYG103	M.RESISTOR CH 1/10W 10K	1	
R885	ERJ6GEYG223	M.RESISTOR CH 1/10W 22K	1	
R886	ERJ6GEYG102	M.RESISTOR CH 1/10W 1K	1	
R887,88	ERJ6GEYG394	M.RESISTOR CH 1/10W 390K	2	
R890	ERJ6GEYG470	M.RESISTOR CH 1/10W 47	1	
R891	ERJ6GEY0R00	M.RESISTOR CH 1/10W 0	1	
R893	ERJ6GEY0R00	M.RESISTOR CH 1/10W 0	1	
R894	ERJ6GEYG105	M.RESISTOR CH 1/10W 1M	1	
R896,97	ERJ6GEY0R00	M.RESISTOR CH 1/10W 0	2	
R899-04	ERJ6GEY0R00	M.RESISTOR CH 1/10W 0	6	
R906	ERJ6GEY0R00	M.RESISTOR CH 1/10W 0	1	
R908	ERJ6GEY0R00	M.RESISTOR CH 1/10W 0	1	
R912	ERJ6GEY0R00	M.RESISTOR CH 1/10W 0	1	
R914	ERJ6GEY0R00	M.RESISTOR CH 1/10W 0	1	
R916	ERJ6GEY0R00	M.RESISTOR CH 1/10W 0	1	
R918	ERJ6GEY0R00	M.RESISTOR CH 1/10W 0	1	
R920	ERJ6GEY0R00	M.RESISTOR CH 1/10W 0	1	
R922	ERJ6GEY0R00	M.RESISTOR CH 1/10W 0	1	
R924	ERJ6GEY0R00	M.RESISTOR CH 1/10W 0	1	

Ref.No.	Part No.	Part Name & Description	Pcs	Remarks
R951	ERJ6GEY0R00	M.RESISTOR CH 1/10W 0	1	
R955	ERJ6GEY0R00	M.RESISTOR CH 1/10W 0	1	
R957	ERJ6GEY0R00	M.RESISTOR CH 1/10W 0	1	
R958	ERJ6GEYG470	M.RESISTOR CH 1/10W 47	1	
R960	ERJ6GEY0R00	M.RESISTOR CH 1/10W 0	1	
R961-68	ERJ6GEYG103	M.RESISTOR CH 1/10W 10K	8	
R977	ERJ6GEY0R00	M.RESISTOR CH 1/10W 0	1	
R980-82	ERJ6GEY0R00	M.RESISTOR CH 1/10W 0	3	
R983	ERJ6GEYG105	M.RESISTOR CH 1/10W 1M	1	
R984	ERJ6GEY0R00	M.RESISTOR CH 1/10W 0	1	
R986,87	ERJ6GEY0R00	M.RESISTOR CH 1/10W 0	2	
R988	ERJ6GEYG105	M.RESISTOR CH 1/10W 1M	1	
R989	ERJ6GEY0R00	M.RESISTOR CH 1/10W 0	1	
R991,92	ERJ6GEY0R00	M.RESISTOR CH 1/10W 0	2	
R993	ERJ6GEYG105	M.RESISTOR CH 1/10W 1M	1	
R994	ERJ6GEY0R00	M.RESISTOR CH 1/10W 0	1	
R996,97	ERJ6GEY0R00	M.RESISTOR CH 1/10W 0	2	
R998	ERJ6GEYG105	M.RESISTOR CH 1/10W 1M	1	
R999	ERJ6GEY0R00	M.RESISTOR CH 1/10W 0	1	
R1001,02	ERJ6GEY0R00	M.RESISTOR CH 1/10W 0	2	
R1003	ERJ6GEYG105	M.RESISTOR CH 1/10W 1M	1	
R1005,06	ERJ6GEY0R00	M.RESISTOR CH 1/10W 0	2	
R1010,11	ERJ6GEY0R00	M.RESISTOR CH 1/10W 0	2	
R1013-17	ERJ6GEY0R00	M.RESISTOR CH 1/10W 0	5	
R1019-22	ERJ6GEY0R00	M.RESISTOR CH 1/10W 0	4	
SW501	VSS0367-08B	SWITCH	1	
TG1	EYF6CU	TEST POINT	1	
TG701	EYF6CU	TEST POINT	1	
TP8	EYF6CU	TEST POINT	1	
TP13,14	EYF6CU	TEST POINT	2	
VC1	VCV0049	TRIMMER	1	
X1	VSX0641	CRYSTAL OSCILLATOR	1	
X500	VSX0641	CRYSTAL OSCILLATOR	1	
X701	VSX0654	CRYSTAL OSCILLATOR	1	
X702	VSX1001	CRYSTAL OSCILLATOR	1	
X703	VSX0958	CRYSTAL OSCILLATOR	1	FOR VEP86267A
X703	VSX0957	CRYSTAL OSCILLATOR	1	FOR VEP86267B
		MISCELLANEOUS		
	VML2143	CARD PULLER	1	
	VML2144	CARD PULLER	1	
■E4	VEP83410C	F4 VIDEO OUT P.C.BOARD	1	(RTL)
C3001	ECEV1CV470Q	E.CAPACITOR CH 16V 47U	1	
C3002	ECUX1E104ZFV	C.CAPACITOR CH 25V 0.1U	1	
C3003	ECEV1CV470Q	E.CAPACITOR CH 16V 47U	1	
C3004	ECUX1E104ZFV	C.CAPACITOR CH 25V 0.1U	1	
C3010	ECUX1E104ZFV	C.CAPACITOR CH 25V 0.1U	1	
C3011,12	ECEV1EV100Q	E.CAPACITOR CH 25V 10U	2	
C3013	ECUX1E104ZFV	C.CAPACITOR CH 25V 0.1U	1	
C3014,15	ECEV1CV100Q	E.CAPACITOR CH 16V 10U	2	
C3016	ECUX1E104ZFV	C.CAPACITOR CH 25V 0.1U	1	
C3017,18	ECEV1CV100Q	E.CAPACITOR CH 16V 10U	2	
C3019	ECUX1E104ZFV	C.CAPACITOR CH 25V 0.1U	1	
C3020,21	ECEV1EV100Q	E.CAPACITOR CH 25V 10U	2	
C3022	ECUX1E104ZFV	C.CAPACITOR CH 25V 0.1U	1	
C3023	ECEV1CV100Q	E.CAPACITOR CH 16V 10U	1	
C3024,25	ECUX1E104ZFV	C.CAPACITOR CH 25V 0.1U	2	
C3026	ECEV1CV100Q	E.CAPACITOR CH 16V 10U	1	
C3027,28	ECUX1E104ZFV	C.CAPACITOR CH 25V 0.1U	2	
C3029	ECEV1CV470Q	E.CAPACITOR CH 16V 47U	1	
C3030,31	ECUX1E104ZFV	C.CAPACITOR CH 25V 0.1U	2	
C3032	ECEV1CV100Q	E.CAPACITOR CH 16V 10U	1	
C3033,34	ECUX1E104ZFV	C.CAPACITOR CH 25V 0.1U	2	
C3035	ECEV1CV100Q	E.CAPACITOR CH 16V 10U	1	
C3036,37	ECUX1E104ZFV	C.CAPACITOR CH 25V 0.1U	2	

Ref.No.	Part No.	Part Name & Description	Pcs	Remarks
C3038	ECEV1CV100Q	E.CAPACITOR CH 16V 10U	1	
C3039,40	ECUX1E104ZFV	C.CAPACITOR CH 25V 0.1U	2	
C3041	ECEV1CV100Q	E.CAPACITOR CH 16V 10U	1	
C3042	ECUX1E104ZFV	C.CAPACITOR CH 25V 0.1U	1	
C3050-57	ECUX1E104ZFV	C.CAPACITOR CH 25V 0.1U	8	
C3058	ECUX1H271JCV	C.CAPACITOR CH 50V 270P	1	
C3070-74	ECUX1E104ZFV	C.CAPACITOR CH 25V 0.1U	5	
C3075	ECUX1H820JCV	C.CAPACITOR CH 50V 82P	1	
C3076	ECEV1EV100Q	E.CAPACITOR CH 25V 10U	1	
C3077	ECUX1E104ZFV	C.CAPACITOR CH 25V 0.1U	1	
C3078	ECUX1H103KBV	C.CAPACITOR CH 50V 0.01U	1	
C3079,80	ECUX1E104ZFV	C.CAPACITOR CH 25V 0.1U	2	
C3081	ECUX1H103KBV	C.CAPACITOR CH 50V 0.01U	1	
C3082	ECEV1EN3R3Q	E.CAPACITOR CH 25V 3.3U	1	
C3083	ECUX1H102JCV	C.CAPACITOR CH 50V 1000P	1	
C3084	ECUX1H103KBV	C.CAPACITOR CH 50V 0.01U	1	
C3085,86	ECUX1H470JCV	C.CAPACITOR CH 50V 47P	2	
C3087	ECUX1H103KBV	C.CAPACITOR CH 50V 0.01U	1	
C3088,89	ECUX1E104ZFV	C.CAPACITOR CH 25V 0.1U	2	
C3091,92	ECUX1E104ZFV	C.CAPACITOR CH 25V 0.1U	2	
C3100-04	ECUX1E104ZFV	C.CAPACITOR CH 25V 0.1U	5	
C3105-07	ECUX1H102JCV	C.CAPACITOR CH 50V 1000P	3	
C3108	ECUX1H101JCV	C.CAPACITOR CH 50V 100P	1	
C3109	ECUX1H102JCV	C.CAPACITOR CH 50V 1000P	1	
C3110	ECUX1H101JCV	C.CAPACITOR CH 50V 100P	1	
C3111	ECUX1E104ZFV	C.CAPACITOR CH 25V 0.1U	1	
C3112,13	ECUX1H150JCV	C.CAPACITOR CH 50V 15P	2	
C3114	ECUX1E104ZFV	C.CAPACITOR CH 25V 0.1U	1	
C3117-19	ECUX1E104ZFV	C.CAPACITOR CH 25V 0.1U	3	
C3160-65	ECUX1E104ZFV	C.CAPACITOR CH 25V 0.1U	6	
C3166,67	ECUX1H470JCV	C.CAPACITOR CH 50V 47P	2	
C3168,69	ECUX1H820JCV	C.CAPACITOR CH 50V 82P	2	
C3170,71	ECUX1E104ZFV	C.CAPACITOR CH 25V 0.1U	2	
C3172,73	ECUX1H103KBV	C.CAPACITOR CH 50V 0.01U	2	
C3174	ECEV1HN010Q	E.CAPACITOR CH 50V 1U	1	
C3175,76	ECUX1E104ZFV	C.CAPACITOR CH 25V 0.1U	2	
C3177	ECUX1E104KBN	C.CAPACITOR CH 25V 0.1U	1	
C3178	ECUX1H103KBV	C.CAPACITOR CH 50V 0.01U	1	
C3179-82	ECUX1E104KBN	C.CAPACITOR CH 25V 0.1U	4	
C3183,84	ECUX1E104ZFV	C.CAPACITOR CH 25V 0.1U	2	
C3200-03	ECUX1E104ZFV	C.CAPACITOR CH 25V 0.1U	4	
C3207	ECUX1H471JCV	C.CAPACITOR CH 50V 470P	1	
C3208	ECUX1H101JCV	C.CAPACITOR CH 50V 100P	1	
C3257	ECUX1E104ZFV	C.CAPACITOR CH 25V 0.1U	1	
C3260-65	ECUX1E104ZFV	C.CAPACITOR CH 25V 0.1U	6	
C3266,67	ECUX1H103KBV	C.CAPACITOR CH 50V 0.01U	2	
C3268	ECEV1HN010Q	E.CAPACITOR CH 50V 1U	1	
C3269	ECUX1H102JCV	C.CAPACITOR CH 50V 1000P	1	
C3270	ECUX1E104ZFV	C.CAPACITOR CH 25V 0.1U	1	
C3280-83	ECUX1E104ZFV	C.CAPACITOR CH 25V 0.1U	4	
C3284,85	ECUX1E104KBN	C.CAPACITOR CH 25V 0.1U	2	
C3286	ECUX1H103KBV	C.CAPACITOR CH 50V 0.01U	1	
C3287,88	ECUX1E104ZFV	C.CAPACITOR CH 25V 0.1U	2	
C3289	ECUX1E104KBN	C.CAPACITOR CH 25V 0.1U	1	
C3290	ECUX1H103KBV	C.CAPACITOR CH 50V 0.01U	1	
C3291	ECEV1HN010Q	E.CAPACITOR CH 50V 1U	1	
C3292	ECUX1E104ZFV	C.CAPACITOR CH 25V 0.1U	1	
C3300-04	ECUX1E104ZFV	C.CAPACITOR CH 25V 0.1U	5	
C3330,31	ECUX1E104ZFV	C.CAPACITOR CH 25V 0.1U	2	
C3340-43	ECUX1E104ZFV	C.CAPACITOR CH 25V 0.1U	4	
C3350-53	ECUX1E104ZFV	C.CAPACITOR CH 25V 0.1U	4	
C3370-83	ECUX1E104ZFV	C.CAPACITOR CH 25V 0.1U	14	
C3430	ECUX1E104ZFV	C.CAPACITOR CH 25V 0.1U	1	
C3432-40	ECUX1E104ZFV	C.CAPACITOR CH 25V 0.1U	9	
C3442,43	ECUX1E104ZFV	C.CAPACITOR CH 25V 0.1U	2	
C3445,46	ECUX1E104ZFV	C.CAPACITOR CH 25V 0.1U	2	
C3452	ECUX1H050CCV	C.CAPACITOR CH 50V 5P	1	
C3455	ECUX1H101JCV	C.CAPACITOR CH 50V 100P	1	
C3457	ECUX1H020CCV	C.CAPACITOR CH 50V 2P	1	
C3460	ECUX1E104ZFV	C.CAPACITOR CH 25V 0.1U	1	
C3464	ECEV1CV100Q	E.CAPACITOR CH 16V 10U	1	
C3465	ECUX1E104ZFV	C.CAPACITOR CH 25V 0.1U	1	
C3466	ECEV1CV100Q	E.CAPACITOR CH 16V 10U	1	
C3467,68	ECUX1E104ZFV	C.CAPACITOR CH 25V 0.1U	2	
C3469	ECEV1CV100Q	E.CAPACITOR CH 16V 10U	1	

Ref.No.	Part No.	Part Name & Description	Pcs	Remarks
C3470	ECUX1H470JCV	C.CAPACITOR CH 50V 47P	1	
C3471	ECUX1H020CCV	C.CAPACITOR CH 50V 2P	1	
C3472-74	ECUX1E104ZFV	C.CAPACITOR CH 25V 0.1U	3	
C3475	ECEV1CV100Q	E.CAPACITOR CH 16V 10U	1	
C3476-83	ECUX1E104ZFV	C.CAPACITOR CH 25V 0.1U	8	
C3484	ECEV1CV100Q	E.CAPACITOR CH 16V 10U	1	
C3485	ECUX1H102JCV	C.CAPACITOR CH 50V 1000P	1	
C3486	ECUX1H101JCV	C.CAPACITOR CH 50V 100P	1	
C3487	ECUX1E104ZFV	C.CAPACITOR CH 25V 0.1U	1	
C3500-11	ECUX1E104ZFV	C.CAPACITOR CH 25V 0.1U	12	
C3551-57	ECUX1E104ZFV	C.CAPACITOR CH 25V 0.1U	7	
C3576-79	ECUX1E104ZFV	C.CAPACITOR CH 25V 0.1U	4	
C3580,81	ECUM1E104ZFN	C.CAPACITOR CH 25V 0.1U	2	
C3582	ECEV0JV330Q	E.CAPACITOR CH6.3V 33U	1	
C3583-86	ECUX1E104ZFV	C.CAPACITOR CH 25V 0.1U	4	
C3588-92	ECUX1E104ZFV	C.CAPACITOR CH 25V 0.1U	5	
C3600	ECEV1EV330Q	E.CAPACITOR CH 25V 33U	1	
C3601	ECUX1E104ZFV	C.CAPACITOR CH 25V 0.1U	1	
C3602	ECEV1CV470Q	E.CAPACITOR CH 16V 47U	1	
C3603	ECUX1E104ZFV	C.CAPACITOR CH 25V 0.1U	1	
C3604	ECEV1CV470Q	E.CAPACITOR CH 16V 47U	1	
C3605	ECUX1E104ZFV	C.CAPACITOR CH 25V 0.1U	1	
C3606	ECEV1EV330Q	E.CAPACITOR CH 25V 33U	1	
C3607,08	ECUX1E104ZFV	C.CAPACITOR CH 25V 0.1U	2	
C3609	ECEV1CV100Q	E.CAPACITOR CH 16V 10U	1	
C3610,11	ECUX1E104ZFV	C.CAPACITOR CH 25V 0.1U	2	
C3612	ECEV1CV100Q	E.CAPACITOR CH 16V 10U	1	
C3613,14	ECUX1E104ZFV	C.CAPACITOR CH 25V 0.1U	2	
C3615	ECEV1CV100Q	E.CAPACITOR CH 16V 10U	1	
C3616,17	ECUX1E104ZFV	C.CAPACITOR CH 25V 0.1U	2	
C3618	ECEV1CV100Q	E.CAPACITOR CH 16V 10U	1	
C3619,20	ECUX1E104ZFV	C.CAPACITOR CH 25V 0.1U	2	
C3621	ECEV1CV100Q	E.CAPACITOR CH 16V 10U	1	
C3622,23	ECUX1E104ZFV	C.CAPACITOR CH 25V 0.1U	2	
C3624	ECEV1CV100Q	E.CAPACITOR CH 16V 10U	1	
C3625,26	ECUX1E104ZFV	C.CAPACITOR CH 25V 0.1U	2	
C3627	ECEV1CV100Q	E.CAPACITOR CH 16V 10U	1	
C3628	ECUX1E104ZFV	C.CAPACITOR CH 25V 0.1U	1	
C3650	ECEV1CV470Q	E.CAPACITOR CH 16V 47U	1	
C3651	ECUX1H330JCV	C.CAPACITOR CH 50V 33P	1	
C3652	ECUX1H220JCV	C.CAPACITOR CH 50V 22P	1	
C3653	ECUX1H680JCV	C.CAPACITOR CH 50V 68P	1	
C3654,55	ECUX1E104KBN	C.CAPACITOR CH 25V 0.1U	2	
C3656	ECEV1HN010Q	E.CAPACITOR CH 50V 1U	1	
C3657	ECUX1E104KBN	C.CAPACITOR CH 25V 0.1U	1	
C3658	ECUX1E104ZFV	C.CAPACITOR CH 25V 0.1U	1	
C3659	ECUX1H103KBV	C.CAPACITOR CH 50V 0.01U	1	
C3660	ECUX1H820JCV	C.CAPACITOR CH 50V 82P	1	
C3661,62	ECUX1H103KBV	C.CAPACITOR CH 50V 0.01U	2	
C3663	ECUX1H472KBV	C.CAPACITOR CH 50V 4700P	1	
C3664	ECUX1E104ZFV	C.CAPACITOR CH 25V 0.1U	1	
C3665	ECUX1H103KBV	C.CAPACITOR CH 50V 0.01U	1	
C3666	ECUX1E104ZFV	C.CAPACITOR CH 25V 0.1U	1	
C3700	ECUX1E104ZFV	C.CAPACITOR CH 25V 0.1U	1	
C3701	ECEV1CV100Q	E.CAPACITOR CH 16V 10U	1	
C3702	ECUX1E104ZFV	C.CAPACITOR CH 25V 0.1U	1	
C3703	ECEV1CV100Q	E.CAPACITOR CH 16V 10U	1	
C3704	ECUX1E104ZFV	C.CAPACITOR CH 25V 0.1U	1	
C3705	ECEV1CV100Q	E.CAPACITOR CH 16V 10U	1	
C3706,07	ECUX1E104KBN	C.CAPACITOR CH 25V 0.1U	2	
C3708-10	ECUX1E104ZFV	C.CAPACITOR CH 25V 0.1U	3	
C3711	ECEV1CV100Q	E.CAPACITOR CH 16V 10U	1	
C3712	ECUX1H560JCV	C.CAPACITOR CH 50V 56P	1	
C3713	ECUX1H020CCV	C.CAPACITOR CH 50V 2P	1	
C3714	ECUX1H121JCV	C.CAPACITOR CH 50V 120P	1	
C3717-20	ECUX1E104ZFV	C.CAPACITOR CH 25V 0.1U	4	
C3721	ECUX1H470JCV	C.CAPACITOR CH 50V 47P	1	
C3725	ECUX1H180JCV	C.CAPACITOR CH 50V 18P	1	
C3726	ECUX1H560JCV	C.CAPACITOR CH 50V 56P	1	
C3727,28	ECUX1E104ZFV	C.CAPACITOR CH 25V 0.1U	2	
C3729	ECUX1H100DCV	C.CAPACITOR CH 50V 10P	1	
C3730	ECUX1H820JCV	C.CAPACITOR CH 50V 82P	1	
C3731	ECEV1CV100Q	E.CAPACITOR CH 16V 10U	1	
C3732	ECUX1H151JCV	C.CAPACITOR CH 50V 150P	1	
C3733,34	ECUX1E104ZFV	C.CAPACITOR CH 25V 0.1U	2	

Ref.No.	Part No.	Part Name & Description	Pcs	Remarks
C3735,36	ECUX1H221JCV	C.CAPACITOR CH 50V 220P	2	
C3739,40	ECUX1E104ZFV	C.CAPACITOR CH 25V 0.1U	2	
C3745	ECUX1H180JCV	C.CAPACITOR CH 50V 18P	1	
C3746	ECUX1H560JCV	C.CAPACITOR CH 50V 56P	1	
C3747,48	ECUX1E104ZFV	C.CAPACITOR CH 25V 0.1U	2	
C3749	ECUX1H100DCV	C.CAPACITOR CH 50V 10P	1	
C3750	ECUX1H820JCV	C.CAPACITOR CH 50V 82P	1	
C3751	ECEV1CV100Q	E.CAPACITOR CH 16V 10U	1	
C3752,53	ECUX1E104ZFV	C.CAPACITOR CH 25V 0.1U	2	
C3754,55	ECUX1H221JCV	C.CAPACITOR CH 50V 220P	2	
C3756-58	ECUX1H102JCV	C.CAPACITOR CH 50V 1000P	3	
C3759	ECUX1H821JCV	C.CAPACITOR CH 50V 820P	1	
C3760	ECUX1E104ZFV	C.CAPACITOR CH 25V 0.1U	1	
C3761-64	ECEA1CGE221	E.CAPACITOR 16V 220U	4	
C3800	ECUX1E104ZFV	C.CAPACITOR CH 25V 0.1U	1	
C3801,02	ECEV1CV100Q	E.CAPACITOR CH 16V 10U	2	
C3803	ECUX1E104ZFV	C.CAPACITOR CH 25V 0.1U	1	
C3804	ECEV1CV100Q	E.CAPACITOR CH 16V 10U	1	
C3805	ECUX1E104ZFV	C.CAPACITOR CH 25V 0.1U	1	
C3810	ECUX1H391JCV	C.CAPACITOR CH 50V 390P	1	
C3811	ECUX1H151JCV	C.CAPACITOR CH 50V 150P	1	
C3812,13	ECUX1E104ZFV	C.CAPACITOR CH 25V 0.1U	2	
C3814,15	ECUX1E104KBN	C.CAPACITOR CH 25V 0.1U	2	
C3817	ECUX1H103KBV	C.CAPACITOR CH 50V 0.01U	1	
C3818,19	ECUX1E104ZFV	C.CAPACITOR CH 25V 0.1U	2	
C3820,21	ECEV1CV100Q	E.CAPACITOR CH 16V 10U	2	
C3824	ECUX1E104KBN	C.CAPACITOR CH 25V 0.1U	1	
C3825,26	ECUX1E104ZFV	C.CAPACITOR CH 25V 0.1U	2	
C3827,28	ECUX1H220JCV	C.CAPACITOR CH 50V 22P	2	
C3829	ECUX1E104ZFV	C.CAPACITOR CH 25V 0.1U	1	
C3830	ECUX1H820JCV	C.CAPACITOR CH 50V 82P	1	
C3831	ECUX1E104KBN	C.CAPACITOR CH 25V 0.1U	1	
C3832,33	ECUX1E104ZFV	C.CAPACITOR CH 25V 0.1U	2	
C3834	ECUX1H100DCV	C.CAPACITOR CH 50V 10P	1	
C3835,36	ECUX1E104KBN	C.CAPACITOR CH 25V 0.1U	2	
C3837	ECUX1H271JCV	C.CAPACITOR CH 50V 270P	1	
C3838	ECUX1H151JCV	C.CAPACITOR CH 50V 150P	1	
C3839	ECUX1E104KBN	C.CAPACITOR CH 25V 0.1U	1	
C3840	ECUX1H820JCV	C.CAPACITOR CH 50V 82P	1	
C3841-43	ECUX1E104ZFV	C.CAPACITOR CH 25V 0.1U	3	
C3844	ECUX1E104KBN	C.CAPACITOR CH 25V 0.1U	1	
C3845,46	ECUX1H220JCV	C.CAPACITOR CH 50V 22P	2	
C3847	ECUX1E104KBN	C.CAPACITOR CH 25V 0.1U	1	
C3848,49	ECUX1H220JCV	C.CAPACITOR CH 50V 22P	2	
C3850,51	ECUX1E104ZFV	C.CAPACITOR CH 25V 0.1U	2	
C3857-60	ECUX1E104ZFV	C.CAPACITOR CH 25V 0.1U	4	
C3861	ECUX1E473KBN	C.CAPACITOR CH 25V 0.047U	1	
C3862	ECEV1CV100Q	E.CAPACITOR CH 16V 10U	1	
C3864,65	ECUX1E104ZFV	C.CAPACITOR CH 25V 0.1U	2	
C3866	ECEV0JV470Q	E.CAPACITOR CH6.3V 47U	1	
C3867	ECUX1E104ZFV	C.CAPACITOR CH 25V 0.1U	1	
C3868	ECEV1CV100Q	E.CAPACITOR CH 16V 10U	1	
C3869	ECEV0JV470Q	E.CAPACITOR CH6.3V 47U	1	
C3870	ECUX1E473KBN	C.CAPACITOR CH 25V 0.047U	1	
C3871	ECUX1E104ZFV	C.CAPACITOR CH 25V 0.1U	1	
C3873	ECUX1E104ZFV	C.CAPACITOR CH 25V 0.1U	1	
C3875	ECEV1CV100Q	E.CAPACITOR CH 16V 10U	1	
C3876	ECUX1E473KBN	C.CAPACITOR CH 25V 0.047U	1	
C3877	ECUX1E104KBN	C.CAPACITOR CH 25V 0.1U	1	
C3878	ECUX1H330JCV	C.CAPACITOR CH 50V 33P	1	
C3879	ECUX1H271JCV	C.CAPACITOR CH 50V 270P	1	
C3880	ECUX1H220JCV	C.CAPACITOR CH 50V 22P	1	
C3881	ECUX1H680JCV	C.CAPACITOR CH 50V 68P	1	
C3882	ECUX1H070DCV	C.CAPACITOR CH 50V 7P	1	
C3883	ECUX1H121JCV	C.CAPACITOR CH 50V 120P	1	
C3885	ECUX1H100DCV	C.CAPACITOR CH 50V 10P	1	
C3890	ECUX1E104ZFV	C.CAPACITOR CH 25V 0.1U	1	
C3893-95	ECUX1E104ZFV	C.CAPACITOR CH 25V 0.1U	3	
C3900	ECEV1CV100Q	E.CAPACITOR CH 16V 10U	1	
C3901	ECUX1E104ZFV	C.CAPACITOR CH 25V 0.1U	1	
C3902	ECEV1CV100Q	E.CAPACITOR CH 16V 10U	1	
C3903	ECUX1E104ZFV	C.CAPACITOR CH 25V 0.1U	1	
C3904	ECUX1H020CCV	C.CAPACITOR CH 50V 2P	1	
C3905	ECUX1H221JCV	C.CAPACITOR CH 50V 220P	1	
C3906	ECUX1H560JCV	C.CAPACITOR CH 50V 56P	1	

Ref.No.	Part No.	Part Name & Description	Pcs	Remarks
C3907	ECUX1H101JCV	C.CAPACITOR CH 50V 100P	1	
C3910,11	ECUX1E104ZFV	C.CAPACITOR CH 25V 0.1U	2	
C3914	ECUX1E104ZFV	C.CAPACITOR CH 25V 0.1U	1	
C3915	ECUX1H390JCV	C.CAPACITOR CH 50V 39P	1	
C3918-20	ECUX1E104ZFV	C.CAPACITOR CH 25V 0.1U	3	
C3921,22	ECUX1E104KBN	C.CAPACITOR CH 25V 0.1U	2	
C3924	ECUX1H103KBV	C.CAPACITOR CH 50V 0.01U	1	
C3925,26	ECUX1E104ZFV	C.CAPACITOR CH 25V 0.1U	2	
C3927	ECUX1H470JCV	C.CAPACITOR CH 50V 47P	1	
C3928	ECUX1E104KBN	C.CAPACITOR CH 25V 0.1U	1	
C3929,30	ECUX1E104ZFV	C.CAPACITOR CH 25V 0.1U	2	
C3931	ECUX1H220JCV	C.CAPACITOR CH 50V 22P	1	
C3932	ECUX1H020CCV	C.CAPACITOR CH 50V 2P	1	
C3933,34	ECUX1E104ZFV	C.CAPACITOR CH 25V 0.1U	2	
C3935	ECUX1H150JCV	C.CAPACITOR CH 50V 15P	1	
C3936	ECUX1H220JCV	C.CAPACITOR CH 50V 22P	1	
C3937,38	ECUX1H470JCV	C.CAPACITOR CH 50V 47P	2	
C3939	ECUX1H220JCV	C.CAPACITOR CH 50V 22P	1	
C3940	ECEV1CV100Q	E.CAPACITOR CH 16V 10U	1	
C3941	ECUX1E104ZFV	C.CAPACITOR CH 25V 0.1U	1	
C3942	ECUX1H102JCV	C.CAPACITOR CH 50V 1000P	1	
C3943	ECUX1H821JCV	C.CAPACITOR CH 50V 820P	1	
C3944	ECUX1E104ZFV	C.CAPACITOR CH 25V 0.1U	1	
C3945	ECUX1H560JCV	C.CAPACITOR CH 50V 56P	1	
C3946	ECUX1H101JCV	C.CAPACITOR CH 50V 100P	1	
C3950	ECUX1E104ZFV	C.CAPACITOR CH 25V 0.1U	1	
C3951	ECUX1H470JCV	C.CAPACITOR CH 50V 47P	1	
C3952,53	ECUX1E104ZFV	C.CAPACITOR CH 25V 0.1U	2	
C3954	ECUX1H180JCV	C.CAPACITOR CH 50V 18P	1	
C3955	ECUX1H121JCV	C.CAPACITOR CH 50V 120P	1	
C3956	ECUX1H120JCV	C.CAPACITOR CH 50V 12P	1	
C3957,58	ECUX1E104ZFV	C.CAPACITOR CH 25V 0.1U	2	
C3959	ECUX1H330JCV	C.CAPACITOR CH 50V 33P	1	
C3960,61	ECUX1E104ZFV	C.CAPACITOR CH 25V 0.1U	2	
C3962	ECUX1H330JCV	C.CAPACITOR CH 50V 33P	1	
C3963-65	ECUX1E104ZFV	C.CAPACITOR CH 25V 0.1U	3	
C3966	ECUX1H820JCV	C.CAPACITOR CH 50V 82P	1	
C3990	ECUX1H470JCV	C.CAPACITOR CH 50V 47P	1	
C3991	ECUX1H220JCV	C.CAPACITOR CH 50V 22P	1	
C3992	ECUX1E104ZFV	C.CAPACITOR CH 25V 0.1U	1	
C3993	ECUX1H390JCV	C.CAPACITOR CH 50V 39P	1	
C3994,95	ECUX1E104ZFV	C.CAPACITOR CH 25V 0.1U	2	
C3996	ECUX1H070DCV	C.CAPACITOR CH 50V 7P	1	
C3997	ECUX1E104ZFV	C.CAPACITOR CH 25V 0.1U	1	
D3070	MA335	DIODE	1	
D3160	M1MA152K	DIODE	1	
D3260	M1MA152K	DIODE	1	
D3550-52	MA701A	DIODE	3	
D3650	MA152WK	DIODE	1	
D3651	MA717	DIODE	1	
D3800,01	MA335	DIODE	2	
D3810,11	M1MA152K	DIODE	2	
D3950	M1MA152K	DIODE	1	
D3960,61	M1MA152K	DIODE	2	
FL3010-13	VLF1016A223	FILTER	4	
FL3700	VLF1294	FILTER	1	
FL3701,02	VLF1295	FILTER	2	
FL3900	VLF1016A223	FILTER	1	
FL3901	VLF1462	FILTER	1	
IC3010	NJM78L09UA	IC	1	
IC3011	NJM78L05UA	IC	1	
IC3012	NJM79L05UA	IC	1	
IC3013	NJM78L09UA	IC	1	
IC3014	NJM78L05UA	IC	1	
IC3015	NJM79L05UA	IC	1	
IC3016	NJM79L09UA	IC	1	
IC3050	SLA7220F5A	IC	1	
IC3051	EPM7128STC15	IC	1	BLANK ROM
ID3051	VVVSI3141		1	SOFTWARE
IC3070	MC74HC125AF	IC	1	
IC3071	NE521D	IC	1	
IC3072	MC74HC4053F	IC	1	

Ref.No.	Part No.	Part Name & Description	Pcs	Remarks
IC3073	NJM084M	IC	1	
IC3074	MC74HC4053F	IC	1	
IC3100	UPD65650J203	IC	1	
IC3101-03	SN74LS221NS	IC	3	
IC3104,05	SN74LS04NS	IC	2	
IC3106	MC74HC00AF	IC	1	
IC3109	D485505G25	IC	1	
IC3111	MC74HC574AF	IC	1	
IC3112	UPD42280G3	IC	1	
IC3160	MC74HC74AF	IC	1	
IC3161	74F112SJ	IC	1	
IC3162	MC74HC86AF	IC	1	
IC3163	MC74HC02AF	IC	1	
IC3164	SN74LS123NS	IC	1	
IC3165	SN74LS221NS	IC	1	
IC3166	SN74LS05NS	IC	1	
IC3167-69	MC74HC574AF	IC	3	
IC3170	SN74AS244AN	IC	1	
IC3171	NJM084M	IC	1	
IC3172	DAC10GS	IC	1	
IC3200	UPD65650J203	IC	1	
IC3202	SN74LS221NS	IC	1	
IC3250	MC74HC125AF	IC	1	
IC3260	NJM082BM	IC	1	
IC3261	74F08SJ	IC	1	
IC3262	SN74AS74ANS	IC	1	
IC3263	74F574SJ	IC	1	
IC3264,65	SN74AS244AN	IC	2	
IC3280-82	MC74HC574AF	IC	3	
IC3283	DAC10GS	IC	1	
IC3284	NJM082BM	IC	1	
IC3300,01	THCT574AF	IC	2	
IC3302	T74HCT541AF	IC	1	
IC3303,04	THCT574AF	IC	2	
IC3330,31	SN74AS244AN	IC	2	
IC3340	EPM7128STC15	IC	1	BLANK ROM
ID3340	VVVSI3141		1	SOFTWARE
IC3350	MB87D132	IC	1	
IC3370	L7A1519	IC	1	
IC3371	EPM7128STC15	IC	1	BLANK ROM
ID3371	VVVSI3141		1	SOFTWARE
IC3372-74	D485505G25	IC	3	
IC3430	74ALS541SJ	IC	1	
IC3432-34	MC10H124M	IC	3	
IC3435	74ALS541SJ	IC	1	
IC3436	MC10H124M	IC	1	
IC3437,38	74F244SJ	IC	2	
IC3439,40	D485505G25	IC	2	
IC3500,01	SN74S1051NS	IC	2	
IC3502	74F541SJ	IC	1	
IC3503	74F245SJ	IC	1	
IC3504,05	74F541SJ	IC	2	
IC3506,07	UPD71055GB	IC	2	
IC3508,09	THCT574AF	IC	2	
IC3510,11	SN74S1051NS	IC	2	
IC3550,51	D485505G25	IC	2	
IC3552	CG46183-104	IC	1	
IC3581-84	D485505G25	IC	4	
IC3585,86	THCT574AF	IC	2	
IC3587	EPM7128STC15	IC	1	BLANK ROM
ID3587	VVVSI3141		1	SOFTWARE
IC3588,89	TLCX244FT	IC	2	
IC3591-93	TVHT244FT	IC	3	
IC3595	TVHT244FT	IC	1	
IC3596	XC62AP3002P	IC	1	
IC3600	AN78N09	IC	1	
IC3601	AN78N05	IC	1	
IC3602	AN79N09	IC	1	
IC3603	AN78N09	IC	1	
IC3604	NJM78L05UA	IC	1	
IC3605	NJM79L05UA	IC	1	
IC3606	AN79N09	IC	1	
IC3650	AN91A12S	IC	1	
IC3651	NE521D	IC	1	
IC3700	ADV7123KST50	IC	1	

Ref.No.	Part No.	Part Name & Description	Pcs	Remarks
IC3702-04	LT1228CS8	IC	3	
IC3801	DAC10GS	IC	1	
IC3802	NJM082BM	IC	1	
IC3804	MC74HC4053F	IC	1	
IC3805	M51272FP	IC	1	
IC3900	LT1228CS8	IC	1	
IC3901	NJM2534V	IC	1	
IC3902	DAC10GS	IC	1	
IC3903	NJM082BM	IC	1	
IC3904	AD828AR	IC	1	
IC3990	NJM2534V	IC	1	
IC3996	LT1228CS8	IC	1	
IC3997	CXD1175AM	IC	1	
IC3998	NJM78L05UA	IC	1	
L3001-07	VLP0133	COIL	7	
L3071	VLQ0163J221	COIL 220UH	1	
L3550	VLP0133	COIL	1	
L3650	VLQ0163J680	COIL 68UH	1	
L3651	VLQ0163J221	COIL 220UH	1	
L3700	VLQ0163J220	COIL 22UH	1	
L3701	VLQ0576	COIL	1	
L3703	VLQ0163J220	COIL 22UH	1	
L3704	VLQ0163J100	COIL 10UH	1	
L3707	VLQ0163J6R8	COIL 6.8UH	1	
L3708	VLQ0163J2R7	COIL 2.7UH	1	
L3711	VLQ0163J6R8	COIL 6.8UH	1	
L3712	VLQ0163J2R7	COIL 2.7UH	1	
L3800-02	VLQ0163J220	COIL 22UH	3	
L3803	VLQ0163J181	COIL 180UH	1	
L3804	VLQ0163J560	COIL 56UH	1	
L3805-07	VLQ0163J470	COIL 47UH	3	
L3808	VLQ0163J270	COIL 27UH	1	
L3809	VLQ0163J6R8	COIL 6.8UH	1	
L3810	VLQ0163J5R6	COIL 5.6UH	1	
L3900	VLQ0163J100	COIL 10UH	1	
L3901,02	VLQ0163J220	COIL 22UH	2	
L3950	VLQ0163J470	COIL 47UH	1	
L3951,52	VLQ0163J560	COIL 56UH	2	
L3990	VLQ0163J180	COIL 18UH	1	
L3992	VLQ0163J390	COIL 39UH	1	
L3995	VLQ0163J150	COIL 15UH	1	
L3997	VLQ0319K101	COIL 100UH	1	
P3001,02	VJP3454B096	CONNECTOR (MALE)	2	
P3370	VJP1233T	CONNECTOR (MALE) 6P	1	
Q3070	MSB709-R	TRANSISTOR	1	
Q3071,72	2SK608-R	TRANSISTOR	2	
Q3700	MSD601-R	TRANSISTOR	1	
Q3701	MSB709-R	TRANSISTOR	1	
Q3702,03	MSD601-R	TRANSISTOR	2	
Q3704	MSB709-R	TRANSISTOR	1	
Q3707-09	MSB709-R	TRANSISTOR	3	
Q3710,11	MSD601-R	TRANSISTOR	2	
Q3712	MSB709-R	TRANSISTOR	1	
Q3715,16	MSB709-R	TRANSISTOR	2	
Q3717	MSD601-R	TRANSISTOR	1	
Q3718,19	2SB709A-R	TRANSISTOR	2	
Q3720	MSD602-R	TRANSISTOR	1	
Q3721	MSD601-R	TRANSISTOR	1	
Q3722	MSB709-R	TRANSISTOR	1	
Q3723	MSD601-R	TRANSISTOR	1	
Q3724	2SA1532-C	TRANSISTOR	1	
Q3800	MSB709-R	TRANSISTOR	1	
Q3801	MSC2295-B	TRANSISTOR	1	
Q3802	MSB709-R	TRANSISTOR	1	
Q3803	MSC2295-B	TRANSISTOR	1	
Q3804,05	MSB709-R	TRANSISTOR	2	
Q3806	MSC2295-B	TRANSISTOR	1	
Q3807	MSB709-R	TRANSISTOR	1	
Q3808,09	MSD601-R	TRANSISTOR	2	
Q3814	MSD601-R	TRANSISTOR	1	
Q3900,01	MSD601-R	TRANSISTOR	2	
Q3902	MSB709-R	TRANSISTOR	1	

Ref.No.	Part No.	Part Name & Description	Pcs	Remarks
Q3903	2SB709A-R	TRANSISTOR	1	
Q3904,05	2SA1532-C	TRANSISTOR	2	
Q3906,07	MSB709-R	TRANSISTOR	2	
Q3908	2SA1532-C	TRANSISTOR	1	
Q3950	2SC2404-D	TRANSISTOR	1	
Q3951,52	MSB709-R	TRANSISTOR	2	
Q3953	MSD601-R	TRANSISTOR	1	
Q3954-56	MSB709-R	TRANSISTOR	3	
Q3957-60	MSD601-R	TRANSISTOR	4	
Q3990	2SA1532-C	TRANSISTOR	1	
Q3991	2SB709A-R	TRANSISTOR	1	
Q3995	2SB709A-R	TRANSISTOR	1	
Q3996	2SA1532-C	TRANSISTOR	1	
Q3997	2SB709A-R	TRANSISTOR	1	
QR3800,01	MUN2213	TRANSISTOR-RESISTOR	2	
QR3900,01	MUN2213	TRANSISTOR-RESISTOR	2	
QR3902	MUN2112	TRANSISTOR-RESISTOR	1	
R3011	ERJ3GEYG102	M.RESISTOR CH 1/16W 1K	1	
R3017	ERJ3GEYJ681	M.RESISTOR CH 1/16W 680	1	
R3018	ERJ3GEYJ391	M.RESISTOR CH 1/16W 390	1	
R3019	ERJ3GEY0R00	M.RESISTOR CH 1/16W 0	1	
R3022	ERJ3GEYJ470	M.RESISTOR CH 1/16W 47	1	
R3023	ERJ3GEYG102	M.RESISTOR CH 1/16W 1K	1	
R3024	ERJ3GEY0R00	M.RESISTOR CH 1/16W 0	1	
R3025	ERJ3GEYJ271	M.RESISTOR CH 1/16W 270	1	
R3026	ERJ3GEYG102	M.RESISTOR CH 1/16W 1K	1	
R3027	ERJ3GEYJ124	M.RESISTOR CH 1/16W 120K	1	
R3029	ERJ3GEYJ392	M.RESISTOR CH 1/16W 3.9K	1	
R3032	ERJ3GEYG472	M.RESISTOR CH 1/16W 4.7K	1	
R3033	ERJ3GEYJ470	M.RESISTOR CH 1/16W 47	1	
R3034	ERJ3GEY0R00	M.RESISTOR CH 1/16W 0	1	
R3035	ERJ3GEYJ221	M.RESISTOR CH 1/16W 220	1	
R3036	ERJ3GEYJ222	M.RESISTOR CH 1/16W 2.2K	1	
R3037	ERJ3GEYJ103	M.RESISTOR CH 1/16W 10K	1	
R3038,39	ERJ3GEYG332	M.RESISTOR CH 1/16W 3.3K	2	
R3040	ERJ3GEY0R00	M.RESISTOR CH 1/16W 0	1	
R3043	ERJ3GEYJ222	M.RESISTOR CH 1/16W 2.2K	1	
R3044,45	ERJ3GEYG102	M.RESISTOR CH 1/16W 1K	2	
R3046	ERJ3GEY0R00	M.RESISTOR CH 1/16W 0	1	
R3050-53	ERJ3GEYG102	M.RESISTOR CH 1/16W 1K	4	
R3054-57	ERJ3GEYJ101	M.RESISTOR CH 1/16W 100	4	
R3059	ERJ3GEYJ101	M.RESISTOR CH 1/16W 100	1	
R3061,62	ERJ3GEYJ101	M.RESISTOR CH 1/16W 100	2	
R3064	ERJ3GEYJ101	M.RESISTOR CH 1/16W 100	1	
R3065-67	ERJ3GEYG102	M.RESISTOR CH 1/16W 1K	3	
R3068	ERJ3GEYG471	M.RESISTOR CH 1/16W 470	1	
R3070	ERJ3GEYJ153	M.RESISTOR CH 1/16W 15K	1	
R3071	ERJ3GEYJ333	M.RESISTOR CH 1/16W 33K	1	
R3072	ERJ3GEYG102	M.RESISTOR CH 1/16W 1K	1	
R3073	ERJ3GEYJ103	M.RESISTOR CH 1/16W 10K	1	
R3074	ERJ3GEYJ222	M.RESISTOR CH 1/16W 2.2K	1	
R3075	ERJ3GEYG152	M.RESISTOR CH 1/16W 1.5K	1	
R3076	ERJ3GEYJ821	M.RESISTOR CH 1/16W 820	1	
R3077	ERJ3GEYJ223	M.RESISTOR CH 1/16W 22K	1	
R3078	ERJ3GEYJ333	M.RESISTOR CH 1/16W 33K	1	
R3079	ERJ3GEYJ105	M.RESISTOR CH 1/16W 1M	1	
R3080	ERJ3GEYJ823	M.RESISTOR CH 1/16W 82K	1	
R3081,82	ERJ3GEYG102	M.RESISTOR CH 1/16W 1K	2	
R3083	ERJ3GEYJ563	M.RESISTOR CH 1/16W 56K	1	
R3084	ERJ3GEYJ183	M.RESISTOR CH 1/16W 18K	1	
R3085	ERJ3GEYJ333	M.RESISTOR CH 1/16W 33K	1	
R3086,87	ERJ3GEYJ563	M.RESISTOR CH 1/16W 56K	2	
R3088,89	ERJ3GEYG332	M.RESISTOR CH 1/16W 3.3K	2	
R3090	ERJ3GEYG102	M.RESISTOR CH 1/16W 1K	1	
R3091	ERJ3GEYJ101	M.RESISTOR CH 1/16W 100	1	
R3092,93	ERJ3GEYG102	M.RESISTOR CH 1/16W 1K	2	
R3094	ERJ3GEYJ333	M.RESISTOR CH 1/16W 33K	1	
R3100-08	ERJ3GEYG102	M.RESISTOR CH 1/16W 1K	9	
R3112	ERJ3GEY0R00	M.RESISTOR CH 1/16W 0	1	
R3113-23	ERJ3GEYG102	M.RESISTOR CH 1/16W 1K	11	
R3125,26	ERJ3GEYG102	M.RESISTOR CH 1/16W 1K	2	
R3127	ERJ3GEYJ563	M.RESISTOR CH 1/16W 56K	1	
R3128	ERJ3GEYG102	M.RESISTOR CH 1/16W 1K	1	

Ref.No.	Part No.	Part Name & Description	Pcs	Remarks
R3129,30	ERJ3GEYJ222	M.RESISTOR CH 1/16W 2.2K	2	
R3131	ERJ3GEYG822	M.RESISTOR CH 1/16W 8.2K	1	
R3132	ERJ3GEYJ153	M.RESISTOR CH 1/16W 15K	1	
R3133,34	ERJ6RBD331	M.RESISTOR CH 1/10W 330	2	
R3137	ERJ3GEYG102	M.RESISTOR CH 1/16W 1K	1	
R3139	ERJ3GEYG102	M.RESISTOR CH 1/16W 1K	1	
R3140	ERJ3GEY0R00	M.RESISTOR CH 1/16W 0	1	
R3142	ERJ3GEYG102	M.RESISTOR CH 1/16W 1K	1	
R3143,44	ERJ3GEYJ272	M.RESISTOR CH 1/16W 2.7K	2	
R3158	ERJ3GEYG102	M.RESISTOR CH 1/16W 1K	1	
R3160,61	ERJ3GEYG102	M.RESISTOR CH 1/16W 1K	2	
R3162	ERJ3GEYJ101	M.RESISTOR CH 1/16W 100	1	
R3163	ERJ3GEYG102	M.RESISTOR CH 1/16W 1K	1	
R3164,65	ERJ6RBD822	M.RESISTOR CH 1/10W 8.2K	2	
R3166	ERJ6RBD222	M.RESISTOR CH 1/10W 2.2K	1	
R3167	ERJ6RBD512	M.RESISTOR CH 1/10W 5.1K	1	
R3168	ERJ3GEYJ101	M.RESISTOR CH 1/16W 100	1	
R3169	ERJ3GEYG152	M.RESISTOR CH 1/16W 1.5K	1	
R3170	ERJ3GEYJ823	M.RESISTOR CH 1/16W 82K	1	
R3171,72	ERJ3GEYJ333	M.RESISTOR CH 1/16W 33K	2	
R3173	ERJ3GEYJ103	M.RESISTOR CH 1/16W 10K	1	
R3174	ERJ3GEYJ105	M.RESISTOR CH 1/16W 1M	1	
R3175	ERJ3GEYJ391	M.RESISTOR CH 1/16W 390	1	
R3176	ERJ3GEYJ103	M.RESISTOR CH 1/16W 10K	1	
R3177,78	ERJ3GEYG472	M.RESISTOR CH 1/16W 4.7K	2	
R3179	ERJ3GEYJ333	M.RESISTOR CH 1/16W 33K	1	
R3180	ERJ3GEYJ681	M.RESISTOR CH 1/16W 680	1	
R3181	ERJ3GEYJ821	M.RESISTOR CH 1/16W 820	1	
R3182	ERJ3GEYJ183	M.RESISTOR CH 1/16W 18K	1	
R3183	ERJ3GEYJ101	M.RESISTOR CH 1/16W 100	1	
R3184,85	ERJ3GEYJ272	M.RESISTOR CH 1/16W 2.7K	2	
R3200	ERJ3GEY0R00	M.RESISTOR CH 1/16W 0	1	
R3202	ERJ3GEY0R00	M.RESISTOR CH 1/16W 0	1	
R3208-14	ERJ3GEYG102	M.RESISTOR CH 1/16W 1K	7	
R3216	ERJ3GEY0R00	M.RESISTOR CH 1/16W 0	1	
R3217-28	ERJ3GEYG102	M.RESISTOR CH 1/16W 1K	12	
R3230,31	ERJ3GEYJ272	M.RESISTOR CH 1/16W 2.7K	2	
R3232-34	ERJ3GEYG102	M.RESISTOR CH 1/16W 1K	3	
R3235	ERJ3GEYJ101	M.RESISTOR CH 1/16W 100	1	
R3237	ERJ3GEYG102	M.RESISTOR CH 1/16W 1K	1	
R3238	ERJ3GEYJ181	M.RESISTOR CH 1/16W 180	1	
R3240	ERJ3GEYG472	M.RESISTOR CH 1/16W 4.7K	1	
R3241	ERJ3GEYJ181	M.RESISTOR CH 1/16W 180	1	
R3242	ERJ6RBD822	M.RESISTOR CH 1/10W 8.2K	1	
R3243	ERJ3GEYG102	M.RESISTOR CH 1/16W 1K	1	
R3244	ERJ3GEYG471	M.RESISTOR CH 1/16W 470	1	
R3246	ERJ3GEYJ681	M.RESISTOR CH 1/16W 680	1	
R3248,49	ERJ3GEYJ272	M.RESISTOR CH 1/16W 2.7K	2	
R3257,58	ERJ3GEYG102	M.RESISTOR CH 1/16W 1K	2	
R3260	ERJ3GEYG471	M.RESISTOR CH 1/16W 470	1	
R3261	ERJ3GEYJ333	M.RESISTOR CH 1/16W 33K	1	
R3262-64	ERJ3GEYJ103	M.RESISTOR CH 1/16W 10K	3	
R3265	ERJ3GEYJ105	M.RESISTOR CH 1/16W 1M	1	
R3266	ERJ3GEYG102	M.RESISTOR CH 1/16W 1K	1	
R3267-69	ERJ3GEYJ101	M.RESISTOR CH 1/16W 100	3	
R3270	ERJ3GEYG102	M.RESISTOR CH 1/16W 1K	1	
R3271	ERJ3GEYJ101	M.RESISTOR CH 1/16W 100	1	
R3280,81	ERJ3GEYG102	M.RESISTOR CH 1/16W 1K	2	
R3282,83	ERJ3GEYG472	M.RESISTOR CH 1/16W 4.7K	2	
R3284	ERJ3GEYJ681	M.RESISTOR CH 1/16W 680	1	
R3285	ERJ3GEYG682	M.RESISTOR CH 1/16W 6.8K	1	
R3286	ERJ3GEYJ473	M.RESISTOR CH 1/16W 47K	1	
R3287,88	ERJ3GEYJ333	M.RESISTOR CH 1/16W 33K	2	
R3289	ERJ3GEYG102	M.RESISTOR CH 1/16W 1K	1	
R3291	ERJ3GEYG152	M.RESISTOR CH 1/16W 1.5K	1	
R3292	ERJ3GEYJ823	M.RESISTOR CH 1/16W 82K	1	
R3293	ERJ3GEYJ104	M.RESISTOR CH 1/16W 100K	1	
R3294	ERJ3GEYJ105	M.RESISTOR CH 1/16W 1M	1	
R3295	ERJ3GEYG102	M.RESISTOR CH 1/16W 1K	1	
R3296	ERJ3GEYJ272	M.RESISTOR CH 1/16W 2.7K	1	
R3300-13	ERJ3GEYJ103	M.RESISTOR CH 1/16W 10K	14	
R3315,16	ERJ3GEYJ103	M.RESISTOR CH 1/16W 10K	2	
R3317	ERJ3GEYG102	M.RESISTOR CH 1/16W 1K	1	
R3318-21	ERJ3GEYJ103	M.RESISTOR CH 1/16W 10K	4	
R3324	ERJ3GEYG102	M.RESISTOR CH 1/16W 1K	1	

Ref.No.	Part No.	Part Name & Description	Pcs	Remarks
R3325	ERJ3GEYJ101	M.RESISTOR CH 1/16W 100	1	
R3326	ERJ3GEYG102	M.RESISTOR CH 1/16W 1K	1	
R3327,28	ERJ3GEYJ101	M.RESISTOR CH 1/16W 100	2	
R3330	ERJ3GEYJ101	M.RESISTOR CH 1/16W 100	1	
R3332-34	ERJ3GEYJ101	M.RESISTOR CH 1/16W 100	3	
R3340,41	ERJ3GEYG102	M.RESISTOR CH 1/16W 1K	2	
R3342	ERJ3GEYJ101	M.RESISTOR CH 1/16W 100	1	
R3343	ERJ3GEY0R00	M.RESISTOR CH 1/16W 0	1	
R3344	ERJ3GEYJ222	M.RESISTOR CH 1/16W 2.2K	1	
R3345	ERJ3GEYJ101	M.RESISTOR CH 1/16W 100	1	
R3346	ERJ3GEYG102	M.RESISTOR CH 1/16W 1K	1	
R3351	ERJ3GEY0R00	M.RESISTOR CH 1/16W 0	1	
R3373	ERJ3GEYJ101	M.RESISTOR CH 1/16W 100	1	
R3374-86	ERJ3GEYG102	M.RESISTOR CH 1/16W 1K	13	
R3388-90	ERJ3GEYG102	M.RESISTOR CH 1/16W 1K	3	
R3391,92	ERJ3GEYJ101	M.RESISTOR CH 1/16W 100	2	
R3393,94	ERDS2TJ102	C.RESISTOR 1/4W 1K	2	
R3395-98	ERJ3GEYG102	M.RESISTOR CH 1/16W 1K	4	
R3400-07	ERJ3GEYJ103	M.RESISTOR CH 1/16W 10K	8	
R3409-16	ERJ3GEYJ103	M.RESISTOR CH 1/16W 10K	8	
R3421,22	ERJ3GEYJ103	M.RESISTOR CH 1/16W 10K	2	
R3428,29	ERJ3GEYJ681	M.RESISTOR CH 1/16W 680	2	
R3430	ERJ3GEYJ101	M.RESISTOR CH 1/16W 100	1	
R3432-39	ERJ3GEYJ560	M.RESISTOR CH 1/16W 56	8	
R3441	ERJ3GEY0R00	M.RESISTOR CH 1/16W 0	1	
R3442,43	ERJ3GEYJ560	M.RESISTOR CH 1/16W 56	2	
R3444-67	ERJ3GEYJ681	M.RESISTOR CH 1/16W 680	24	
R3468-91	ERJ3GEYJ330	M.RESISTOR CH 1/16W 33	24	
R3492	ERJ3GEYJ101	M.RESISTOR CH 1/16W 100	1	
R3493-97	ERJ3GEYJ560	M.RESISTOR CH 1/16W 56	5	
R3498,99	ERJ3GEYJ330	M.RESISTOR CH 1/16W 33	2	
R3500-02	ERJ3GEYJ101	M.RESISTOR CH 1/16W 100	3	
R3503	ERJ3GEY0R00	M.RESISTOR CH 1/16W 0	1	
R3506-08	ERJ3GEYG102	M.RESISTOR CH 1/16W 1K	3	
R3510-31	ERJ3GEYJ103	M.RESISTOR CH 1/16W 10K	22	
R3536-38	ERJ3GEY0R00	M.RESISTOR CH 1/16W 0	3	
R3541,42	ERJ3GEY0R00	M.RESISTOR CH 1/16W 0	2	
R3543,44	ERJ3GEYG102	M.RESISTOR CH 1/16W 1K	2	
R3550	ERJ3GEYG102	M.RESISTOR CH 1/16W 1K	1	
R3578-80	ERJ3GEYG102	M.RESISTOR CH 1/16W 1K	3	
R3581,82	ERJ3GEYJ101	M.RESISTOR CH 1/16W 100	2	
R3584-86	ERJ3GEYJ101	M.RESISTOR CH 1/16W 100	3	
R3588-90	ERJ3GEYJ101	M.RESISTOR CH 1/16W 100	3	
R3598	ERJ3GEY0R00	M.RESISTOR CH 1/16W 0	1	
R3650	ERJ3GEYG102	M.RESISTOR CH 1/16W 1K	1	
R3651-53	ERJ3GEYJ222	M.RESISTOR CH 1/16W 2.2K	3	
R3654	ERJ3GEYG332	M.RESISTOR CH 1/16W 3.3K	1	
R3655	ERJ3GEYJ221	M.RESISTOR CH 1/16W 220	1	
R3656,57	ERJ3GEYG822	M.RESISTOR CH 1/16W 8.2K	2	
R3658	ERJ3GEYJ103	M.RESISTOR CH 1/16W 10K	1	
R3659	ERJ3GEYJ684	M.RESISTOR CH 1/16W 680K	1	
R3660	ERJ3GEYJ104	M.RESISTOR CH 1/16W 100K	1	
R3661	ERJ3GEYJ221	M.RESISTOR CH 1/16W 220	1	
R3662	ERJ3GEYJ222	M.RESISTOR CH 1/16W 2.2K	1	
R3663	ERJ3GEYJ184	M.RESISTOR CH 1/16W 180K	1	
R3664	ERJ3GEYJ222	M.RESISTOR CH 1/16W 2.2K	1	
R3665	ERJ3GEYJ333	M.RESISTOR CH 1/16W 33K	1	
R3666	ERJ3GEYJ560	M.RESISTOR CH 1/16W 56	1	
R3667	ERJ3GEYJ222	M.RESISTOR CH 1/16W 2.2K	1	
R3668	ERJ3GEYJ101	M.RESISTOR CH 1/16W 100	1	
R3669	ERJ3GEYJ560	M.RESISTOR CH 1/16W 56	1	
R3700	ERJ6RBD561	M.RESISTOR CH 1/10W 560	1	
R3701,02	ERJ3GEYJ151	M.RESISTOR CH 1/16W 150	2	
R3703	ERJ3GEYJ222	M.RESISTOR CH 1/16W 2.2K	1	
R3704,05	ERJ3RBD331	M.RESISTOR CH 1/16W 330	2	
R3706	ERJ3GEYJ222	M.RESISTOR CH 1/16W 2.2K	1	
R3707	ERJ3GEYJ101	M.RESISTOR CH 1/16W 100	1	
R3709	ERJ3GEYJ151	M.RESISTOR CH 1/16W 150	1	
R3710	ERJ3GEYJ101	M.RESISTOR CH 1/16W 100	1	
R3711	ERJ3GEYG102	M.RESISTOR CH 1/16W 1K	1	
R3712	ERJ3GEYJ124	M.RESISTOR CH 1/16W 120K	1	
R3713	ERJ3RBD201	M.RESISTOR CH 1/16W 200	1	
R3715	ERJ3GEYG471	M.RESISTOR CH 1/16W 470	1	
R3716	ERJ3GEYJ222	M.RESISTOR CH 1/16W 2.2K	1	
R3717,18	ERJ3GEYJ151	M.RESISTOR CH 1/16W 150	2	

Ref.No.	Part No.	Part Name & Description	Pcs	Remarks
R3719	ERJ3GEYJ222	M.RESISTOR CH 1/16W 2.2K	1	
R3720,21	ERJ3RBD471	M.RESISTOR CH 1/16W 470	2	
R3722	ERJ3GEYJ222	M.RESISTOR CH 1/16W 2.2K	1	
R3723	ERJ3GEYJ101	M.RESISTOR CH 1/16W 100	1	
R3724	ERJ3GEYJ221	M.RESISTOR CH 1/16W 220	1	
R3725	ERJ3GEYJ101	M.RESISTOR CH 1/16W 100	1	
R3726	ERJ6GEYG102	M.RESISTOR CH 1/10W 1K	1	
R3727	ERJ3GEYJ681	M.RESISTOR CH 1/16W 680	1	
R3728	ERJ3GEYJ391	M.RESISTOR CH 1/16W 390	1	
R3729	ERJ3GEYJ222	M.RESISTOR CH 1/16W 2.2K	1	
R3730	ERJ3GEYJ681	M.RESISTOR CH 1/16W 680	1	
R3731	ERJ3GEYG102	M.RESISTOR CH 1/16W 1K	1	
R3732	ERJ3GEYJ821	M.RESISTOR CH 1/16W 820	1	
R3733	ERJ3GEYJ681	M.RESISTOR CH 1/16W 680	1	
R3734	ERJ3GEYG102	M.RESISTOR CH 1/16W 1K	1	
R3735	ERJ3GEYG471	M.RESISTOR CH 1/16W 470	1	
R3736	ERJ6GEYG102	M.RESISTOR CH 1/10W 1K	1	
R3737	ERJ3GEYJ181	M.RESISTOR CH 1/16W 180	1	
R3738	ERJ3GEYJ121	M.RESISTOR CH 1/16W 120	1	
R3739	ERJ3GEYJ820	M.RESISTOR CH 1/16W 82	1	
R3740	ERJ3GEYJ103	M.RESISTOR CH 1/16W 10K	1	
R3741	ERJ3GEYG102	M.RESISTOR CH 1/16W 1K	1	
R3744	ERJ3GEYJ470	M.RESISTOR CH 1/16W 47	1	
R3745,46	ERJ3GEYG102	M.RESISTOR CH 1/16W 1K	2	
R3747	ERJ3GEYJ222	M.RESISTOR CH 1/16W 2.2K	1	
R3748,49	ERJ3GEYJ151	M.RESISTOR CH 1/16W 150	2	
R3750	ERJ3GEYJ222	M.RESISTOR CH 1/16W 2.2K	1	
R3751,52	ERJ3RBD471	M.RESISTOR CH 1/16W 470	2	
R3753	ERJ3GEYJ222	M.RESISTOR CH 1/16W 2.2K	1	
R3754	ERJ3GEYJ101	M.RESISTOR CH 1/16W 100	1	
R3755	ERJ3GEYJ222	M.RESISTOR CH 1/16W 2.2K	1	
R3756	ERJ3GEYJ103	M.RESISTOR CH 1/16W 10K	1	
R3757,58	ERJ3GEYG332	M.RESISTOR CH 1/16W 3.3K	2	
R3761	ERJ3GEYJ681	M.RESISTOR CH 1/16W 680	1	
R3762	ERJ3GEYG102	M.RESISTOR CH 1/16W 1K	1	
R3763	ERJ3GEYJ821	M.RESISTOR CH 1/16W 820	1	
R3764	ERJ3GEYJ681	M.RESISTOR CH 1/16W 680	1	
R3765	ERJ3GEYG102	M.RESISTOR CH 1/16W 1K	1	
R3766	ERJ3GEYG471	M.RESISTOR CH 1/16W 470	1	
R3767	ERJ6GEYG102	M.RESISTOR CH 1/10W 1K	1	
R3768,69	ERJ3GEYJ121	M.RESISTOR CH 1/16W 120	2	
R3770	ERJ3GEYJ820	M.RESISTOR CH 1/16W 82	1	
R3771	ERJ3GEYJ103	M.RESISTOR CH 1/16W 10K	1	
R3772	ERJ3GEYG102	M.RESISTOR CH 1/16W 1K	1	
R3775	ERJ3GEYJ470	M.RESISTOR CH 1/16W 47	1	
R3776	ERJ3GEYJ222	M.RESISTOR CH 1/16W 2.2K	1	
R3777	ERJ3GEYJ221	M.RESISTOR CH 1/16W 220	1	
R3780	ERJ6GEY0R00	M.RESISTOR CH 1/10W 0	1	
R3781	ERJ3GEYJ681	M.RESISTOR CH 1/16W 680	1	
R3782	ERJ3GEYJ391	M.RESISTOR CH 1/16W 390	1	
R3783	ERJ3GEYJ222	M.RESISTOR CH 1/16W 2.2K	1	
R3784	ERJ3GEYJ221	M.RESISTOR CH 1/16W 220	1	
R3785	ERJ3GEYJ681	M.RESISTOR CH 1/16W 680	1	
R3786	ERJ3GEYJ391	M.RESISTOR CH 1/16W 390	1	
R3787	ERJ3GEYJ222	M.RESISTOR CH 1/16W 2.2K	1	
R3788	ERJ3GEYJ221	M.RESISTOR CH 1/16W 220	1	
R3797	ERJ3GEYJ333	M.RESISTOR CH 1/16W 33K	1	
R3798	ERJ6RBD151	M.RESISTOR CH 1/10W 150	1	
R3799	ERJ6RBD752	M.RESISTOR CH 1/10W 7.5K	1	
R3804	ERJ3GEYG471	M.RESISTOR CH 1/16W 470	1	
R3805,06	ERJ3GEYG472	M.RESISTOR CH 1/16W 4.7K	2	
R3807	ERJ3GEYG152	M.RESISTOR CH 1/16W 1.5K	1	
R3808	ERJ3GEYJ223	M.RESISTOR CH 1/16W 22K	1	
R3810	ERJ3GEYJ563	M.RESISTOR CH 1/16W 56K	1	
R3811	ERJ3GEYG822	M.RESISTOR CH 1/16W 8.2K	1	
R3812	ERJ3GEYG472	M.RESISTOR CH 1/16W 4.7K	1	
R3814	ERJ3GEYJ821	M.RESISTOR CH 1/16W 820	1	
R3815	ERJ3GEYJ181	M.RESISTOR CH 1/16W 180	1	
R3816	ERJ3GEYJ821	M.RESISTOR CH 1/16W 820	1	
R3817	ERJ3GEYG152	M.RESISTOR CH 1/16W 1.5K	1	
R3818	ERJ3GEYJ470	M.RESISTOR CH 1/16W 47	1	
R3819,20	ERJ3GEYG102	M.RESISTOR CH 1/16W 1K	2	
R3821	ERJ3GEYG152	M.RESISTOR CH 1/16W 1.5K	1	
R3822	ERJ3GEYG102	M.RESISTOR CH 1/16W 1K	1	
R3823	ERJ3GEYG152	M.RESISTOR CH 1/16W 1.5K	1	

Ref.No.	Part No.	Part Name & Description	Pcs	Remarks
R3824,25	ERJ3GEYG102	M.RESISTOR CH 1/16W 1K	2	
R3826,27	ERJ3GEYG152	M.RESISTOR CH 1/16W 1.5K	2	
R3828	ERJ3GEYJ330	M.RESISTOR CH 1/16W 33	1	
R3829	ERJ3GEYJ681	M.RESISTOR CH 1/16W 680	1	
R3830	ERJ3GEYG472	M.RESISTOR CH 1/16W 4.7K	1	
R3831	ERJ3GEYJ105	M.RESISTOR CH 1/16W 1M	1	
R3832	ERJ3GEYJ154	M.RESISTOR CH 1/16W 150K	1	
R3833	ERJ3GEYG152	M.RESISTOR CH 1/16W 1.5K	1	
R3834-36	ERJ3GEYJ333	M.RESISTOR CH 1/16W 33K	3	
R3837	ERJ3GEYG152	M.RESISTOR CH 1/16W 1.5K	1	
R3838	ERJ3GEYJ470	M.RESISTOR CH 1/16W 47	1	
R3839	ERJ3GEY0R00	M.RESISTOR CH 1/16W 0	1	
R3840-42	ERJ3GEYG102	M.RESISTOR CH 1/16W 1K	3	
R3843	ERJ3GEYJ181	M.RESISTOR CH 1/16W 180	1	
R3844	ERJ3GEYG152	M.RESISTOR CH 1/16W 1.5K	1	
R3845,46	ERJ3GEYG102	M.RESISTOR CH 1/16W 1K	2	
R3847	ERJ3GEYJ470	M.RESISTOR CH 1/16W 47	1	
R3848	ERJ3GEYG332	M.RESISTOR CH 1/16W 3.3K	1	
R3849,50	ERJ3GEYG102	M.RESISTOR CH 1/16W 1K	2	
R3851	ERJ3GEYJ470	M.RESISTOR CH 1/16W 47	1	
R3852	ERJ3GEYG332	M.RESISTOR CH 1/16W 3.3K	1	
R3867	ERJ3GEYG102	M.RESISTOR CH 1/16W 1K	1	
R3868	ERJ3GEYJ221	M.RESISTOR CH 1/16W 220	1	
R3872	ERJ3GEYG332	M.RESISTOR CH 1/16W 3.3K	1	
R3876	ERJ3GEY0R00	M.RESISTOR CH 1/16W 0	1	
R3878,79	ERJ6RBD301	M.RESISTOR CH 1/10W 300	2	
R3880	ERJ3GEYG332	M.RESISTOR CH 1/16W 3.3K	1	
R3881	ERJ3GEYJ562	M.RESISTOR CH 1/16W 5.6K	1	
R3882	ERJ3GEYG472	M.RESISTOR CH 1/16W 4.7K	1	
R3883	ERJ3GEYJ473	M.RESISTOR CH 1/16W 47K	1	
R3884	ERJ3GEYJ222	M.RESISTOR CH 1/16W 2.2K	1	
R3885	ERJ3GEYG332	M.RESISTOR CH 1/16W 3.3K	1	
R3886	ERJ3GEYJ562	M.RESISTOR CH 1/16W 5.6K	1	
R3887	ERJ3GEYG472	M.RESISTOR CH 1/16W 4.7K	1	
R3888	ERJ3GEYJ473	M.RESISTOR CH 1/16W 47K	1	
R3889	ERJ3GEYJ222	M.RESISTOR CH 1/16W 2.2K	1	
R3895	ERJ3GEYJ222	M.RESISTOR CH 1/16W 2.2K	1	
R3896,97	ERJ3GEYG332	M.RESISTOR CH 1/16W 3.3K	2	
R3898	ERJ3GEYJ103	M.RESISTOR CH 1/16W 10K	1	
R3899	ERJ3GEYJ221	M.RESISTOR CH 1/16W 220	1	
R3900	ERJ3GEYG102	M.RESISTOR CH 1/16W 1K	1	
R3901	ERJ3GEYJ104	M.RESISTOR CH 1/16W 100K	1	
R3902	ERJ3GEYJ151	M.RESISTOR CH 1/16W 150	1	
R3903,04	ERJ3GEYJ101	M.RESISTOR CH 1/16W 100	2	
R3905	ERJ3GEYJ222	M.RESISTOR CH 1/16W 2.2K	1	
R3906	ERJ3GEYJ103	M.RESISTOR CH 1/16W 10K	1	
R3907	ERJ6GEYG102	M.RESISTOR CH 1/10W 1K	1	
R3908	ERJ6RBD151	M.RESISTOR CH 1/10W 150	1	
R3909	ERJ3GEYJ470	M.RESISTOR CH 1/16W 47	1	
R3910,11	ERJ3GEYG472	M.RESISTOR CH 1/16W 4.7K	2	
R3912	ERJ3GEYG152	M.RESISTOR CH 1/16W 1.5K	1	
R3913	ERJ3GEYJ393	M.RESISTOR CH 1/16W 39K	1	
R3915,16	ERJ3GEYJ563	M.RESISTOR CH 1/16W 56K	2	
R3917	ERJ3GEYJ222	M.RESISTOR CH 1/16W 2.2K	1	
R3918	ERJ3GEYJ470	M.RESISTOR CH 1/16W 47	1	
R3919,20	ERJ3GEYG152	M.RESISTOR CH 1/16W 1.5K	2	
R3921	ERJ3GEYJ470	M.RESISTOR CH 1/16W 47	1	
R3922	ERJ3GEYG332	M.RESISTOR CH 1/16W 3.3K	1	
R3923	ERJ3GEYJ103	M.RESISTOR CH 1/16W 10K	1	
R3924	ERJ3GEYJ151	M.RESISTOR CH 1/16W 150	1	
R3925	ERJ3GEYJ562	M.RESISTOR CH 1/16W 5.6K	1	
R3926,27	ERJ6RBD821	M.RESISTOR CH 1/10W 820	2	
R3928,29	ERJ3GEYJ470	M.RESISTOR CH 1/16W 47	2	
R3930	ERJ3GEYJ563	M.RESISTOR CH 1/16W 56K	1	
R3931,32	ERJ6RBD821	M.RESISTOR CH 1/10W 820	2	
R3933	ERJ3GEYJ124	M.RESISTOR CH 1/16W 120K	1	
R3934,35	ERJ6RBD821	M.RESISTOR CH 1/10W 820	2	
R3936	VRE006610102	M.RESISTOR CH 1/10W 1K	1	
R3937	ERJ3GEYJ151	M.RESISTOR CH 1/16W 150	1	
R3938	ERJ3GEY0R00	M.RESISTOR CH 1/16W 0	1	
R3939	ERJ3GEYG102	M.RESISTOR CH 1/16W 1K	1	
R3940	ERJ3GEYG472	M.RESISTOR CH 1/16W 4.7K	1	
R3941	ERJ3GEYJ223	M.RESISTOR CH 1/16W 22K	1	
R3942,43	ERJ3GEYJ473	M.RESISTOR CH 1/16W 47K	2	
R3944	ERJ3GEYG472	M.RESISTOR CH 1/16W 4.7K	1	

Ref.No.	Part No.	Part Name & Description	Pcs	Remarks
R3945	ERJ3GEYJ223	M.RESISTOR CH 1/16W 22K	1	
R3946	ERJ3GEYJ563	M.RESISTOR CH 1/16W 56K	1	
R3947	ERJ3GEYJ392	M.RESISTOR CH 1/16W 3.9K	1	
R3948	ERJ3GEYJ681	M.RESISTOR CH 1/16W 680	1	
R3949	ERJ3GEYJ391	M.RESISTOR CH 1/16W 390	1	
R3950	ERJ3GEYG332	M.RESISTOR CH 1/16W 3.3K	1	
R3951	ERJ3GEYG472	M.RESISTOR CH 1/16W 4.7K	1	
R3952	ERJ3GEYJ153	M.RESISTOR CH 1/16W 15K	1	
R3953	ERJ3GEYJ821	M.RESISTOR CH 1/16W 820	1	
R3954	ERJ3GEYG472	M.RESISTOR CH 1/16W 4.7K	1	
R3955,56	ERJ3GEYJ221	M.RESISTOR CH 1/16W 220	2	
R3957	ERJ3GEYG102	M.RESISTOR CH 1/16W 1K	1	
R3958	ERJ3GEYG332	M.RESISTOR CH 1/16W 3.3K	1	
R3959	ERJ3GEYG102	M.RESISTOR CH 1/16W 1K	1	
R3960,61	ERJ3GEYJ221	M.RESISTOR CH 1/16W 220	2	
R3962	ERJ6RBD221	M.RESISTOR CH 1/10W 220	1	
R3963	ERJ6RBD181	M.RESISTOR CH 1/10W 180	1	
R3964	ERJ6RBD102	M.RESISTOR CH 1/10W 1K	1	
R3965	ERJ6RBD201	M.RESISTOR CH 1/10W 200	1	
R3966	ERJ3GEYJ222	M.RESISTOR CH 1/16W 2.2K	1	
R3967	ERJ6RBD151	M.RESISTOR CH 1/10W 150	1	
R3968	ERJ6RBD752	M.RESISTOR CH 1/10W 7.5K	1	
R3969	ERJ3GEYJ222	M.RESISTOR CH 1/16W 2.2K	1	
R3970	ERJ6RBD121	M.RESISTOR CH 1/10W 120	1	
R3971	ERJ6RBD271	M.RESISTOR CH 1/10W 270	1	
R3972	ERJ3GEYJ222	M.RESISTOR CH 1/16W 2.2K	1	
R3973	ERJ6RBD121	M.RESISTOR CH 1/10W 120	1	
R3974	ERJ6RBD271	M.RESISTOR CH 1/10W 270	1	
R3975	ERJ6RBD391	M.RESISTOR CH 1/10W 390	1	
R3976	ERJ6RED270	M.RESISTOR CH 1/10W 27	1	
R3977	ERJ3GEYJ151	M.RESISTOR CH 1/16W 150	1	
R3978	ERJ3GEYJ222	M.RESISTOR CH 1/16W 2.2K	1	
R3979	ERJ3GEYG471	M.RESISTOR CH 1/16W 470	1	
R3980	ERJ3GEYJ222	M.RESISTOR CH 1/16W 2.2K	1	
R3981	ERJ3GEYG471	M.RESISTOR CH 1/16W 470	1	
R3982	ERJ3GEYJ222	M.RESISTOR CH 1/16W 2.2K	1	
R3983-85	ERJ3GEYJ470	M.RESISTOR CH 1/16W 47	3	
R3986	ERJ3GEYJ223	M.RESISTOR CH 1/16W 22K	1	
R3987	ERJ3GEYJ473	M.RESISTOR CH 1/16W 47K	1	
R3988	ERJ3GEYJ272	M.RESISTOR CH 1/16W 2.7K	1	
R3989	ERJ3GEYJ470	M.RESISTOR CH 1/16W 47	1	
R3990	ERJ3GEYJ821	M.RESISTOR CH 1/16W 820	1	
R3991	ERJ3GEYJ470	M.RESISTOR CH 1/16W 47	1	
R3992,93	ERJ3GEYJ681	M.RESISTOR CH 1/16W 680	2	
R3994	ERJ3GEYJ331	M.RESISTOR CH 1/16W 330	1	
R3995	ERJ3GEYG102	M.RESISTOR CH 1/16W 1K	1	
R3996	ERJ3GEY0R00	M.RESISTOR CH 1/16W 0	1	
R3997,98	ERJ3GEYJ470	M.RESISTOR CH 1/16W 47	2	
R3999	ERJ3GEYJ100	M.RESISTOR CH 1/16W 10	1	
SW3950	VSS0372	SWITCH	1	
TG3001-04	VJR0646	TEST POINT	4	
TH3800	ERTD2FHL102S	THERMISTOR 1K	1	
TP3070	VJR0646	TEST POINT	1	
TP3100-06	VJR0646	TEST POINT	7	
TP3200	VJR0646	TEST POINT	1	
TP3650,51	VJR0646	TEST POINT	2	
TP3950	VJR0646	TEST POINT	1	
VC3070	ECV1ZW20X53T	TRIMMER	1	
VR3100	VRV0113B202	V.RESISTOR 2K	1	
VR3101	VRV0113B502	V.RESISTOR 5K	1	
VR3102	VRV0113B202	V.RESISTOR 2K	1	
VR3160	VRV0161B203	V.RESISTOR 20K	1	
VR3201	VRV0161B502	V.RESISTOR 5K	1	
VR3260	VRV0161B502	V.RESISTOR 5K	1	
VR3280	VRV0161B203	V.RESISTOR 20K	1	
VR3700	VRV0161B101	V.RESISTOR 100	1	
VR3701	VRV0113B501	V.RESISTOR 500	1	
VR3702	VRV0161B102	V.RESISTOR 1K	1	
VR3703	VRV0113B102	V.RESISTOR 1K	1	

Ref.No.	Part No.	Part Name & Description	Pcs	Remarks
VR3704	VRV0161B101	V.RESISTOR 100	1	
VR3705	VRV0161B102	V.RESISTOR 1K	1	
VR3706	VRV0161B101	V.RESISTOR 100	1	
VR3801	VRV0161B203	V.RESISTOR 20K	1	
VR3802,03	VRV0161B502	V.RESISTOR 5K	2	
VR3804,05	VRV0161B102	V.RESISTOR 1K	2	
VR3806,07	VRV0161B202	V.RESISTOR 2K	2	
VR3809,10	VRV0113B203	V.RESISTOR 20K	2	
VR3900	VRV0161B502	V.RESISTOR 5K	1	
VR3901	VRV0113B102	V.RESISTOR 1K	1	
VR3902	VRV0113B502	V.RESISTOR 5K	1	
VR3903	VRV0161B102	V.RESISTOR 1K	1	
VR3904	VRV0113B203	V.RESISTOR 20K	1	
VR3905	VRV0113B503	V.RESISTOR 50K	1	
VR3950	VRV0113B102	V.RESISTOR 1K	1	
VR3995	VRV0113B501	V.RESISTOR 500	1	
VR3996	VRV0113B102	V.RESISTOR 1K	1	
X3070	VSX0081	CRYSTAL OSCILLATOR	1	
X3160	VSX0338	CRYSTAL OSCILLATOR	1	
X3260	VSX0788	CRYSTAL OSCILLATOR	1	
X3280	VSX0338	CRYSTAL OSCILLATOR	1	
		MISCELLANEOUS		
	VML2143	CARD PULLER	1	
	VML2144	CARD PULLER	1	

Ref.No.	Part No.	Part Name & Description	Pcs	Remarks

Ref.No.	Part No.	Part Name & Description	Pcs	Remarks
■ E4	VEP83410B	F4 VIDEO OUT P.C.BOARD	1	(RTL)FOR AJ-D850E
C3001	ECEV1CV470Q	E.CAPACITOR CH 16V 47U	1	
C3002	ECUX1E104ZFV	C.CAPACITOR CH 25V 0.1U	1	
C3003	ECEV1CV470Q	E.CAPACITOR CH 16V 47U	1	
C3004	ECUX1E104ZFV	C.CAPACITOR CH 25V 0.1U	1	
C3010	ECUX1E104ZFV	C.CAPACITOR CH 25V 0.1U	1	
C3011,12	ECEV1EV100Q	E.CAPACITOR CH 25V 10U	2	
C3013	ECUX1E104ZFV	C.CAPACITOR CH 25V 0.1U	1	
C3014,15	ECEV1CV100Q	E.CAPACITOR CH 16V 10U	2	
C3016	ECUX1E104ZFV	C.CAPACITOR CH 25V 0.1U	1	
C3017,18	ECEV1CV100Q	E.CAPACITOR CH 16V 10U	2	
C3019	ECUX1E104ZFV	C.CAPACITOR CH 25V 0.1U	1	
C3020,21	ECEV1EV100Q	E.CAPACITOR CH 25V 10U	2	
C3022	ECUX1E104ZFV	C.CAPACITOR CH 25V 0.1U	1	
C3023	ECEV1CV100Q	E.CAPACITOR CH 16V 10U	1	
C3024,25	ECUX1E104ZFV	C.CAPACITOR CH 25V 0.1U	2	
C3026	ECEV1CV100Q	E.CAPACITOR CH 16V 10U	1	
C3027,28	ECUX1E104ZFV	C.CAPACITOR CH 25V 0.1U	2	
C3029	ECEV1CV470Q	E.CAPACITOR CH 16V 47U	1	
C3030,31	ECUX1E104ZFV	C.CAPACITOR CH 25V 0.1U	2	
C3032	ECEV1CV100Q	E.CAPACITOR CH 16V 10U	1	
C3033,34	ECUX1E104ZFV	C.CAPACITOR CH 25V 0.1U	2	
C3035	ECEV1CV100Q	E.CAPACITOR CH 16V 10U	1	
C3036,37	ECUX1E104ZFV	C.CAPACITOR CH 25V 0.1U	2	
C3038	ECEV1CV100Q	E.CAPACITOR CH 16V 10U	1	
C3039,40	ECUX1E104ZFV	C.CAPACITOR CH 25V 0.1U	2	
C3041	ECEV1CV100Q	E.CAPACITOR CH 16V 10U	1	
C3042	ECUX1E104ZFV	C.CAPACITOR CH 25V 0.1U	1	
C3050-57	ECUX1E104ZFV	C.CAPACITOR CH 25V 0.1U	8	
C3058	ECUX1H271JCV	C.CAPACITOR CH 50V 270P	1	
C3070-74	ECUX1E104ZFV	C.CAPACITOR CH 25V 0.1U	5	
C3075	ECUX1H820JCV	C.CAPACITOR CH 50V 82P	1	
C3076	ECEV1EV100Q	E.CAPACITOR CH 25V 10U	1	
C3077	ECUX1E104ZFV	C.CAPACITOR CH 25V 0.1U	1	
C3078	ECUX1H103KBV	C.CAPACITOR CH 50V 0.01U	1	
C3079,80	ECUX1E104ZFV	C.CAPACITOR CH 25V 0.1U	2	
C3081	ECUX1H103KBV	C.CAPACITOR CH 50V 0.01U	1	
C3082	ECEV1EN3R3Q	E.CAPACITOR CH 25V 3.3U	1	
C3083	ECUX1H102JCV	C.CAPACITOR CH 50V 1000P	1	
C3084	ECUX1H103KBV	C.CAPACITOR CH 50V 0.01U	1	
C3085,86	ECUX1H470JCV	C.CAPACITOR CH 50V 47P	2	
C3087	ECUX1H103KBV	C.CAPACITOR CH 50V 0.01U	1	
C3088,89	ECUX1E104ZFV	C.CAPACITOR CH 25V 0.1U	2	
C3090	ECUX1H151JCV	C.CAPACITOR CH 50V 150P	1	
C3091,92	ECUX1E104ZFV	C.CAPACITOR CH 25V 0.1U	2	
C3100-04	ECUX1E104ZFV	C.CAPACITOR CH 25V 0.1U	5	
C3105,06	ECUX1H102JCV	C.CAPACITOR CH 50V 1000P	2	
C3107	ECUX1H181JCV	C.CAPACITOR CH 50V 180P	1	
C3108	ECUX1H101JCV	C.CAPACITOR CH 50V 100P	1	
C3109	ECUX1H102JCV	C.CAPACITOR CH 50V 1000P	1	
C3110	ECUX1H101JCV	C.CAPACITOR CH 50V 100P	1	
C3111	ECUX1E104ZFV	C.CAPACITOR CH 25V 0.1U	1	
C3112,13	ECUX1H150JCV	C.CAPACITOR CH 50V 15P	2	
C3114	ECUX1E104ZFV	C.CAPACITOR CH 25V 0.1U	1	
C3117-19	ECUX1E104ZFV	C.CAPACITOR CH 25V 0.1U	3	
C3150,51	ECUX1E104ZFV	C.CAPACITOR CH 25V 0.1U	2	
C3152,53	ECUX1H103KBV	C.CAPACITOR CH 50V 0.01U	2	
C3154	ECEV1HN010Q	E.CAPACITOR CH 50V 1U	1	
C3155	ECUX1H102JCV	C.CAPACITOR CH 50V 1000P	1	
C3156,57	ECUX1E104ZFV	C.CAPACITOR CH 25V 0.1U	2	
C3160-65	ECUX1E104ZFV	C.CAPACITOR CH 25V 0.1U	6	
C3166,67	ECUX1H270JCV	C.CAPACITOR CH 50V 27P	2	
C3168,69	ECUX1H820JCV	C.CAPACITOR CH 50V 82P	2	
C3170,71	ECUX1E104ZFV	C.CAPACITOR CH 25V 0.1U	2	
C3172,73	ECUX1H103KBV	C.CAPACITOR CH 50V 0.01U	2	
C3174	ECEV1HN010Q	E.CAPACITOR CH 50V 1U	1	
C3175,76	ECUX1E104ZFV	C.CAPACITOR CH 25V 0.1U	2	
C3177	ECUX1E104KBN	C.CAPACITOR CH 25V 0.1U	1	
C3178	ECUX1H103KBV	C.CAPACITOR CH 50V 0.01U	1	
C3179-82	ECUX1E104KBN	C.CAPACITOR CH 25V 0.1U	4	
C3183,84	ECUX1E104ZFV	C.CAPACITOR CH 25V 0.1U	2	
C3200-03	ECUX1E104ZFV	C.CAPACITOR CH 25V 0.1U	4	

Ref.No.	Part No.	Part Name & Description	Pcs	Remarks
C3207	ECUX1H471JCV	C.CAPACITOR CH 50V 470P	1	
C3208	ECUX1H101JCV	C.CAPACITOR CH 50V 100P	1	
C3250,51	ECUX1E104ZFV	C.CAPACITOR CH 25V 0.1U	2	
C3252,53	ECUX1H103KBV	C.CAPACITOR CH 50V 0.01U	2	
C3254	ECEV1HN010Q	E.CAPACITOR CH 50V 1U	1	
C3255	ECUX1H102JCV	C.CAPACITOR CH 50V 1000P	1	
C3256,57	ECUX1E104ZFV	C.CAPACITOR CH 25V 0.1U	2	
C3260-65	ECUX1E104ZFV	C.CAPACITOR CH 25V 0.1U	6	
C3266,67	ECUX1H103KBV	C.CAPACITOR CH 50V 0.01U	2	
C3268	ECEV1HN010Q	E.CAPACITOR CH 50V 1U	1	
C3269	ECUX1H102JCV	C.CAPACITOR CH 50V 1000P	1	
C3270	ECUX1E104ZFV	C.CAPACITOR CH 25V 0.1U	1	
C3280-83	ECUX1E104ZFV	C.CAPACITOR CH 25V 0.1U	4	
C3284,85	ECUX1E104KBN	C.CAPACITOR CH 25V 0.1U	2	
C3286	ECUX1H103KBV	C.CAPACITOR CH 50V 0.01U	1	
C3287,88	ECUX1E104ZFV	C.CAPACITOR CH 25V 0.1U	2	
C3289	ECUX1E104KBN	C.CAPACITOR CH 25V 0.1U	1	
C3290	ECUX1H103KBV	C.CAPACITOR CH 50V 0.01U	1	
C3291	ECEV1HN010Q	E.CAPACITOR CH 50V 1U	1	
C3292	ECUX1E104ZFV	C.CAPACITOR CH 25V 0.1U	1	
C3300-04	ECUX1E104ZFV	C.CAPACITOR CH 25V 0.1U	5	
C3330,31	ECUX1E104ZFV	C.CAPACITOR CH 25V 0.1U	2	
C3340-43	ECUX1E104ZFV	C.CAPACITOR CH 25V 0.1U	4	
C3350-53	ECUX1E104ZFV	C.CAPACITOR CH 25V 0.1U	4	
C3370-83	ECUX1E104ZFV	C.CAPACITOR CH 25V 0.1U	14	
C3430	ECUX1E104ZFV	C.CAPACITOR CH 25V 0.1U	1	
C3432-40	ECUX1E104ZFV	C.CAPACITOR CH 25V 0.1U	9	
C3442,43	ECUX1E104ZFV	C.CAPACITOR CH 25V 0.1U	2	
C3445,46	ECUX1E104ZFV	C.CAPACITOR CH 25V 0.1U	2	
C3452	ECUX1H050CCV	C.CAPACITOR CH 50V 5P	1	
C3455	ECUX1H101JCV	C.CAPACITOR CH 50V 100P	1	
C3457	ECUX1H020CCV	C.CAPACITOR CH 50V 2P	1	
C3460	ECUX1E104ZFV	C.CAPACITOR CH 25V 0.1U	1	
C3464	ECEV1CV100Q	E.CAPACITOR CH 16V 10U	1	
C3465	ECUX1E104ZFV	C.CAPACITOR CH 25V 0.1U	1	
C3466	ECEV1CV100Q	E.CAPACITOR CH 16V 10U	1	
C3467,68	ECUX1E104ZFV	C.CAPACITOR CH 25V 0.1U	2	
C3469	ECEV1CV100Q	E.CAPACITOR CH 16V 10U	1	
C3470	ECUX1H470JCV	C.CAPACITOR CH 50V 47P	1	
C3471	ECUX1H020CCV	C.CAPACITOR CH 50V 2P	1	
C3472-74	ECUX1E104ZFV	C.CAPACITOR CH 25V 0.1U	3	
C3475	ECEV1CV100Q	E.CAPACITOR CH 16V 10U	1	
C3476-83	ECUX1E104ZFV	C.CAPACITOR CH 25V 0.1U	8	
C3484	ECEV1CV100Q	E.CAPACITOR CH 16V 10U	1	
C3485	ECUX1H102JCV	C.CAPACITOR CH 50V 1000P	1	
C3486	ECUX1H101JCV	C.CAPACITOR CH 50V 100P	1	
C3487	ECUX1E104ZFV	C.CAPACITOR CH 25V 0.1U	1	
C3500-11	ECUX1E104ZFV	C.CAPACITOR CH 25V 0.1U	12	
C3551-57	ECUX1E104ZFV	C.CAPACITOR CH 25V 0.1U	7	
C3576-79	ECUX1E104ZFV	C.CAPACITOR CH 25V 0.1U	4	
C3580,81	ECUM1E104ZFN	C.CAPACITOR CH 25V 0.1U	2	
C3582	ECEV0JV330Q	E.CAPACITOR CH6.3V 33U	1	
C3583-86	ECUX1E104ZFV	C.CAPACITOR CH 25V 0.1U	4	
C3588-92	ECUX1E104ZFV	C.CAPACITOR CH 25V 0.1U	5	
C3600	ECEV1EV330Q	E.CAPACITOR CH 25V 33U	1	
C3601	ECUX1E104ZFV	C.CAPACITOR CH 25V 0.1U	1	
C3602	ECEV1CV470Q	E.CAPACITOR CH 16V 47U	1	
C3603	ECUX1E104ZFV	C.CAPACITOR CH 25V 0.1U	1	
C3604	ECEV1CV470Q	E.CAPACITOR CH 16V 47U	1	
C3605	ECUX1E104ZFV	C.CAPACITOR CH 25V 0.1U	1	
C3606	ECEV1EV330Q	E.CAPACITOR CH 25V 33U	1	
C3607,08	ECUX1E104ZFV	C.CAPACITOR CH 25V 0.1U	2	
C3609	ECEV1CV100Q	E.CAPACITOR CH 16V 10U	1	
C3610,11	ECUX1E104ZFV	C.CAPACITOR CH 25V 0.1U	2	
C3612	ECEV1CV100Q	E.CAPACITOR CH 16V 10U	1	
C3613,14	ECUX1E104ZFV	C.CAPACITOR CH 25V 0.1U	2	
C3615	ECEV1CV100Q	E.CAPACITOR CH 16V 10U	1	
C3616,17	ECUX1E104ZFV	C.CAPACITOR CH 25V 0.1U	2	
C3618	ECEV1CV100Q	E.CAPACITOR CH 16V 10U	1	
C3619,20	ECUX1E104ZFV	C.CAPACITOR CH 25V 0.1U	2	
C3621	ECEV1CV100Q	E.CAPACITOR CH 16V 10U	1	
C3622,23	ECUX1E104ZFV	C.CAPACITOR CH 25V 0.1U	2	
C3624	ECEV1CV100Q	E.CAPACITOR CH 16V 10U	1	
C3625,26	ECUX1E104ZFV	C.CAPACITOR CH 25V 0.1U	2	
C3627	ECEV1CV100Q	E.CAPACITOR CH 16V 10U	1	

Ref.No.	Part No.	Part Name & Description	Pcs	Remarks
C3628	ECUX1E104ZFV	C.CAPACITOR CH 25V 0.1U	1	
C3650	ECEV1CV470Q	E.CAPACITOR CH 16V 47U	1	
C3651	ECUX1H330JCV	C.CAPACITOR CH 50V 33P	1	
C3652	ECUX1H220JCV	C.CAPACITOR CH 50V 22P	1	
C3653	ECUX1H680JCV	C.CAPACITOR CH 50V 68P	1	
C3654,55	ECUX1E104KBN	C.CAPACITOR CH 25V 0.1U	2	
C3656	ECEV1HN010Q	E.CAPACITOR CH 50V 1U	1	
C3657	ECUX1E104KBN	C.CAPACITOR CH 25V 0.1U	1	
C3658	ECUX1E104ZFV	C.CAPACITOR CH 25V 0.1U	1	
C3659	ECUX1H103KBV	C.CAPACITOR CH 50V 0.01U	1	
C3660	ECUX1H820JCV	C.CAPACITOR CH 50V 82P	1	
C3661,62	ECUX1H103KBV	C.CAPACITOR CH 50V 0.01U	2	
C3663	ECUX1H472KBV	C.CAPACITOR CH 50V 4700P	1	
C3664	ECUX1E104ZFV	C.CAPACITOR CH 25V 0.1U	1	
C3665	ECUX1H103KBV	C.CAPACITOR CH 50V 0.01U	1	
C3666	ECUX1E104ZFV	C.CAPACITOR CH 25V 0.1U	1	
C3700	ECUX1E104ZFV	C.CAPACITOR CH 25V 0.1U	1	
C3701	ECEV1CV100Q	E.CAPACITOR CH 16V 10U	1	
C3702	ECUX1E104ZFV	C.CAPACITOR CH 25V 0.1U	1	
C3703	ECEV1CV100Q	E.CAPACITOR CH 16V 10U	1	
C3704	ECUX1E104ZFV	C.CAPACITOR CH 25V 0.1U	1	
C3705	ECEV1CV100Q	E.CAPACITOR CH 16V 10U	1	
C3706,07	ECUX1E104KBN	C.CAPACITOR CH 25V 0.1U	2	
C3708-10	ECUX1E104ZFV	C.CAPACITOR CH 25V 0.1U	3	
C3711	ECEV1CV100Q	E.CAPACITOR CH 16V 10U	1	
C3712	ECUX1H560JCV	C.CAPACITOR CH 50V 56P	1	
C3713	ECUX1H020CCV	C.CAPACITOR CH 50V 2P	1	
C3714	ECUX1H121JCV	C.CAPACITOR CH 50V 120P	1	
C3717-20	ECUX1E104ZFV	C.CAPACITOR CH 25V 0.1U	4	
C3721	ECUX1H560JCV	C.CAPACITOR CH 50V 56P	1	
C3725	ECUX1H180JCV	C.CAPACITOR CH 50V 18P	1	
C3726	ECUX1H560JCV	C.CAPACITOR CH 50V 56P	1	
C3727,28	ECUX1E104ZFV	C.CAPACITOR CH 25V 0.1U	2	
C3729	ECUX1H100DCV	C.CAPACITOR CH 50V 10P	1	
C3730	ECUX1H680JCV	C.CAPACITOR CH 50V 68P	1	
C3731	ECEV1CV100Q	E.CAPACITOR CH 16V 10U	1	
C3732	ECUX1H151JCV	C.CAPACITOR CH 50V 150P	1	
C3733,34	ECUX1E104ZFV	C.CAPACITOR CH 25V 0.1U	2	
C3735	ECUX1H221JCV	C.CAPACITOR CH 50V 220P	1	
C3739,40	ECUX1E104ZFV	C.CAPACITOR CH 25V 0.1U	2	
C3745	ECUX1H180JCV	C.CAPACITOR CH 50V 18P	1	
C3746	ECUX1H560JCV	C.CAPACITOR CH 50V 56P	1	
C3747,48	ECUX1E104ZFV	C.CAPACITOR CH 25V 0.1U	2	
C3749	ECUX1H100DCV	C.CAPACITOR CH 50V 10P	1	
C3750	ECUX1H680JCV	C.CAPACITOR CH 50V 68P	1	
C3751	ECEV1CV100Q	E.CAPACITOR CH 16V 10U	1	
C3752,53	ECUX1E104ZFV	C.CAPACITOR CH 25V 0.1U	2	
C3754	ECUX1H331JCV	C.CAPACITOR CH 50V 330P	1	
C3756-58	ECUX1H102JCV	C.CAPACITOR CH 50V 1000P	3	
C3759	ECUX1H821JCV	C.CAPACITOR CH 50V 820P	1	
C3760	ECUX1E104ZFV	C.CAPACITOR CH 25V 0.1U	1	
C3761-64	ECEA1CGE221	E.CAPACITOR 16V 220U	4	
C3800	ECUX1E104ZFV	C.CAPACITOR CH 25V 0.1U	1	
C3801,02	ECEV1CV100Q	E.CAPACITOR CH 16V 10U	2	
C3803	ECUX1E104ZFV	C.CAPACITOR CH 25V 0.1U	1	
C3804	ECEV1CV100Q	E.CAPACITOR CH 16V 10U	1	
C3805	ECUX1E104ZFV	C.CAPACITOR CH 25V 0.1U	1	
C3810	ECUX1H560JCV	C.CAPACITOR CH 50V 56P	1	
C3811	ECUX1H181JCV	C.CAPACITOR CH 50V 180P	1	
C3812,13	ECUX1E104ZFV	C.CAPACITOR CH 25V 0.1U	2	
C3814,15	ECUX1E104KBN	C.CAPACITOR CH 25V 0.1U	2	
C3817	ECUX1H103KBV	C.CAPACITOR CH 50V 0.01U	1	
C3818,19	ECUX1E104ZFV	C.CAPACITOR CH 25V 0.1U	2	
C3820,21	ECEV1CV100Q	E.CAPACITOR CH 16V 10U	2	
C3824	ECUX1E104KBN	C.CAPACITOR CH 25V 0.1U	1	
C3825,26	ECUX1E104ZFV	C.CAPACITOR CH 25V 0.1U	2	
C3827,28	ECUX1H220JCV	C.CAPACITOR CH 50V 22P	2	
C3829	ECUX1E104ZFV	C.CAPACITOR CH 25V 0.1U	1	
C3830	ECUX1H820JCV	C.CAPACITOR CH 50V 82P	1	
C3831	ECUX1E104KBN	C.CAPACITOR CH 25V 0.1U	1	
C3832,33	ECUX1E104ZFV	C.CAPACITOR CH 25V 0.1U	2	
C3834	ECUX1H100DCV	C.CAPACITOR CH 50V 10P	1	
C3835,36	ECUX1E104KBN	C.CAPACITOR CH 25V 0.1U	2	
C3837	ECUX1H271JCV	C.CAPACITOR CH 50V 270P	1	
C3838	ECUX1H151JCV	C.CAPACITOR CH 50V 150P	1	

Ref.No.	Part No.	Part Name & Description	Pcs	Remarks
C3839	ECUX1E104KBN	C.CAPACITOR CH 25V 0.1U	1	
C3840	ECUX1H820JCV	C.CAPACITOR CH 50V 82P	1	
C3841-43	ECUX1E104ZFV	C.CAPACITOR CH 25V 0.1U	3	
C3844	ECUX1E104KBN	C.CAPACITOR CH 25V 0.1U	1	
C3845,46	ECUX1H220JCV	C.CAPACITOR CH 50V 22P	2	
C3847	ECUX1E104KBN	C.CAPACITOR CH 25V 0.1U	1	
C3848,49	ECUX1H220JCV	C.CAPACITOR CH 50V 22P	2	
C3850-52	ECUX1E104ZFV	C.CAPACITOR CH 25V 0.1U	3	
C3853	ECUX1H120JCV	C.CAPACITOR CH 50V 12P	1	
C3854,55	ECUX1E104ZFV	C.CAPACITOR CH 25V 0.1U	2	
C3856	ECUX1C104KBV	C.CAPACITOR CH 16V 0.1U	1	
C3857-60	ECUX1E104ZFV	C.CAPACITOR CH 25V 0.1U	4	
C3861	ECUM1E473KBN	C.CAPACITOR CH 25V 0.047U	1	
C3862	ECEV1CV100Q	E.CAPACITOR CH 16V 10U	1	
C3864,65	ECUX1E104ZFV	C.CAPACITOR CH 25V 0.1U	2	
C3866	ECEV0JV470Q	E.CAPACITOR CH6.3V 47U	1	
C3867	ECUX1E104ZFV	C.CAPACITOR CH 25V 0.1U	1	
C3868	ECEV1CV100Q	E.CAPACITOR CH 16V 10U	1	
C3869	ECEV0JV470Q	E.CAPACITOR CH6.3V 47U	1	
C3870	ECUM1E473KBN	C.CAPACITOR CH 25V 0.047U	1	
C3871	ECUX1E104ZFV	C.CAPACITOR CH 25V 0.1U	1	
C3873	ECUX1E104ZFV	C.CAPACITOR CH 25V 0.1U	1	
C3875	ECEV1CV100Q	E.CAPACITOR CH 16V 10U	1	
C3876	ECUM1E473KBN	C.CAPACITOR CH 25V 0.047U	1	
C3877	ECUX1E104KBN	C.CAPACITOR CH 25V 0.1U	1	
C3878	ECUX1H270JCV	C.CAPACITOR CH 50V 27P	1	
C3879	ECUX1H221JCV	C.CAPACITOR CH 50V 220P	1	
C3881	ECUX1H270JCV	C.CAPACITOR CH 50V 27P	1	
C3883	ECUX1H101JCV	C.CAPACITOR CH 50V 100P	1	
C3884	ECUX1H100DCV	C.CAPACITOR CH 50V 10P	1	
C3885	ECUX1H470JCV	C.CAPACITOR CH 50V 47P	1	
C3886	ECUX1H330JCV	C.CAPACITOR CH 50V 33P	1	
C3890	ECUX1E104ZFV	C.CAPACITOR CH 25V 0.1U	1	
C3893,94	ECUX1E104ZFV	C.CAPACITOR CH 25V 0.1U	2	
C3900	ECEV1CV100Q	E.CAPACITOR CH 16V 10U	1	
C3901	ECUX1E104ZFV	C.CAPACITOR CH 25V 0.1U	1	
C3902	ECEV1CV100Q	E.CAPACITOR CH 16V 10U	1	
C3903	ECUX1E104ZFV	C.CAPACITOR CH 25V 0.1U	1	
C3904	ECUX1H020CCV	C.CAPACITOR CH 50V 2P	1	
C3905	ECUX1H151JCV	C.CAPACITOR CH 50V 150P	1	
C3906	ECUX1H470JCV	C.CAPACITOR CH 50V 47P	1	
C3907	ECUX1H560JCV	C.CAPACITOR CH 50V 56P	1	
C3910,11	ECUX1E104ZFV	C.CAPACITOR CH 25V 0.1U	2	
C3914	ECUX1E104ZFV	C.CAPACITOR CH 25V 0.1U	1	
C3915	ECUX1H390JCV	C.CAPACITOR CH 50V 39P	1	
C3918-20	ECUX1E104ZFV	C.CAPACITOR CH 25V 0.1U	3	
C3921,22	ECUX1E104KBN	C.CAPACITOR CH 25V 0.1U	2	
C3924	ECUX1H103KBV	C.CAPACITOR CH 50V 0.01U	1	
C3925,26	ECUX1E104ZFV	C.CAPACITOR CH 25V 0.1U	2	
C3927	ECUX1H470JCV	C.CAPACITOR CH 50V 47P	1	
C3928	ECUX1E104KBN	C.CAPACITOR CH 25V 0.1U	1	
C3929,30	ECUX1E104ZFV	C.CAPACITOR CH 25V 0.1U	2	
C3931	ECUX1H220JCV	C.CAPACITOR CH 50V 22P	1	
C3932	ECUX1H020CCV	C.CAPACITOR CH 50V 2P	1	
C3933,34	ECUX1E104ZFV	C.CAPACITOR CH 25V 0.1U	2	
C3935	ECUX1H150JCV	C.CAPACITOR CH 50V 15P	1	
C3936	ECUX1H220JCV	C.CAPACITOR CH 50V 22P	1	
C3937,38	ECUX1H470JCV	C.CAPACITOR CH 50V 47P	2	
C3939	ECUX1H220JCV	C.CAPACITOR CH 50V 22P	1	
C3940	ECEV1CV100Q	E.CAPACITOR CH 16V 10U	1	
C3942	ECUX1H102JCV	C.CAPACITOR CH 50V 1000P	1	
C3943	ECUX1H821JCV	C.CAPACITOR CH 50V 820P	1	
C3944	ECUX1E104ZFV	C.CAPACITOR CH 25V 0.1U	1	
C3945	ECUX1H560JCV	C.CAPACITOR CH 50V 56P	1	
C3946	ECUX1H101JCV	C.CAPACITOR CH 50V 100P	1	
C3950	ECUX1E104ZFV	C.CAPACITOR CH 25V 0.1U	1	
C3951	ECUX1H470JCV	C.CAPACITOR CH 50V 47P	1	
C3952,53	ECUX1E104ZFV	C.CAPACITOR CH 25V 0.1U	2	
C3954	ECUX1H330JCV	C.CAPACITOR CH 50V 33P	1	
C3955	ECUX1H271JCV	C.CAPACITOR CH 50V 270P	1	
C3957,58	ECUX1E104ZFV	C.CAPACITOR CH 25V 0.1U	2	
C3959	ECUX1H270JCV	C.CAPACITOR CH 50V 27P	1	
C3960,61	ECUX1E104ZFV	C.CAPACITOR CH 25V 0.1U	2	
C3962	ECUX1H270JCV	C.CAPACITOR CH 50V 27P	1	
C3963-65	ECUX1E104ZFV	C.CAPACITOR CH 25V 0.1U	3	

Ref.No.	Part No.	Part Name & Description	Pcs	Remarks
C3966	ECUX1H820JCV	C.CAPACITOR CH 50V 82P	1	
C3990	ECUX1H470JCV	C.CAPACITOR CH 50V 47P	1	
C3991	ECUX1H220JCV	C.CAPACITOR CH 50V 22P	1	
C3992	ECUX1E104ZFV	C.CAPACITOR CH 25V 0.1U	1	
C3993	ECUX1H390JCV	C.CAPACITOR CH 50V 39P	1	
C3994,95	ECUX1E104ZFV	C.CAPACITOR CH 25V 0.1U	2	
C3996	ECUX1H070DCV	C.CAPACITOR CH 50V 7P	1	
C3997	ECUX1E104ZFV	C.CAPACITOR CH 25V 0.1U	1	
D3070	MA335	DIODE	1	
D3150	M1MA152K	DIODE	1	
D3160	M1MA152K	DIODE	1	
D3250	M1MA152K	DIODE	1	
D3260	M1MA152K	DIODE	1	
D3550-52	MA701A	DIODE	3	
D3650	MA152WK	DIODE	1	
D3651	MA717	DIODE	1	
D3800,01	MA335	DIODE	2	
D3810,11	M1MA152K	DIODE	2	
D3950	M1MA152K	DIODE	1	
D3960,61	M1MA152K	DIODE	2	
FL3010-13	VLF1016A223	FILTER	4	
FL3700	VLF1294	FILTER	1	
FL3701,02	VLF1295	FILTER	2	
FL3900	VLF1016A223	FILTER	1	
FL3901	VLF1462	FILTER	1	
IC3010	NJM78L09UA	IC	1	
IC3011	NJM78L05UA	IC	1	
IC3012	NJM79L05UA	IC	1	
IC3013	NJM78L09UA	IC	1	
IC3014	NJM78L05UA	IC	1	
IC3015	NJM79L05UA	IC	1	
IC3016	NJM79L09UA	IC	1	
IC3050	SLA7220F5A	IC	1	
IC3051	EPM7128STC15	IC	1	
IC3070	MC74HC125AF	IC	1	
IC3071	NE521D	IC	1	
IC3072	MC74HC4053F	IC	1	
IC3073	NJM084M	IC	1	
IC3074	MC74HC4053F	IC	1	
IC3100	UPD65650J203	IC	1	
IC3101-03	SN74LS221NS	IC	3	
IC3104,05	SN74LS04NS	IC	2	
IC3106	MC74HC00AF	IC	1	
IC3109	D485505G25	IC	1	
IC3111	MC74HC574AF	IC	1	
IC3112	UPD42280G3	IC	1	
IC3150	MC74HC125AF	IC	1	
IC3151	NJM082BM	IC	1	
IC3160	MC74HC74AF	IC	1	
IC3161	74F112SJ	IC	1	
IC3162	MC74HC86AF	IC	1	
IC3163	MC74HC02AF	IC	1	
IC3164	SN74LS123NS	IC	1	
IC3165	SN74LS221NS	IC	1	
IC3166	SN74LS05NS	IC	1	
IC3167-69	MC74HC574AF	IC	3	
IC3170	SN74AS244AN	IC	1	
IC3171	NJM084M	IC	1	
IC3172	DAC10GS	IC	1	
IC3200	UPD65650J203	IC	1	
IC3202	SN74LS221NS	IC	1	
IC3250	MC74HC125AF	IC	1	
IC3251	NJM082BM	IC	1	
IC3260	NJM082BM	IC	1	
IC3261	74F08SJ	IC	1	
IC3262	SN74AS74ANS	IC	1	
IC3263	74F574SJ	IC	1	
IC3264,65	SN74AS244AN	IC	2	
IC3280-82	MC74HC574AF	IC	3	
IC3283	DAC10GS	IC	1	
IC3284	NJM082BM	IC	1	
IC3300,01	THCT574AF	IC	2	

Ref.No.	Part No.	Part Name & Description	Pcs	Remarks
IC3302	T74HCT541AF	IC	1	
IC3303,04	THCT574AF	IC	2	
IC3330,31	SN74AS244AN	IC	2	
IC3340	EPM7128STC15	IC	1	
IC3350	MB87D132	IC	1	
IC3370	L7A1519	IC	1	
IC3371	EPM7128STC15	IC	1	
IC3372-74	D485505G25	IC	3	
IC3430	74ALS541SJ	IC	1	
IC3432-34	MC10H124M	IC	3	
IC3435	74ALS541SJ	IC	1	
IC3436	MC10H124M	IC	1	
IC3437,38	74F244SJ	IC	2	
IC3439,40	D485505G25	IC	2	
IC3500,01	SN74S1051NS	IC	2	
IC3502	74F541SJ	IC	1	
IC3503	74F245SJ	IC	1	
IC3504,05	74F541SJ	IC	2	
IC3506,07	UPD71055GB	IC	2	
IC3508,09	THCT574AF	IC	2	
IC3510,11	SN74S1051NS	IC	2	
IC3550,51	D485505G25	IC	2	
IC3552	CG46183-134	IC	1	
IC3581-84	D485505G25	IC	4	
IC3585,86	THCT574AF	IC	2	
IC3587	EPM7128STC15	IC	1	
IC3588,89	TLCX244FT	IC	2	
IC3591-93	TVHT244FT	IC	3	
IC3595	TVHT244FT	IC	1	
IC3596	XC62AP3002P	IC	1	
IC3600	AN78N09	IC	1	
IC3601	AN78N05	IC	1	
IC3602	AN79N09	IC	1	
IC3603	AN78N09	IC	1	
IC3604	NJM78L05UA	IC	1	
IC3605	NJM79L05UA	IC	1	
IC3606	AN79N09	IC	1	
IC3650	AN91A12S	IC	1	
IC3651	NE521D	IC	1	
IC3700	ADV7123KST50	IC	1	
IC3702-04	LT1228CS8	IC	3	
IC3801	DAC10GS	IC	1	
IC3802	NJM082BM	IC	1	
IC3804	MC74HC4053F	IC	1	
IC3805	M51272FP	IC	1	
IC3900	LT1228CS8	IC	1	
IC3901	NJM2534V	IC	1	
IC3902	DAC10GS	IC	1	
IC3903	NJM082BM	IC	1	
IC3904	AD828AR	IC	1	
IC3990	NJM2534V	IC	1	
IC3996	LT1228CS8	IC	1	
IC3997	CXD1175AM	IC	1	
IC3998	NJM78L05UA	IC	1	
L3001-07	VLP0133	COIL	7	
L3071	VLQ0163J221	COIL 220UH	1	
L3550	VLP0133	COIL	1	
L3650	VLQ0163J390	COIL 39UH	1	
L3651	VLQ0163J221	COIL 220UH	1	
L3700	VLQ0163J220	COIL 22UH	1	
L3701	VLQ0576	COIL	1	
L3703	VLQ0163J220	COIL 22UH	1	
L3704	VLQ0163J100	COIL 10UH	1	
L3707	VLQ0163J6R8	COIL 6.8UH	1	
L3708	VLQ0163J2R2	COIL 2.2UH	1	
L3711	VLQ0163J6R8	COIL 6.8UH	1	
L3712	VLQ0163J2R2	COIL 2.2UH	1	
L3800-02	VLQ0163J220	COIL 22UH	3	
L3803	VLQ0163J390	COIL 39UH	1	
L3804	VLQ0163J121	COIL 120UH	1	
L3805-07	VLQ0163J470	COIL 47UH	3	
L3808	VLQ0163J150	COIL 15UH	1	
L3809	VLQ0163J5R6	COIL 5.6UH	1	
L3810	VLQ0163J6R8	COIL 6.8UH	1	

Ref.No.	Part No.	Part Name & Description	Pcs	Remarks
L3900	VLQ0163J100	COIL 10UH	1	
L3901,02	VLQ0163J220	COIL 22UH	2	
L3950	VLQ0163J101	COIL 100UH	1	
L3951,52	VLQ0163J470	COIL 47UH	2	
L3990	VLQ0163J180	COIL 18UH	1	
L3992	VLQ0163J390	COIL 39UH	1	
L3995	VLQ0163J150	COIL 15UH	1	
L3997	VLQ0319K101	COIL 100UH	1	
P3001,02	VJP3454B096	CONNECTOR (MALE)	2	
P3370	VJP1233T	CONNECTOR (MALE) 6P	1	
Q3070	MSB709-R	TRANSISTOR	1	
Q3071,72	2SK608-R	TRANSISTOR	2	
Q3700	MSD601-R	TRANSISTOR	1	
Q3701	MSB709-R	TRANSISTOR	1	
Q3702,03	MSD601-R	TRANSISTOR	2	
Q3704	MSB709-R	TRANSISTOR	1	
Q3707-09	MSB709-R	TRANSISTOR	3	
Q3710,11	MSD601-R	TRANSISTOR	2	
Q3712	MSB709-R	TRANSISTOR	1	
Q3715,16	MSB709-R	TRANSISTOR	2	
Q3717	MSD601-R	TRANSISTOR	1	
Q3718,19	2SB709A-R	TRANSISTOR	2	
Q3720	MSD602-R	TRANSISTOR	1	
Q3721	MSD601-R	TRANSISTOR	1	
Q3722	MSB709-R	TRANSISTOR	1	
Q3723	MSD601-R	TRANSISTOR	1	
Q3724	2SA1532-C	TRANSISTOR	1	
Q3800	MSB709-R	TRANSISTOR	1	
Q3801	MSC2295-B	TRANSISTOR	1	
Q3802	MSB709-R	TRANSISTOR	1	
Q3803	MSC2295-B	TRANSISTOR	1	
Q3804,05	MSB709-R	TRANSISTOR	2	
Q3806	MSC2295-B	TRANSISTOR	1	
Q3807	MSB709-R	TRANSISTOR	1	
Q3808,09	MSD601-R	TRANSISTOR	2	
Q3810	XN6501	TRANSISTOR-RESISTOR	1	
Q3811,12	MSC2295-B	TRANSISTOR	2	
Q3813	MSB709-R	TRANSISTOR	1	
Q3814	MSD601-R	TRANSISTOR	1	
Q3900,01	MSD601-R	TRANSISTOR	2	
Q3902	MSB709-R	TRANSISTOR	1	
Q3903	2SB709A-R	TRANSISTOR	1	
Q3904,05	2SA1532-C	TRANSISTOR	2	
Q3906,07	MSB709-R	TRANSISTOR	2	
Q3908	2SA1532-C	TRANSISTOR	1	
Q3950	2SC2404-D	TRANSISTOR	1	
Q3951,52	MSB709-R	TRANSISTOR	2	
Q3953	MSD601-R	TRANSISTOR	1	
Q3954-56	MSB709-R	TRANSISTOR	3	
Q3957-60	MSD601-R	TRANSISTOR	4	
Q3990	2SA1532-C	TRANSISTOR	1	
Q3991	2SB709A-R	TRANSISTOR	1	
Q3995	2SB709A-R	TRANSISTOR	1	
Q3996	2SA1532-C	TRANSISTOR	1	
Q3997	2SB709A-R	TRANSISTOR	1	
R3011	ERJ3GEYG102	M.RESISTOR CH 1/16W 1K	1	
R3017	ERJ3GEYJ681	M.RESISTOR CH 1/16W 680	1	
R3018	ERJ3GEYJ391	M.RESISTOR CH 1/16W 390	1	
R3019	ERJ3GEY0R00	M.RESISTOR CH 1/16W 0	1	
R3022	ERJ3GEYJ470	M.RESISTOR CH 1/16W 47	1	
R3023	ERJ3GEYG102	M.RESISTOR CH 1/16W 1K	1	
R3024	ERJ3GEY0R00	M.RESISTOR CH 1/16W 0	1	
R3025	ERJ3GEYJ271	M.RESISTOR CH 1/16W 270	1	
R3026	ERJ3GEYG102	M.RESISTOR CH 1/16W 1K	1	
R3027	ERJ3GEYJ124	M.RESISTOR CH 1/16W 120K	1	
R3029	ERJ3GEYJ392	M.RESISTOR CH 1/16W 3.9K	1	
R3032	ERJ3GEYG472	M.RESISTOR CH 1/16W 4.7K	1	
R3033	ERJ3GEYJ470	M.RESISTOR CH 1/16W 47	1	
R3034	ERJ3GEY0R00	M.RESISTOR CH 1/16W 0	1	
R3035	ERJ3GEYJ221	M.RESISTOR CH 1/16W 220	1	
R3036	ERJ3GEYJ222	M.RESISTOR CH 1/16W 2.2K	1	
R3037	ERJ3GEYJ103	M.RESISTOR CH 1/16W 10K	1	

Ref.No.	Part No.	Part Name & Description	Pcs	Remarks
R3038,39	ERJ3GEYG332	M.RESISTOR CH 1/16W 3.3K	2	
R3040	ERJ3GEY0R00	M.RESISTOR CH 1/16W 0	1	
R3043	ERJ3GEYJ222	M.RESISTOR CH 1/16W 2.2K	1	
R3044,45	ERJ3GEYG102	M.RESISTOR CH 1/16W 1K	2	
R3046	ERJ3GEY0R00	M.RESISTOR CH 1/16W 0	1	
R3050-53	ERJ3GEYG102	M.RESISTOR CH 1/16W 1K	4	
R3054-56	ERJ3GEYJ101	M.RESISTOR CH 1/16W 100	3	
R3061,62	ERJ3GEYJ101	M.RESISTOR CH 1/16W 100	2	
R3064	ERJ3GEYJ101	M.RESISTOR CH 1/16W 100	1	
R3065-67	ERJ3GEYG102	M.RESISTOR CH 1/16W 1K	3	
R3068	ERJ3GEYG471	M.RESISTOR CH 1/16W 470	1	
R3070	ERJ3GEYJ183	M.RESISTOR CH 1/16W 18K	1	
R3071	ERJ3GEYJ333	M.RESISTOR CH 1/16W 33K	1	
R3072	ERJ3GEYG102	M.RESISTOR CH 1/16W 1K	1	
R3073	ERJ3GEYJ103	M.RESISTOR CH 1/16W 10K	1	
R3074	ERJ3GEYJ222	M.RESISTOR CH 1/16W 2.2K	1	
R3075	ERJ3GEYG152	M.RESISTOR CH 1/16W 1.5K	1	
R3076	ERJ3GEYG471	M.RESISTOR CH 1/16W 470	1	
R3077	ERJ3GEYJ153	M.RESISTOR CH 1/16W 15K	1	
R3078	ERJ3GEYJ333	M.RESISTOR CH 1/16W 33K	1	
R3079	ERJ3GEYJ105	M.RESISTOR CH 1/16W 1M	1	
R3080	ERJ3GEYJ823	M.RESISTOR CH 1/16W 82K	1	
R3081,82	ERJ3GEYG102	M.RESISTOR CH 1/16W 1K	2	
R3083	ERJ3GEYJ563	M.RESISTOR CH 1/16W 56K	1	
R3084	ERJ3GEYJ183	M.RESISTOR CH 1/16W 18K	1	
R3085	ERJ3GEYJ333	M.RESISTOR CH 1/16W 33K	1	
R3086,87	ERJ3GEYJ563	M.RESISTOR CH 1/16W 56K	2	
R3088,89	ERJ3GEYG332	M.RESISTOR CH 1/16W 3.3K	2	
R3090	ERJ3GEYG102	M.RESISTOR CH 1/16W 1K	1	
R3091	ERJ3GEYJ101	M.RESISTOR CH 1/16W 100	1	
R3092,93	ERJ3GEYG102	M.RESISTOR CH 1/16W 1K	2	
R3094	ERJ3GEYJ333	M.RESISTOR CH 1/16W 33K	1	
R3095-97	ERJ3GEYG102	M.RESISTOR CH 1/16W 1K	3	
R3099	ERJ3GEYJ222	M.RESISTOR CH 1/16W 2.2K	1	
R3100-08	ERJ3GEYG102	M.RESISTOR CH 1/16W 1K	9	
R3112	ERJ3GEY0R00	M.RESISTOR CH 1/16W 0	1	
R3113-23	ERJ3GEYG102	M.RESISTOR CH 1/16W 1K	11	
R3125,26	ERJ3GEYG102	M.RESISTOR CH 1/16W 1K	2	
R3127	ERJ3GEYJ563	M.RESISTOR CH 1/16W 56K	1	
R3128	ERJ3GEYG102	M.RESISTOR CH 1/16W 1K	1	
R3129,30	ERJ3GEYJ222	M.RESISTOR CH 1/16W 2.2K	2	
R3131	ERJ3GEYJ562	M.RESISTOR CH 1/16W 5.6K	1	
R3132	ERJ3GEYG332	M.RESISTOR CH 1/16W 3.3K	1	
R3133,34	ERJ6RBD331	M.RESISTOR CH 1/10W 330	2	
R3137	ERJ3GEYG102	M.RESISTOR CH 1/16W 1K	1	
R3139	ERJ3GEYG102	M.RESISTOR CH 1/16W 1K	1	
R3141	ERJ3GEY0R00	M.RESISTOR CH 1/16W 0	1	
R3142	ERJ3GEYG102	M.RESISTOR CH 1/16W 1K	1	
R3143,44	ERJ3GEYJ272	M.RESISTOR CH 1/16W 2.7K	2	
R3150	ERJ3GEYG471	M.RESISTOR CH 1/16W 470	1	
R3151	ERJ3GEYJ333	M.RESISTOR CH 1/16W 33K	1	
R3152,53	ERJ3GEYJ103	M.RESISTOR CH 1/16W 10K	2	
R3154	ERJ3GEYJ223	M.RESISTOR CH 1/16W 22K	1	
R3155	ERJ3GEYJ105	M.RESISTOR CH 1/16W 1M	1	
R3156,57	ERJ3GEYG102	M.RESISTOR CH 1/16W 1K	2	
R3160,61	ERJ3GEYG102	M.RESISTOR CH 1/16W 1K	2	
R3162	ERJ3GEYJ101	M.RESISTOR CH 1/16W 100	1	
R3163	ERJ3GEYG102	M.RESISTOR CH 1/16W 1K	1	
R3164,65	ERJ6RBD822	M.RESISTOR CH 1/10W 8.2K	2	
R3166	ERJ6RBD222	M.RESISTOR CH 1/10W 2.2K	1	
R3167	ERJ6RBD512	M.RESISTOR CH 1/10W 5.1K	1	
R3168	ERJ3GEYJ101	M.RESISTOR CH 1/16W 100	1	
R3169	ERJ3GEYG152	M.RESISTOR CH 1/16W 1.5K	1	
R3170	ERJ3GEYJ823	M.RESISTOR CH 1/16W 82K	1	
R3171,72	ERJ3GEYJ333	M.RESISTOR CH 1/16W 33K	2	
R3173	ERJ3GEYJ103	M.RESISTOR CH 1/16W 10K	1	
R3174	ERJ3GEYJ105	M.RESISTOR CH 1/16W 1M	1	
R3175	ERJ3GEYJ391	M.RESISTOR CH 1/16W 390	1	
R3176	ERJ3GEYJ103	M.RESISTOR CH 1/16W 10K	1	
R3177,78	ERJ3GEYG472	M.RESISTOR CH 1/16W 4.7K	2	
R3179	ERJ3GEYJ333	M.RESISTOR CH 1/16W 33K	1	
R3180	ERJ3GEYJ681	M.RESISTOR CH 1/16W 680	1	
R3181	ERJ3GEYJ821	M.RESISTOR CH 1/16W 820	1	
R3182	ERJ3GEYJ183	M.RESISTOR CH 1/16W 18K	1	
R3183	ERJ3GEYJ101	M.RESISTOR CH 1/16W 100	1	

Ref.No.	Part No.	Part Name & Description	Pcs	Remarks
R3184,85	ERJ3GEYJ272	M.RESISTOR CH 1/16W 2.7K	2	
R3200	ERJ3GEY0R00	M.RESISTOR CH 1/16W 0	1	
R3202	ERJ3GEY0R00	M.RESISTOR CH 1/16W 0	1	
R3208-14	ERJ3GEYG102	M.RESISTOR CH 1/16W 1K	7	
R3216	ERJ3GEY0R00	M.RESISTOR CH 1/16W 0	1	
R3217-28	ERJ3GEYG102	M.RESISTOR CH 1/16W 1K	12	
R3230,31	ERJ3GEYJ272	M.RESISTOR CH 1/16W 2.7K	2	
R3232-34	ERJ3GEYG102	M.RESISTOR CH 1/16W 1K	3	
R3235	ERJ3GEYJ101	M.RESISTOR CH 1/16W 100	1	
R3237	ERJ3GEYG102	M.RESISTOR CH 1/16W 1K	1	
R3238	ERJ3GEYJ181	M.RESISTOR CH 1/16W 180	1	
R3240	ERJ3GEYG472	M.RESISTOR CH 1/16W 4.7K	1	
R3241	ERJ3GEYJ181	M.RESISTOR CH 1/16W 180	1	
R3242	ERJ6RBD682	M.RESISTOR CH 1/10W 6.8K	1	
R3243	ERJ3GEYJ222	M.RESISTOR CH 1/16W 2.2K	1	
R3244	ERJ3GEYG471	M.RESISTOR CH 1/16W 470	1	
R3245	ERJ3GEY0R00	M.RESISTOR CH 1/16W 0	1	
R3246	ERJ3GEYJ681	M.RESISTOR CH 1/16W 680	1	
R3248,49	ERJ3GEYJ272	M.RESISTOR CH 1/16W 2.7K	2	
R3250	ERJ3GEYG471	M.RESISTOR CH 1/16W 470	1	
R3251	ERJ3GEYJ333	M.RESISTOR CH 1/16W 33K	1	
R3252,53	ERJ3GEYJ103	M.RESISTOR CH 1/16W 10K	2	
R3254	ERJ3GEYG332	M.RESISTOR CH 1/16W 3.3K	1	
R3255	ERJ3GEYJ105	M.RESISTOR CH 1/16W 1M	1	
R3256,57	ERJ3GEYG102	M.RESISTOR CH 1/16W 1K	2	
R3260	ERJ3GEYG471	M.RESISTOR CH 1/16W 470	1	
R3261	ERJ3GEYJ333	M.RESISTOR CH 1/16W 33K	1	
R3262	ERJ3GEYJ103	M.RESISTOR CH 1/16W 10K	1	
R3263	ERJ3GEYG472	M.RESISTOR CH 1/16W 4.7K	1	
R3264	ERJ3GEYJ103	M.RESISTOR CH 1/16W 10K	1	
R3265	ERJ3GEYJ105	M.RESISTOR CH 1/16W 1M	1	
R3266	ERJ3GEYG102	M.RESISTOR CH 1/16W 1K	1	
R3267-69	ERJ3GEYJ101	M.RESISTOR CH 1/16W 100	3	
R3270	ERJ3GEYG102	M.RESISTOR CH 1/16W 1K	1	
R3271	ERJ3GEYJ101	M.RESISTOR CH 1/16W 100	1	
R3280,81	ERJ3GEYG102	M.RESISTOR CH 1/16W 1K	2	
R3282,83	ERJ3GEYG472	M.RESISTOR CH 1/16W 4.7K	2	
R3284	ERJ3GEYJ681	M.RESISTOR CH 1/16W 680	1	
R3285	ERJ3GEYG682	M.RESISTOR CH 1/16W 6.8K	1	
R3286	ERJ3GEYJ473	M.RESISTOR CH 1/16W 47K	1	
R3287,88	ERJ3GEYJ333	M.RESISTOR CH 1/16W 33K	2	
R3289	ERJ3GEYG102	M.RESISTOR CH 1/16W 1K	1	
R3291	ERJ3GEYG152	M.RESISTOR CH 1/16W 1.5K	1	
R3292	ERJ3GEYJ823	M.RESISTOR CH 1/16W 82K	1	
R3293	ERJ3GEYJ104	M.RESISTOR CH 1/16W 100K	1	
R3294	ERJ3GEYJ105	M.RESISTOR CH 1/16W 1M	1	
R3295	ERJ3GEYG102	M.RESISTOR CH 1/16W 1K	1	
R3296	ERJ3GEYJ272	M.RESISTOR CH 1/16W 2.7K	1	
R3300-13	ERJ3GEYJ103	M.RESISTOR CH 1/16W 10K	14	
R3315,16	ERJ3GEYJ103	M.RESISTOR CH 1/16W 10K	2	
R3317	ERJ3GEYG102	M.RESISTOR CH 1/16W 1K	1	
R3318-21	ERJ3GEYJ103	M.RESISTOR CH 1/16W 10K	4	
R3324	ERJ3GEYG102	M.RESISTOR CH 1/16W 1K	1	
R3325	ERJ3GEYJ101	M.RESISTOR CH 1/16W 100	1	
R3326	ERJ3GEYG102	M.RESISTOR CH 1/16W 1K	1	
R3327,28	ERJ3GEYJ101	M.RESISTOR CH 1/16W 100	2	
R3330	ERJ3GEYJ101	M.RESISTOR CH 1/16W 100	1	
R3332-34	ERJ3GEYJ101	M.RESISTOR CH 1/16W 100	3	
R3340,41	ERJ3GEYG102	M.RESISTOR CH 1/16W 1K	2	
R3342	ERJ3GEYJ101	M.RESISTOR CH 1/16W 100	1	
R3343	ERJ3GEY0R00	M.RESISTOR CH 1/16W 0	1	
R3344	ERJ3GEYJ222	M.RESISTOR CH 1/16W 2.2K	1	
R3345	ERJ3GEYJ101	M.RESISTOR CH 1/16W 100	1	
R3346	ERJ3GEYG102	M.RESISTOR CH 1/16W 1K	1	
R3351	ERJ3GEY0R00	M.RESISTOR CH 1/16W 0	1	
R3373	ERJ3GEYJ101	M.RESISTOR CH 1/16W 100	1	
R3374-86	ERJ3GEYG102	M.RESISTOR CH 1/16W 1K	13	
R3388-90	ERJ3GEYG102	M.RESISTOR CH 1/16W 1K	3	
R3391,92	ERJ3GEYJ101	M.RESISTOR CH 1/16W 100	2	
R3395-98	ERJ3GEYG102	M.RESISTOR CH 1/16W 1K	4	
R3400-07	ERJ3GEYJ103	M.RESISTOR CH 1/16W 10K	8	
R3409-16	ERJ3GEYJ103	M.RESISTOR CH 1/16W 10K	8	
R3421,22	ERJ3GEYJ103	M.RESISTOR CH 1/16W 10K	2	
R3428,29	ERJ3GEYJ681	M.RESISTOR CH 1/16W 680	2	
R3430	ERJ3GEYJ101	M.RESISTOR CH 1/16W 100	1	

Ref.No.	Part No.	Part Name & Description	Pcs	Remarks
R3432-39	ERJ3GEYJ560	M.RESISTOR CH 1/16W 56	8	
R3441	ERJ3GEY0R00	M.RESISTOR CH 1/16W 0	1	
R3442,43	ERJ3GEYJ560	M.RESISTOR CH 1/16W 56	2	
R3444-67	ERJ3GEYJ681	M.RESISTOR CH 1/16W 680	24	
R3468-91	ERJ3GEYJ330	M.RESISTOR CH 1/16W 33	24	
R3492	ERJ3GEYJ101	M.RESISTOR CH 1/16W 100	1	
R3493-97	ERJ3GEYJ560	M.RESISTOR CH 1/16W 56	5	
R3498,99	ERJ3GEYJ330	M.RESISTOR CH 1/16W 33	2	
R3500-02	ERJ3GEYJ101	M.RESISTOR CH 1/16W 100	3	
R3503	ERJ3GEY0R00	M.RESISTOR CH 1/16W 0	1	
R3506-08	ERJ3GEYG102	M.RESISTOR CH 1/16W 1K	3	
R3510-31	ERJ3GEYJ103	M.RESISTOR CH 1/16W 10K	22	
R3536-38	ERJ3GEY0R00	M.RESISTOR CH 1/16W 0	3	
R3541,42	ERJ3GEY0R00	M.RESISTOR CH 1/16W 0	2	
R3543,44	ERJ3GEYG102	M.RESISTOR CH 1/16W 1K	2	
R3550	ERJ3GEYG102	M.RESISTOR CH 1/16W 1K	1	
R3578-80	ERJ3GEYG102	M.RESISTOR CH 1/16W 1K	3	
R3581,82	ERJ3GEYJ101	M.RESISTOR CH 1/16W 100	2	
R3584-86	ERJ3GEYJ101	M.RESISTOR CH 1/16W 100	3	
R3588-90	ERJ3GEYJ101	M.RESISTOR CH 1/16W 100	3	
R3598	ERJ3GEY0R00	M.RESISTOR CH 1/16W 0	1	
R3650	ERJ3GEYG102	M.RESISTOR CH 1/16W 1K	1	
R3651-53	ERJ3GEYJ222	M.RESISTOR CH 1/16W 2.2K	3	
R3654	ERJ3GEYG332	M.RESISTOR CH 1/16W 3.3K	1	
R3655	ERJ3GEYJ221	M.RESISTOR CH 1/16W 220	1	
R3656,57	ERJ3GEYG822	M.RESISTOR CH 1/16W 8.2K	2	
R3658	ERJ3GEYJ103	M.RESISTOR CH 1/16W 10K	1	
R3659	ERJ3GEYJ684	M.RESISTOR CH 1/16W 680K	1	
R3660	ERJ3GEYJ104	M.RESISTOR CH 1/16W 100K	1	
R3661	ERJ3GEYJ221	M.RESISTOR CH 1/16W 220	1	
R3662	ERJ3GEYJ222	M.RESISTOR CH 1/16W 2.2K	1	
R3663	ERJ3GEYJ184	M.RESISTOR CH 1/16W 180K	1	
R3664	ERJ3GEYJ222	M.RESISTOR CH 1/16W 2.2K	1	
R3665	ERJ3GEYJ333	M.RESISTOR CH 1/16W 33K	1	
R3666	ERJ3GEYJ560	M.RESISTOR CH 1/16W 56	1	
R3667	ERJ3GEYJ222	M.RESISTOR CH 1/16W 2.2K	1	
R3668	ERJ3GEYJ101	M.RESISTOR CH 1/16W 100	1	
R3669	ERJ3GEYJ560	M.RESISTOR CH 1/16W 56	1	
R3700	ERJ6RBD561	M.RESISTOR CH 1/10W 560	1	
R3701,02	ERJ3GEYJ151	M.RESISTOR CH 1/16W 150	2	
R3703	ERJ3GEYJ222	M.RESISTOR CH 1/16W 2.2K	1	
R3704,05	ERJ3RBD331	M.RESISTOR CH 3W 330	2	
R3706	ERJ3GEYJ222	M.RESISTOR CH 1/16W 2.2K	1	
R3707	ERJ3GEYJ101	M.RESISTOR CH 1/16W 100	1	
R3709	ERJ3GEYJ181	M.RESISTOR CH 1/16W 180	1	
R3710	ERJ3GEYJ101	M.RESISTOR CH 1/16W 100	1	
R3711	ERJ3GEYG102	M.RESISTOR CH 1/16W 1K	1	
R3712	ERJ3GEYJ124	M.RESISTOR CH 1/16W 120K	1	
R3713	ERJ3RBD201	M.RESISTOR CH 3W 200	1	
R3715	ERJ3GEYG471	M.RESISTOR CH 1/16W 470	1	
R3716	ERJ3GEYJ222	M.RESISTOR CH 1/16W 2.2K	1	
R3717	ERJ3GEYJ151	M.RESISTOR CH 1/16W 150	1	
R3718	ERJ3GEYJ271	M.RESISTOR CH 1/16W 270	1	
R3719	ERJ3GEYJ222	M.RESISTOR CH 1/16W 2.2K	1	
R3720,21	ERJ3RBD471	M.RESISTOR CH 3W 470	2	
R3722	ERJ3GEYJ222	M.RESISTOR CH 1/16W 2.2K	1	
R3723	ERJ3GEYJ101	M.RESISTOR CH 1/16W 100	1	
R3724	ERJ3GEYJ181	M.RESISTOR CH 1/16W 180	1	
R3725	ERJ3GEYJ101	M.RESISTOR CH 1/16W 100	1	
R3726	ERJ6GEYG102	M.RESISTOR CH 1/10W 1K	1	
R3727	ERJ3GEYJ681	M.RESISTOR CH 1/16W 680	1	
R3728	ERJ3GEYJ391	M.RESISTOR CH 1/16W 390	1	
R3729	ERJ3GEYJ222	M.RESISTOR CH 1/16W 2.2K	1	
R3730	ERJ3GEYJ681	M.RESISTOR CH 1/16W 680	1	
R3731	ERJ3GEYG102	M.RESISTOR CH 1/16W 1K	1	
R3732	ERJ3GEYJ821	M.RESISTOR CH 1/16W 820	1	
R3733	ERJ3GEYJ681	M.RESISTOR CH 1/16W 680	1	
R3734	ERJ3GEYG102	M.RESISTOR CH 1/16W 1K	1	
R3735	ERJ3GEYG471	M.RESISTOR CH 1/16W 470	1	
R3736	ERJ6GEYG102	M.RESISTOR CH 1/10W 1K	1	
R3737	ERJ3GEYJ151	M.RESISTOR CH 1/16W 150	1	
R3739	ERJ3GEYJ181	M.RESISTOR CH 1/16W 180	1	
R3740	ERJ3GEYJ103	M.RESISTOR CH 1/16W 10K	1	
R3741	ERJ3GEYG102	M.RESISTOR CH 1/16W 1K	1	
R3744	ERJ3GEYJ470	M.RESISTOR CH 1/16W 47	1	

Ref.No.	Part No.	Part Name & Description	Pcs	Remarks
R3745,46	ERJ3GEYG102	M.RESISTOR CH 1/16W 1K	2	
R3747	ERJ3GEYJ222	M.RESISTOR CH 1/16W 2.2K	1	
R3748,49	ERJ3GEYJ151	M.RESISTOR CH 1/16W 150	2	
R3750	ERJ3GEYJ222	M.RESISTOR CH 1/16W 2.2K	1	
R3751,52	ERJ3RBD471	M.RESISTOR CH 3W 470	2	
R3753	ERJ3GEYJ222	M.RESISTOR CH 1/16W 2.2K	1	
R3754	ERJ3GEYJ101	M.RESISTOR CH 1/16W 100	1	
R3755	ERJ3GEYJ222	M.RESISTOR CH 1/16W 2.2K	1	
R3756	ERJ3GEYJ103	M.RESISTOR CH 1/16W 10K	1	
R3757,58	ERJ3GEYG332	M.RESISTOR CH 1/16W 3.3K	2	
R3761	ERJ3GEYJ681	M.RESISTOR CH 1/16W 680	1	
R3762	ERJ3GEYG102	M.RESISTOR CH 1/16W 1K	1	
R3763	ERJ3GEYJ821	M.RESISTOR CH 1/16W 820	1	
R3764	ERJ3GEYJ681	M.RESISTOR CH 1/16W 680	1	
R3765	ERJ3GEYG102	M.RESISTOR CH 1/16W 1K	1	
R3766	ERJ3GEYG471	M.RESISTOR CH 1/16W 470	1	
R3767	ERJ6GEYG102	M.RESISTOR CH 1/10W 1K	1	
R3768	ERJ3GEYJ270	M.RESISTOR CH 1/16W 27	1	
R3770	ERJ3GEYJ121	M.RESISTOR CH 1/16W 120	1	
R3771	ERJ3GEYJ103	M.RESISTOR CH 1/16W 10K	1	
R3772	ERJ3GEYG102	M.RESISTOR CH 1/16W 1K	1	
R3775	ERJ3GEYJ470	M.RESISTOR CH 1/16W 47	1	
R3776	ERJ3GEYJ222	M.RESISTOR CH 1/16W 2.2K	1	
R3777	ERJ3GEYJ221	M.RESISTOR CH 1/16W 220	1	
R3780	ERJ6GEY0R00	M.RESISTOR CH 1/10W 0	1	
R3781	ERJ3GEYJ681	M.RESISTOR CH 1/16W 680	1	
R3782	ERJ3GEYJ391	M.RESISTOR CH 1/16W 390	1	
R3783	ERJ3GEYJ222	M.RESISTOR CH 1/16W 2.2K	1	
R3784	ERJ3GEYJ221	M.RESISTOR CH 1/16W 220	1	
R3785	ERJ3GEYJ681	M.RESISTOR CH 1/16W 680	1	
R3786	ERJ3GEYJ391	M.RESISTOR CH 1/16W 390	1	
R3787	ERJ3GEYJ222	M.RESISTOR CH 1/16W 2.2K	1	
R3788	ERJ3GEYJ221	M.RESISTOR CH 1/16W 220	1	
R3797	ERJ3GEYJ333	M.RESISTOR CH 1/16W 33K	1	
R3798	ERJ6RBD151	M.RESISTOR CH 1/10W 150	1	
R3804	ERJ3GEYG471	M.RESISTOR CH 1/16W 470	1	
R3805,06	ERJ3GEYG472	M.RESISTOR CH 1/16W 4.7K	2	
R3807	ERJ3GEYG152	M.RESISTOR CH 1/16W 1.5K	1	
R3808	ERJ3GEYJ223	M.RESISTOR CH 1/16W 22K	1	
R3810	ERJ3GEYJ563	M.RESISTOR CH 1/16W 56K	1	
R3811,12	ERJ3GEYG472	M.RESISTOR CH 1/16W 4.7K	2	
R3814	ERJ3GEYJ821	M.RESISTOR CH 1/16W 820	1	
R3815	ERJ3GEYJ181	M.RESISTOR CH 1/16W 180	1	
R3816	ERJ3GEYJ821	M.RESISTOR CH 1/16W 820	1	
R3817	ERJ3GEYG152	M.RESISTOR CH 1/16W 1.5K	1	
R3818	ERJ3GEYJ470	M.RESISTOR CH 1/16W 47	1	
R3819,20	ERJ3GEYG102	M.RESISTOR CH 1/16W 1K	2	
R3821	ERJ3GEYG152	M.RESISTOR CH 1/16W 1.5K	1	
R3822	ERJ3GEYG102	M.RESISTOR CH 1/16W 1K	1	
R3823	ERJ3GEYG152	M.RESISTOR CH 1/16W 1.5K	1	
R3824,25	ERJ3GEYG102	M.RESISTOR CH 1/16W 1K	2	
R3826,27	ERJ3GEYG152	M.RESISTOR CH 1/16W 1.5K	2	
R3828	ERJ3GEYJ330	M.RESISTOR CH 1/16W 33	1	
R3829	ERJ3GEYJ681	M.RESISTOR CH 1/16W 680	1	
R3830	ERJ3GEYG472	M.RESISTOR CH 1/16W 4.7K	1	
R3831	ERJ3GEYJ105	M.RESISTOR CH 1/16W 1M	1	
R3832	ERJ3GEYJ154	M.RESISTOR CH 1/16W 150K	1	
R3833	ERJ3GEYG152	M.RESISTOR CH 1/16W 1.5K	1	
R3834-36	ERJ3GEYJ333	M.RESISTOR CH 1/16W 33K	3	
R3837	ERJ3GEYG152	M.RESISTOR CH 1/16W 1.5K	1	
R3838	ERJ3GEYJ470	M.RESISTOR CH 1/16W 47	1	
R3840-42	ERJ3GEYG102	M.RESISTOR CH 1/16W 1K	3	
R3843	ERJ3GEYJ101	M.RESISTOR CH 1/16W 100	1	
R3844	ERJ3GEYG152	M.RESISTOR CH 1/16W 1.5K	1	
R3846	ERJ3GEYG102	M.RESISTOR CH 1/16W 1K	1	
R3847	ERJ3GEYJ470	M.RESISTOR CH 1/16W 47	1	
R3848	ERJ3GEYG332	M.RESISTOR CH 1/16W 3.3K	1	
R3850	ERJ3GEYG102	M.RESISTOR CH 1/16W 1K	1	
R3851	ERJ3GEYJ470	M.RESISTOR CH 1/16W 47	1	
R3852	ERJ3GEYG332	M.RESISTOR CH 1/16W 3.3K	1	
R3853	ERJ3GEYJ103	M.RESISTOR CH 1/16W 10K	1	
R3854	ERJ3GEYJ391	M.RESISTOR CH 1/16W 390	1	
R3855	ERJ3GEYG471	M.RESISTOR CH 1/16W 470	1	
R3856	ERJ3GEYJ103	M.RESISTOR CH 1/16W 10K	1	
R3857	ERJ3GEYJ181	M.RESISTOR CH 1/16W 180	1	

Ref.No.	Part No.	Part Name & Description	Pcs	Remarks
R3858	ERJ3GEYJ681	M.RESISTOR CH 1/16W 680	1	
R3859	ERJ3GEYJ181	M.RESISTOR CH 1/16W 180	1	
R3860,61	ERJ3GEYJ562	M.RESISTOR CH 1/16W 5.6K	2	
R3862-64	ERJ3GEYJ223	M.RESISTOR CH 1/16W 22K	3	
R3865	ERJ3GEYG152	M.RESISTOR CH 1/16W 1.5K	1	
R3866	ERJ3GEYJ470	M.RESISTOR CH 1/16W 47	1	
R3867	ERJ3GEYG102	M.RESISTOR CH 1/16W 1K	1	
R3868	ERJ3GEYJ221	M.RESISTOR CH 1/16W 220	1	
R3872	ERJ3GEYG332	M.RESISTOR CH 1/16W 3.3K	1	
R3877	ERJ3GEYJ221	M.RESISTOR CH 1/16W 220	1	
R3878,79	ERJ6RBD301	M.RESISTOR CH 1/10W 300	2	
R3880	ERJ3GEYG332	M.RESISTOR CH 1/16W 3.3K	1	
R3881	ERJ3GEYJ562	M.RESISTOR CH 1/16W 5.6K	1	
R3882	ERJ3GEYG472	M.RESISTOR CH 1/16W 4.7K	1	
R3883	ERJ3GEYJ473	M.RESISTOR CH 1/16W 47K	1	
R3884	ERJ3GEYJ222	M.RESISTOR CH 1/16W 2.2K	1	
R3885	ERJ3GEYG332	M.RESISTOR CH 1/16W 3.3K	1	
R3886	ERJ3GEYJ562	M.RESISTOR CH 1/16W 5.6K	1	
R3887	ERJ3GEYG472	M.RESISTOR CH 1/16W 4.7K	1	
R3888	ERJ3GEYJ473	M.RESISTOR CH 1/16W 47K	1	
R3889	ERJ3GEYJ222	M.RESISTOR CH 1/16W 2.2K	1	
R3890,91	ERJ3GEYG102	M.RESISTOR CH 1/16W 1K	2	
R3895	ERJ3GEYJ222	M.RESISTOR CH 1/16W 2.2K	1	
R3896,97	ERJ3GEYG332	M.RESISTOR CH 1/16W 3.3K	2	
R3898	ERJ3GEYJ103	M.RESISTOR CH 1/16W 10K	1	
R3899	ERJ3GEYJ221	M.RESISTOR CH 1/16W 220	1	
R3900	ERJ3GEYG102	M.RESISTOR CH 1/16W 1K	1	
R3901	ERJ3GEYJ104	M.RESISTOR CH 1/16W 100K	1	
R3902	ERJ3GEYJ271	M.RESISTOR CH 1/16W 270	1	
R3903	ERJ3GEYJ181	M.RESISTOR CH 1/16W 180	1	
R3904	ERJ3GEYJ101	M.RESISTOR CH 1/16W 100	1	
R3905	ERJ3GEYJ222	M.RESISTOR CH 1/16W 2.2K	1	
R3906	ERJ3GEYJ103	M.RESISTOR CH 1/16W 10K	1	
R3907	ERJ6GEYG102	M.RESISTOR CH 1/10W 1K	1	
R3908	ERJ6RBD151	M.RESISTOR CH 1/10W 150	1	
R3909	ERJ3GEYJ470	M.RESISTOR CH 1/16W 47	1	
R3910,11	ERJ3GEYG472	M.RESISTOR CH 1/16W 4.7K	2	
R3912	ERJ3GEYG152	M.RESISTOR CH 1/16W 1.5K	1	
R3913	ERJ3GEYJ393	M.RESISTOR CH 1/16W 39K	1	
R3915,16	ERJ3GEYJ563	M.RESISTOR CH 1/16W 56K	2	
R3917	ERJ3GEYJ222	M.RESISTOR CH 1/16W 2.2K	1	
R3918	ERJ3GEYJ470	M.RESISTOR CH 1/16W 47	1	
R3919,20	ERJ3GEYG152	M.RESISTOR CH 1/16W 1.5K	2	
R3921	ERJ3GEYJ470	M.RESISTOR CH 1/16W 47	1	
R3922	ERJ3GEYG332	M.RESISTOR CH 1/16W 3.3K	1	
R3923	ERJ3GEYJ103	M.RESISTOR CH 1/16W 10K	1	
R3924	ERJ3GEYJ221	M.RESISTOR CH 1/16W 220	1	
R3925	ERJ3GEYJ562	M.RESISTOR CH 1/16W 5.6K	1	
R3926,27	ERJ6RBD821	M.RESISTOR CH 1/10W 820	2	
R3928,29	ERJ3GEYJ470	M.RESISTOR CH 1/16W 47	2	
R3930	ERJ3GEYJ563	M.RESISTOR CH 1/16W 56K	1	
R3931,32	ERJ6RBD821	M.RESISTOR CH 1/10W 820	2	
R3933	ERJ3GEYJ124	M.RESISTOR CH 1/16W 120K	1	
R3934,35	ERJ6RBD821	M.RESISTOR CH 1/10W 820	2	
R3936	VRE006610102	M.RESISTOR CH 1/10W 1K	1	
R3937	ERJ3GEYJ151	M.RESISTOR CH 1/16W 150	1	
R3938	ERJ3GEY0R00	M.RESISTOR CH 1/16W 0	1	
R3939	ERJ3GEYG102	M.RESISTOR CH 1/16W 1K	1	
R3940	ERJ3GEYG472	M.RESISTOR CH 1/16W 4.7K	1	
R3941	ERJ3GEYJ223	M.RESISTOR CH 1/16W 22K	1	
R3942,43	ERJ3GEYJ473	M.RESISTOR CH 1/16W 47K	2	
R3944	ERJ3GEYG472	M.RESISTOR CH 1/16W 4.7K	1	
R3945	ERJ3GEYJ223	M.RESISTOR CH 1/16W 22K	1	
R3948	ERJ3GEYJ681	M.RESISTOR CH 1/16W 680	1	
R3949	ERJ3GEYJ391	M.RESISTOR CH 1/16W 390	1	
R3950	ERJ3GEYG332	M.RESISTOR CH 1/16W 3.3K	1	
R3951	ERJ3GEYG472	M.RESISTOR CH 1/16W 4.7K	1	
R3952	ERJ3GEYJ153	M.RESISTOR CH 1/16W 15K	1	
R3953	ERJ3GEYJ821	M.RESISTOR CH 1/16W 820	1	
R3954	ERJ3GEYG472	M.RESISTOR CH 1/16W 4.7K	1	
R3955,56	ERJ3GEYJ221	M.RESISTOR CH 1/16W 220	2	
R3957	ERJ3GEYG102	M.RESISTOR CH 1/16W 1K	1	
R3958	ERJ3GEYG332	M.RESISTOR CH 1/16W 3.3K	1	
R3959	ERJ3GEYG102	M.RESISTOR CH 1/16W 1K	1	
R3960,61	ERJ3GEYJ221	M.RESISTOR CH 1/16W 220	2	

Ref.No.	Part No.	Part Name & Description	Pcs	Remarks
R3962	ERJ6RBD221	M.RESISTOR CH 1/10W 220	1	
R3965	ERJ6RBD201	M.RESISTOR CH 1/10W 200	1	
R3966	ERJ3GEYJ222	M.RESISTOR CH 1/16W 2.2K	1	
R3967	ERJ6RBD151	M.RESISTOR CH 1/10W 150	1	
R3969	ERJ3GEYJ222	M.RESISTOR CH 1/16W 2.2K	1	
R3970	ERJ6RBD121	M.RESISTOR CH 1/10W 120	1	
R3972	ERJ3GEYJ222	M.RESISTOR CH 1/16W 2.2K	1	
R3973	ERJ6RBD121	M.RESISTOR CH 1/10W 120	1	
R3975	ERJ6RBD391	M.RESISTOR CH 1/10W 390	1	
R3976	ERJ6RED270	M.RESISTOR CH 1/10W 27	1	
R3977	ERJ3GEYJ151	M.RESISTOR CH 1/16W 150	1	
R3978	ERJ3GEYJ222	M.RESISTOR CH 1/16W 2.2K	1	
R3979	ERJ3GEYG471	M.RESISTOR CH 1/16W 470	1	
R3980	ERJ3GEYJ222	M.RESISTOR CH 1/16W 2.2K	1	
R3981	ERJ3GEYG471	M.RESISTOR CH 1/16W 470	1	
R3982	ERJ3GEYJ222	M.RESISTOR CH 1/16W 2.2K	1	
R3983-85	ERJ3GEYJ470	M.RESISTOR CH 1/16W 47	3	
R3986	ERJ3GEYJ223	M.RESISTOR CH 1/16W 22K	1	
R3987	ERJ3GEYJ473	M.RESISTOR CH 1/16W 47K	1	
R3988	ERJ3GEYJ272	M.RESISTOR CH 1/16W 2.7K	1	
R3989	ERJ3GEYJ470	M.RESISTOR CH 1/16W 47	1	
R3990	ERJ3GEYJ821	M.RESISTOR CH 1/16W 820	1	
R3991	ERJ3GEYJ470	M.RESISTOR CH 1/16W 47	1	
R3992,93	ERJ3GEYJ681	M.RESISTOR CH 1/16W 680	2	
R3994	ERJ3GEYJ391	M.RESISTOR CH 1/16W 390	1	
R3995	ERJ3GEYG102	M.RESISTOR CH 1/16W 1K	1	
R3996	ERJ3GEY0R00	M.RESISTOR CH 1/16W 0	1	
R3997,98	ERJ3GEYJ470	M.RESISTOR CH 1/16W 47	2	
R3999	ERJ3GEYJ100	M.RESISTOR CH 1/16W 10	1	
TG3001-04	VJR0646	TEST POINT	4	
TH3800	ERTD2FHL102S	THERMISTOR 1K	1	
TP3070	VJR0646	TEST POINT	1	
TP3100-06	VJR0646	TEST POINT	7	
TP3200	VJR0646	TEST POINT	1	
TP3650,51	VJR0646	TEST POINT	2	
TP3950	VJR0646	TEST POINT	1	
VC3070	ECV1ZW20X53T	TRIMMER	1	
VC3800	ECV1ZW20X53T	TRIMMER	1	
VR3100	VRV0113B202	V.RESISTOR 2K	1	
VR3101	VRV0113B502	V.RESISTOR 5K	1	
VR3102	VRV0113B202	V.RESISTOR 2K	1	
VR3160	VRV0161B203	V.RESISTOR 20K	1	
VR3201	VRV0161B502	V.RESISTOR 5K	1	
VR3260	VRV0161B502	V.RESISTOR 5K	1	
VR3280	VRV0161B203	V.RESISTOR 20K	1	
VR3700	VRV0161B101	V.RESISTOR 100	1	
VR3701	VRV0113B501	V.RESISTOR 500	1	
VR3702	VRV0161B102	V.RESISTOR 1K	1	
VR3703	VRV0113B102	V.RESISTOR 1K	1	
VR3704	VRV0161B101	V.RESISTOR 100	1	
VR3705	VRV0161B102	V.RESISTOR 1K	1	
VR3706	VRV0161B101	V.RESISTOR 100	1	
VR3801	VRV0161B203	V.RESISTOR 20K	1	
VR3802,03	VRV0161B502	V.RESISTOR 5K	2	
VR3804,05	VRV0161B102	V.RESISTOR 1K	2	
VR3806,07	VRV0161B202	V.RESISTOR 2K	2	
VR3808	VRV0161B102	V.RESISTOR 1K	1	
VR3900	VRV0161B502	V.RESISTOR 5K	1	
VR3901	VRV0113B102	V.RESISTOR 1K	1	
VR3902	VRV0113B502	V.RESISTOR 5K	1	
VR3903	VRV0161B102	V.RESISTOR 1K	1	
VR3950	VRV0113B102	V.RESISTOR 1K	1	
VR3995	VRV0113B501	V.RESISTOR 500	1	
VR3996	VRV0113B102	V.RESISTOR 1K	1	
X3070	VSX0363	CRYSTAL OSCILLATOR	1	
X3150	VSX0567A	CRYSTAL OSCILLATOR	1	
X3160	VSX0270	CRYSTAL OSCILLATOR	1	
X3250	VSX0567A	CRYSTAL OSCILLATOR	1	
X3260	VSX0788	CRYSTAL OSCILLATOR	1	

Ref.No.	Part No.	Part Name & Description	Pcs	Remarks
X3280	VSX0270	CRYSTAL OSCILLATOR	1	
		MISCELLANEOUS		
	VML2143	CARD PULLER	1	
	VML2144	CARD PULLER	1	

Ref.No.	Part No.	Part Name & Description	Pcs	Remarks
■E5	VEP83394A	F5 REC PB P.C.BOARD	1	(RTL)
■	VEP83405A	V BLK SUB P.C.BOARD	1	(RTL)FOR VEP83394A
C1	ECUX1E104ZFV	C.CAPACITOR CH 25V 0.1U	1	FOR VEP83405A
C1	ECUX1H101JCV	C.CAPACITOR CH 50V 100P	1	
C2	ECUX1E104ZFV	C.CAPACITOR CH 25V 0.1U	1	FOR VEP83405A
C2	ECUX1H101JCV	C.CAPACITOR CH 50V 100P	1	
C3	ECUX1E104ZFV	C.CAPACITOR CH 25V 0.1U	1	FOR VEP83405A
C3	ECUX1H101JCV	C.CAPACITOR CH 50V 100P	1	
C4,C5	ECUX1E104ZFV	C.CAPACITOR CH 25V 0.1U	2	FOR VEP83405A
C6	ECUX1H330JCV	C.CAPACITOR CH 50V 33P	1	FOR VEP83405A
C20-22	ECUX1E104ZFV	C.CAPACITOR CH 25V 0.1U	3	FOR VEP83405A
C23-25	ECEV1CV100Q	E.CAPACITOR CH 16V 10U	3	FOR VEP83405A
C26-28	ECUX1E104ZFV	C.CAPACITOR CH 25V 0.1U	3	FOR VEP83405A
C29,30	ECUX1H102JCV	C.CAPACITOR CH 50V 1000P	2	FOR VEP83405A
C31-33	ECUX1E104ZFV	C.CAPACITOR CH 25V 0.1U	3	FOR VEP83405A
C34	ECEV1EN3R3Q	E.CAPACITOR CH 25V 3.3U	1	FOR VEP83405A
C35	ECUX1E104ZFV	C.CAPACITOR CH 25V 0.1U	1	FOR VEP83405A
C36	ECUX1H102JCV	C.CAPACITOR CH 50V 1000P	1	FOR VEP83405A
C37-39	ECUX1E104ZFV	C.CAPACITOR CH 25V 0.1U	3	FOR VEP83405A
C50,51	ECUX1E104ZFV	C.CAPACITOR CH 25V 0.1U	2	
C51	ECUX1E104ZFV	C.CAPACITOR CH 25V 0.1U	1	FOR VEP83405A
C52	ECEV0JV330Q	E.CAPACITOR CH6.3V 33U	1	
C61	ECUX1E104ZFV	C.CAPACITOR CH 25V 0.1U	1	
C62	ECUX1E104ZFV	C.CAPACITOR CH 25V 0.1U	1	
C63	ECUX1E104ZFV	C.CAPACITOR CH 25V 0.1U	1	
C64	ECUX1E104ZFV	C.CAPACITOR CH 25V 0.1U	1	
C66	ECUX1E104ZFV	C.CAPACITOR CH 25V 0.1U	1	
C67	ECUX1E104ZFV	C.CAPACITOR CH 25V 0.1U	1	
C68	ECUX1E104ZFV	C.CAPACITOR CH 25V 0.1U	1	
C68	ECUX1E104ZFV	C.CAPACITOR CH 25V 0.1U	1	FOR VEP83405A
C69-71	ECEV1CV100Q	E.CAPACITOR CH 16V 10U	3	
C72-87	ECUX1E104ZFV	C.CAPACITOR CH 25V 0.1U	16	
C88-95	ECEV0JV330Q	E.CAPACITOR CH6.3V 33U	8	
C96,97	ECUX1E104ZFV	C.CAPACITOR CH 25V 0.1U	2	
C98	ECEV0JV330Q	E.CAPACITOR CH6.3V 33U	1	
C99,00	ECUX1E104ZFV	C.CAPACITOR CH 25V 0.1U	2	
C101	ECUX1E104ZFV	C.CAPACITOR CH 25V 0.1U	1	
C103	ECUX1E104ZFV	C.CAPACITOR CH 25V 0.1U	1	
C104	ECUX1E104ZFV	C.CAPACITOR CH 25V 0.1U	1	
C105	ECUX1E104ZFV	C.CAPACITOR CH 25V 0.1U	1	
C107	ECUX1E104ZFV	C.CAPACITOR CH 25V 0.1U	1	
C108	ECUX1E104ZFV	C.CAPACITOR CH 25V 0.1U	1	
C109	ECUX1E104ZFV	C.CAPACITOR CH 25V 0.1U	1	
C110	ECUX1E104ZFV	C.CAPACITOR CH 25V 0.1U	1	
C111	ECUX1E104ZFV	C.CAPACITOR CH 25V 0.1U	1	
C112	ECUX1E104ZFV	C.CAPACITOR CH 25V 0.1U	1	
C113	ECUX1E104ZFV	C.CAPACITOR CH 25V 0.1U	1	FOR VEP83405A
C113	ECUX1H103KBV	C.CAPACITOR CH 50V 0.01U	1	
C114	ECUX1E104ZFV	C.CAPACITOR CH 25V 0.1U	1	
C115	ECUX1E104ZFV	C.CAPACITOR CH 25V 0.1U	1	
C116	ECUX1E104ZFV	C.CAPACITOR CH 25V 0.1U	1	
C117	ECUX1E104ZFV	C.CAPACITOR CH 25V 0.1U	1	
C118	ECUX1E104ZFV	C.CAPACITOR CH 25V 0.1U	1	
C120	ECUX1E104ZFV	C.CAPACITOR CH 25V 0.1U	1	FOR VEP83405A
C130-36	ECUX1E104ZFV	C.CAPACITOR CH 25V 0.1U	7	
C170-76	ECUX1E104ZFV	C.CAPACITOR CH 25V 0.1U	7	
C178	ECUX1H103KBV	C.CAPACITOR CH 50V 0.01U	1	
C179-81	ECUX1E104ZFV	C.CAPACITOR CH 25V 0.1U	3	
C182	ECUX1H103KBV	C.CAPACITOR CH 50V 0.01U	1	
C183	ECUX1E104ZFV	C.CAPACITOR CH 25V 0.1U	1	
C184	ECUX1H331JCV	C.CAPACITOR CH 50V 330P	1	
C185	ECEV1CV100Q	E.CAPACITOR CH 16V 10U	1	
C186,87	ECUX1E104ZFV	C.CAPACITOR CH 25V 0.1U	2	
C188	ECEV1CV100Q	E.CAPACITOR CH 16V 10U	1	
C189-92	ECUX1E104ZFV	C.CAPACITOR CH 25V 0.1U	4	
C193	ECUX1H222KBV	C.CAPACITOR CH 50V 2200P	1	
C194	ECEV1EN3R3Q	E.CAPACITOR CH 25V 3.3U	1	
C195	ECUX1H101JCV	C.CAPACITOR CH 50V 100P	1	
C196	ECUX1H470JCV	C.CAPACITOR CH 50V 47P	1	
C197	ECUX1E104ZFV	C.CAPACITOR CH 25V 0.1U	1	
C198	ECEV1EN3R3Q	E.CAPACITOR CH 25V 3.3U	1	
C199	ECEV1CV100Q	E.CAPACITOR CH 16V 10U	1	

Ref.No.	Part No.	Part Name & Description	Pcs	Remarks
C200	ECUX1H102JCV	C.CAPACITOR CH 50V 1000P	1	
C201	ECEV1CV100Q	E.CAPACITOR CH 16V 10U	1	
C202	ECUX1E104ZFV	C.CAPACITOR CH 25V 0.1U	1	
C203	ECUX1H050CCV	C.CAPACITOR CH 50V 5P	1	
C204	ECUX1E104ZFV	C.CAPACITOR CH 25V 0.1U	1	
C205	ECUX1H151JCV	C.CAPACITOR CH 50V 150P	1	
C206	ECUX1H102JCV	C.CAPACITOR CH 50V 1000P	1	
C207	ECUX1H470JCV	C.CAPACITOR CH 50V 47P	1	
C209	ECUX1H050CCV	C.CAPACITOR CH 50V 5P	1	
C210	ECUX1E104ZFV	C.CAPACITOR CH 25V 0.1U	1	
C211	ECUX1H101JCV	C.CAPACITOR CH 50V 100P	1	
C212	VCK0150	C.CAPACITOR	1	
C213,14	ECUX1H101JCV	C.CAPACITOR CH 50V 100P	2	
C215,16	ECUX1E104ZFV	C.CAPACITOR CH 25V 0.1U	2	
C219,20	ECUX1E104ZFV	C.CAPACITOR CH 25V 0.1U	2	
C300-05	ECUX1E104ZFV	C.CAPACITOR CH 25V 0.1U	6	
C306	ECUX1H102JCV	C.CAPACITOR CH 50V 1000P	1	
C307-15	ECUX1E104ZFV	C.CAPACITOR CH 25V 0.1U	9	
C330,31	ECUX1E104ZFV	C.CAPACITOR CH 25V 0.1U	2	
C333-35	ECUX1E104ZFV	C.CAPACITOR CH 25V 0.1U	3	
C336	ECUX1H102JCV	C.CAPACITOR CH 50V 1000P	1	
C337-56	ECUX1E104ZFV	C.CAPACITOR CH 25V 0.1U	20	
C380	ECUX1E104ZFV	C.CAPACITOR CH 25V 0.1U	1	
C381	ECUX1H102JCV	C.CAPACITOR CH 50V 1000P	1	
C382-88	ECUX1E104ZFV	C.CAPACITOR CH 25V 0.1U	7	
C400-03	ECUX1E104ZFV	C.CAPACITOR CH 25V 0.1U	4	
C404	ECUX1H102JCV	C.CAPACITOR CH 50V 1000P	1	
C405	ECUX1H103KBV	C.CAPACITOR CH 50V 0.01U	1	
C406-10	ECUX1E104ZFV	C.CAPACITOR CH 25V 0.1U	5	
C420	ECUX1H102JCV	C.CAPACITOR CH 50V 1000P	1	
C421	ECUX1H103KBV	C.CAPACITOR CH 50V 0.01U	1	
C422	ECUX1E104ZFV	C.CAPACITOR CH 25V 0.1U	1	
C423	ECUX1H100DCV	C.CAPACITOR CH 50V 10P	1	
C424	ECUX1E104ZFV	C.CAPACITOR CH 25V 0.1U	1	
C425	ECUX1H102JCV	C.CAPACITOR CH 50V 1000P	1	
C426	ECUX1E104ZFV	C.CAPACITOR CH 25V 0.1U	1	
C427	ECUX1H180JCV	C.CAPACITOR CH 50V 18P	1	
C428	ECUX1E104ZFV	C.CAPACITOR CH 25V 0.1U	1	
C440	ECUX1E104ZFV	C.CAPACITOR CH 25V 0.1U	1	
C441	ECUX1H102JCV	C.CAPACITOR CH 50V 1000P	1	
C442	ECUX1E104ZFV	C.CAPACITOR CH 25V 0.1U	1	
C443	ECUX1H102JCV	C.CAPACITOR CH 50V 1000P	1	
C444-50	ECUX1E104ZFV	C.CAPACITOR CH 25V 0.1U	7	
C460-65	ECUX1E104ZFV	C.CAPACITOR CH 25V 0.1U	6	
C467-70	ECUX1E104ZFV	C.CAPACITOR CH 25V 0.1U	4	
C471	ECEV0JV330Q	E.CAPACITOR CH6.3V 33U	1	
C472	ECUX1E104ZFV	C.CAPACITOR CH 25V 0.1U	1	
C473	ECUX1H180JCV	C.CAPACITOR CH 50V 18P	1	
C474	ECUX1H682KBV	C.CAPACITOR CH 50V 6800P	1	
C475	ECEV0JV330Q	E.CAPACITOR CH6.3V 33U	1	
C476	ECUX1E104ZFV	C.CAPACITOR CH 25V 0.1U	1	
C477	ECUX1H102JCV	C.CAPACITOR CH 50V 1000P	1	
C478	ECUX1H682KBV	C.CAPACITOR CH 50V 6800P	1	
C479	ECUX1H180JCV	C.CAPACITOR CH 50V 18P	1	
C481	ECEV1CV100Q	E.CAPACITOR CH 16V 10U	1	
C482	ECEV1HV2R2Q	E.CAPACITOR CH 50V 2.2U	1	
C483	ECUX1E104ZFV	C.CAPACITOR CH 25V 0.1U	1	
C484	VCK0151	C.CAPACITOR	1	
C485	ECEV1CV100Q	E.CAPACITOR CH 16V 10U	1	
C486	ECEV1HV2R2Q	E.CAPACITOR CH 50V 2.2U	1	
C487	ECUX1E104ZFV	C.CAPACITOR CH 25V 0.1U	1	
C488	ECEV0JV330Q	E.CAPACITOR CH6.3V 33U	1	
C489,90	ECUX1E104ZFV	C.CAPACITOR CH 25V 0.1U	2	
C491	ECUX1H682KBV	C.CAPACITOR CH 50V 6800P	1	
C492	ECUX1H180JCV	C.CAPACITOR CH 50V 18P	1	
C493-00	ECUX1E104ZFV	C.CAPACITOR CH 25V 0.1U	8	
C510-18	ECUX1E104ZFV	C.CAPACITOR CH 25V 0.1U	9	
C519	ECUX1H102JCV	C.CAPACITOR CH 50V 1000P	1	
C520-23	ECUX1E104ZFV	C.CAPACITOR CH 25V 0.1U	4	
C542-44	ECUX1E104ZFV	C.CAPACITOR CH 25V 0.1U	3	
C549,50	ECUX1E104ZFV	C.CAPACITOR CH 25V 0.1U	2	
C670-74	ECUX1E104ZFV	C.CAPACITOR CH 25V 0.1U	5	
C760-71	ECUX1E104ZFV	C.CAPACITOR CH 25V 0.1U	12	
C780-82	ECUX1E104ZFV	C.CAPACITOR CH 25V 0.1U	3	
C784	ECUX1E104ZFV	C.CAPACITOR CH 25V 0.1U	1	

Ref.No.	Part No.	Part Name & Description	Pcs	Remarks
C800-11	ECUX1E104ZFV	C.CAPACITOR CH 25V 0.1U	12	
C840	ECUX1H102JCV	C.CAPACITOR CH 50V 1000P	1	
C841-44	ECUX1E104ZFV	C.CAPACITOR CH 25V 0.1U	4	
C870	ECUX1H103KBV	C.CAPACITOR CH 50V 0.01U	1	
C871,72	ECUX1E104ZFV	C.CAPACITOR CH 25V 0.1U	2	
C910,11	ECUX1E104ZFV	C.CAPACITOR CH 25V 0.1U	2	
C912	ECUX1H150JCV	C.CAPACITOR CH 50V 15P	1	
C913	ECUX1H120JCV	C.CAPACITOR CH 50V 12P	1	
C914	ECUX1H103KBV	C.CAPACITOR CH 50V 0.01U	1	
C915	ECUX1E104ZFV	C.CAPACITOR CH 25V 0.1U	1	
C916-18	ECUX1H102JCV	C.CAPACITOR CH 50V 1000P	3	
C980-86	ECUX1E104ZFV	C.CAPACITOR CH 25V 0.1U	7	
C987	ECUX1H102JCV	C.CAPACITOR CH 50V 1000P	1	
C1022,23	ECUX1E104ZFV	C.CAPACITOR CH 25V 0.1U	2	
C1026-29	ECUX1E104ZFV	C.CAPACITOR CH 25V 0.1U	4	
C1050-54	ECUX1E104ZFV	C.CAPACITOR CH 25V 0.1U	5	
C1060-65	ECUX1E104ZFV	C.CAPACITOR CH 25V 0.1U	6	
C1110	ECUX1E104ZFV	C.CAPACITOR CH 25V 0.1U	1	
D20,21	MA152WK	DIODE	2	FOR VEP83405A
D60-63	MA701A	DIODE	4	
D170	MA715	DIODE	1	
D171	MA335	DIODE	1	
D172,73	MA152WK	DIODE	2	
FL60-63	VLF0576	FILTER	4	
FL460	VLF1118	FILTER	1	
FL461	VLF1116	FILTER	1	
FL462	VLF1117	FILTER	1	
IC20	NJM78L09UA	IC	1	FOR VEP83405A
IC21	NJM78L05UA	IC	1	FOR VEP83405A
IC22	NJM79L09UA	IC	1	FOR VEP83405A
IC23	MM74HC221AM	IC	1	FOR VEP83405A
IC24	MC74HC125AF	IC	1	FOR VEP83405A
IC25	NJM082BM	IC	1	FOR VEP83405A
IC51	T203E3801AF1	IC	1	FOR VEP83405A
IC52,53	T74VHC244F	IC	2	FOR VEP83405A
IC54,55	TC7S04F	IC	2	FOR VEP83405A
IC56	T74VHC244F	IC	1	FOR VEP83405A
IC61	NJM78L09UA	IC	1	
IC62	NJM79L09UA	IC	1	
IC63	NJM78L05UA	IC	1	
IC65-67	XC62AP3202P	IC	3	
IC68	XC62AP2302PL	IC	1	
IC69-71	XC62AP3202P	IC	3	
IC72	XC62AP2302PL	IC	1	
IC73,74	XC62AP3202P	IC	2	
IC75	74F244SJ	IC	1	
IC101	EPF10K20TC-4	IC	1	FOR VEP83405A
IC101	SN74S1051NS	IC	1	
IC102	CY7C19920ZC	IC	1	FOR VEP83405A
IC102	SN74S1051NS	IC	1	
IC103	74F541SJ	IC	1	
IC103	S80726ANDP	IC	1	FOR VEP83405A
IC104	74F541SJ	IC	1	
IC104	VSI3028A	IC	1	FOR VEP83405A
IC105	CY7C19920ZC	IC	1	FOR VEP83405A
IC105	TC7S04F	IC	1	
IC106	74F245SJ	IC	1	
IC107	74F138SJ	IC	1	
IC108,09	UPD71055GB	IC	2	
IC110	T74VHC244F	IC	1	
IC111	UPD71055GB	IC	1	
IC112	TC7S08F	IC	1	
IC114	74AC139SJ	IC	1	
IC115	74F244SJ	IC	1	
IC116	TC7S04F	IC	1	
IC130	TCVHC153F	IC	1	
IC131	UPD65841G025	IC	1	
IC132,33	T74VHCT244F	IC	2	
IC170	NJM082BM	IC	1	
IC171	NJM319M	IC	1	
IC172	MC74HC125AF	IC	1	
IC173	TC7S66F	IC	1	

Ref.No.	Part No.	Part Name & Description	Pcs	Remarks
IC174,75	NJM082BM	IC	2	
IC176	TC7S04F	IC	1	
IC177	UPC2384GA	IC	1	
IC178	74F244SJ	IC	1	
IC181	74F244SJ	IC	1	
IC184	T74LCX244F	IC	1	
IC185	MC10H124M	IC	1	
IC186-88	T74LCX244F	IC	3	
IC189	XC62AP3202P	IC	1	
IC190	TC7S08F	IC	1	
IC300,01	T74VHC244F	IC	2	
IC302	MN67372A2	IC	1	
IC303	MN4707F	IC	1	
IC304	T74VHC244F	IC	1	
IC330	T74VHC244F	IC	1	
IC331	MC10H125M	IC	1	
IC332	T74LCX244F	IC	1	
IC334	M65401FP	IC	1	
IC335	MN673711	IC	1	
IC336-39	T74VHC245F	IC	4	
IC380	L7A1433	IC	1	
IC381	TC7S66F	IC	1	
IC382	MB81V4260S7	IC	1	
IC400	L7A1434	IC	1	
IC401	MC10H124M	IC	1	
IC402,03	TC7S08F	IC	2	
IC420	L7A1434	IC	1	
IC440	T74VHC08F	IC	1	
IC441	L7A1433	IC	1	
IC442	TC7S66F	IC	1	
IC443	MB81V4260S7	IC	1	
IC461	MN673711	IC	1	
IC462	M65401FP	IC	1	
IC463	M52660FP	IC	1	
IC464	TCVHC257F	IC	1	
IC465	T74VHCT244F	IC	1	
IC466	EPM7128STC15	IC	1	BLANK ROM
ID466	VVVSI3084A		1	SOFTWARE
IC510	MN67372A2	IC	1	
IC511	T74VHC244F	IC	1	
IC512	MN4707F	IC	1	
IC540,41	T74VHC244F	IC	2	
IC544	T74VHC32F	IC	1	
IC545,46	TC4W53F	IC	2	
IC670	T74VHC244F	IC	1	
IC671	T160G70-1601	IC	1	
IC760-63	UPD42280G3	IC	4	
IC764-67	74ALS541SJ	IC	4	
IC780	EPM7128STC15	IC	1	BLANK ROM
ID780	VVVSI3084A		1	SOFTWARE
IC782	T74VHC244F	IC	1	
IC783	D485505G25	IC	1	
IC784	T74VHC244F	IC	1	
IC800	UPD42280G3	IC	1	
IC801	MC10H125M	IC	1	
IC802,03	T74LCX244F	IC	2	
IC804	T74VHC74F	IC	1	
IC805	UPD65843G026	IC	1	
IC840	UPD65868D022	IC	1	
IC870	VSI2705	IC	1	
IC871	T74VHC08F	IC	1	
IC910	VSI2705	IC	1	
IC911	T74VHC08F	IC	1	
IC912	T74VHCU04F	IC	1	
IC913	S80727ANDQ	IC	1	
IC980	T74VHC244F	IC	1	
IC981-83	TCVHC257F	IC	3	
IC984,85	T74VHCT244F	IC	2	
IC986	T74VHC74F	IC	1	
IC1021	UPD42280G3	IC	1	
IC1050,51	T74VHC244F	IC	2	
IC1052	TC7S04F	IC	1	
IC1053,54	T74VHC244F	IC	2	
IC1110	T74VHC244F	IC	1	

Ref.No.	Part No.	Part Name & Description	Pcs	Remarks
IS104	VJS3109	CONNECTOR (FEMALE)	1	FOR VEP83405A
L60-62	VLP0133	COIL	3	
L170-72	VLQ0319K470	COIL 47UH	3	
L174	VLQ0319M1R5	COIL 1.5UH	1	
L175	VLQ0163J3R9	COIL 3.9UH	1	
L176	VLQ0319K470	COIL 47UH	1	
L420	VLQ0163J1R5	COIL 1.5UH	1	
L460-62	VLQ0319K100	COIL 10UH	3	
P1	VJP3454B096	CONNECTOR (MALE)	1	
P1	VJS4064N160	CONNECTOR	1	FOR VEP83405A
P2	VJP3454B096	CONNECTOR (MALE)	1	
P60	VJP1246T	CONNECTOR (MALE) 6P	1	
P1050	VJP3418B060	CONNECTOR (MALE)	1	
P1060	VJP4064N160C	CONNECTOR (MALE)	1	
Q170	2SC2295-C	TRANSISTOR	1	
R1	ERJ3GEY0R00	M.RESISTOR CH 1/16W 0	1	FOR VEP83405A
R1	ERJ3GEYJ470	M.RESISTOR CH 1/16W 47	1	
R2	ERJ3GEY0R00	M.RESISTOR CH 1/16W 0	1	FOR VEP83405A
R2	ERJ3GEYJ470	M.RESISTOR CH 1/16W 47	1	
R3	ERJ3GEY0R00	M.RESISTOR CH 1/16W 0	1	FOR VEP83405A
R3-19	ERJ3GEYJ470	M.RESISTOR CH 1/16W 47	17	
R20	ERJ3GEYJ473	M.RESISTOR CH 1/16W 47K	1	FOR VEP83405A
R21	ERJ3GEYJ273	M.RESISTOR CH 1/16W 27K	1	FOR VEP83405A
R21	ERJ3GEYJ470	M.RESISTOR CH 1/16W 47	1	
R22	ERJ3GEYG471	M.RESISTOR CH 1/16W 470	1	FOR VEP83405A
R22	ERJ3GEYJ470	M.RESISTOR CH 1/16W 47	1	
R23	ERJ3GEYJ103	M.RESISTOR CH 1/16W 10K	1	FOR VEP83405A
R23	ERJ3GEYJ470	M.RESISTOR CH 1/16W 47	1	
R24	ERJ3GEYJ103	M.RESISTOR CH 1/16W 10K	1	FOR VEP83405A
R24	ERJ3GEYJ470	M.RESISTOR CH 1/16W 47	1	
R25	ERJ3GEYJ153	M.RESISTOR CH 1/16W 15K	1	FOR VEP83405A
R25	ERJ3GEYJ470	M.RESISTOR CH 1/16W 47	1	
R26	ERJ3GEYJ223	M.RESISTOR CH 1/16W 22K	1	FOR VEP83405A
R26	ERJ3GEYJ470	M.RESISTOR CH 1/16W 47	1	
R27	ERJ3GEYJ105	M.RESISTOR CH 1/16W 1M	1	FOR VEP83405A
R27	ERJ3GEYJ470	M.RESISTOR CH 1/16W 47	1	
R28	ERJ3GEYG102	M.RESISTOR CH 1/16W 1K	1	FOR VEP83405A
R28-46	ERJ3GEYJ470	M.RESISTOR CH 1/16W 47	19	
R47	ERJ3GEY0R00	M.RESISTOR CH 1/16W 0	1	
R48-53	ERJ3GEYJ470	M.RESISTOR CH 1/16W 47	6	
R54	ERJ3GEY0R00	M.RESISTOR CH 1/16W 0	1	FOR VEP83405A
R54	ERJ3GEYJ470	M.RESISTOR CH 1/16W 47	1	
R55	ERJ3GEY0R00	M.RESISTOR CH 1/16W 0	1	FOR VEP83405A
R64,65	ERJ3GEY0R00	M.RESISTOR CH 1/16W 0	2	
R67-02	ERJ3GEY0R00	M.RESISTOR CH 1/16W 0	12	FOR VEP83405A
R78	ERJ3GEYG102	M.RESISTOR CH 1/16W 1K	1	
R79,02	ERJ3GEY0R00	M.RESISTOR CH 1/16W 0	2	FOR VEP83405A
R80	ERJ3GEYG102	M.RESISTOR CH 1/16W 1K	1	
R81	ERJ3GEY0R00	M.RESISTOR CH 1/16W 0	1	FOR VEP83405A
R81	ERJ3GEYG102	M.RESISTOR CH 1/16W 1K	1	
R82-02	ERJ3GEY0R00	M.RESISTOR CH 1/16W 0	3	FOR VEP83405A
R84,85	ERJ3GEYG102	M.RESISTOR CH 1/16W 1K	2	
R87	ERJ3GEY0R00	M.RESISTOR CH 1/16W 0	1	
R92-95	ERJ3GEYG102	M.RESISTOR CH 1/16W 1K	4	FOR VEP83405A
R96	ERJ3GEY0R00	M.RESISTOR CH 1/16W 0	1	FOR VEP83405A
R98	ERJ3GEY0R00	M.RESISTOR CH 1/16W 0	1	FOR VEP83405A
R101	ERJ3GEY0R00	M.RESISTOR CH 1/16W 0	1	
R102	ERJ3GEYG102	M.RESISTOR CH 1/16W 1K	1	FOR VEP83405A
R102	ERJ3GEYJ103	M.RESISTOR CH 1/16W 10K	1	
R103	ERJ3GEYG102	M.RESISTOR CH 1/16W 1K	1	FOR VEP83405A
R103	ERJ3GEYJ103	M.RESISTOR CH 1/16W 10K	1	
R104	ERJ3GEY0R00	M.RESISTOR CH 1/16W 0	1	
R105	ERJ3GEYG102	M.RESISTOR CH 1/16W 1K	1	
R106	ERJ3GEYJ101	M.RESISTOR CH 1/16W 100	1	
R106	ERJ3GEYJ103	M.RESISTOR CH 1/16W 10K	1	FOR VEP83405A
R107	ERJ3GEYJ101	M.RESISTOR CH 1/16W 100	1	
R107	ERJ3GEYJ103	M.RESISTOR CH 1/16W 10K	1	FOR VEP83405A
R108	ERJ3GEY0R00	M.RESISTOR CH 1/16W 0	1	FOR VEP83405A
R108	ERJ3GEYJ272	M.RESISTOR CH 1/16W 2.7K	1	
R109	ERJ3GEYJ103	M.RESISTOR CH 1/16W 10K	1	FOR VEP83405A
R109	ERJ3GEYJ272	M.RESISTOR CH 1/16W 2.7K	1	

Ref.No.	Part No.	Part Name & Description	Pcs	Remarks
R110	ERJ3GEYJ103	M.RESISTOR CH 1/16W 10K	1	FOR VEP83405A
R110	ERJ3GEYJ272	M.RESISTOR CH 1/16W 2.7K	1	
R111	ERJ3GEYJ103	M.RESISTOR CH 1/16W 10K	1	FOR VEP83405A
R111-13	ERJ3GEYJ272	M.RESISTOR CH 1/16W 2.7K	3	
R114	ERJ3GEYJ101	M.RESISTOR CH 1/16W 100	1	FOR VEP83405A
R114	ERJ3GEYJ272	M.RESISTOR CH 1/16W 2.7K	1	
R115	ERJ3GEY0R00	M.RESISTOR CH 1/16W 0	1	FOR VEP83405A
R115	ERJ3GEYJ272	M.RESISTOR CH 1/16W 2.7K	1	
R116	ERJ3GEY0R00	M.RESISTOR CH 1/16W 0	1	FOR VEP83405A
R116	ERJ3GEYJ103	M.RESISTOR CH 1/16W 10K	1	
R117	ERJ3GEYG102	M.RESISTOR CH 1/16W 1K	1	FOR VEP83405A
R117	ERJ3GEYJ103	M.RESISTOR CH 1/16W 10K	1	
R118	ERJ3GEYG102	M.RESISTOR CH 1/16W 1K	1	FOR VEP83405A
R118	ERJ3GEYJ103	M.RESISTOR CH 1/16W 10K	1	
R119	ERJ3GEYG102	M.RESISTOR CH 1/16W 1K	1	FOR VEP83405A
R119	ERJ3GEYJ103	M.RESISTOR CH 1/16W 10K	1	
R120,21	ERJ3GEYG102	M.RESISTOR CH 1/16W 1K	2	
R122	ERJ3GEYG102	M.RESISTOR CH 1/16W 1K	1	FOR VEP83405A
R122	ERJ3GEYJ103	M.RESISTOR CH 1/16W 10K	1	
R123	ERJ3GEY0R00	M.RESISTOR CH 1/16W 0	1	
R124	ERJ3GEYJ101	M.RESISTOR CH 1/16W 100	1	
R127	ERJ3GEYJ103	M.RESISTOR CH 1/16W 10K	1	
R128	ERJ3GEYJ103	M.RESISTOR CH 1/16W 10K	1	
R128	ERJ3GEYJ103	M.RESISTOR CH 1/16W 10K	1	FOR VEP83405A
R132-35	ERJ3GEYJ103	M.RESISTOR CH 1/16W 10K	4	
R136	ERJ3GEY0R00	M.RESISTOR CH 1/16W 0	1	
R137-40	ERJ3GEYJ103	M.RESISTOR CH 1/16W 10K	4	
R144	ERJ3GEYJ101	M.RESISTOR CH 1/16W 100	1	
R145	ERJ3GEY0R00	M.RESISTOR CH 1/16W 0	1	
R147	ERJ3GEYJ103	M.RESISTOR CH 1/16W 10K	1	
R149	ERJ3GEY0R00	M.RESISTOR CH 1/16W 0	1	
R151	ERJ3GEY0R00	M.RESISTOR CH 1/16W 0	1	
R152,53	ERJ3GEYJ101	M.RESISTOR CH 1/16W 100	2	
R154-61	ERJ3GEYG472	M.RESISTOR CH 1/16W 4.7K	8	
R170,71	ERJ3GEY0R00	M.RESISTOR CH 1/16W 0	2	
R172	ERJ3GEYJ473	M.RESISTOR CH 1/16W 47K	1	
R173	ERJ3GEYG471	M.RESISTOR CH 1/16W 470	1	
R174	ERJ3GEYJ222	M.RESISTOR CH 1/16W 2.2K	1	
R175	ERJ3GEYG472	M.RESISTOR CH 1/16W 4.7K	1	
R176	ERJ3GEYJ123	M.RESISTOR CH 1/16W 12K	1	
R177,78	ERJ3GEYJ103	M.RESISTOR CH 1/16W 10K	2	
R179	ERJ3GEYG472	M.RESISTOR CH 1/16W 4.7K	1	
R180	ERJ3GEYJ222	M.RESISTOR CH 1/16W 2.2K	1	
R181	ERJ3GEYJ473	M.RESISTOR CH 1/16W 47K	1	
R182	ERJ3GEYJ273	M.RESISTOR CH 1/16W 27K	1	
R183	ERJ3GEYJ105	M.RESISTOR CH 1/16W 1M	1	
R184,85	ERJ3GEYJ103	M.RESISTOR CH 1/16W 10K	2	
R186	ERJ3GEYG102	M.RESISTOR CH 1/16W 1K	1	
R187	ERJ3GEY0R00	M.RESISTOR CH 1/16W 0	1	
R188	ERJ3GEYG102	M.RESISTOR CH 1/16W 1K	1	
R189	ERJ3GEYJ223	M.RESISTOR CH 1/16W 22K	1	
R190	ERJ3GEYJ105	M.RESISTOR CH 1/16W 1M	1	
R191,92	ERJ3GEYG102	M.RESISTOR CH 1/16W 1K	2	
R193	ERJ3GEYG472	M.RESISTOR CH 1/16W 4.7K	1	
R194,95	ERJ3GEY0R00	M.RESISTOR CH 1/16W 0	2	
R196	ERJ3GEYG102	M.RESISTOR CH 1/16W 1K	1	
R197	ERJ3GEYJ103	M.RESISTOR CH 1/16W 10K	1	
R198	ERJ3GEYG102	M.RESISTOR CH 1/16W 1K	1	
R199	ERJ3GEYJ103	M.RESISTOR CH 1/16W 10K	1	
R200	ERJ3GEY0R00	M.RESISTOR CH 1/16W 0	1	FOR VEP83405A
R200	ERJ3GEYJ221	M.RESISTOR CH 1/16W 220	1	
R201	ERJ3GEY0R00	M.RESISTOR CH 1/16W 0	1	FOR VEP83405A
R201,02	ERJ3GEYJ101	M.RESISTOR CH 1/16W 100	2	FOR VEP83405A
R202	ERJ3GEYJ103	M.RESISTOR CH 1/16W 10K	1	
R203	ERJ3GEYJ223	M.RESISTOR CH 1/16W 22K	1	
R204	ERJ3GEYJ105	M.RESISTOR CH 1/16W 1M	1	
R205	ERJ3GEYJ331	M.RESISTOR CH 1/16W 330	1	
R206	ERJ3GEYJ272	M.RESISTOR CH 1/16W 2.7K	1	
R207,08	ERJ3GEYG102	M.RESISTOR CH 1/16W 1K	2	
R209,10	ERJ3GEY0R00	M.RESISTOR CH 1/16W 0	2	
R211,12	ERJ3GEYJ101	M.RESISTOR CH 1/16W 100	2	
R213	ERJ3GEYJ101	M.RESISTOR CH 1/16W 100	1	
R216-22	ERJ3GEYJ470	M.RESISTOR CH 1/16W 47	7	
R223	ERJ3GEY0R00	M.RESISTOR CH 1/16W 0	1	
R228-35	ERJ3GEYJ470	M.RESISTOR CH 1/16W 47	8	

Ref.No.	Part No.	Part Name & Description	Pcs	Remarks
R236-39	ERJ3GEYJ101	M.RESISTOR CH 1/16W 100	4	
R240	ERJ3GEY0R00	M.RESISTOR CH 1/16W 0	1	
R241	ERJ3GEYG471	M.RESISTOR CH 1/16W 470	1	
R242	ERJ3GEY0R00	M.RESISTOR CH 1/16W 0	1	
R243	ERJ3GEYG471	M.RESISTOR CH 1/16W 470	1	
R244	ERJ3GEY0R00	M.RESISTOR CH 1/16W 0	1	
R245	ERJ3GEYJ221	M.RESISTOR CH 1/16W 220	1	
R246	ERJ3GEY0R00	M.RESISTOR CH 1/16W 0	1	
R247	ERJ3GEYJ221	M.RESISTOR CH 1/16W 220	1	
R248	ERJ3GEY0R00	M.RESISTOR CH 1/16W 0	1	
R249	ERJ3GEYG471	M.RESISTOR CH 1/16W 470	1	
R250	ERJ3GEY0R00	M.RESISTOR CH 1/16W 0	1	
R251	ERJ3GEYG471	M.RESISTOR CH 1/16W 470	1	
R252	ERJ3GEY0R00	M.RESISTOR CH 1/16W 0	1	
R253	ERJ3GEYG471	M.RESISTOR CH 1/16W 470	1	
R254	ERJ3GEY0R00	M.RESISTOR CH 1/16W 0	1	
R255	ERJ3GEYG471	M.RESISTOR CH 1/16W 470	1	
R256-58	ERJ3GEYJ470	M.RESISTOR CH 1/16W 47	3	
R260,61	ERJ3GEYJ470	M.RESISTOR CH 1/16W 47	2	
R264-67	ERJ3GEYJ470	M.RESISTOR CH 1/16W 47	4	
R272-87	ERJ3GEYJ470	M.RESISTOR CH 1/16W 47	16	
R288	ERJ3GEY0R00	M.RESISTOR CH 1/16W 0	1	
R290	ERJ3GEYJ103	M.RESISTOR CH 1/16W 10K	1	
R291	ERJ3GEY0R00	M.RESISTOR CH 1/16W 0	1	
R293	ERJ3GEYJ103	M.RESISTOR CH 1/16W 10K	1	
R300-15	ERJ3GEYJ103	M.RESISTOR CH 1/16W 10K	16	
R316,17	ERJ3GEYJ101	M.RESISTOR CH 1/16W 100	2	
R318,19	ERJ3GEY0R00	M.RESISTOR CH 1/16W 0	2	
R320	ERJ3GEYJ101	M.RESISTOR CH 1/16W 100	1	
R330,31	ERJ3GEYJ101	M.RESISTOR CH 1/16W 100	2	
R333-36	ERJ3GEYJ103	M.RESISTOR CH 1/16W 10K	4	
R337,38	ERJ3GEYJ470	M.RESISTOR CH 1/16W 47	2	
R340,41	ERJ3GEYJ101	M.RESISTOR CH 1/16W 100	2	
R342	ERJ3GEY0R00	M.RESISTOR CH 1/16W 0	1	
R344-48	ERJ3GEYJ470	M.RESISTOR CH 1/16W 47	5	
R351	ERJ3GEYJ103	M.RESISTOR CH 1/16W 10K	1	
R353-61	ERJ3GEYG472	M.RESISTOR CH 1/16W 4.7K	9	
R362-65	ERJ3GEYJ103	M.RESISTOR CH 1/16W 10K	4	
R366-74	ERJ3GEYJ273	M.RESISTOR CH 1/16W 27K	9	
R380	ERJ3GEYJ223	M.RESISTOR CH 1/16W 22K	1	
R400	ERJ3GEYJ103	M.RESISTOR CH 1/16W 10K	1	
R401	ERJ3GEY0R00	M.RESISTOR CH 1/16W 0	1	
R402	ERJ3GEYG471	M.RESISTOR CH 1/16W 470	1	
R403	ERJ3GEY0R00	M.RESISTOR CH 1/16W 0	1	
R404	ERJ3GEYG471	M.RESISTOR CH 1/16W 470	1	
R407	ERJ3GEY0R00	M.RESISTOR CH 1/16W 0	1	
R408	ERJ3GEYG471	M.RESISTOR CH 1/16W 470	1	
R409	ERJ3GEY0R00	M.RESISTOR CH 1/16W 0	1	
R410	ERJ3GEYG471	M.RESISTOR CH 1/16W 470	1	
R420	ERJ3GEYJ103	M.RESISTOR CH 1/16W 10K	1	
R421	ERJ3GEYJ470	M.RESISTOR CH 1/16W 47	1	
R422	ERJ3GEYJ105	M.RESISTOR CH 1/16W 1M	1	
R440,41	ERJ3GEY0R00	M.RESISTOR CH 1/16W 0	2	
R442	ERJ3GEYG102	M.RESISTOR CH 1/16W 1K	1	
R443	ERJ3GEYJ223	M.RESISTOR CH 1/16W 22K	1	
R444-53	ERJ3GEYJ273	M.RESISTOR CH 1/16W 27K	10	
R462	ERJ3GEY0R00	M.RESISTOR CH 1/16W 0	1	
R464-66	ERJ3GEYJ103	M.RESISTOR CH 1/16W 10K	3	
R469	ERJ3GEYJ391	M.RESISTOR CH 1/16W 390	1	
R470	ERJ3GEYJ681	M.RESISTOR CH 1/16W 680	1	
R471	ERJ3GEYJ391	M.RESISTOR CH 1/16W 390	1	
R472	ERJ3GEY0R00	M.RESISTOR CH 1/16W 0	1	
R473	ERJ3GEYJ681	M.RESISTOR CH 1/16W 680	1	
R476	ERJ3GEYJ103	M.RESISTOR CH 1/16W 10K	1	
R477	ERJ3GEYJ393	M.RESISTOR CH 1/16W 39K	1	
R478	ERJ3GEYJ222	M.RESISTOR CH 1/16W 2.2K	1	
R480	ERJ3GEYJ101	M.RESISTOR CH 1/16W 100	1	
R481	ERJ3GEYJ103	M.RESISTOR CH 1/16W 10K	1	
R483	ERJ3GEYJ681	M.RESISTOR CH 1/16W 680	1	
R484	ERJ3GEYJ391	M.RESISTOR CH 1/16W 390	1	
R487	ERJ3GEYJ470	M.RESISTOR CH 1/16W 47	1	
R488	ERJ3GEYJ101	M.RESISTOR CH 1/16W 100	1	
R489-94	ERJ3GEYG472	M.RESISTOR CH 1/16W 4.7K	6	
R497	ERJ3GEYG102	M.RESISTOR CH 1/16W 1K	1	
R510	ERJ3GEYJ101	M.RESISTOR CH 1/16W 100	1	

Ref.No.	Part No.	Part Name & Description	Pcs	Remarks
R540,41	ERJ3GEY0R00	M.RESISTOR CH 1/16W 0	2	
R543	ERJ3GEYJ101	M.RESISTOR CH 1/16W 100	1	
R544	ERJ3GEY0R00	M.RESISTOR CH 1/16W 0	1	
R555	ERJ3GEYJ101	M.RESISTOR CH 1/16W 100	1	
R557	ERJ3GEY0R00	M.RESISTOR CH 1/16W 0	1	
R654	ERJ3GEY0R00	M.RESISTOR CH 1/16W 0	1	
R670-72	ERJ3GEYJ103	M.RESISTOR CH 1/16W 10K	3	
R673,74	ERJ3GEY0R00	M.RESISTOR CH 1/16W 0	2	
R675	ERJ3GEYJ101	M.RESISTOR CH 1/16W 100	1	
R676-91	ERJ3GEY0R00	M.RESISTOR CH 1/16W 0	16	
R713	ERJ3GEYG102	M.RESISTOR CH 1/16W 1K	1	
R715	ERJ3GEY0R00	M.RESISTOR CH 1/16W 0	1	
R760	ERJ3GEYJ101	M.RESISTOR CH 1/16W 100	1	
R765	ERJ3GEYJ101	M.RESISTOR CH 1/16W 100	1	
R766	ERJ3GEY0R00	M.RESISTOR CH 1/16W 0	1	
R781,82	ERJ3GEYJ103	M.RESISTOR CH 1/16W 10K	2	
R784	ERJ3GEYJ101	M.RESISTOR CH 1/16W 100	1	
R800-03	ERJ3GEYJ101	M.RESISTOR CH 1/16W 100	4	
R804	ERJ3GEY0R00	M.RESISTOR CH 1/16W 0	1	
R806-08	ERJ3GEYJ101	M.RESISTOR CH 1/16W 100	3	
R811,12	ERJ3GEY0R00	M.RESISTOR CH 1/16W 0	2	
R815	ERJ3GEY0R00	M.RESISTOR CH 1/16W 0	1	
R819	ERJ3GEY0R00	M.RESISTOR CH 1/16W 0	1	
R821	ERJ3GEY0R00	M.RESISTOR CH 1/16W 0	1	
R826	ERJ3GEY0R00	M.RESISTOR CH 1/16W 0	1	
R827	ERJ3GEYG102	M.RESISTOR CH 1/16W 1K	1	
R828	ERJ3GEYJ103	M.RESISTOR CH 1/16W 10K	1	
R840-48	ERJ3GEYJ470	M.RESISTOR CH 1/16W 47	9	
R849-54	ERJ3GEYJ103	M.RESISTOR CH 1/16W 10K	6	
R855	ERJ3GEYG102	M.RESISTOR CH 1/16W 1K	1	
R856-59	ERJ3GEYJ103	M.RESISTOR CH 1/16W 10K	4	
R860-64	ERJ3GEYJ470	M.RESISTOR CH 1/16W 47	5	
R870	ERJ3GEYJ473	M.RESISTOR CH 1/16W 47K	1	
R871	ERJ3GEYG102	M.RESISTOR CH 1/16W 1K	1	
R873,74	ERJ3GEY0R00	M.RESISTOR CH 1/16W 0	2	
R876,77	ERJ3GEYJ222	M.RESISTOR CH 1/16W 2.2K	2	
R878,79	ERJ3GEYJ101	M.RESISTOR CH 1/16W 100	2	
R880	ERJ3GEYG102	M.RESISTOR CH 1/16W 1K	1	
R882	ERJ3GEYG102	M.RESISTOR CH 1/16W 1K	1	
R883	ERJ3GEYJ103	M.RESISTOR CH 1/16W 10K	1	
R886	ERJ3GEYJ103	M.RESISTOR CH 1/16W 10K	1	
R887,88	ERJ3GEYG472	M.RESISTOR CH 1/16W 4.7K	2	
R889-96	ERJ3GEYG102	M.RESISTOR CH 1/16W 1K	8	
R897	ERJ3GEYJ104	M.RESISTOR CH 1/16W 100K	1	
R898	ERJ3GEY0R00	M.RESISTOR CH 1/16W 0	1	
R899	ERJ3GEYJ104	M.RESISTOR CH 1/16W 100K	1	
R900	ERJ3GEY0R00	M.RESISTOR CH 1/16W 0	1	
R901	ERJ3GEYJ104	M.RESISTOR CH 1/16W 100K	1	
R910	ERJ3GEYJ473	M.RESISTOR CH 1/16W 47K	1	
R911	ERJ3GEYG102	M.RESISTOR CH 1/16W 1K	1	
R912	ERJ3GEYJ473	M.RESISTOR CH 1/16W 47K	1	
R913	ERJ3GEYJ103	M.RESISTOR CH 1/16W 10K	1	
R915,16	ERJ3GEY0R00	M.RESISTOR CH 1/16W 0	2	
R918	ERJ3GEY0R00	M.RESISTOR CH 1/16W 0	1	
R919	ERJ3GEYJ105	M.RESISTOR CH 1/16W 1M	1	
R920	ERJ3GEYJ271	M.RESISTOR CH 1/16W 270	1	
R921	ERJ3GEYJ473	M.RESISTOR CH 1/16W 47K	1	
R922	ERJ3GEYJ103	M.RESISTOR CH 1/16W 10K	1	
R923,24	ERJ3GEYG102	M.RESISTOR CH 1/16W 1K	2	
R926,27	ERJ3GEY0R00	M.RESISTOR CH 1/16W 0	2	
R928	ERJ3GEYJ222	M.RESISTOR CH 1/16W 2.2K	1	
R930	ERJ3GEYJ222	M.RESISTOR CH 1/16W 2.2K	1	
R934,35	ERJ3GEYJ101	M.RESISTOR CH 1/16W 100	2	
R937	ERJ3GEY0R00	M.RESISTOR CH 1/16W 0	1	
R938-40	ERJ3GEYG102	M.RESISTOR CH 1/16W 1K	3	
R941,42	ERJ3GEYG472	M.RESISTOR CH 1/16W 4.7K	2	
R943,44	ERJ3GEY0R00	M.RESISTOR CH 1/16W 0	2	
R945	ERJ3GEYJ103	M.RESISTOR CH 1/16W 10K	1	
R946	ERJ3GEYG472	M.RESISTOR CH 1/16W 4.7K	1	
R947	ERJ3GEYG102	M.RESISTOR CH 1/16W 1K	1	
R948	ERJ3GEYJ103	M.RESISTOR CH 1/16W 10K	1	
R949,50	ERJ3GEY0R00	M.RESISTOR CH 1/16W 0	2	
R951-53	ERJ3GEYG102	M.RESISTOR CH 1/16W 1K	3	
R954	ERJ3GEY0R00	M.RESISTOR CH 1/16W 0	1	
R955,56	ERJ3GEYG102	M.RESISTOR CH 1/16W 1K	2	

Ref.No.	Part No.	Part Name & Description	Pcs	Remarks
R957	ERJ3GEYJ101	M.RESISTOR CH 1/16W 100	1	
R958	ERJ3GEYG102	M.RESISTOR CH 1/16W 1K	1	
R959	ERJ3GEYJ101	M.RESISTOR CH 1/16W 100	1	
R960	ERJ3GEYJ473	M.RESISTOR CH 1/16W 47K	1	
R961	ERJ3GEY0R00	M.RESISTOR CH 1/16W 0	1	
R962	ERJ3GEYJ104	M.RESISTOR CH 1/16W 100K	1	
R963	ERJ3GEY0R00	M.RESISTOR CH 1/16W 0	1	
R964	ERJ3GEYJ104	M.RESISTOR CH 1/16W 100K	1	
R965	ERJ3GEY0R00	M.RESISTOR CH 1/16W 0	1	
R966	ERJ3GEYJ104	M.RESISTOR CH 1/16W 100K	1	
R967	ERJ3GEY0R00	M.RESISTOR CH 1/16W 0	1	
R980-87	ERJ3GEYJ103	M.RESISTOR CH 1/16W 10K	8	
R988-93	ERJ3GEYJ101	M.RESISTOR CH 1/16W 100	6	
R994-07	ERJ3GEYG472	M.RESISTOR CH 1/16W 4.7K	14	
R1009	ERJ3GEYG472	M.RESISTOR CH 1/16W 4.7K	1	
R1020,21	ERJ3GEY0R00	M.RESISTOR CH 1/16W 0	2	
R1023-27	ERJ3GEY0R00	M.RESISTOR CH 1/16W 0	5	
R1029-36	ERJ3GEY0R00	M.RESISTOR CH 1/16W 0	8	
R1040	ERJ3GEYJ101	M.RESISTOR CH 1/16W 100	1	
R1041-48	ERJ3GEY0R00	M.RESISTOR CH 1/16W 0	8	
R1050	ERJ3GEYJ331	M.RESISTOR CH 1/16W 330	1	
R1051	ERJ3GEYJ103	M.RESISTOR CH 1/16W 10K	1	
R1060	ERJ3GEYJ103	M.RESISTOR CH 1/16W 10K	1	
R1111	ERJ3GEYJ103	M.RESISTOR CH 1/16W 10K	1	
R1112	ERJ3GEYG102	M.RESISTOR CH 1/16W 1K	1	
R1115	ERJ3GEY0R00	M.RESISTOR CH 1/16W 0	1	
R1150	ERJ3GEY0R00	M.RESISTOR CH 1/16W 0	1	
SW100	VSS0342	SWITCH	1	
SW330	VSS0367-02B	SWITCH	1	
SW331	VSS0367-08B	SWITCH	1	
TG1-G3	EYF6CU	TEST POINT	3	
TG13-15	EYF6CU	TEST POINT	3	FOR VEP83405A
TG171	VJR0646	TEST POINT	1	
TG462	VJR0646	TEST POINT	1	
TG910	EYF6CU	TEST POINT	1	
TP1-12	EYF6CU	TEST POINT	12	FOR VEP83405A
TP20-22	EYF6CU	TEST POINT	3	FOR VEP83405A
TP50,51	EYF6CU	TEST POINT	2	FOR VEP83405A
TP130,31	EYF6CU	TEST POINT	2	
TP170	VJR0646	TEST POINT	1	
TP300,01	EYF6CU	TEST POINT	2	
TP303,04	EYF6CU	TEST POINT	2	
TP400	EYF6CU	TEST POINT	1	
TP421	EYF6CU	TEST POINT	1	
TP440,41	EYF6CU	TEST POINT	2	
TP460	VJR0646	TEST POINT	1	
TP510	EYF6CU	TEST POINT	1	
TP870,71	EYF6CU	TEST POINT	2	
TP911,12	EYF6CU	TEST POINT	2	
VC170	ECV1ZW50X53T	TRIMMER	1	
VR460-62	EVMEGSA00B24	V.RESISTOR 20K	3	
X20	VSX0975	CRYSTAL OSCILLATOR	1	FOR VEP83405A
X420	VSX0645	CRYSTAL OSCILLATOR	1	
X910	VSX0637	CRYSTAL OSCILLATOR	1	
		MISCELLANEOUS		
	VML2143	CARD PULLER	1	
	VML2144	CARD PULLER	1	
	VMX2020	P.C.BOARD POST	4	FOR VEP83405A
	XYN3+K6	SCREW	8	FOR VEP83405A

Ref.No.	Part No.	Part Name & Description	Pcs	Remarks

Ref.No.	Part No.	Part Name & Description	Pcs	Remarks
■ E5	VEP83394B	F5 REC PB P.C.BOARD	1	(RTL)FOR AJ-D850E
■	VEP83405B	V BLK SUB P.C.BOARD	1	(RTL)FOR VEP83394B
C1	ECUX1E104ZFV	C.CAPACITOR CH 25V 0.1U	1	FOR VEP83405B
C1	ECUX1H101JCV	C.CAPACITOR CH 50V 100P	1	
C2	ECUX1E104ZFV	C.CAPACITOR CH 25V 0.1U	1	FOR VEP83405B
C2	ECUX1H101JCV	C.CAPACITOR CH 50V 100P	1	
C3	ECUX1E104ZFV	C.CAPACITOR CH 25V 0.1U	1	FOR VEP83405B
C3	ECUX1H101JCV	C.CAPACITOR CH 50V 100P	1	
C4,C5	ECUX1E104ZFV	C.CAPACITOR CH 25V 0.1U	2	FOR VEP83405B
C6	ECUX1H330JCV	C.CAPACITOR CH 50V 33P	1	FOR VEP83405B
C20-22	ECUX1E104ZFV	C.CAPACITOR CH 25V 0.1U	3	FOR VEP83405B
C23-25	ECEV1CV100Q	E.CAPACITOR CH 16V 10U	3	FOR VEP83405B
C26-28	ECUX1E104ZFV	C.CAPACITOR CH 25V 0.1U	3	FOR VEP83405B
C29,30	ECUX1H102JCV	C.CAPACITOR CH 50V 1000P	2	FOR VEP83405B
C31-33	ECUX1E104ZFV	C.CAPACITOR CH 25V 0.1U	3	FOR VEP83405B
C34	ECEV1EN3R3Q	E.CAPACITOR CH 25V 3.3U	1	FOR VEP83405BFOR VEP83405
C35	ECUX1E104ZFV	C.CAPACITOR CH 25V 0.1U	1	FOR VEP83405B
C36	ECUX1H102JCV	C.CAPACITOR CH 50V 1000P	1	FOR VEP83405B
C37-39	ECUX1E104ZFV	C.CAPACITOR CH 25V 0.1U	3	FOR VEP83405B
C50	ECUX1E104ZFV	C.CAPACITOR CH 25V 0.1U	1	
C51	ECUX1E104ZFV	C.CAPACITOR CH 25V 0.1U	1	FOR VEP83405B
C51	ECUX1E104ZFV	C.CAPACITOR CH 25V 0.1U	1	
C52	ECEV0JV330Q	E.CAPACITOR CH6.3V 33U	1	
C61	ECUX1E104ZFV	C.CAPACITOR CH 25V 0.1U	1	
C62	ECUX1E104ZFV	C.CAPACITOR CH 25V 0.1U	1	
C63	ECUX1E104ZFV	C.CAPACITOR CH 25V 0.1U	1	
C64	ECUX1E104ZFV	C.CAPACITOR CH 25V 0.1U	1	
C66	ECUX1E104ZFV	C.CAPACITOR CH 25V 0.1U	1	
C67	ECUX1E104ZFV	C.CAPACITOR CH 25V 0.1U	1	
C68	ECUX1E104ZFV	C.CAPACITOR CH 25V 0.1U	1	
C68	ECUX1E104ZFV	C.CAPACITOR CH 25V 0.1U	1	FOR VEP83405B
C69-71	ECEV1CV100Q	E.CAPACITOR CH 16V 10U	3	
C72-87	ECUX1E104ZFV	C.CAPACITOR CH 25V 0.1U	16	
C88-95	ECEV0JV330Q	E.CAPACITOR CH6.3V 33U	8	
C96-00	ECUX1E104ZFV	C.CAPACITOR CH 25V 0.1U	5	
C101	ECUX1E104ZFV	C.CAPACITOR CH 25V 0.1U	1	
C103	ECUX1E104ZFV	C.CAPACITOR CH 25V 0.1U	1	
C104	ECUX1E104ZFV	C.CAPACITOR CH 25V 0.1U	1	
C105	ECUX1E104ZFV	C.CAPACITOR CH 25V 0.1U	1	
C107	ECUX1E104ZFV	C.CAPACITOR CH 25V 0.1U	1	
C108	ECUX1E104ZFV	C.CAPACITOR CH 25V 0.1U	1	
C109	ECUX1E104ZFV	C.CAPACITOR CH 25V 0.1U	1	
C110	ECUX1E104ZFV	C.CAPACITOR CH 25V 0.1U	1	
C111	ECUX1E104ZFV	C.CAPACITOR CH 25V 0.1U	1	
C112	ECUX1E104ZFV	C.CAPACITOR CH 25V 0.1U	1	
C113	ECUX1E104ZFV	C.CAPACITOR CH 25V 0.1U	1	FOR VEP83405B
C113	ECUX1H103KBV	C.CAPACITOR CH 50V 0.01U	1	
C114	ECUX1E104ZFV	C.CAPACITOR CH 25V 0.1U	1	
C115	ECUX1E104ZFV	C.CAPACITOR CH 25V 0.1U	1	
C120	ECUX1E104ZFV	C.CAPACITOR CH 25V 0.1U	1	FOR VEP83405B
C130-36	ECUX1E104ZFV	C.CAPACITOR CH 25V 0.1U	7	
C170-76	ECUX1E104ZFV	C.CAPACITOR CH 25V 0.1U	7	
C178	ECUX1H103KBV	C.CAPACITOR CH 50V 0.01U	1	
C179-81	ECUX1E104ZFV	C.CAPACITOR CH 25V 0.1U	3	
C182	ECUX1H103KBV	C.CAPACITOR CH 50V 0.01U	1	
C183	ECUX1E104ZFV	C.CAPACITOR CH 25V 0.1U	1	
C184	ECUX1H331JCV	C.CAPACITOR CH 50V 330P	1	
C185	ECEV1CV100Q	E.CAPACITOR CH 16V 10U	1	
C186,87	ECUX1E104ZFV	C.CAPACITOR CH 25V 0.1U	2	
C188	ECEV1CV100Q	E.CAPACITOR CH 16V 10U	1	
C189-92	ECUX1E104ZFV	C.CAPACITOR CH 25V 0.1U	4	
C193	ECUX1H222KBV	C.CAPACITOR CH 50V 2200P	1	
C194	ECEV1EN3R3Q	E.CAPACITOR CH 25V 3.3U	1	
C195	ECUX1H101JCV	C.CAPACITOR CH 50V 100P	1	
C196	ECUX1H470JCV	C.CAPACITOR CH 50V 47P	1	
C197	ECUX1E104ZFV	C.CAPACITOR CH 25V 0.1U	1	
C198	ECEV1EN3R3Q	E.CAPACITOR CH 25V 3.3U	1	
C199	ECEV1CV100Q	E.CAPACITOR CH 16V 10U	1	
C200	ECUX1H102JCV	C.CAPACITOR CH 50V 1000P	1	
C201	ECEV1CV100Q	E.CAPACITOR CH 16V 10U	1	
C202	ECUX1E104ZFV	C.CAPACITOR CH 25V 0.1U	1	
C203	ECUX1H050CCV	C.CAPACITOR CH 50V 5P	1	

Ref.No.	Part No.	Part Name & Description	Pcs	Remarks
C204	ECUX1E104ZFV	C.CAPACITOR CH 25V 0.1U	1	
C205	ECUX1H151JCV	C.CAPACITOR CH 50V 150P	1	
C206	ECUX1H102JCV	C.CAPACITOR CH 50V 1000P	1	
C207	ECUX1H470JCV	C.CAPACITOR CH 50V 47P	1	
C209	ECUX1H050CCV	C.CAPACITOR CH 50V 5P	1	
C210	ECUX1E104ZFV	C.CAPACITOR CH 25V 0.1U	1	
C211	ECUX1H101JCV	C.CAPACITOR CH 50V 100P	1	
C212	VCK0150	C.CAPACITOR	1	
C213,14	ECUX1H101JCV	C.CAPACITOR CH 50V 100P	2	
C215,16	ECUX1E104ZFV	C.CAPACITOR CH 25V 0.1U	2	
C219,20	ECUX1E104ZFV	C.CAPACITOR CH 25V 0.1U	2	
C300-05	ECUX1E104ZFV	C.CAPACITOR CH 25V 0.1U	6	
C306	ECUX1H102JCV	C.CAPACITOR CH 50V 1000P	1	
C307-15	ECUX1E104ZFV	C.CAPACITOR CH 25V 0.1U	9	
C330,31	ECUX1E104ZFV	C.CAPACITOR CH 25V 0.1U	2	
C333-35	ECUX1E104ZFV	C.CAPACITOR CH 25V 0.1U	3	
C336	ECUX1H102JCV	C.CAPACITOR CH 50V 1000P	1	
C337-56	ECUX1E104ZFV	C.CAPACITOR CH 25V 0.1U	20	
C380	ECUX1E104ZFV	C.CAPACITOR CH 25V 0.1U	1	
C381	ECUX1H102JCV	C.CAPACITOR CH 50V 1000P	1	
C382-88	ECUX1E104ZFV	C.CAPACITOR CH 25V 0.1U	7	
C400-03	ECUX1E104ZFV	C.CAPACITOR CH 25V 0.1U	4	
C404	ECUX1H102JCV	C.CAPACITOR CH 50V 1000P	1	
C405	ECUX1H103KBV	C.CAPACITOR CH 50V 0.01U	1	
C406-10	ECUX1E104ZFV	C.CAPACITOR CH 25V 0.1U	5	
C420	ECUX1H102JCV	C.CAPACITOR CH 50V 1000P	1	
C421	ECUX1H103KBV	C.CAPACITOR CH 50V 0.01U	1	
C422	ECUX1E104ZFV	C.CAPACITOR CH 25V 0.1U	1	
C423	ECUX1H100DCV	C.CAPACITOR CH 50V 10P	1	
C424	ECUX1E104ZFV	C.CAPACITOR CH 25V 0.1U	1	
C425	ECUX1H102JCV	C.CAPACITOR CH 50V 1000P	1	
C426	ECUX1E104ZFV	C.CAPACITOR CH 25V 0.1U	1	
C427	ECUX1H180JCV	C.CAPACITOR CH 50V 18P	1	
C428	ECUX1E104ZFV	C.CAPACITOR CH 25V 0.1U	1	
C440	ECUX1E104ZFV	C.CAPACITOR CH 25V 0.1U	1	
C441	ECUX1H102JCV	C.CAPACITOR CH 50V 1000P	1	
C442	ECUX1E104ZFV	C.CAPACITOR CH 25V 0.1U	1	
C443	ECUX1H102JCV	C.CAPACITOR CH 50V 1000P	1	
C444-50	ECUX1E104ZFV	C.CAPACITOR CH 25V 0.1U	7	
C460-65	ECUX1E104ZFV	C.CAPACITOR CH 25V 0.1U	6	
C467-70	ECUX1E104ZFV	C.CAPACITOR CH 25V 0.1U	4	
C471	ECEV0JV330Q	E.CAPACITOR CH6.3V 33U	1	
C472	ECUX1E104ZFV	C.CAPACITOR CH 25V 0.1U	1	
C473	ECUX1H180JCV	C.CAPACITOR CH 50V 18P	1	
C474	ECUX1H682KBV	C.CAPACITOR CH 50V 6800P	1	
C475	ECEV0JV330Q	E.CAPACITOR CH6.3V 33U	1	
C476	ECUX1E104ZFV	C.CAPACITOR CH 25V 0.1U	1	
C477	ECUX1H102JCV	C.CAPACITOR CH 50V 1000P	1	
C478	ECUX1H682KBV	C.CAPACITOR CH 50V 6800P	1	
C479	ECUX1H180JCV	C.CAPACITOR CH 50V 18P	1	
C481	ECEV1CV100Q	E.CAPACITOR CH 16V 10U	1	
C482	ECEV1HV2R2Q	E.CAPACITOR CH 50V 2.2U	1	
C483	ECUX1E104ZFV	C.CAPACITOR CH 25V 0.1U	1	
C484	VCK0151	C.CAPACITOR	1	
C485	ECEV1CV100Q	E.CAPACITOR CH 16V 10U	1	
C486	ECEV1HV2R2Q	E.CAPACITOR CH 50V 2.2U	1	
C487	ECUX1E104ZFV	C.CAPACITOR CH 25V 0.1U	1	
C488	ECEV0JV330Q	E.CAPACITOR CH6.3V 33U	1	
C489,90	ECUX1E104ZFV	C.CAPACITOR CH 25V 0.1U	2	
C491	ECUX1H682KBV	C.CAPACITOR CH 50V 6800P	1	
C492	ECUX1H180JCV	C.CAPACITOR CH 50V 18P	1	
C493-00	ECUX1E104ZFV	C.CAPACITOR CH 25V 0.1U	8	
C510-18	ECUX1E104ZFV	C.CAPACITOR CH 25V 0.1U	9	
C519	ECUX1H102JCV	C.CAPACITOR CH 50V 1000P	1	
C520-23	ECUX1E104ZFV	C.CAPACITOR CH 25V 0.1U	4	
C542-44	ECUX1E104ZFV	C.CAPACITOR CH 25V 0.1U	3	
C549,50	ECUX1E104ZFV	C.CAPACITOR CH 25V 0.1U	2	
C640,41	ECUX1E104ZFV	C.CAPACITOR CH 25V 0.1U	2	
C642	ECUX1H330JCV	C.CAPACITOR CH 50V 33P	1	
C643	ECUX1H150JCV	C.CAPACITOR CH 50V 15P	1	
C644-57	ECUX1E104ZFV	C.CAPACITOR CH 25V 0.1U	14	
C670-74	ECUX1E104ZFV	C.CAPACITOR CH 25V 0.1U	5	
C760-71	ECUX1E104ZFV	C.CAPACITOR CH 25V 0.1U	12	
C780-82	ECUX1E104ZFV	C.CAPACITOR CH 25V 0.1U	3	
C784	ECUX1E104ZFV	C.CAPACITOR CH 25V 0.1U	1	

Ref.No.	Part No.	Part Name & Description	Pcs	Remarks
C800-11	ECUX1E104ZFV	C.CAPACITOR CH 25V 0.1U	12	
C840	ECUX1H102JCV	C.CAPACITOR CH 50V 1000P	1	
C841-44	ECUX1E104ZFV	C.CAPACITOR CH 25V 0.1U	4	
C870	ECUX1H103KBV	C.CAPACITOR CH 50V 0.01U	1	
C871,72	ECUX1E104ZFV	C.CAPACITOR CH 25V 0.1U	2	
C910,11	ECUX1E104ZFV	C.CAPACITOR CH 25V 0.1U	2	
C912	ECUX1H150JCV	C.CAPACITOR CH 50V 15P	1	
C913	ECUX1H120JCV	C.CAPACITOR CH 50V 12P	1	
C914	ECUX1H103KBV	C.CAPACITOR CH 50V 0.01U	1	
C915	ECUX1E104ZFV	C.CAPACITOR CH 25V 0.1U	1	
C916-18	ECUX1H102JCV	C.CAPACITOR CH 50V 1000P	3	
C980-86	ECUX1E104ZFV	C.CAPACITOR CH 25V 0.1U	7	
C987	ECUX1H102JCV	C.CAPACITOR CH 50V 1000P	1	
C1020-23	ECUX1E104ZFV	C.CAPACITOR CH 25V 0.1U	4	
C1026-29	ECUX1E104ZFV	C.CAPACITOR CH 25V 0.1U	4	
C1050-54	ECUX1E104ZFV	C.CAPACITOR CH 25V 0.1U	5	
C1060-65	ECUX1E104ZFV	C.CAPACITOR CH 25V 0.1U	6	
C1110-12	ECUX1E104ZFV	C.CAPACITOR CH 25V 0.1U	3	
D20,21	MA152WK	DIODE	2	FOR VEP83405B
D60-63	MA701A	DIODE	4	
D170	MA715	DIODE	1	
D171	MA335	DIODE	1	
D172,73	MA152WK	DIODE	2	
FL60-63	VLF0576T	FILTER	4	
FL460	VLF1118	FILTER	1	
FL461	VLF1116	FILTER	1	
FL462	VLF1117	FILTER	1	
IC20	NJM78L09UA	IC	1	FOR VEP83405B
IC21	NJM78L05UA	IC	1	FOR VEP83405B
IC22	NJM79L09UA	IC	1	FOR VEP83405B
IC23	MM74HC221AM	IC	1	FOR VEP83405B
IC24	MC74HC125AF	IC	1	FOR VEP83405B
IC25	NJM082BM	IC	1	FOR VEP83405B
IC50	T74VHCT244F	IC	1	
IC51	T203E3801AF1	IC	1	FOR VEP83405B
IC52,53	T74VHC244F	IC	2	FOR VEP83405B
IC54,55	TC7S04F	IC	2	FOR VEP83405B
IC56	T74VHC244F	IC	1	FOR VEP83405B
IC61	NJM78L09UA	IC	1	
IC62	NJM79L09UA	IC	1	
IC63	NJM78L05UA	IC	1	
IC65-67	XC62AP3202PL	IC	3	
IC68	XC62AP2302P	IC	1	
IC69-71	XC62AP3202PL	IC	3	
IC72	XC62AP2302P	IC	1	
IC73,74	XC62AP3202PL	IC	2	
IC75	74F244SJ	IC	1	
IC101	EPF10K20TC-4	IC	1	FOR VEP83405B
IC101	SN74S1051NS	IC	1	
IC102	CY7C19920ZC	IC	1	FOR VEP83405B
IC102	SN74S1051NS	IC	1	
IC103	74F541SJ	IC	1	
IC103	S80726ANDP	IC	1	FOR VEP83405B
IC104	74F541SJ	IC	1	
IC104	VSI3028B	IC	1	FOR VEP83405B
IC105	CY7C19920ZC	IC	1	FOR VEP83405B
IC105	TC7S04F	IC	1	
IC106	74F245SJ	IC	1	
IC107	74F138SJ	IC	1	
IC108,09	UPD71055GB	IC	2	
IC110	T74VHC244F	IC	1	
IC111	UPD71055GB	IC	1	
IC112	TC7S08F	IC	1	
IC114	74AC139SJ	IC	1	
IC115	74F244SJ	IC	1	
IC116	TC7S04F	IC	1	
IC130	TCVHC153F	IC	1	
IC131	UPD65841G025	IC	1	
IC132,33	T74VHCT244F	IC	2	
IC170	NJM082BM	IC	1	
IC171	NJM319M	IC	1	
IC172	MC74HC125AF	IC	1	

Ref.No.	Part No.	Part Name & Description	Pcs	Remarks
IC173	TC7S66F	IC	1	
IC174,75	NJM082BM	IC	2	
IC176	TC7S04F	IC	1	
IC177	UPC2384GA	IC	1	
IC178	74F244SJ	IC	1	
IC181	74F244SJ	IC	1	
IC184	T74LCX244F	IC	1	
IC185	MC10H124M	IC	1	
IC186-88	T74LCX244F	IC	3	
IC189	XC62AP3202PL	IC	1	
IC190	TC7S08F	IC	1	
IC300,01	T74VHC244F	IC	2	
IC302	MN67372A2	IC	1	
IC303	MN4707F	IC	1	
IC304	T74VHC244F	IC	1	
IC330	T74VHC244F	IC	1	
IC331	MC10H125M	IC	1	
IC332	T74LCX244F	IC	1	
IC334	M65401FP	IC	1	
IC335	MN673711	IC	1	
IC336-39	T74VHC245F	IC	4	
IC380	L7A1433	IC	1	
IC381	TC7S66F	IC	1	
IC382	MB81V4260S7	IC	1	
IC400	L7A1434	IC	1	
IC401	MC10H124M	IC	1	
IC402,03	TC7S08F	IC	2	
IC420	L7A1434	IC	1	
IC440	T74VHC08F	IC	1	
IC441	L7A1433	IC	1	
IC442	TC7S66F	IC	1	
IC443	MB81V4260S7	IC	1	
IC461	MN673711	IC	1	
IC462	M65401FP	IC	1	
IC463	M52660FP	IC	1	
IC464	TCVHC257F	IC	1	
IC465	T74VHCT244F	IC	1	
IC466	EPM7128STC15	IC	1	
IC510	MN67372A2	IC	1	
IC511	T74VHC244F	IC	1	
IC512	MN4707F	IC	1	
IC540,41	T74VHC244F	IC	2	
IC544	T74VHC32F	IC	1	
IC545,46	TC4S53F	IC	2	
IC640	CY7C19920ZC	IC	1	
IC641	EPM7128STC15	IC	1	
IC642	CG25123-5106	IC	1	
IC643,44	UPD42280G3	IC	2	
IC645	CY7C19920ZC	IC	1	
IC670	T74VHC244F	IC	1	
IC671	T160G70-1601	IC	1	
IC760-63	UPD42280G3	IC	4	
IC764-67	74ALS541SJ	IC	4	
IC780	EPM7128STC15	IC	1	
IC782	T74VHC244F	IC	1	
IC783	D485505G25	IC	1	
IC784	T74VHC244F	IC	1	
IC800	UPD42280G3	IC	1	
IC801	MC10H125M	IC	1	
IC802,03	T74LCX244F	IC	2	
IC804	T74VHC74F	IC	1	
IC805	UPD65843G026	IC	1	
IC840	UPD65868D022	IC	1	
IC870	VSI2705	IC	1	
IC871	T74VHC08F	IC	1	
IC910	VSI2705	IC	1	
IC911	T74VHC08F	IC	1	
IC912	T74VHCU04F	IC	1	
IC913	S80727ANDQ	IC	1	
IC980	T74VHC244F	IC	1	
IC981-83	TCVHC257F	IC	3	
IC984,85	T74VHCT244F	IC	2	
IC986	T74VHC74F	IC	1	
IC1020,21	UPD42280G3	IC	2	
IC1050,51	T74VHC244F	IC	2	

Ref.No.	Part No.	Part Name & Description	Pcs	Remarks
IC1052	TC7S04F	IC	1	
IC1053,54	T74VHC244F	IC	2	
IC1110	T74VHC244F	IC	1	
IC1111	TC4W53F	IC	1	
IS104	VJS3109	CONNECTOR (FEMALE)	1	FOR VEP83405B
L60-62	VLP0133	COIL	3	
L170-72	VLQ0319K470	COIL 47UH	3	
L174	VLQ0319M1R5	COIL 1.5UH	1	
L175	VLQ0163J3R9	COIL 3.9UH	1	
L176	VLQ0319K470	COIL 47UH	1	
L420	VLQ0163J1R5	COIL 1.5UH	1	
L460-62	VLQ0319K100	COIL 10UH	3	
P1	VJP3454B096	CONNECTOR (MALE)	1	
P1	VJS4064K160E	CONNECTOR (FEMALE)	1	FOR VEP83405B
P2	VJP3454B096	CONNECTOR (MALE)	1	
P60	VJP1246T	CONNECTOR (MALE) 6P	1	
P1050	VJP3418B060	CONNECTOR (MALE)	1	
P1060	VJP4064K160C	CONNECTOR (MALE)	1	
P1110	VJP4064K040C	CONNECTOR (MALE)	1	
Q170	2SC2295-C	TRANSISTOR	1	
R1	ERJ3GEY0R00	M.RESISTOR CH 1/16W 0	1	FOR VEP83405B
R1	ERJ3GEYJ470	M.RESISTOR CH 1/16W 47	1	
R2	ERJ3GEY0R00	M.RESISTOR CH 1/16W 0	1	FOR VEP83405B
R2	ERJ3GEYJ470	M.RESISTOR CH 1/16W 47	1	
R3	ERJ3GEY0R00	M.RESISTOR CH 1/16W 0	1	FOR VEP83405B
R3-19	ERJ3GEYJ470	M.RESISTOR CH 1/16W 47	17	
R20	ERJ3GEYJ473	M.RESISTOR CH 1/16W 47K	1	FOR VEP83405B
R21	ERJ3GEYJ273	M.RESISTOR CH 1/16W 27K	1	FOR VEP83405B
R21	ERJ3GEYJ470	M.RESISTOR CH 1/16W 47	1	
R22	ERJ3GEYG471	M.RESISTOR CH 1/16W 470	1	FOR VEP83405B
R22	ERJ3GEYJ470	M.RESISTOR CH 1/16W 47	1	
R23	ERJ3GEYJ103	M.RESISTOR CH 1/16W 10K	1	FOR VEP83405B
R23	ERJ3GEYJ470	M.RESISTOR CH 1/16W 47	1	
R24	ERJ3GEYJ103	M.RESISTOR CH 1/16W 10K	1	FOR VEP83405B
R24	ERJ3GEYJ470	M.RESISTOR CH 1/16W 47	1	
R25	ERJ3GEYJ153	M.RESISTOR CH 1/16W 15K	1	FOR VEP83405B
R25	ERJ3GEYJ470	M.RESISTOR CH 1/16W 47	1	
R26	ERJ3GEYJ223	M.RESISTOR CH 1/16W 22K	1	FOR VEP83405B
R26	ERJ3GEYJ470	M.RESISTOR CH 1/16W 47	1	
R27	ERJ3GEYJ105	M.RESISTOR CH 1/16W 1M	1	FOR VEP83405B
R27	ERJ3GEYJ470	M.RESISTOR CH 1/16W 47	1	
R28	ERJ3GEYG102	M.RESISTOR CH 1/16W 1K	1	FOR VEP83405B
R28-46	ERJ3GEYJ470	M.RESISTOR CH 1/16W 47	19	
R47	ERJ3GEY0R00	M.RESISTOR CH 1/16W 0	1	
R48-53	ERJ3GEYJ470	M.RESISTOR CH 1/16W 47	6	
R54	ERJ3GEY0R00	M.RESISTOR CH 1/16W 0	1	FOR VEP83405B
R54	ERJ3GEYJ470	M.RESISTOR CH 1/16W 47	1	
R55-57	ERJ3GEY0R00	M.RESISTOR CH 1/16W 0	3	
R58	ERJ3GEYJ101	M.RESISTOR CH 1/16W 100	1	
R59-63	ERJ3GEYG472	M.RESISTOR CH 1/16W 4.7K	5	
R64,65	ERJ3GEY0R00	M.RESISTOR CH 1/16W 0	2	
R66	ERJ3GEYG472	M.RESISTOR CH 1/16W 4.7K	1	
R78	ERJ3GEY0R00	M.RESISTOR CH 1/16W 0	1	FOR VEP83405B
R78	ERJ3GEYG102	M.RESISTOR CH 1/16W 1K	1	
R80	ERJ3GEY0R00	M.RESISTOR CH 1/16W 0	1	FOR VEP83405B
R80	ERJ3GEYG102	M.RESISTOR CH 1/16W 1K	1	
R81	ERJ3GEY0R00	M.RESISTOR CH 1/16W 0	1	FOR VEP83405B
R81	ERJ3GEYG102	M.RESISTOR CH 1/16W 1K	1	
R82-02	ERJ3GEY0R00	M.RESISTOR CH 1/16W 0	3	FOR VEP83405B
R84,85	ERJ3GEYG102	M.RESISTOR CH 1/16W 1K	2	
R87	ERJ3GEY0R00	M.RESISTOR CH 1/16W 0	1	
R92-95	ERJ3GEYG102	M.RESISTOR CH 1/16W 1K	4	FOR VEP83405B
R96	ERJ3GEY0R00	M.RESISTOR CH 1/16W 0	1	FOR VEP83405B
R98	ERJ3GEY0R00	M.RESISTOR CH 1/16W 0	1	FOR VEP83405B
R101	ERJ3GEY0R00	M.RESISTOR CH 1/16W 0	1	
R102	ERJ3GEYG102	M.RESISTOR CH 1/16W 1K	1	FOR VEP83405B
R102	ERJ3GEYJ103	M.RESISTOR CH 1/16W 10K	1	
R103	ERJ3GEYG102	M.RESISTOR CH 1/16W 1K	1	FOR VEP83405B
R103	ERJ3GEYJ103	M.RESISTOR CH 1/16W 10K	1	
R104	ERJ3GEY0R00	M.RESISTOR CH 1/16W 0	1	

Ref.No.	Part No.	Part Name & Description	Pcs	Remarks
R105	ERJ3GEYG102	M.RESISTOR CH 1/16W 1K	1	
R106	ERJ3GEYJ101	M.RESISTOR CH 1/16W 100	1	
R106	ERJ3GEYJ103	M.RESISTOR CH 1/16W 10K	1	FOR VEP83405B
R107	ERJ3GEYJ101	M.RESISTOR CH 1/16W 100	1	
R107	ERJ3GEYJ103	M.RESISTOR CH 1/16W 10K	1	FOR VEP83405B
R108	ERJ3GEY0R00	M.RESISTOR CH 1/16W 0	1	FOR VEP83405B
R108	ERJ3GEYJ272	M.RESISTOR CH 1/16W 2.7K	1	
R109	ERJ3GEYJ103	M.RESISTOR CH 1/16W 10K	1	FOR VEP83405B
R109	ERJ3GEYJ272	M.RESISTOR CH 1/16W 2.7K	1	
R110	ERJ3GEYJ103	M.RESISTOR CH 1/16W 10K	1	FOR VEP83405B
R110	ERJ3GEYJ272	M.RESISTOR CH 1/16W 2.7K	1	
R111	ERJ3GEYJ103	M.RESISTOR CH 1/16W 10K	1	FOR VEP83405B
R111-13	ERJ3GEYJ272	M.RESISTOR CH 1/16W 2.7K	3	
R114	ERJ3GEYJ101	M.RESISTOR CH 1/16W 100	1	FOR VEP83405B
R114	ERJ3GEYJ272	M.RESISTOR CH 1/16W 2.7K	1	
R115	ERJ3GEY0R00	M.RESISTOR CH 1/16W 0	1	FOR VEP83405B
R115	ERJ3GEYJ272	M.RESISTOR CH 1/16W 2.7K	1	
R116	ERJ3GEY0R00	M.RESISTOR CH 1/16W 0	1	FOR VEP83405B
R116	ERJ3GEYJ103	M.RESISTOR CH 1/16W 10K	1	
R117	ERJ3GEYG102	M.RESISTOR CH 1/16W 1K	1	FOR VEP83405B
R117	ERJ3GEYJ103	M.RESISTOR CH 1/16W 10K	1	
R118	ERJ3GEYG102	M.RESISTOR CH 1/16W 1K	1	FOR VEP83405B
R118	ERJ3GEYJ103	M.RESISTOR CH 1/16W 10K	1	
R119	ERJ3GEYG102	M.RESISTOR CH 1/16W 1K	1	FOR VEP83405B
R119	ERJ3GEYJ103	M.RESISTOR CH 1/16W 10K	1	
R120,21	ERJ3GEYG102	M.RESISTOR CH 1/16W 1K	2	
R122	ERJ3GEYG102	M.RESISTOR CH 1/16W 1K	1	FOR VEP83405B
R122	ERJ3GEYJ103	M.RESISTOR CH 1/16W 10K	1	
R123	ERJ3GEY0R00	M.RESISTOR CH 1/16W 0	1	
R124	ERJ3GEYJ101	M.RESISTOR CH 1/16W 100	1	
R127	ERJ3GEYJ103	M.RESISTOR CH 1/16W 10K	1	
R128	ERJ3GEYJ103	M.RESISTOR CH 1/16W 10K	1	
R128	ERJ3GEYJ103	M.RESISTOR CH 1/16W 10K	1	FOR VEP83405B
R132-35	ERJ3GEYJ103	M.RESISTOR CH 1/16W 10K	4	
R136	ERJ3GEY0R00	M.RESISTOR CH 1/16W 0	1	
R137-40	ERJ3GEYJ103	M.RESISTOR CH 1/16W 10K	4	
R144	ERJ3GEYJ101	M.RESISTOR CH 1/16W 100	1	
R145	ERJ3GEY0R00	M.RESISTOR CH 1/16W 0	1	
R147,48	ERJ3GEYJ103	M.RESISTOR CH 1/16W 10K	2	
R150	ERJ3GEY0R00	M.RESISTOR CH 1/16W 0	1	
R152,53	ERJ3GEYJ101	M.RESISTOR CH 1/16W 100	2	
R154-61	ERJ3GEYG472	M.RESISTOR CH 1/16W 4.7K	8	
R170,71	ERJ3GEY0R00	M.RESISTOR CH 1/16W 0	2	
R172	ERJ3GEYJ473	M.RESISTOR CH 1/16W 47K	1	
R173	ERJ3GEYG471	M.RESISTOR CH 1/16W 470	1	
R174	ERJ3GEYG222	M.RESISTOR CH 1/16W 2.2K	1	
R175	ERJ3GEYG472	M.RESISTOR CH 1/16W 4.7K	1	
R176	ERJ3GEYJ123	M.RESISTOR CH 1/16W 12K	1	
R177,78	ERJ3GEYJ103	M.RESISTOR CH 1/16W 10K	2	
R179	ERJ3GEYG472	M.RESISTOR CH 1/16W 4.7K	1	
R180	ERJ3GEYG222	M.RESISTOR CH 1/16W 2.2K	1	
R181	ERJ3GEYJ473	M.RESISTOR CH 1/16W 47K	1	
R182	ERJ3GEYJ273	M.RESISTOR CH 1/16W 27K	1	
R183	ERJ3GEYJ105	M.RESISTOR CH 1/16W 1M	1	
R184,85	ERJ3GEYJ103	M.RESISTOR CH 1/16W 10K	2	
R186	ERJ3GEYG102	M.RESISTOR CH 1/16W 1K	1	
R187	ERJ3GEY0R00	M.RESISTOR CH 1/16W 0	1	
R188	ERJ3GEYG102	M.RESISTOR CH 1/16W 1K	1	
R189	ERJ3GEYJ223	M.RESISTOR CH 1/16W 22K	1	
R190	ERJ3GEYJ105	M.RESISTOR CH 1/16W 1M	1	
R191,92	ERJ3GEYG102	M.RESISTOR CH 1/16W 1K	2	
R193	ERJ3GEYG472	M.RESISTOR CH 1/16W 4.7K	1	
R194,95	ERJ3GEY0R00	M.RESISTOR CH 1/16W 0	2	
R196	ERJ3GEYG102	M.RESISTOR CH 1/16W 1K	1	
R197	ERJ3GEYJ103	M.RESISTOR CH 1/16W 10K	1	
R198	ERJ3GEYG102	M.RESISTOR CH 1/16W 1K	1	
R199	ERJ3GEYJ103	M.RESISTOR CH 1/16W 10K	1	
R200	ERJ3GEY0R00	M.RESISTOR CH 1/16W 0	1	FOR VEP83405B
R200	ERJ3GEYJ221	M.RESISTOR CH 1/16W 220	1	
R201	ERJ3GEY0R00	M.RESISTOR CH 1/16W 0	1	FOR VEP83405B
R201,02	ERJ3GEYJ101	M.RESISTOR CH 1/16W 100	2	FOR VEP83405B
R202	ERJ3GEYJ103	M.RESISTOR CH 1/16W 10K	1	
R203	ERJ3GEYJ223	M.RESISTOR CH 1/16W 22K	1	
R204	ERJ3GEYJ105	M.RESISTOR CH 1/16W 1M	1	
R205	ERJ3GEYJ331	M.RESISTOR CH 1/16W 330	1	

Ref.No.	Part No.	Part Name & Description	Pcs	Remarks
R206	ERJ3GEYJ272	M.RESISTOR CH 1/16W 2.7K	1	
R207,08	ERJ3GEYG102	M.RESISTOR CH 1/16W 1K	2	
R209,10	ERJ3GEY0R00	M.RESISTOR CH 1/16W 0	2	
R211-13	ERJ3GEYJ101	M.RESISTOR CH 1/16W 100	3	
R216-22	ERJ3GEYJ470	M.RESISTOR CH 1/16W 47	7	
R223	ERJ3GEY0R00	M.RESISTOR CH 1/16W 0	1	
R228-35	ERJ3GEYJ470	M.RESISTOR CH 1/16W 47	8	
R236-39	ERJ3GEYJ101	M.RESISTOR CH 1/16W 100	4	
R240	ERJ3GEY0R00	M.RESISTOR CH 1/16W 0	1	
R241	ERJ3GEYG471	M.RESISTOR CH 1/16W 470	1	
R242	ERJ3GEY0R00	M.RESISTOR CH 1/16W 0	1	
R243	ERJ3GEYG471	M.RESISTOR CH 1/16W 470	1	
R244	ERJ3GEY0R00	M.RESISTOR CH 1/16W 0	1	
R245	ERJ3GEYJ221	M.RESISTOR CH 1/16W 220	1	
R246	ERJ3GEY0R00	M.RESISTOR CH 1/16W 0	1	
R247	ERJ3GEYJ221	M.RESISTOR CH 1/16W 220	1	
R248	ERJ3GEY0R00	M.RESISTOR CH 1/16W 0	1	
R249	ERJ3GEYG471	M.RESISTOR CH 1/16W 470	1	
R250	ERJ3GEY0R00	M.RESISTOR CH 1/16W 0	1	
R251	ERJ3GEYG471	M.RESISTOR CH 1/16W 470	1	
R252	ERJ3GEY0R00	M.RESISTOR CH 1/16W 0	1	
R253	ERJ3GEYG471	M.RESISTOR CH 1/16W 470	1	
R254	ERJ3GEY0R00	M.RESISTOR CH 1/16W 0	1	
R255	ERJ3GEYG471	M.RESISTOR CH 1/16W 470	1	
R256-58	ERJ3GEYJ470	M.RESISTOR CH 1/16W 47	3	
R260,61	ERJ3GEYJ470	M.RESISTOR CH 1/16W 47	2	
R264-67	ERJ3GEYJ470	M.RESISTOR CH 1/16W 47	4	
R272-87	ERJ3GEYJ470	M.RESISTOR CH 1/16W 47	16	
R288	ERJ3GEY0R00	M.RESISTOR CH 1/16W 0	1	
R290	ERJ3GEYJ103	M.RESISTOR CH 1/16W 10K	1	
R291	ERJ3GEY0R00	M.RESISTOR CH 1/16W 0	1	
R293	ERJ3GEYJ103	M.RESISTOR CH 1/16W 10K	1	
R300-15	ERJ3GEYJ103	M.RESISTOR CH 1/16W 10K	16	
R316,17	ERJ3GEYJ101	M.RESISTOR CH 1/16W 100	2	
R318,19	ERJ3GEY0R00	M.RESISTOR CH 1/16W 0	2	
R320	ERJ3GEYJ101	M.RESISTOR CH 1/16W 100	1	
R330,31	ERJ3GEYJ101	M.RESISTOR CH 1/16W 100	2	
R333-36	ERJ3GEYJ103	M.RESISTOR CH 1/16W 10K	4	
R337,38	ERJ3GEYJ470	M.RESISTOR CH 1/16W 47	2	
R340,41	ERJ3GEYJ101	M.RESISTOR CH 1/16W 100	2	
R342	ERJ3GEY0R00	M.RESISTOR CH 1/16W 0	1	
R344-48	ERJ3GEYJ470	M.RESISTOR CH 1/16W 47	5	
R351	ERJ3GEYJ103	M.RESISTOR CH 1/16W 10K	1	
R353-61	ERJ3GEYG472	M.RESISTOR CH 1/16W 4.7K	9	
R362-65	ERJ3GEYJ103	M.RESISTOR CH 1/16W 10K	4	
R366-74	ERJ3GEYJ273	M.RESISTOR CH 1/16W 27K	9	
R380	ERJ3GEYJ223	M.RESISTOR CH 1/16W 22K	1	
R400	ERJ3GEYJ103	M.RESISTOR CH 1/16W 10K	1	
R401	ERJ3GEY0R00	M.RESISTOR CH 1/16W 0	1	
R402	ERJ3GEYG471	M.RESISTOR CH 1/16W 470	1	
R403	ERJ3GEY0R00	M.RESISTOR CH 1/16W 0	1	
R404	ERJ3GEYG471	M.RESISTOR CH 1/16W 470	1	
R407	ERJ3GEY0R00	M.RESISTOR CH 1/16W 0	1	
R408	ERJ3GEYG471	M.RESISTOR CH 1/16W 470	1	
R409	ERJ3GEY0R00	M.RESISTOR CH 1/16W 0	1	
R410	ERJ3GEYG471	M.RESISTOR CH 1/16W 470	1	
R420	ERJ3GEYJ103	M.RESISTOR CH 1/16W 10K	1	
R421	ERJ3GEYJ470	M.RESISTOR CH 1/16W 47	1	
R422	ERJ3GEYJ105	M.RESISTOR CH 1/16W 1M	1	
R440,41	ERJ3GEY0R00	M.RESISTOR CH 1/16W 0	2	
R442	ERJ3GEYG102	M.RESISTOR CH 1/16W 1K	1	
R443	ERJ3GEYJ223	M.RESISTOR CH 1/16W 22K	1	
R444-53	ERJ3GEYJ273	M.RESISTOR CH 1/16W 27K	10	
R462	ERJ3GEY0R00	M.RESISTOR CH 1/16W 0	1	
R464-66	ERJ3GEYJ103	M.RESISTOR CH 1/16W 10K	3	
R469	ERJ3GEYJ391	M.RESISTOR CH 1/16W 390	1	
R470	ERJ3GEYJ681	M.RESISTOR CH 1/16W 680	1	
R471	ERJ3GEYJ391	M.RESISTOR CH 1/16W 390	1	
R472	ERJ3GEY0R00	M.RESISTOR CH 1/16W 0	1	
R473	ERJ3GEYJ681	M.RESISTOR CH 1/16W 680	1	
R476	ERJ3GEYJ103	M.RESISTOR CH 1/16W 10K	1	
R477	ERJ3GEYJ393	M.RESISTOR CH 1/16W 39K	1	
R478	ERJ3GEYJ222	M.RESISTOR CH 1/16W 2.2K	1	
R480	ERJ3GEYJ101	M.RESISTOR CH 1/16W 100	1	
R481	ERJ3GEYJ103	M.RESISTOR CH 1/16W 10K	1	

Ref.No.	Part No.	Part Name & Description	Pcs	Remarks
R483	ERJ3GEYJ681	M.RESISTOR CH 1/16W 680	1	
R484	ERJ3GEYJ391	M.RESISTOR CH 1/16W 390	1	
R487	ERJ3GEYJ470	M.RESISTOR CH 1/16W 47	1	
R488	ERJ3GEYJ101	M.RESISTOR CH 1/16W 100	1	
R489-94	ERJ3GEYG472	M.RESISTOR CH 1/16W 4.7K	6	
R497	ERJ3GEYG102	M.RESISTOR CH 1/16W 1K	1	
R510	ERJ3GEYJ101	M.RESISTOR CH 1/16W 100	1	
R540,41	ERJ3GEY0R00	M.RESISTOR CH 1/16W 0	2	
R543	ERJ3GEYJ101	M.RESISTOR CH 1/16W 100	1	
R544	ERJ3GEY0R00	M.RESISTOR CH 1/16W 0	1	
R547-50	ERJ3GEYG102	M.RESISTOR CH 1/16W 1K	4	
R551	ERJ3GEYJ103	M.RESISTOR CH 1/16W 10K	1	
R552-54	ERJ3GEYG102	M.RESISTOR CH 1/16W 1K	3	
R555	ERJ3GEYJ101	M.RESISTOR CH 1/16W 100	1	
R556	ERJ3GEY0R00	M.RESISTOR CH 1/16W 0	1	
R640-42	ERJ3GEYJ103	M.RESISTOR CH 1/16W 10K	3	
R643	ERJ3GEY0R00	M.RESISTOR CH 1/16W 0	1	
R644	ERJ3GEYJ271	M.RESISTOR CH 1/16W 270	1	
R645	ERJ3GEYJ101	M.RESISTOR CH 1/16W 100	1	
R647	ERJ3GEY0R00	M.RESISTOR CH 1/16W 0	1	
R651-53	ERJ3GEY0R00	M.RESISTOR CH 1/16W 0	3	
R655	ERJ3GEY0R00	M.RESISTOR CH 1/16W 0	1	
R659	ERJ3GEYG102	M.RESISTOR CH 1/16W 1K	1	
R670-72	ERJ3GEYJ103	M.RESISTOR CH 1/16W 10K	3	
R675	ERJ3GEYJ101	M.RESISTOR CH 1/16W 100	1	
R713	ERJ3GEYG102	M.RESISTOR CH 1/16W 1K	1	
R714	ERJ3GEYJ103	M.RESISTOR CH 1/16W 10K	1	
R760	ERJ3GEYJ101	M.RESISTOR CH 1/16W 100	1	
R765	ERJ3GEYJ101	M.RESISTOR CH 1/16W 100	1	
R766	ERJ3GEY0R00	M.RESISTOR CH 1/16W 0	1	
R781,82	ERJ3GEYJ103	M.RESISTOR CH 1/16W 10K	2	
R784	ERJ3GEYJ101	M.RESISTOR CH 1/16W 100	1	
R800-03	ERJ3GEYJ101	M.RESISTOR CH 1/16W 100	4	
R804	ERJ3GEY0R00	M.RESISTOR CH 1/16W 0	1	
R806-08	ERJ3GEYJ101	M.RESISTOR CH 1/16W 100	3	
R811,12	ERJ3GEY0R00	M.RESISTOR CH 1/16W 0	2	
R815	ERJ3GEY0R00	M.RESISTOR CH 1/16W 0	1	
R819	ERJ3GEY0R00	M.RESISTOR CH 1/16W 0	1	
R821	ERJ3GEY0R00	M.RESISTOR CH 1/16W 0	1	
R826	ERJ3GEY0R00	M.RESISTOR CH 1/16W 0	1	
R827	ERJ3GEYG102	M.RESISTOR CH 1/16W 1K	1	
R828	ERJ3GEYJ103	M.RESISTOR CH 1/16W 10K	1	
R840-48	ERJ3GEYJ470	M.RESISTOR CH 1/16W 47	9	
R849-54	ERJ3GEYJ103	M.RESISTOR CH 1/16W 10K	6	
R855	ERJ3GEYG102	M.RESISTOR CH 1/16W 1K	1	
R856-59	ERJ3GEYJ103	M.RESISTOR CH 1/16W 10K	4	
R860-64	ERJ3GEYJ470	M.RESISTOR CH 1/16W 47	5	
R870	ERJ3GEYJ473	M.RESISTOR CH 1/16W 47K	1	
R871	ERJ3GEYG102	M.RESISTOR CH 1/16W 1K	1	
R873,74	ERJ3GEY0R00	M.RESISTOR CH 1/16W 0	2	
R876,77	ERJ3GEYJ222	M.RESISTOR CH 1/16W 2.2K	2	
R878,79	ERJ3GEYJ101	M.RESISTOR CH 1/16W 100	2	
R880	ERJ3GEYG102	M.RESISTOR CH 1/16W 1K	1	
R882	ERJ3GEYG102	M.RESISTOR CH 1/16W 1K	1	
R883	ERJ3GEYJ103	M.RESISTOR CH 1/16W 10K	1	
R886	ERJ3GEYJ103	M.RESISTOR CH 1/16W 10K	1	
R887,88	ERJ3GEYG472	M.RESISTOR CH 1/16W 4.7K	2	
R889-96	ERJ3GEYG102	M.RESISTOR CH 1/16W 1K	8	
R897	ERJ3GEYJ104	M.RESISTOR CH 1/16W 100K	1	
R899	ERJ3GEYJ104	M.RESISTOR CH 1/16W 100K	1	
R900	ERJ3GEY0R00	M.RESISTOR CH 1/16W 0	1	
R901	ERJ3GEYJ104	M.RESISTOR CH 1/16W 100K	1	
R910	ERJ3GEYJ473	M.RESISTOR CH 1/16W 47K	1	
R911	ERJ3GEYG102	M.RESISTOR CH 1/16W 1K	1	
R912	ERJ3GEYJ473	M.RESISTOR CH 1/16W 47K	1	
R913	ERJ3GEYJ103	M.RESISTOR CH 1/16W 10K	1	
R915,16	ERJ3GEY0R00	M.RESISTOR CH 1/16W 0	2	
R918	ERJ3GEY0R00	M.RESISTOR CH 1/16W 0	1	
R919	ERJ3GEYJ105	M.RESISTOR CH 1/16W 1M	1	
R920	ERJ3GEYJ271	M.RESISTOR CH 1/16W 270	1	
R921	ERJ3GEYJ473	M.RESISTOR CH 1/16W 47K	1	
R922	ERJ3GEYJ103	M.RESISTOR CH 1/16W 10K	1	
R923,24	ERJ3GEYG102	M.RESISTOR CH 1/16W 1K	2	
R926,27	ERJ3GEY0R00	M.RESISTOR CH 1/16W 0	2	
R928	ERJ3GEYJ222	M.RESISTOR CH 1/16W 2.2K	1	

Ref.No.	Part No.	Part Name & Description	Pcs	Remarks
R930	ERJ3GEYJ222	M.RESISTOR CH 1/16W 2.2K	1	
R934,35	ERJ3GEYJ101	M.RESISTOR CH 1/16W 100	2	
R937	ERJ3GEY0R00	M.RESISTOR CH 1/16W 0	1	
R938-40	ERJ3GEYG102	M.RESISTOR CH 1/16W 1K	3	
R941,42	ERJ3GEYG472	M.RESISTOR CH 1/16W 4.7K	2	
R943,44	ERJ3GEY0R00	M.RESISTOR CH 1/16W 0	2	
R945	ERJ3GEYJ103	M.RESISTOR CH 1/16W 10K	1	
R946	ERJ3GEYG472	M.RESISTOR CH 1/16W 4.7K	1	
R947	ERJ3GEYG102	M.RESISTOR CH 1/16W 1K	1	
R948	ERJ3GEYJ103	M.RESISTOR CH 1/16W 10K	1	
R949,50	ERJ3GEY0R00	M.RESISTOR CH 1/16W 0	2	
R951-53	ERJ3GEYG102	M.RESISTOR CH 1/16W 1K	3	
R954	ERJ3GEY0R00	M.RESISTOR CH 1/16W 0	1	
R955,56	ERJ3GEYG102	M.RESISTOR CH 1/16W 1K	2	
R957	ERJ3GEYJ101	M.RESISTOR CH 1/16W 100	1	
R958	ERJ3GEYG102	M.RESISTOR CH 1/16W 1K	1	
R959	ERJ3GEYJ101	M.RESISTOR CH 1/16W 100	1	
R960	ERJ3GEYJ473	M.RESISTOR CH 1/16W 47K	1	
R961	ERJ3GEY0R00	M.RESISTOR CH 1/16W 0	1	
R962	ERJ3GEYJ104	M.RESISTOR CH 1/16W 100K	1	
R964	ERJ3GEYJ104	M.RESISTOR CH 1/16W 100K	1	
R965	ERJ3GEY0R00	M.RESISTOR CH 1/16W 0	1	
R966	ERJ3GEYJ104	M.RESISTOR CH 1/16W 100K	1	
R967	ERJ3GEY0R00	M.RESISTOR CH 1/16W 0	1	
R980-87	ERJ3GEYJ103	M.RESISTOR CH 1/16W 10K	8	
R988-93	ERJ3GEYJ101	M.RESISTOR CH 1/16W 100	6	
R994-07	ERJ3GEYG472	M.RESISTOR CH 1/16W 4.7K	14	
R1009	ERJ3GEYG472	M.RESISTOR CH 1/16W 4.7K	1	
R1020,21	ERJ3GEY0R00	M.RESISTOR CH 1/16W 0	2	
R1023-27	ERJ3GEY0R00	M.RESISTOR CH 1/16W 0	5	
R1037	ERJ3GEYJ101	M.RESISTOR CH 1/16W 100	1	
R1040	ERJ3GEYJ101	M.RESISTOR CH 1/16W 100	1	
R1041-48	ERJ3GEY0R00	M.RESISTOR CH 1/16W 0	8	
R1050	ERJ3GEYJ331	M.RESISTOR CH 1/16W 330	1	
R1051	ERJ3GEYJ103	M.RESISTOR CH 1/16W 10K	1	
R1060	ERJ3GEYJ103	M.RESISTOR CH 1/16W 10K	1	
R1110	ERJ3GEY0R00	M.RESISTOR CH 1/16W 0	1	
R1111	ERJ3GEYJ103	M.RESISTOR CH 1/16W 10K	1	
R1112	ERJ3GEYG102	M.RESISTOR CH 1/16W 1K	1	
R1113	ERJ3GEYJ101	M.RESISTOR CH 1/16W 100	1	
R1114	ERJ3GEYJ103	M.RESISTOR CH 1/16W 10K	1	
R1150	ERJ3GEY0R00	M.RESISTOR CH 1/16W 0	1	
SW100	VSS0342	SWITCH	1	
SW330	VSS0367-02B	SWITCH	1	
SW331	VSS0367-08B	SWITCH	1	
SW1110	VSS0342	SWITCH	1	
TG1-G3	EYF6CU	TEST POINT	3	
TG13-15	EYF6CU	TEST POINT	3	FOR VEP83405B
TG171	VJR0646	TEST POINT	1	
TG462	VJR0646	TEST POINT	1	
TG910	EYF6CU	TEST POINT	1	
TP1-12	EYF6CU	TEST POINT	12	FOR VEP83405B
TP20-22	EYF6CU	TEST POINT	3	FOR VEP83405B
TP50,51	EYF6CU	TEST POINT	2	FOR VEP83405B
TP130,31	EYF6CU	TEST POINT	2	
TP170	VJR0646	TEST POINT	1	
TP300,01	EYF6CU	TEST POINT	2	
TP303,04	EYF6CU	TEST POINT	2	
TP400	EYF6CU	TEST POINT	1	
TP421	EYF6CU	TEST POINT	1	
TP440,41	EYF6CU	TEST POINT	2	
TP460	EYF6CU	TEST POINT	1	
TP510	EYF6CU	TEST POINT	1	
TP870,71	EYF6CU	TEST POINT	2	
TP911,12	EYF6CU	TEST POINT	2	
VC170	ECV1ZW50X53T	TRIMMER	1	
VR460-62	EVMEGSA00B24	V.RESISTOR 20K	3	
X20	VSX0973	CRYSTAL OSCILLATOR	1	FOR VEP83405B
X420	VSX0645	CRYSTAL OSCILLATOR	1	

Ref.No.	Part No.	Part Name & Description	Pcs	Remarks
X910	VSX0637	CRYSTAL OSCILLATOR	1	
		MISCELLANEOUS		
	VML2143	CARD PULLER	1	
	VML2144	CARD PULLER	1	
	VMX2020	SPACER	4	FOR VEP83405B
	XYN3+K5	SCREW	4	FOR VEP83405B
	XYN3+K6	SCREW	4	FOR VEP83405B

Ref.No.	Part No.	Part Name & Description	Pcs	Remarks
■E6	VEP83409B	F6 VIDEO IN P.C.BOARD	1	(RTL)FOR AJ-D850P
C1,C2	ECUM1H103KBN	C.CAPACITOR CH 50V 0.01U	2	
C3	ECUM1H820JCN	C.CAPACITOR CH 50V 82P	1	
C4	ECUM1H103KBN	C.CAPACITOR CH 50V 0.01U	1	
C5-C7	ECUM1E104ZFN	C.CAPACITOR CH 25V 0.1U	3	
C8	ECEV0JV330Q	E.CAPACITOR CH6.3V 33U	1	
C9	ECUM1H101JCN	C.CAPACITOR CH 50V 100P	1	
C20-26	ECUM1E104ZFN	C.CAPACITOR CH 25V 0.1U	7	
C27	ECEV0JV330Q	E.CAPACITOR CH6.3V 33U	1	
C28	ECUM1E104ZFN	C.CAPACITOR CH 25V 0.1U	1	
C29	ECEV0JV330Q	E.CAPACITOR CH6.3V 33U	1	
C30	ECUM1E104ZFN	C.CAPACITOR CH 25V 0.1U	1	
C31	ECEV0JV330Q	E.CAPACITOR CH6.3V 33U	1	
C32	ECUM1E104ZFN	C.CAPACITOR CH 25V 0.1U	1	
C33	ECEV1EV4R7Q	E.CAPACITOR CH 25V 4.7U	1	
C51	ECUM1H101JCN	C.CAPACITOR CH 50V 100P	1	
C101,02	ECUM1E104ZFN	C.CAPACITOR CH 25V 0.1U	2	
C103	ECEV1CV470Q	E.CAPACITOR CH 16V 47U	1	
C104-06	ECUM1E104ZFN	C.CAPACITOR CH 25V 0.1U	3	
C107	ECEV0JV330Q	E.CAPACITOR CH6.3V 33U	1	
C108	ECUM1E104ZFN	C.CAPACITOR CH 25V 0.1U	1	
C109	ECEV1CV470Q	E.CAPACITOR CH 16V 47U	1	
C110-12	ECUM1E104ZFN	C.CAPACITOR CH 25V 0.1U	3	
C113	ECEV1CV470Q	E.CAPACITOR CH 16V 47U	1	
C114-16	ECUM1E104ZFN	C.CAPACITOR CH 25V 0.1U	3	
C117	ECEV0JV330Q	E.CAPACITOR CH6.3V 33U	1	
C118	ECUM1E104ZFN	C.CAPACITOR CH 25V 0.1U	1	
C119	ECEV1CV470Q	E.CAPACITOR CH 16V 47U	1	
C120	ECUM1E104ZFN	C.CAPACITOR CH 25V 0.1U	1	
C133,34	ECUM1E104ZFN	C.CAPACITOR CH 25V 0.1U	2	
C135	ECEV0JV330Q	E.CAPACITOR CH6.3V 33U	1	
C136	ECUM1E683KBN	C.CAPACITOR CH 25V 0.068U	1	
C137	ECUM1H471JCN	C.CAPACITOR CH 50V 470P	1	
C138	ECEV1HV010Q	E.CAPACITOR CH 50V 1U	1	
C139	ECUM1E104ZFN	C.CAPACITOR CH 25V 0.1U	1	
C140	ECEV1HV4R7Q	E.CAPACITOR CH 50V 4.7U	1	
C141	ECUM1H821JCN	C.CAPACITOR CH 50V 820P	1	
C142	ECEV0JV330Q	E.CAPACITOR CH6.3V 33U	1	
C143	ECUX1H392KBN	C.CAPACITOR CH 50V 3900P	1	
C144	ECUM1H152KBN	C.CAPACITOR CH 50V 1500P	1	
C145	ECEV1HVR68Q	E.CAPACITOR CH 50V 0.68U	1	
C146	ECUM1E104ZFN	C.CAPACITOR CH 25V 0.1U	1	
C151-58	ECUM1E104ZFN	C.CAPACITOR CH 25V 0.1U	8	
C160	ECUM1E104ZFN	C.CAPACITOR CH 25V 0.1U	1	
C161	ECUM1H101JCN	C.CAPACITOR CH 50V 100P	1	
C164	ECCF1H221JC	C.CAPACITOR 50V 220P	1	
C201-05	ECUM1E104ZFN	C.CAPACITOR CH 25V 0.1U	5	
C207-10	ECUM1E104ZFN	C.CAPACITOR CH 25V 0.1U	4	
C211	ECUM1H103KBN	C.CAPACITOR CH 50V 0.01U	1	
C251-54	ECUM1E104ZFN	C.CAPACITOR CH 25V 0.1U	4	
C256-58	ECUM1E104ZFN	C.CAPACITOR CH 25V 0.1U	3	
C262-66	ECUM1E104ZFN	C.CAPACITOR CH 25V 0.1U	5	
C301	ECEV1CV100Q	E.CAPACITOR CH 16V 10U	1	
C302	ECUM1E104ZFN	C.CAPACITOR CH 25V 0.1U	1	
C303	ECEV1EV4R7Q	E.CAPACITOR CH 25V 4.7U	1	
C304-06	ECUM1E104ZFN	C.CAPACITOR CH 25V 0.1U	3	
C307	ECEV1CV100Q	E.CAPACITOR CH 16V 10U	1	
C308	ECUM1E104ZFN	C.CAPACITOR CH 25V 0.1U	1	
C309	ECEV1CV100Q	E.CAPACITOR CH 16V 10U	1	
C310,11	ECUM1E104ZFN	C.CAPACITOR CH 25V 0.1U	2	
C312	ECUX1E104KBN	C.CAPACITOR CH 25V 0.1U	1	
C317	ECEV1CV100Q	E.CAPACITOR CH 16V 10U	1	
C318-21	ECUM1E104ZFN	C.CAPACITOR CH 25V 0.1U	4	
C351	ECEV0JV330Q	E.CAPACITOR CH6.3V 33U	1	
C352	ECUM1E104ZFN	C.CAPACITOR CH 25V 0.1U	1	
C353	ECEV0JV330Q	E.CAPACITOR CH6.3V 33U	1	
C354	ECUM1E104ZFN	C.CAPACITOR CH 25V 0.1U	1	
C355	ECEV0JV330Q	E.CAPACITOR CH6.3V 33U	1	
C356	ECUM1E104ZFN	C.CAPACITOR CH 25V 0.1U	1	
C357	ECEV0JV330Q	E.CAPACITOR CH6.3V 33U	1	
C358	ECUM1E104ZFN	C.CAPACITOR CH 25V 0.1U	1	
C359	ECEV1CV470Q	E.CAPACITOR CH 16V 47U	1	

Ref.No.	Part No.	Part Name & Description	Pcs	Remarks
C360	ECUM1E104ZFN	C.CAPACITOR CH 25V 0.1U	1	
C363-65	ECUM1E104ZFN	C.CAPACITOR CH 25V 0.1U	3	
C367	ECUX1E104KBN	C.CAPACITOR CH 25V 0.1U	1	
C368	ECUM1H180JCN	C.CAPACITOR CH 50V 18P	1	
C370-72	ECUM1E104ZFN	C.CAPACITOR CH 25V 0.1U	3	
C373	ECEV0JV330Q	E.CAPACITOR CH6.3V 33U	1	
C374	ECUM1E104ZFN	C.CAPACITOR CH 25V 0.1U	1	
C375	ECEV0JV330Q	E.CAPACITOR CH6.3V 33U	1	
C376-83	ECUM1E104ZFN	C.CAPACITOR CH 25V 0.1U	8	
C401	ECEV0JV330Q	E.CAPACITOR CH6.3V 33U	1	
C402	ECUM1E104ZFN	C.CAPACITOR CH 25V 0.1U	1	
C403	ECUM1H470JCN	C.CAPACITOR CH 50V 47P	1	
C404	ECUM1H820JCN	C.CAPACITOR CH 50V 82P	1	
C405,06	ECUM1H103KBN	C.CAPACITOR CH 50V 0.01U	2	
C407	ECEV0JV330Q	E.CAPACITOR CH6.3V 33U	1	
C408	ECUM1E104ZFN	C.CAPACITOR CH 25V 0.1U	1	
C409	ECEV1HVR47Q	E.CAPACITOR CH 50V 0.47U	1	
C410,11	ECUM1H103KBN	C.CAPACITOR CH 50V 0.01U	2	
C417	ECUM1E104ZFN	C.CAPACITOR CH 25V 0.1U	1	
C418	ECEV0JV330Q	E.CAPACITOR CH6.3V 33U	1	
C419	ECUM1E104ZFN	C.CAPACITOR CH 25V 0.1U	1	
C420	ECEV0JV330Q	E.CAPACITOR CH6.3V 33U	1	
C421	ECUM1E104ZFN	C.CAPACITOR CH 25V 0.1U	1	
C425	ECEV0JV330Q	E.CAPACITOR CH6.3V 33U	1	
C426	ECUM1E104ZFN	C.CAPACITOR CH 25V 0.1U	1	
C427,28	ECEV1HV010Q	E.CAPACITOR CH 50V 1U	2	
C429	ECEV0JN470Q	E.CAPACITOR CH6.3V 47U	1	
C430	ECUX1H102JCN	C.CAPACITOR CH 50V 1000P	1	
C431	ECUM1H103KBN	C.CAPACITOR CH 50V 0.01U	1	
C432	ECUM1H221JCN	C.CAPACITOR CH 50V 220P	1	
C433	ECUM1H152KBN	C.CAPACITOR CH 50V 1500P	1	
C434	ECEV1EV4R7Q	E.CAPACITOR CH 25V 4.7U	1	
C435	ECUM1H103KBN	C.CAPACITOR CH 50V 0.01U	1	
C436,37	ECUM1E104ZFN	C.CAPACITOR CH 25V 0.1U	2	
C438	ECEV0JV330Q	E.CAPACITOR CH6.3V 33U	1	
C439,40	ECUM1E104ZFN	C.CAPACITOR CH 25V 0.1U	2	
C441	ECEV0JV330Q	E.CAPACITOR CH6.3V 33U	1	
C442,43	ECUM1E104ZFN	C.CAPACITOR CH 25V 0.1U	2	
C444	ECUM1H390JCN	C.CAPACITOR CH 50V 39P	1	
C445	ECUM1H080DCN	C.CAPACITOR CH 50V 8P	1	
C446	ECUM1H181JCN	C.CAPACITOR CH 50V 180P	1	
C447,48	ECUM1E104ZFN	C.CAPACITOR CH 25V 0.1U	2	
C450	ECEV1CV470Q	E.CAPACITOR CH 16V 47U	1	
C451	ECEV0JV330Q	E.CAPACITOR CH6.3V 33U	1	
C452	ECUM1E104ZFN	C.CAPACITOR CH 25V 0.1U	1	
C453	ECUM1H470JCN	C.CAPACITOR CH 50V 47P	1	
C454	ECEV0JV330Q	E.CAPACITOR CH6.3V 33U	1	
C455-57	ECUM1E104ZFN	C.CAPACITOR CH 25V 0.1U	3	
C458	ECEV1HV010Q	E.CAPACITOR CH 50V 1U	1	
C459,60	ECUM1E104ZFN	C.CAPACITOR CH 25V 0.1U	2	
C461	ECEV0JV330Q	E.CAPACITOR CH6.3V 33U	1	
C462,63	ECUM1H103KBN	C.CAPACITOR CH 50V 0.01U	2	
C464-70	ECUM1E104ZFN	C.CAPACITOR CH 25V 0.1U	7	
C472	ECUM1E104ZFN	C.CAPACITOR CH 25V 0.1U	1	
C473	ECEV0JV330Q	E.CAPACITOR CH6.3V 33U	1	
C474,75	ECUM1E104ZFN	C.CAPACITOR CH 25V 0.1U	2	
C476	ECEV0JV330Q	E.CAPACITOR CH6.3V 33U	1	
C477	ECUM1E104ZFN	C.CAPACITOR CH 25V 0.1U	1	
C478	ECEV0JV330Q	E.CAPACITOR CH6.3V 33U	1	
C479	ECUM1E104ZFN	C.CAPACITOR CH 25V 0.1U	1	
C480	ECUX1E104KBN	C.CAPACITOR CH 25V 0.1U	1	
C481	ECUM1H330JCN	C.CAPACITOR CH 50V 33P	1	
C482	ECUM1H271JCN	C.CAPACITOR CH 50V 270P	1	
C483	ECUM1H220JCN	C.CAPACITOR CH 50V 22P	1	
C484	ECUM1H680JCN	C.CAPACITOR CH 50V 68P	1	
C485	ECUM1H070DCN	C.CAPACITOR CH 50V 7P	1	
C486	ECUM1H121JCN	C.CAPACITOR CH 50V 120P	1	
C487,88	ECUM1H100DCN	C.CAPACITOR CH 50V 10P	2	
C489	ECUM1H330JCN	C.CAPACITOR CH 50V 33P	1	
C490-92	ECUX1E104KBN	C.CAPACITOR CH 25V 0.1U	3	
C493,94	ECUM1E104ZFN	C.CAPACITOR CH 25V 0.1U	2	
C496	ECUX1E104KBN	C.CAPACITOR CH 25V 0.1U	1	
C497,98	ECUM1E104ZFN	C.CAPACITOR CH 25V 0.1U	2	
C499	ECUM1H151JCN	C.CAPACITOR CH 50V 150P	1	
C501	ECEV0JV330Q	E.CAPACITOR CH6.3V 33U	1	

Ref.No.	Part No.	Part Name & Description	Pcs	Remarks
C502	ECUM1E104ZFN	C.CAPACITOR CH 25V 0.1U	1	
C503	ECEV0JV330Q	E.CAPACITOR CH6.3V 33U	1	
C504	ECUM1E104ZFN	C.CAPACITOR CH 25V 0.1U	1	
C505	ECEV1CV100Q	E.CAPACITOR CH 16V 10U	1	
C506	ECUM1E104ZFN	C.CAPACITOR CH 25V 0.1U	1	
C507	ECEV1CV100Q	E.CAPACITOR CH 16V 10U	1	
C508	ECUM1E104ZFN	C.CAPACITOR CH 25V 0.1U	1	
C509	ECUM1H121JCN	C.CAPACITOR CH 50V 120P	1	
C510	ECUM1E104ZFN	C.CAPACITOR CH 25V 0.1U	1	
C511	ECUX1H102JCN	C.CAPACITOR CH 50V 1000P	1	
C512	ECUM1H221JCN	C.CAPACITOR CH 50V 220P	1	
C513	ECUX1H681JCN	C.CAPACITOR CH 50V 680P	1	
C514,15	ECUM1E104ZFN	C.CAPACITOR CH 25V 0.1U	2	
C516	ECUM1H560JCN	C.CAPACITOR CH 50V 56P	1	
C518	ECUX1E104KBN	C.CAPACITOR CH 25V 0.1U	1	
C519	ECUM1E104ZFN	C.CAPACITOR CH 25V 0.1U	1	
C520	ECUM1H103KBN	C.CAPACITOR CH 50V 0.01U	1	
C522	ECEV1CV470Q	E.CAPACITOR CH 16V 47U	1	
C523	ECUM1H220JCN	C.CAPACITOR CH 50V 22P	1	
C524	ECUM1H820JCN	C.CAPACITOR CH 50V 82P	1	
C525	ECUM1H080DCN	C.CAPACITOR CH 50V 8P	1	
C526	ECEV1CV470Q	E.CAPACITOR CH 16V 47U	1	
C527	ECUM1H103KBN	C.CAPACITOR CH 50V 0.01U	1	
C528	ECUM1H470JCN	C.CAPACITOR CH 50V 47P	1	
C529	ECUM1H060DCN	C.CAPACITOR CH 50V 6P	1	
C531	ECUM1E104ZFN	C.CAPACITOR CH 25V 0.1U	1	
C532	ECUX1E104KBN	C.CAPACITOR CH 25V 0.1U	1	
C534	ECUM1H103KBN	C.CAPACITOR CH 50V 0.01U	1	
C536	ECUM1H220JCN	C.CAPACITOR CH 50V 22P	1	
C537	ECUM1H820JCN	C.CAPACITOR CH 50V 82P	1	
C538	ECUM1H060DCN	C.CAPACITOR CH 50V 6P	1	
C539	ECUM1H080DCN	C.CAPACITOR CH 50V 8P	1	
C540	ECUM1H470JCN	C.CAPACITOR CH 50V 47P	1	
C541	ECEV1HV4R7Q	E.CAPACITOR CH 50V 4.7U	1	
C542	ECUX1E104KBN	C.CAPACITOR CH 25V 0.1U	1	
C545	ECUM1H120JCN	C.CAPACITOR CH 50V 12P	1	
C550	ECUM1H101JCN	C.CAPACITOR CH 50V 100P	1	
C551	ECUM1E104ZFN	C.CAPACITOR CH 25V 0.1U	1	
C552	ECEV0JV330Q	E.CAPACITOR CH6.3V 33U	1	
C553	ECUM1E104ZFN	C.CAPACITOR CH 25V 0.1U	1	
C554	ECEV1CV470Q	E.CAPACITOR CH 16V 47U	1	
C555	ECUM1E104ZFN	C.CAPACITOR CH 25V 0.1U	1	
C556	ECUM1H390JCN	C.CAPACITOR CH 50V 39P	1	
C557	ECUM1H181JCN	C.CAPACITOR CH 50V 180P	1	
C558,59	ECUM1E104ZFN	C.CAPACITOR CH 25V 0.1U	2	
C561	ECUM1H080DCN	C.CAPACITOR CH 50V 8P	1	
C562,63	ECUM1H103KBN	C.CAPACITOR CH 50V 0.01U	2	
C565,66	ECUM1H103KBN	C.CAPACITOR CH 50V 0.01U	2	
C567	ECUM1H820JCN	C.CAPACITOR CH 50V 82P	1	
C568	ECUM1H103KBN	C.CAPACITOR CH 50V 0.01U	1	
C569	ECUM1E104ZFN	C.CAPACITOR CH 25V 0.1U	1	
C570	ECEV0JV330Q	E.CAPACITOR CH6.3V 33U	1	
C571-73	ECUM1E104ZFN	C.CAPACITOR CH 25V 0.1U	3	
C601	ECUM1H470JCN	C.CAPACITOR CH 50V 47P	1	
C602	ECEV0JV330Q	E.CAPACITOR CH6.3V 33U	1	
C603	ECUM1E104ZFN	C.CAPACITOR CH 25V 0.1U	1	
C604	ECEV0JV330Q	E.CAPACITOR CH6.3V 33U	1	
C605	ECUM1E104ZFN	C.CAPACITOR CH 25V 0.1U	1	
C606	ECUM1H470JCN	C.CAPACITOR CH 50V 47P	1	
C607	ECUM1E104ZFN	C.CAPACITOR CH 25V 0.1U	1	
C608	ECUM1H331JCN	C.CAPACITOR CH 50V 330P	1	
C609	ECUM1H820JCN	C.CAPACITOR CH 50V 82P	1	
C610	ECUM1E104ZFN	C.CAPACITOR CH 25V 0.1U	1	
C612	ECUM1H470JCN	C.CAPACITOR CH 50V 47P	1	
C613	ECEV1HN010Q	E.CAPACITOR CH 50V 1U	1	
C614	ECUX1H102JCN	C.CAPACITOR CH 50V 1000P	1	
C615	ECUM1E104ZFN	C.CAPACITOR CH 25V 0.1U	1	
C616	ECUM1H331JCN	C.CAPACITOR CH 50V 330P	1	
C617	ECUM1E104ZFN	C.CAPACITOR CH 25V 0.1U	1	
C618	ECUX1H102JCN	C.CAPACITOR CH 50V 1000P	1	
C619	ECUM1E104ZFN	C.CAPACITOR CH 25V 0.1U	1	
C621	ECEV1HN010Q	E.CAPACITOR CH 50V 1U	1	
C622,23	ECUM1E104ZFN	C.CAPACITOR CH 25V 0.1U	2	
C624,25	ECUM1H103KBN	C.CAPACITOR CH 50V 0.01U	2	
C626	ECUX1H102JCN	C.CAPACITOR CH 50V 1000P	1	

Ref.No.	Part No.	Part Name & Description	Pcs	Remarks
C627	ECUM1E104ZFN	C.CAPACITOR CH 25V 0.1U	1	
C629	ECUM1H121JCN	C.CAPACITOR CH 50V 120P	1	
C651	ECEV0JV330Q	E.CAPACITOR CH6.3V 33U	1	
C652,53	ECUM1E104ZFN	C.CAPACITOR CH 25V 0.1U	2	
C654	ECEV0JV330Q	E.CAPACITOR CH6.3V 33U	1	
C655	ECUM1E104ZFN	C.CAPACITOR CH 25V 0.1U	1	
C701	ECUM1E104ZFN	C.CAPACITOR CH 25V 0.1U	1	
C702,03	ECEV0JV330Q	E.CAPACITOR CH6.3V 33U	2	
C704	ECUM1E104ZFN	C.CAPACITOR CH 25V 0.1U	1	
C705	ECEV0JV330Q	E.CAPACITOR CH6.3V 33U	1	
C706	ECUM1E104ZFN	C.CAPACITOR CH 25V 0.1U	1	
C707	ECEV0JV330Q	E.CAPACITOR CH6.3V 33U	1	
C708,09	ECUM1E104ZFN	C.CAPACITOR CH 25V 0.1U	2	
C710	ECUM1H010CCN	C.CAPACITOR CH 50V 1P	1	
C712-14	ECUM1E104ZFN	C.CAPACITOR CH 25V 0.1U	3	
C715	ECUX1E104KBN	C.CAPACITOR CH 25V 0.1U	1	
C716	ECUM1E104ZFN	C.CAPACITOR CH 25V 0.1U	1	
C717	ECEV0JV330Q	E.CAPACITOR CH6.3V 33U	1	
C718	ECUM1E104ZFN	C.CAPACITOR CH 25V 0.1U	1	
C719	ECEV0JV330Q	E.CAPACITOR CH6.3V 33U	1	
C720,21	ECUM1E104ZFN	C.CAPACITOR CH 25V 0.1U	2	
C722	ECEV0JV330Q	E.CAPACITOR CH6.3V 33U	1	
C723	ECUM1E104ZFN	C.CAPACITOR CH 25V 0.1U	1	
C724	ECEV0JV330Q	E.CAPACITOR CH6.3V 33U	1	
C725	ECUM1E104ZFN	C.CAPACITOR CH 25V 0.1U	1	
C726	ECEV0JV330Q	E.CAPACITOR CH6.3V 33U	1	
C727	ECUM1E104ZFN	C.CAPACITOR CH 25V 0.1U	1	
C728	ECUX1E104KBN	C.CAPACITOR CH 25V 0.1U	1	
C730	ECEV1CV470Q	E.CAPACITOR CH 16V 47U	1	
C731	ECUX1E104KBN	C.CAPACITOR CH 25V 0.1U	1	
C732	ECUM1H331JCN	C.CAPACITOR CH 50V 330P	1	
C733	ECUM1H470JCN	C.CAPACITOR CH 50V 47P	1	
C734	ECEV0JV330Q	E.CAPACITOR CH6.3V 33U	1	
C735-40	ECUM1E104ZFN	C.CAPACITOR CH 25V 0.1U	6	
C751	ECUM1E104ZFN	C.CAPACITOR CH 25V 0.1U	1	
C752,53	ECEV0JV330Q	E.CAPACITOR CH6.3V 33U	2	
C754	ECUM1E104ZFN	C.CAPACITOR CH 25V 0.1U	1	
C755	ECEV0JV330Q	E.CAPACITOR CH6.3V 33U	1	
C756	ECUM1E104ZFN	C.CAPACITOR CH 25V 0.1U	1	
C757	ECEV0JV330Q	E.CAPACITOR CH6.3V 33U	1	
C758,59	ECUM1E104ZFN	C.CAPACITOR CH 25V 0.1U	2	
C762-66	ECUM1E104ZFN	C.CAPACITOR CH 25V 0.1U	5	
C768	ECUM1E104ZFN	C.CAPACITOR CH 25V 0.1U	1	
C769	ECEV0JV330Q	E.CAPACITOR CH6.3V 33U	1	
C770,71	ECUM1E104ZFN	C.CAPACITOR CH 25V 0.1U	2	
C772	ECEV0JV330Q	E.CAPACITOR CH6.3V 33U	1	
C773	ECUM1E104ZFN	C.CAPACITOR CH 25V 0.1U	1	
C774	ECEV0JV330Q	E.CAPACITOR CH6.3V 33U	1	
C775	ECUM1E104ZFN	C.CAPACITOR CH 25V 0.1U	1	
C776	ECEV1CV100Q	E.CAPACITOR CH 16V 10U	1	
C777	ECUM1E104ZFN	C.CAPACITOR CH 25V 0.1U	1	
C778	ECUX1E104KBN	C.CAPACITOR CH 25V 0.1U	1	
C780	ECEV1CV470Q	E.CAPACITOR CH 16V 47U	1	
C781	ECUX1E104KBN	C.CAPACITOR CH 25V 0.1U	1	
C782	ECUM1H331JCN	C.CAPACITOR CH 50V 330P	1	
C783	ECUM1H470JCN	C.CAPACITOR CH 50V 47P	1	
C784	ECEV0JV330Q	E.CAPACITOR CH6.3V 33U	1	
C785-87	ECUM1E104ZFN	C.CAPACITOR CH 25V 0.1U	3	
C790	ECUM1H080DCN	C.CAPACITOR CH 50V 8P	1	
C791	ECUM1H470JCN	C.CAPACITOR CH 50V 47P	1	
C792	ECEV1CV100Q	E.CAPACITOR CH 16V 10U	1	
C801	ECUM1E104ZFN	C.CAPACITOR CH 25V 0.1U	1	
C802,03	ECEV0JV330Q	E.CAPACITOR CH6.3V 33U	2	
C804	ECUM1E104ZFN	C.CAPACITOR CH 25V 0.1U	1	
C805	ECEV0JV330Q	E.CAPACITOR CH6.3V 33U	1	
C806	ECUM1E104ZFN	C.CAPACITOR CH 25V 0.1U	1	
C807	ECEV0JV330Q	E.CAPACITOR CH6.3V 33U	1	
C808,09	ECUM1E104ZFN	C.CAPACITOR CH 25V 0.1U	2	
C812-16	ECUM1E104ZFN	C.CAPACITOR CH 25V 0.1U	5	
C818	ECUM1E104ZFN	C.CAPACITOR CH 25V 0.1U	1	
C819	ECEV0JV330Q	E.CAPACITOR CH6.3V 33U	1	
C820,21	ECUM1E104ZFN	C.CAPACITOR CH 25V 0.1U	2	
C822	ECEV0JV330Q	E.CAPACITOR CH6.3V 33U	1	
C823	ECUM1E104ZFN	C.CAPACITOR CH 25V 0.1U	1	
C824	ECEV0JV330Q	E.CAPACITOR CH6.3V 33U	1	

Ref.No.	Part No.	Part Name & Description	Pcs	Remarks
C825	ECUM1E104ZFN	C.CAPACITOR CH 25V 0.1U	1	
C826	ECEV1CV100Q	E.CAPACITOR CH 16V 10U	1	
C827	ECUM1E104ZFN	C.CAPACITOR CH 25V 0.1U	1	
C828	ECUX1E104KBN	C.CAPACITOR CH 25V 0.1U	1	
C830	ECEV1CV470Q	E.CAPACITOR CH 16V 47U	1	
C831	ECUX1E104KBN	C.CAPACITOR CH 25V 0.1U	1	
C832	ECUM1H331JCN	C.CAPACITOR CH 50V 330P	1	
C833	ECUM1H470JCN	C.CAPACITOR CH 50V 47P	1	
C834	ECEV0JV330Q	E.CAPACITOR CH6.3V 33U	1	
C835-37	ECUM1E104ZFN	C.CAPACITOR CH 25V 0.1U	3	
C840	ECUM1H080DCN	C.CAPACITOR CH 50V 8P	1	
C841	ECUM1H470JCN	C.CAPACITOR CH 50V 47P	1	
C842	ECEV1CV100Q	E.CAPACITOR CH 16V 10U	1	
C851-60	ECUM1E104ZFN	C.CAPACITOR CH 25V 0.1U	10	
C881-96	ECUM1E104ZFN	C.CAPACITOR CH 25V 0.1U	16	
C901-03	ECUM1E104ZFN	C.CAPACITOR CH 25V 0.1U	3	
C905-17	ECUM1E104ZFN	C.CAPACITOR CH 25V 0.1U	13	
C919	ECEV0JV330Q	E.CAPACITOR CH6.3V 33U	1	
C920	ECUM1E104ZFN	C.CAPACITOR CH 25V 0.1U	1	
C921	ECEV0JV330Q	E.CAPACITOR CH6.3V 33U	1	
C922-27	ECUM1E104ZFN	C.CAPACITOR CH 25V 0.1U	6	
C928	ECEV0JV330Q	E.CAPACITOR CH6.3V 33U	1	
C929	ECEV1CV100Q	E.CAPACITOR CH 16V 10U	1	
C930,31	ECUM1E104ZFN	C.CAPACITOR CH 25V 0.1U	2	
C932	ECEV0JV330Q	E.CAPACITOR CH6.3V 33U	1	
C934	ECEV1EV4R7Q	E.CAPACITOR CH 25V 4.7U	1	
C935	ECUM1H470JCN	C.CAPACITOR CH 50V 47P	1	
C936	ECEV0JV330Q	E.CAPACITOR CH6.3V 33U	1	
C937	ECUM1H560JCN	C.CAPACITOR CH 50V 56P	1	
C938	ECUM1H180JCN	C.CAPACITOR CH 50V 18P	1	
C939	ECUM1H121JCN	C.CAPACITOR CH 50V 120P	1	
C940,41	ECUM1E104ZFN	C.CAPACITOR CH 25V 0.1U	2	
C942	ECEV0JV330Q	E.CAPACITOR CH6.3V 33U	1	
C943,44	ECUM1E104ZFN	C.CAPACITOR CH 25V 0.1U	2	
C951	ECUM1H101JCN	C.CAPACITOR CH 50V 100P	1	
C952-56	ECUM1E104ZFN	C.CAPACITOR CH 25V 0.1U	5	
C957	ECUM1H103KBN	C.CAPACITOR CH 50V 0.01U	1	
C958	ECUX1E104KBN	C.CAPACITOR CH 25V 0.1U	1	
C959	ECEV1HNR47Q	E.CAPACITOR CH 50V 0.47U	1	
C960,61	ECUX1E104KBN	C.CAPACITOR CH 25V 0.1U	2	
C962	ECUM1E104ZFN	C.CAPACITOR CH 25V 0.1U	1	
C963	ECEV0JV330Q	E.CAPACITOR CH6.3V 33U	1	
C964,65	ECUM1E104ZFN	C.CAPACITOR CH 25V 0.1U	2	
C966	ECEV0JV330Q	E.CAPACITOR CH6.3V 33U	1	
C967,68	ECUM1E104ZFN	C.CAPACITOR CH 25V 0.1U	2	
C973	ECEV1CV470Q	E.CAPACITOR CH 16V 47U	1	
C974	ECUM1E104ZFN	C.CAPACITOR CH 25V 0.1U	1	
C975	ECEV1CV470Q	E.CAPACITOR CH 16V 47U	1	
C976	ECUM1E104ZFN	C.CAPACITOR CH 25V 0.1U	1	
C980	ECEV0JV330Q	E.CAPACITOR CH6.3V 33U	1	
C981,82	ECUM1E104ZFN	C.CAPACITOR CH 25V 0.1U	2	
C983	ECEV0JV330Q	E.CAPACITOR CH6.3V 33U	1	
C984,85	ECUM1E104ZFN	C.CAPACITOR CH 25V 0.1U	2	
D301,02	MA152K	DIODE	2	
D351,52	MA152K	DIODE	2	
D401	MA152WK	DIODE	1	
D551	MA152WK	DIODE	1	
D601	MA335	DIODE	1	
D602	MA152WA	DIODE	1	
D603	MA152K	DIODE	1	
D701,02	MA152K	DIODE	2	
D751,52	MA152K	DIODE	2	
D801,02	MA152K	DIODE	2	
D901	MA152K	DIODE	1	
FL101	VLF1016A223	FILTER	1	
FL103	VLF1016A223	FILTER	1	
FL301	VLF1294	FILTER	1	
FL351	VLF1016A223	FILTER	1	
FL451	VLF1016A223	FILTER	1	
FL601,02	VLF1016A223	FILTER	2	
FL701	VLF1294	FILTER	1	
FL702	VLF1016A223	FILTER	1	
FL751	VLF1295	FILTER	1	

Ref.No.	Part No.	Part Name & Description	Pcs	Remarks
FL801	VLF1295	FILTER	1	
FL851,52	VLF1016A223	FILTER	2	
FL911	VLF1016A223	FILTER	1	
FL951	VLF1294	FILTER	1	
FL981,82	VLF1016A223	FILTER	2	
IC101	AN78N09	IC	1	
IC102	AN78N05	IC	1	
IC103	AN79N09	IC	1	
IC104	AN79N05	IC	1	
IC151-54	MC10H125M	IC	4	
IC156	74F244SJ	IC	1	
IC201	VSI2496	IC	1	
IC204	74F245SJ	IC	1	
IC207,08	UPD71055GB	IC	2	
IC209,10	SN74S1051NS	IC	2	
IC251	VSI2153A	IC	1	
IC252	VSI2154	IC	1	
IC253	T74HCT541AF	IC	1	
IC254	T74HCT374AF	IC	1	
IC255	74F574SJ	IC	1	
IC259	T74HCT374AF	IC	1	
IC301	EL2082CS	IC	1	
IC302	NJM082BM	IC	1	
IC303	DAC10GS	IC	1	
IC351	AD818AR	IC	1	
IC352	NJM084M	IC	1	
IC353	CXD1175AM	IC	1	
IC354,55	NJM78L05UA	IC	2	
IC356	NJM79L05UA	IC	1	
IC401	UPC1862GS	IC	1	
IC402,03	NJM78L05UA	IC	2	
IC404	NJM79L05UA	IC	1	
IC405	AN91A12S	IC	1	
IC406	TC4W53F	IC	1	
IC407	MC74HC00AF	IC	1	
IC450	AD8047AR	IC	1	
IC451	UPD6486GF3BA	IC	1	
IC452,53	UPD42280G3	IC	2	
IC454	NJM78L05UA	IC	1	
IC455	NJM79L05UA	IC	1	
IC458	AD8047AR	IC	1	
IC460	UPD42280G3	IC	1	
IC461	MB40760PF	IC	1	
IC462	VSI2716	IC	1	
IC463	NJM78L05UA	IC	1	
IC501	SN74LS221NS	IC	1	
IC502	MM74HC221AM	IC	1	
IC503	UPD65013BC16	IC	1	
IC504,05	NJM1496M	IC	2	
IC507	MC74HC4053F	IC	1	
IC508	MC74HC04AF	IC	1	
IC509,10	NJM082BM	IC	2	
IC511	NJM78L05UA	IC	1	
IC512	NJM79L05UA	IC	1	
IC517	NJM78L05UA	IC	1	
IC518	NJM79L05UA	IC	1	
IC551	MC14538BF	IC	1	
IC552	AN91A12S	IC	1	
IC553	NJM78L05UA	IC	1	
IC554	NJM79L05UA	IC	1	
IC555	MN53015VZW	IC	1	
IC601	SN74LS221NS	IC	1	
IC602	MC74HC00AF	IC	1	
IC603	NJM082BM	IC	1	
IC604	MC74HC74AF	IC	1	
IC605	TC4S584F	IC	1	
IC606	TC4W53F	IC	1	
IC607	MC74HC244AF	IC	1	
IC608	SN74LS221NS	IC	1	
IC701	MC74HC4053F	IC	1	
IC702	AD848JR	IC	1	
IC703	NJM084M	IC	1	
IC704	CXD1175AM	IC	1	
IC705,06	NJM78L05UA	IC	2	

Ref.No.	Part No.	Part Name & Description	Pcs	Remarks
IC707	NJM79L05UA	IC	1	
IC751	MC74HC4053F	IC	1	
IC752	AD848JR	IC	1	
IC753	NJM084M	IC	1	
IC754	MB40568PF	IC	1	
IC755,56	NJM78L05UA	IC	2	
IC757	NJM79L05UA	IC	1	
IC758	AN78N09	IC	1	
IC759	T74HCT541AF	IC	1	
IC801	MC74HC4053F	IC	1	
IC802	AD848JR	IC	1	
IC803	NJM084M	IC	1	
IC804	MB40568PF	IC	1	
IC805,06	NJM78L05UA	IC	2	
IC807	NJM79L05UA	IC	1	
IC808	AN78N09	IC	1	
IC809	T74HCT541AF	IC	1	
IC851	T160G70-1601	IC	1	
IC852,53	UPD42280G3	IC	2	
IC901-03	74F244SJ	IC	3	
IC904	NJM78L05UA	IC	1	
IC905	AN3296S	IC	1	
IC911	TC7W125FU	IC	1	
IC912	MC68HC68VBI	IC	1	
IC913	NJM78L05UA	IC	1	
IC951	T74HCT374AF	IC	1	
IC952	VSI2497	IC	1	
IC953	TC7W125FU	IC	1	
IC954	MB40768PF	IC	1	
IC955,56	NJM78L05UA	IC	2	
IC957	NJM79L05UA	IC	1	
IC958	AD8047AR	IC	1	
IC959	MC74HC4053F	IC	1	
IC981	T160G41-1437	IC	1	
IC982,83	UPD42280G3	IC	2	
IC984	VSI2679	IC	1	
IC985,86	74F244SJ	IC	2	
L1,L2	VLP0133	COIL	2	
L101,02	VLP0133	COIL	2	
L301-04	VLQ0319K101	COIL 100UH	4	
L351	VLQ0163J101	COIL 100UH	1	
L352	VLQ0319K101	COIL 100UH	1	
L401	VLQ0163J150	COIL 15UH	1	
L402-05	VLQ0319K100	COIL 10UH	4	
L406	VLQ0133J471	COIL 470UH	1	
L407	VLQ0319K101	COIL 100UH	1	
L451	VLQ0319K101	COIL 100UH	1	
L452	VLQ0319K100	COIL 10UH	1	
L454	VLQ0163J270	COIL 27UH	1	
L455	VLQ0163J6R8	COIL 6.8UH	1	
L456	VLQ0163J5R6	COIL 5.6UH	1	
L457	VLQ0319K101	COIL 100UH	1	
L458,59	VLQ0163J2R2	COIL 2.2UH	2	
L501-03	VLQ0319K101	COIL 100UH	3	
L505,06	VLQ0163J680	COIL 68UH	2	
L507	VLQ0319K101	COIL 100UH	1	
L553	VLQ0133J471	COIL 470UH	1	
L601	VLQ0163J3R3	COIL 3.3UH	1	
L651,52	VLQ0319K101	COIL 100UH	2	
L703	VLQ0319K101	COIL 100UH	1	
L704	VLQ0133J821	COIL 820UH	1	
L754	VLQ0133J821	COIL 820UH	1	
L804	VLQ0133J821	COIL 820UH	1	
L911	VLQ0319K101	COIL 100UH	1	
L951	VLQ0163J470	COIL 47UH	1	
P1,P2	VJP3454B096	CONNECTOR (MALE)	2	
Q301	2SB709A-R	TRANSISTOR	1	
Q302,03	2SD601A-R	TRANSISTOR	2	
Q351	2SD601A-R	TRANSISTOR	1	
Q352	2SB709A-R	TRANSISTOR	1	
Q353	2SK198-R	TRANSISTOR	1	
Q401	2SD601A-R	TRANSISTOR	1	

Ref.No.	Part No.	Part Name & Description	Pcs	Remarks
Q404	2SB709A-R	TRANSISTOR	1	
Q405,06	2SD601A-R	TRANSISTOR	2	
Q452	2SD601A-R	TRANSISTOR	1	
Q454	2SB709A-R	TRANSISTOR	1	
Q455	2SD601A-R	TRANSISTOR	1	
Q501,02	2SD601A-R	TRANSISTOR	2	
Q503	2SB709A-R	TRANSISTOR	1	
Q504,05	2SD601A-R	TRANSISTOR	2	
Q507,08	2SD601A-R	TRANSISTOR	2	
Q509	2SB709A-R	TRANSISTOR	1	
Q510,11	2SD601A-R	TRANSISTOR	2	
Q518	2SD601A-R	TRANSISTOR	1	
Q601	2SC3757-R	TRANSISTOR	1	
Q602,03	2SA1226E34	TRANSISTOR	2	
Q604	2SC3757-R	TRANSISTOR	1	
Q651	2SB709A-R	TRANSISTOR	1	
Q652	2SD601A-R	TRANSISTOR	1	
Q653	2SB709A-R	TRANSISTOR	1	
Q654	2SD601A-R	TRANSISTOR	1	
Q655	XN1213	TRANSISTOR-RESISTOR	1	
Q656	2SB709A-R	TRANSISTOR	1	
Q657	2SD601A-R	TRANSISTOR	1	
Q658	2SC3757-R	TRANSISTOR	1	
Q701	2SD601A-R	TRANSISTOR	1	
Q702	2SB709A-R	TRANSISTOR	1	
Q703	2SD601A-R	TRANSISTOR	1	
Q704	2SB709A-R	TRANSISTOR	1	
Q705	2SK198-R	TRANSISTOR	1	
Q706	2SB709A-R	TRANSISTOR	1	
Q707	2SD601A-R	TRANSISTOR	1	
Q751	2SD601A-R	TRANSISTOR	1	
Q752	2SB709A-R	TRANSISTOR	1	
Q753	2SD601A-R	TRANSISTOR	1	
Q754	2SB709A-R	TRANSISTOR	1	
Q755	2SK198-R	TRANSISTOR	1	
Q756	2SD601A-R	TRANSISTOR	1	
Q801	2SD601A-R	TRANSISTOR	1	
Q802	2SB709A-R	TRANSISTOR	1	
Q803	2SD601A-R	TRANSISTOR	1	
Q804	2SB709A-R	TRANSISTOR	1	
Q805	2SK198-R	TRANSISTOR	1	
Q806	2SD601A-R	TRANSISTOR	1	
Q901,02	2SD601A-R	TRANSISTOR	2	
Q951	2SD601A-R	TRANSISTOR	1	
Q952	2SB709A-R	TRANSISTOR	1	
Q953	2SD601A-R	TRANSISTOR	1	
Q954	2SB709A-R	TRANSISTOR	1	
Q955	2SC3757-R	TRANSISTOR	1	
Q956	2SD601A-R	TRANSISTOR	1	
Q957	2SB709A-R	TRANSISTOR	1	
QR201	MUN2212	TRANSISTOR-RESISTOR	1	
QR701,02	MUN2213	TRANSISTOR-RESISTOR	2	
QR751	MUN2213	TRANSISTOR-RESISTOR	1	
QR801	MUN2213	TRANSISTOR-RESISTOR	1	
R7-34	ERJ6GEY0R00	M.RESISTOR CH 1/10W 0	28	
R37-53	ERJ6GEY0R00	M.RESISTOR CH 1/10W 0	17	
R56-81	ERJ6GEY0R00	M.RESISTOR CH 1/10W 0	26	
R98	ERJ6GEYG101	M.RESISTOR CH 1/10W 100	1	
R99	ERJ6GEY0R00	M.RESISTOR CH 1/10W 0	1	
R101-08	ERJ6GEYF472	M.RESISTOR CH 1/10W 4.7K	8	
R111	ERJ6GEYG470	M.RESISTOR CH 1/10W 47	1	
R112	ERJ6GEYG222	M.RESISTOR CH 1/10W 2.2K	1	
R113	ERJ6GEYG102	M.RESISTOR CH 1/10W 1K	1	
R114	ERJ6GEY0R00	M.RESISTOR CH 1/10W 0	1	
R115	ERJ6GEYG122	M.RESISTOR CH 1/10W 1.2K	1	
R116	ERJ6GEYG102	M.RESISTOR CH 1/10W 1K	1	
R117,18	ERJ6GEYG222	M.RESISTOR CH 1/10W 2.2K	2	
R119,20	ERJ6GEYG331	M.RESISTOR CH 1/10W 330	2	
R121	ERJ6GEYG222	M.RESISTOR CH 1/10W 2.2K	1	
R122	ERJ6GEYG103	M.RESISTOR CH 1/10W 10K	1	
R123	ERJ6GEYG221	M.RESISTOR CH 1/10W 220	1	
R124	ERJ6GEYG102	M.RESISTOR CH 1/10W 1K	1	
R125,26	ERJ6GEYG103	M.RESISTOR CH 1/10W 10K	2	

Ref.No.	Part No.	Part Name & Description	Pcs	Remarks
R127	ERJ6GEYG102	M.RESISTOR CH 1/10W 1K	1	
R128	ERJ6GEYG222	M.RESISTOR CH 1/10W 2.2K	1	
R129	ERJ6GEYG102	M.RESISTOR CH 1/10W 1K	1	
R130	ERJ6GEYG222	M.RESISTOR CH 1/10W 2.2K	1	
R131-33	ERJ6GEYG102	M.RESISTOR CH 1/10W 1K	3	
R134	ERJ6GEYG272	M.RESISTOR CH 1/10W 2.7K	1	
R135	ERJ6GEYG103	M.RESISTOR CH 1/10W 10K	1	
R151-62	ERJ6GEYG101	M.RESISTOR CH 1/10W 100	12	
R163	ERJ6GEY0R00	M.RESISTOR CH 1/10W 0	1	
R165,66	ERJ6GEYG101	M.RESISTOR CH 1/10W 100	2	
R168,69	ERJ6GEYG103	M.RESISTOR CH 1/10W 10K	2	
R172	ERJ6GEYG103	M.RESISTOR CH 1/10W 10K	1	
R173	ERJ6GEY0R00	M.RESISTOR CH 1/10W 0	1	
R175	ERJ6GEY0R00	M.RESISTOR CH 1/10W 0	1	
R177-80	ERJ6GEYG391	M.RESISTOR CH 1/10W 390	4	
R181	ERJ6GEYG332	M.RESISTOR CH 1/10W 3.3K	1	
R182-91	ERJ6GEYG391	M.RESISTOR CH 1/10W 390	10	
R192	ERJ6GEYG332	M.RESISTOR CH 1/10W 3.3K	1	
R193,94	ERJ6GEYG101	M.RESISTOR CH 1/10W 100	2	
R201,02	ERJ6GEYG103	M.RESISTOR CH 1/10W 10K	2	
R208	ERJ6GEYG103	M.RESISTOR CH 1/10W 10K	1	
R214,15	ERJ6GEYG101	M.RESISTOR CH 1/10W 100	2	
R216	ERJ6GEYG103	M.RESISTOR CH 1/10W 10K	1	
R219,20	ERJ6GEY0R00	M.RESISTOR CH 1/10W 0	2	
R221	ERJ6GEYG223	M.RESISTOR CH 1/10W 22K	1	
R222	ERJ6GEYF333	M.RESISTOR CH 1/10W 33K	1	
R223	ERJ6GEYG564	M.RESISTOR CH 1/10W 560K	1	
R224	ERJ6GEYG102	M.RESISTOR CH 1/10W 1K	1	
R225	ERJ6GEYG683	M.RESISTOR CH 1/10W 68K	1	
R226	ERJ6GEYG331	M.RESISTOR CH 1/10W 330	1	
R227	ERJ6GEYJ684	M.RESISTOR CH 1/10W 680K	1	
R228	ERJ6GEYG753	M.RESISTOR CH 1/10W 75	1	
R229	ERJ6GEYG104	M.RESISTOR CH 1/10W 100K	1	
R230	ERJ6GEYG103	M.RESISTOR CH 1/10W 10K	1	
R231	ERJ6GEYG682	M.REISITOR CH 1/10W 6.8K	1	
R232	ERJ6GEYG153	M.RESISTOR CH 1/10W 15K	1	
R233	ERJ6GEYF473	M.RESISTOR CH 1/10W 47K	1	
R251	ERJ6GEYG101	M.RESISTOR CH 1/10W 100	1	
R301	ERJ6GEYG562	M.RESISTOR CH 1/10W 5.6K	1	
R302	ERJ6GEYG102	M.RESISTOR CH 1/10W 1K	1	
R303	ERJ6GEYG101	M.RESISTOR CH 1/10W 100	1	
R304,05	ERJ6GEYG331	M.RESISTOR CH 1/10W 330	2	
R306,07	ERJ6GEYG102	M.RESISTOR CH 1/10W 1K	2	
R308	ERJ6GEYF561	M.RESISTOR CH 1/10W 560	1	
R309	ERJ6GEYG183	M.RESISTOR CH 1/10W 18K	1	
R310	ERJ6GEY0R00	M.RESISTOR CH 1/10W 0	1	
R311	ERJ6GEYG102	M.RESISTOR CH 1/10W 1K	1	
R312	ERJ6GEYG101	M.RESISTOR CH 1/10W 100	1	
R315,16	ERJ6GEYF822	M.RESISTOR CH 1/10W 8.2K	2	
R317	ERJ6GEY0R00	M.RESISTOR CH 1/10W 0	1	
R318	ERJ6GEYF333	M.RESISTOR CH 1/10W 33K	1	
R352	ERJ6GEYG101	M.RESISTOR CH 1/10W 100	1	
R354	ERJ6GEYG152	M.RESISTOR CH 1/10W 1.5K	1	
R355	ERJ6GEYF561	M.RESISTOR CH 1/10W 560	1	
R358	ERJ6GEYG122	M.RESISTOR CH 1/10W 1.2K	1	
R359	ERJ6GEYG101	M.RESISTOR CH 1/10W 100	1	
R360	ERJ6GEY0R00	M.RESISTOR CH 1/10W 0	1	
R361	ERJ6GEYG103	M.RESISTOR CH 1/10W 10K	1	
R362	ERJ6GEYG102	M.RESISTOR CH 1/10W 1K	1	
R363	ERJ6GEYG394	M.RESISTOR CH 1/10W 390K	1	
R364	ERJ6GEYG154	M.RESISTOR CH 1/10W 150K	1	
R365	ERJ6GEYG102	M.RESISTOR CH 1/10W 1K	1	
R366	ERJ6GEYG101	M.RESISTOR CH 1/10W 100	1	
R369	ERJ6GEYG101	M.RESISTOR CH 1/10W 100	1	
R370	ERJ6GEYG103	M.RESISTOR CH 1/10W 10K	1	
R371	ERJ6GEYG682	M.REISITOR CH 1/10W 6.8K	1	
R401	ERJ6GEYG681	M.RESISTOR CH 1/10W 680	1	
R402	ERJ6GEYG103	M.RESISTOR CH 1/10W 10K	1	
R403	ERJ6GEYG681	M.RESISTOR CH 1/10W 680	1	
R404	ERJ6GEYG103	M.RESISTOR CH 1/10W 10K	1	
R407	ERJ6GEYG105	M.RESISTOR CH 1/10W 1M	1	
R412	ERJ6GEYG102	M.RESISTOR CH 1/10W 1K	1	
R413	ERJ6GEYF333	M.RESISTOR CH 1/10W 33K	1	
R414	ERJ6GEYG103	M.RESISTOR CH 1/10W 10K	1	
R415	ERJ6GEYG221	M.RESISTOR CH 1/10W 220	1	

Ref.No.	Part No.	Part Name & Description	Pcs	Remarks
R416	ERJ6GEYF473	M.RESISTOR CH 1/10W 47K	1	
R417	ERJ6GEYG221	M.RESISTOR CH 1/10W 220	1	
R418	ERJ6GEYF473	M.RESISTOR CH 1/10W 47K	1	
R419	ERJ6GEYG104	M.RESISTOR CH 1/10W 100K	1	
R420	ERJ6GEYG272	M.RESISTOR CH 1/10W 2.7K	1	
R421	ERJ6GEYG271	M.RESISTOR CH 1/10W 270	1	
R422	ERJ6GEYG222	M.RESISTOR CH 1/10W 2.2K	1	
R423,24	ERJ6GEYG103	M.RESISTOR CH 1/10W 10K	2	
R425	ERJ6GEYG152	M.RESISTOR CH 1/10W 1.5K	1	
R426	ERJ6GEYF822	M.RESISTOR CH 1/10W 8.2K	1	
R427	ERDS2TJ392	C.RESISTOR 1/4W 3.9K	1	
R431	ERJ6GEY0R00	M.RESISTOR CH 1/10W 0	1	
R432	ERJ6GEYG102	M.RESISTOR CH 1/10W 1K	1	
R433	ERJ6GEYG222	M.RESISTOR CH 1/10W 2.2K	1	
R436	ERJ6GEYG224	M.RESISTOR CH 1/10W 220K	1	
R437	ERJ6GEYJ684	M.RESISTOR CH 1/10W 680K	1	
R438-40	ERJ6GEYG103	M.RESISTOR CH 1/10W 10K	3	
R441	ERJ6GEYG562	M.RESISTOR CH 1/10W 5.6K	1	
R452	ERJ6GEYG332	M.RESISTOR CH 1/10W 3.3K	1	
R453	ERJ6GEYG102	M.RESISTOR CH 1/10W 1K	1	
R454	ERJ6GEYG330	M.RESISTOR CH 1/10W 33	1	
R455,56	ERJ6GEYG102	M.RESISTOR CH 1/10W 1K	2	
R457-60	ERJ6GEY0R00	M.RESISTOR CH 1/10W 0	4	
R463	ERJ6GEY0R00	M.RESISTOR CH 1/10W 0	1	
R465	ERJ6GEY0R00	M.RESISTOR CH 1/10W 0	1	
R466	ERJ6RBD162	M.RESISTOR CH 1/10W 1.6K	1	
R468	ERJ6GEYG391	M.RESISTOR CH 1/10W 390	1	
R469	ERJ6GEYG103	M.RESISTOR CH 1/10W 10K	1	
R471	ERJ6GEYG102	M.RESISTOR CH 1/10W 1K	1	
R473	ERJ6GEYG331	M.RESISTOR CH 1/10W 330	1	
R474	ERJ6GEYG102	M.RESISTOR CH 1/10W 1K	1	
R475	ERJ6GEYG101	M.RESISTOR CH 1/10W 100	1	
R480	ERJ6GEYG101	M.RESISTOR CH 1/10W 100	1	
R481	ERJ6GEYG331	M.RESISTOR CH 1/10W 330	1	
R482	ERJ6GEYG103	M.RESISTOR CH 1/10W 10K	1	
R484-86	ERJ6GEYG101	M.RESISTOR CH 1/10W 100	3	
R492	ERJ6GEYG101	M.RESISTOR CH 1/10W 100	1	
R493	ERJ6GEYG821	M.RESISTOR CH 1/10W 820	1	
R494	ERJ6GEYG103	M.RESISTOR CH 1/10W 10K	1	
R495	ERJ6GEYG391	M.RESISTOR CH 1/10W 390	1	
R496,97	ERJ6GEYG101	M.RESISTOR CH 1/10W 100	2	
R498	ERJ6GEYG102	M.RESISTOR CH 1/10W 1K	1	
R499	ERJ6GEYG471	M.RESISTOR CH 1/10W 470	1	
R500	ERJ6GEYG272	M.RESISTOR CH 1/10W 2.7K	1	
R501	ERJ6GEYG183	M.RESISTOR CH 1/10W 18K	1	
R502	ERJ6GEYF333	M.RESISTOR CH 1/10W 33K	1	
R503	ERJ6GEYG223	M.RESISTOR CH 1/10W 22K	1	
R504	ERJ6GEYG471	M.RESISTOR CH 1/10W 470	1	
R505,06	ERJ6GEY0R00	M.RESISTOR CH 1/10W 0	2	
R510,11	ERJ6GEYG222	M.RESISTOR CH 1/10W 2.2K	2	
R512	ERJ6GEYG102	M.RESISTOR CH 1/10W 1K	1	
R513	ERJ6GEYF472	M.RESISTOR CH 1/10W 4.7K	1	
R514	ERJ6GEYG101	M.RESISTOR CH 1/10W 100	1	
R516	ERJ6GEYG102	M.RESISTOR CH 1/10W 1K	1	
R517	ERJ6GEYF561	M.RESISTOR CH 1/10W 560	1	
R518	ERJ6GEYG102	M.RESISTOR CH 1/10W 1K	1	
R519	ERJ6GEYF822	M.RESISTOR CH 1/10W 8.2K	1	
R520,21	ERJ6GEYG332	M.RESISTOR CH 1/10W 3.3K	2	
R522,23	ERJ6GEYG121	M.RESISTOR CH 1/10W 120	2	
R524	ERJ6GEYG101	M.RESISTOR CH 1/10W 100	1	
R525	ERJ6GEYG222	M.RESISTOR CH 1/10W 2.2K	1	
R526	ERJ6GEYG102	M.RESISTOR CH 1/10W 1K	1	
R527	ERJ6GEYG152	M.RESISTOR CH 1/10W 1.5K	1	
R528	ERJ6GEYG470	M.RESISTOR CH 1/10W 47	1	
R529	ERJ6GEYG152	M.RESISTOR CH 1/10W 1.5K	1	
R530	ERJ6GEYG681	M.RESISTOR CH 1/10W 680	1	
R531	ERJ6GEYG470	M.RESISTOR CH 1/10W 47	1	
R532	ERJ6GEYG102	M.RESISTOR CH 1/10W 1K	1	
R533	ERJ6GEYF472	M.RESISTOR CH 1/10W 4.7K	1	
R537	ERJ6GEYG101	M.RESISTOR CH 1/10W 100	1	
R538	ERJ6GEYF472	M.RESISTOR CH 1/10W 4.7K	1	
R539	ERJ6GEYG103	M.RESISTOR CH 1/10W 10K	1	
R540	ERJ6GEYG101	M.RESISTOR CH 1/10W 100	1	
R541	ERJ6GEY0R00	M.RESISTOR CH 1/10W 0	1	
R542	ERJ6GEYG821	M.RESISTOR CH 1/10W 820	1	

Ref.No.	Part No.	Part Name & Description	Pcs	Remarks
R543,44	ERJ6GEYG102	M.RESISTOR CH 1/10W 1K	2	
R545	ERJ6GEYF822	M.RESISTOR CH 1/10W 8.2K	1	
R546,47	ERJ6GEYG332	M.RESISTOR CH 1/10W 3.3K	2	
R548,49	ERJ6GEYG121	M.RESISTOR CH 1/10W 120	2	
R550	ERJ6GEYG153	M.RESISTOR CH 1/10W 15K	1	
R558	ERJ6GEYG222	M.RESISTOR CH 1/10W 2.2K	1	
R559	ERJ6GEYG102	M.RESISTOR CH 1/10W 1K	1	
R562	ERJ6GEYF473	M.RESISTOR CH 1/10W 47K	1	
R565	ERJ6GEYG224	M.RESISTOR CH 1/10W 220K	1	
R566	ERJ6GEYJ684	M.RESISTOR CH 1/10W 680K	1	
R567-70	ERJ6GEYG103	M.RESISTOR CH 1/10W 10K	4	
R575	ERDS2TJ392	C.RESISTOR 1/4W 3.9K	1	
R601	ERJ6GEYG103	M.RESISTOR CH 1/10W 10K	1	
R602	ERJ6GEYG222	M.RESISTOR CH 1/10W 2.2K	1	
R603	ERJ6GEYG682	M.REISITOR CH 1/10W 6.8K	1	
R604	ERJ6GEYF472	M.RESISTOR CH 1/10W 4.7K	1	
R605	ERJ6GEYG102	M.RESISTOR CH 1/10W 1K	1	
R606,07	ERJ6GEYF472	M.RESISTOR CH 1/10W 4.7K	2	
R608,09	ERJ6GEYG222	M.RESISTOR CH 1/10W 2.2K	2	
R610	ERJ6GEYG392	M.RESISTOR CH 1/10W 3.9K	1	
R611	ERJ6GEYG332	M.RESISTOR CH 1/10W 3.3K	1	
R612,13	ERJ6GEYG682	M.REISITOR CH 1/10W 6.8K	2	
R614	ERJ6GEYG223	M.RESISTOR CH 1/10W 22K	1	
R615	ERJ6GEYG682	M.REISITOR CH 1/10W 6.8K	1	
R616	ERJ6GEYG223	M.RESISTOR CH 1/10W 22K	1	
R617	ERJ6GEYG332	M.RESISTOR CH 1/10W 3.3K	1	
R618	ERJ6GEYG153	M.RESISTOR CH 1/10W 15K	1	
R619	ERJ6GEYG681	M.RESISTOR CH 1/10W 680	1	
R620,21	ERJ6GEYG152	M.RESISTOR CH 1/10W 1.5K	2	
R622	ERJ6GEYG103	M.RESISTOR CH 1/10W 10K	1	
R623	ERJ6GEYG104	M.RESISTOR CH 1/10W 100K	1	
R624	ERJ6GEYG152	M.RESISTOR CH 1/10W 1.5K	1	
R625	ERJ6GEYG683	M.RESISTOR CH 1/10W 68K	1	
R626	ERJ6GEYG101	M.RESISTOR CH 1/10W 100	1	
R631	ERJ6GEY0R00	M.RESISTOR CH 1/10W 0	1	
R651	ERJ6GEYG152	M.RESISTOR CH 1/10W 1.5K	1	
R652	ERJ6RBD562	M.RESISTOR CH 1/10W 5.6K	1	
R653	ERJ6GEYG152	M.RESISTOR CH 1/10W 1.5K	1	
R657	ERJ6GEYG102	M.RESISTOR CH 1/10W 1K	1	
R658	ERJ6GEYG152	M.RESISTOR CH 1/10W 1.5K	1	
R659	ERJ6RBD122	M.RESISTOR CH 1/10W 1.2K	1	
R660	ERJ6RBD272	M.RESISTOR CH 1/10W 2.7K	1	
R661	ERJ6GEYG152	M.RESISTOR CH 1/10W 1.5K	1	
R663	ERJ6GEYG102	M.RESISTOR CH 1/10W 1K	1	
R664	ERJ6GEYG152	M.RESISTOR CH 1/10W 1.5K	1	
R665	ERJ6RBD122	M.RESISTOR CH 1/10W 1.2K	1	
R666	ERJ6RBD272	M.RESISTOR CH 1/10W 2.7K	1	
R667	ERJ6GEYG152	M.RESISTOR CH 1/10W 1.5K	1	
R668	ERJ6GEYG102	M.RESISTOR CH 1/10W 1K	1	
R669	ERJ6RBD101	M.RESISTOR CH 1/10W 100	1	
R670	ERJ6RBD473	M.RESISTOR CH 1/10W 47K	1	
R671,72	ERJ6GEYG103	M.RESISTOR CH 1/10W 10K	2	
R701	ERJ6GEYG103	M.RESISTOR CH 1/10W 10K	1	
R702	ERJ6GEYG102	M.RESISTOR CH 1/10W 1K	1	
R703	ERJ6GEYG331	M.RESISTOR CH 1/10W 330	1	
R704	ERJ6GEYG152	M.RESISTOR CH 1/10W 1.5K	1	
R707	ERJ6GEYG101	M.RESISTOR CH 1/10W 100	1	
R708	ERJ6GEYG181	M.RESISTOR CH 1/10W 180	1	
R711	ERJ6GEYG122	M.RESISTOR CH 1/10W 1.2K	1	
R712	ERJ6GEYG101	M.RESISTOR CH 1/10W 100	1	
R713	ERJ6GEY0R00	M.RESISTOR CH 1/10W 0	1	
R714	ERJ6GEYF333	M.RESISTOR CH 1/10W 33K	1	
R715,16	ERJ6GEYG102	M.RESISTOR CH 1/10W 1K	2	
R717	ERJ6GEYG101	M.RESISTOR CH 1/10W 100	1	
R718	ERJ6GEYG394	M.RESISTOR CH 1/10W 390K	1	
R719	ERJ6GEYG154	M.RESISTOR CH 1/10W 150K	1	
R720,21	ERJ6GEYG105	M.RESISTOR CH 1/10W 1M	2	
R722	ERJ6GEYG101	M.RESISTOR CH 1/10W 100	1	
R723	ERJ6GEYG103	M.RESISTOR CH 1/10W 10K	1	
R724	ERJ6GEYG222	M.RESISTOR CH 1/10W 2.2K	1	
R725	ERJ6GEYG122	M.RESISTOR CH 1/10W 1.2K	1	
R726	ERJ6GEYG331	M.RESISTOR CH 1/10W 330	1	
R727	ERJ6GEYG101	M.RESISTOR CH 1/10W 100	1	
R728	ERJ6GEYG102	M.RESISTOR CH 1/10W 1K	1	
R729	ERJ6GEYG221	M.RESISTOR CH 1/10W 220	1	

Ref.No.	Part No.	Part Name & Description	Pcs	Remarks
R730	ERJ6GEYG152	M.RESISTOR CH 1/10W 1.5K	1	
R731	ERJ6GEYF822	M.RESISTOR CH 1/10W 8.2K	1	
R732	ERJ6GEYG102	M.RESISTOR CH 1/10W 1K	1	
R733	ERJ6GEYG681	M.RESISTOR CH 1/10W 680	1	
R734	ERJ6GEYG102	M.RESISTOR CH 1/10W 1K	1	
R735,36	ERJ6GEYG101	M.RESISTOR CH 1/10W 100	2	
R751	ERJ6GEYG103	M.RESISTOR CH 1/10W 10K	1	
R752	ERJ6GEYG152	M.RESISTOR CH 1/10W 1.5K	1	
R753	ERJ6GEYG471	M.RESISTOR CH 1/10W 470	1	
R754	ERJ6GEYG152	M.RESISTOR CH 1/10W 1.5K	1	
R757	ERJ6GEYG101	M.RESISTOR CH 1/10W 100	1	
R758	ERJ6GEYG391	M.RESISTOR CH 1/10W 390	1	
R761	ERJ6GEYG122	M.RESISTOR CH 1/10W 1.2K	1	
R762	ERJ6GEYG101	M.RESISTOR CH 1/10W 100	1	
R763,64	ERJ6GEYF123	M.RESISTOR CH 1/10W 12K	2	
R765,66	ERJ6GEYG102	M.RESISTOR CH 1/10W 1K	2	
R767	ERJ6GEYG101	M.RESISTOR CH 1/10W 100	1	
R768	ERJ6GEYG394	M.RESISTOR CH 1/10W 390K	1	
R769	ERJ6GEYJ274	M.RESISTOR CH 1/10W 270K	1	
R770,71	ERJ6GEYG105	M.RESISTOR CH 1/10W 1M	2	
R772	ERJ6GEYG101	M.RESISTOR CH 1/10W 100	1	
R773	ERJ6GEYG103	M.RESISTOR CH 1/10W 10K	1	
R774	ERJ6GEYG222	M.RESISTOR CH 1/10W 2.2K	1	
R775	ERJ6GEYG272	M.RESISTOR CH 1/10W 2.7K	1	
R776	ERJ6GEYG471	M.RESISTOR CH 1/10W 470	1	
R777	ERJ6GEYG152	M.RESISTOR CH 1/10W 1.5K	1	
R778	ERJ6GEYF561	M.RESISTOR CH 1/10W 560	1	
R779	ERJ6GEYG152	M.RESISTOR CH 1/10W 1.5K	1	
R780	ERJ6GEYF561	M.RESISTOR CH 1/10W 560	1	
R781	ERJ6GEYG682	M.REISITOR CH 1/10W 6.8K	1	
R782	ERJ6GEYG273	M.RESISTOR CH 1/10W 27K	1	
R783	ERJ6GEYG272	M.RESISTOR CH 1/10W 2.7K	1	
R784-91	ERJ6GEYG102	M.RESISTOR CH 1/10W 1K	8	
R801	ERJ6GEYG103	M.RESISTOR CH 1/10W 10K	1	
R802	ERJ6GEYG152	M.RESISTOR CH 1/10W 1.5K	1	
R803	ERJ6GEYG471	M.RESISTOR CH 1/10W 470	1	
R804	ERJ6GEYG152	M.RESISTOR CH 1/10W 1.5K	1	
R807	ERJ6GEYG101	M.RESISTOR CH 1/10W 100	1	
R808	ERJ6GEYG391	M.RESISTOR CH 1/10W 390	1	
R811	ERJ6GEYG122	M.RESISTOR CH 1/10W 1.2K	1	
R812	ERJ6GEYG101	M.RESISTOR CH 1/10W 100	1	
R813,14	ERJ6GEYF123	M.RESISTOR CH 1/10W 12K	2	
R815,16	ERJ6GEYG102	M.RESISTOR CH 1/10W 1K	2	
R817	ERJ6GEYG101	M.RESISTOR CH 1/10W 100	1	
R818	ERJ6GEYG394	M.RESISTOR CH 1/10W 390K	1	
R819	ERJ6GEYJ274	M.RESISTOR CH 1/10W 270K	1	
R820,21	ERJ6GEYG105	M.RESISTOR CH 1/10W 1M	2	
R822	ERJ6GEYG101	M.RESISTOR CH 1/10W 100	1	
R823	ERJ6GEYG103	M.RESISTOR CH 1/10W 10K	1	
R824	ERJ6GEYG222	M.RESISTOR CH 1/10W 2.2K	1	
R825	ERJ6GEYG272	M.RESISTOR CH 1/10W 2.7K	1	
R826	ERJ6GEYG471	M.RESISTOR CH 1/10W 470	1	
R827	ERJ6GEYG152	M.RESISTOR CH 1/10W 1.5K	1	
R828	ERJ6GEYF561	M.RESISTOR CH 1/10W 560	1	
R829	ERJ6GEYG152	M.RESISTOR CH 1/10W 1.5K	1	
R830	ERJ6GEYF561	M.RESISTOR CH 1/10W 560	1	
R831	ERJ6GEYG682	M.REISITOR CH 1/10W 6.8K	1	
R832	ERJ6GEYG273	M.RESISTOR CH 1/10W 27K	1	
R833	ERJ6GEYG272	M.RESISTOR CH 1/10W 2.7K	1	
R834-41	ERJ6GEYG102	M.RESISTOR CH 1/10W 1K	8	
R854-57	ERJ6GEYG391	M.RESISTOR CH 1/10W 390	4	
R858	ERJ6GEYG332	M.RESISTOR CH 1/10W 3.3K	1	
R859-68	ERJ6GEYG391	M.RESISTOR CH 1/10W 390	10	
R869	ERJ6GEYG332	M.RESISTOR CH 1/10W 3.3K	1	
R872	ERJ6GEY0R00	M.RESISTOR CH 1/10W 0	1	
R875	ERJ6GEYG103	M.RESISTOR CH 1/10W 10K	1	
R901-03	ERJ6GEYG101	M.RESISTOR CH 1/10W 100	3	
R911-13	ERJ6GEYG470	M.RESISTOR CH 1/10W 47	3	
R914	ERJ6GEYG101	M.RESISTOR CH 1/10W 100	1	
R916	ERJ6GEYG101	M.RESISTOR CH 1/10W 100	1	
R917,18	ERJ6GEYG103	M.RESISTOR CH 1/10W 10K	2	
R919	ERJ6GEYG101	M.RESISTOR CH 1/10W 100	1	
R920	ERJ6GEYG103	M.RESISTOR CH 1/10W 10K	1	
R921	ERJ6GEYG101	M.RESISTOR CH 1/10W 100	1	
R923	ERJ6GEYG105	M.RESISTOR CH 1/10W 1M	1	

Ref.No.	Part No.	Part Name & Description	Pcs	Remarks
R948,49	ERJ6GEYG103	M.RESISTOR CH 1/10W 10K	2	
R950	ERJ6GEYG222	M.RESISTOR CH 1/10W 2.2K	1	
R951	ERJ6GEYG101	M.RESISTOR CH 1/10W 100	1	
R952	ERJ6GEYG222	M.RESISTOR CH 1/10W 2.2K	1	
R953	ERJ6GEYG102	M.RESISTOR CH 1/10W 1K	1	
R954	ERJ6GEYG152	M.RESISTOR CH 1/10W 1.5K	1	
R955	ERJ6GEYG470	M.RESISTOR CH 1/10W 47	1	
R956	ERJ6GEYG152	M.RESISTOR CH 1/10W 1.5K	1	
R957	ERJ6GEYG681	M.RESISTOR CH 1/10W 680	1	
R958	ERJ6GEYG470	M.RESISTOR CH 1/10W 47	1	
R959	ERJ6GEYG102	M.RESISTOR CH 1/10W 1K	1	
R960	ERJ6GEYF472	M.RESISTOR CH 1/10W 4.7K	1	
R961	ERJ6GEYG101	M.RESISTOR CH 1/10W 100	1	
R962,63	ERJ6GEYG103	M.RESISTOR CH 1/10W 10K	2	
R965	ERJ6GEYJ274	M.RESISTOR CH 1/10W 270K	1	
R966	ERJ6GEY0R00	M.RESISTOR CH 1/10W 0	1	
R970	ERJ6GEYG103	M.RESISTOR CH 1/10W 10K	1	
R973,74	ERJ6GEYG103	M.RESISTOR CH 1/10W 10K	2	
R975,76	ERJ6GEYG332	M.RESISTOR CH 1/10W 3.3K	2	
R977,78	ERJ6GEY0R00	M.RESISTOR CH 1/10W 0	2	
R979	ERJ6GEYG272	M.RESISTOR CH 1/10W 2.7K	1	
R980	ERJ6GEYG101	M.RESISTOR CH 1/10W 100	1	
R981	ERJ6GEYG103	M.RESISTOR CH 1/10W 10K	1	
R982	ERJ6GEYG101	M.RESISTOR CH 1/10W 100	1	
R983	ERJ6GEYG394	M.RESISTOR CH 1/10W 390K	1	
R984	ERJ6GEYG103	M.RESISTOR CH 1/10W 10K	1	
R985	ERJ6GEYF472	M.RESISTOR CH 1/10W 4.7K	1	
R986,87	ERJ6GEYG103	M.RESISTOR CH 1/10W 10K	2	
R988	ERJ6GEYG563	M.RESISTOR CH 1/10W 56K	1	
R989	ERJ6GEYF561	M.RESISTOR CH 1/10W 560	1	
R990	ERJ6GEYG102	M.RESISTOR CH 1/10W 1K	1	
R991	ERJ6GEY0R00	M.RESISTOR CH 1/10W 0	1	
R992	ERJ6GEYG101	M.RESISTOR CH 1/10W 100	1	
VL601	VLQ0415	COIL	1	
VR301	EVMEGSA00B53	V.RESISTOR 5K	1	
VR351	EVMEGSA00B53	V.RESISTOR 5K	1	
VR451	EVMEGSA00B12	V.RESISTOR 100	1	
VR455	EVMEGSA00B52	V.RESISTOR 500	1	
VR501	EVMEGSA00B53	V.RESISTOR 5K	1	
VR502	EVMEGSA00B13	V.RESISTOR 1K	1	
VR505	EVMEGSA00B13	V.RESISTOR 1K	1	
VR507	EVMEGSA00B13	V.RESISTOR 1K	1	
VR510,11	EVMEGSA00B13	V.RESISTOR 1K	2	
VR512	EVMEGSA00B53	V.RESISTOR 5K	1	
VR601	EVMEGSA00B23	V.RESISTOR 2K	1	
VR602	EVMEGSA00B53	V.RESISTOR 5K	1	
VR701	EVMEGSA00B13	V.RESISTOR 1K	1	
VR702	EVMEGSA00B53	V.RESISTOR 5K	1	
VR703	EVMEGSA00B13	V.RESISTOR 1K	1	
VR704	EVMEGSA00B14	V.RESISTOR 10K	1	
VR751	EVMEGSA00B13	V.RESISTOR 1K	1	
VR752	EVMEGSA00B53	V.RESISTOR 5K	1	
VR753	EVMEGSA00B13	V.RESISTOR 1K	1	
VR754	EVMEGSA00B53	V.RESISTOR 5K	1	
VR801	EVMEGSA00B13	V.RESISTOR 1K	1	
VR802	EVMEGSA00B53	V.RESISTOR 5K	1	
VR803	EVMEGSA00B13	V.RESISTOR 1K	1	
VR804	EVMEGSA00B53	V.RESISTOR 5K	1	
VR951	EVMEGSA00B23	V.RESISTOR 2K	1	
VR952	EVMEGSA00B52	V.RESISTOR 500	1	
X402	VSX0330	CRYSTAL OSCILLATOR	1	
X501	VSX0338	CRYSTAL OSCILLATOR	1	
		MISCELLANEOUS		
	VML2143	CARD PULLER	1	
	VML2144	CARD PULLER	1	

Ref.No.	Part No.	Part Name & Description	Pcs	Remarks

Ref.No.	Part No.	Part Name & Description	Pcs	Remarks
■ E6	VEP83449A	F6 VIDEO IN P.C.BOARD	1	(RTL)FOR AJ-D850E
C51-54	ECUM1E104ZFN	C.CAPACITOR CH 25V 0.1U	4	
C55	ECEV1CV470Q	E.CAPACITOR CH 16V 47U	1	
C56	ECEV0JV330Q	E.CAPACITOR CH6.3V 33U	1	
C57	ECEV1CV470Q	E.CAPACITOR CH 16V 47U	1	
C58-64	ECUM1E104ZFN	C.CAPACITOR CH 25V 0.1U	7	
C65	ECEV1CV470Q	E.CAPACITOR CH 16V 47U	1	
C66	ECEV0JV330Q	E.CAPACITOR CH6.3V 33U	1	
C67	ECEV1CV470Q	E.CAPACITOR CH 16V 47U	1	
C68-70	ECUM1E104ZFN	C.CAPACITOR CH 25V 0.1U	3	
C101-08	ECUM1E104ZFN	C.CAPACITOR CH 25V 0.1U	8	
C110	ECUM1E104ZFN	C.CAPACITOR CH 25V 0.1U	1	
C111	ECUM1H101JCN	C.CAPACITOR CH 50V 100P	1	
C112	ECUM1H271JCN	C.CAPACITOR CH 50V 270P	1	
C114	ECCF1H101JC	C.CAPACITOR 50V 100P	1	
C131,32	ECUM1H101JCN	C.CAPACITOR CH 50V 100P	2	
C151-59	ECUM1E104ZFN	C.CAPACITOR CH 25V 0.1U	9	
C160	ECUM1H103KBN	C.CAPACITOR CH 50V 0.01U	1	
C162	ECUM1E104ZFN	C.CAPACITOR CH 25V 0.1U	1	
C201-04	ECUM1E104ZFN	C.CAPACITOR CH 25V 0.1U	4	
C212,13	ECUM1E104ZFN	C.CAPACITOR CH 25V 0.1U	2	
C215	ECUM1E104ZFN	C.CAPACITOR CH 25V 0.1U	1	
C251-54	ECEV1CV100Q	E.CAPACITOR CH 16V 10U	4	
C255-60	ECUM1E104ZFN	C.CAPACITOR CH 25V 0.1U	6	
C261	ECUX1E104KBN	C.CAPACITOR CH 25V 0.1U	1	
C262,63	ECUM1E104ZFN	C.CAPACITOR CH 25V 0.1U	2	
C264	ECEV1EV4R7Q	E.CAPACITOR CH 25V 4.7U	1	
C265-68	ECUM1E104ZFN	C.CAPACITOR CH 25V 0.1U	4	
C269,70	ECEV0JV330Q	E.CAPACITOR CH6.3V 33U	2	
C271-76	ECUM1E104ZFN	C.CAPACITOR CH 25V 0.1U	6	
C277	ECUM1H390JCN	C.CAPACITOR CH 50V 39P	1	
C278	ECUM1H181JCN	C.CAPACITOR CH 50V 180P	1	
C279,80	ECUM1E104ZFN	C.CAPACITOR CH 25V 0.1U	2	
C281	ECUM1H080DCN	C.CAPACITOR CH 50V 8P	1	
C283	ECEV1CV470Q	E.CAPACITOR CH 16V 47U	1	
C284	ECUM1E104ZFN	C.CAPACITOR CH 25V 0.1U	1	
C285	ECEV0JV330Q	E.CAPACITOR CH6.3V 33U	1	
C286	ECUM1H103KBN	C.CAPACITOR CH 50V 0.01U	1	
C287	ECUM1H820JCN	C.CAPACITOR CH 50V 82P	1	
C288,89	ECUM1H103KBN	C.CAPACITOR CH 50V 0.01U	2	
C292	ECUM1H101JCN	C.CAPACITOR CH 50V 100P	1	
C301,02	ECUM1E104ZFN	C.CAPACITOR CH 25V 0.1U	2	
C303-06	ECEV0JV330Q	E.CAPACITOR CH6.3V 33U	4	
C307	ECEV1CV470Q	E.CAPACITOR CH 16V 47U	1	
C308-11	ECUM1E104ZFN	C.CAPACITOR CH 25V 0.1U	4	
C312	ECUM1H470JCN	C.CAPACITOR CH 50V 47P	1	
C313	ECUM1E104ZFN	C.CAPACITOR CH 25V 0.1U	1	
C315	ECUM1E104KBN	C.CAPACITOR CH 25V 0.1U	1	
C317-21	ECUM1E104ZFN	C.CAPACITOR CH 25V 0.1U	5	
C322	ECUM1H180JCN	C.CAPACITOR CH 50V 18P	1	
C324-26	ECUM1E104ZFN	C.CAPACITOR CH 25V 0.1U	3	
C327	ECEV0JV330Q	E.CAPACITOR CH6.3V 33U	1	
C328,29	ECUM1E104ZFN	C.CAPACITOR CH 25V 0.1U	2	
C330	ECEV0JV330Q	E.CAPACITOR CH6.3V 33U	1	
C331-33	ECUM1E104ZFN	C.CAPACITOR CH 25V 0.1U	3	
C334	ECUM1H271JCN	C.CAPACITOR CH 50V 270P	1	
C351-54	ECUM1E104ZFN	C.CAPACITOR CH 25V 0.1U	4	
C355-57	ECEV0JV330Q	E.CAPACITOR CH6.3V 33U	3	
C358-61	ECUM1E104ZFN	C.CAPACITOR CH 25V 0.1U	4	
C363,64	ECUM1E104ZFN	C.CAPACITOR CH 25V 0.1U	2	
C365,66	ECEV0JV330Q	E.CAPACITOR CH6.3V 33U	2	
C368-76	ECUM1E104ZFN	C.CAPACITOR CH 25V 0.1U	9	
C378	ECUX1E104KBN	C.CAPACITOR CH 25V 0.1U	1	
C380	ECUM1H390JCN	C.CAPACITOR CH 50V 39P	1	
C381	ECUX1E104KBN	C.CAPACITOR CH 25V 0.1U	1	
C383	ECUM1H470JCN	C.CAPACITOR CH 50V 47P	1	
C386,87	ECUM1E104ZFN	C.CAPACITOR CH 25V 0.1U	2	
C389	ECUX1E104KBN	C.CAPACITOR CH 25V 0.1U	1	
C390,91	ECUM1E104ZFN	C.CAPACITOR CH 25V 0.1U	2	
C392	ECUM1H330JCN	C.CAPACITOR CH 50V 33P	1	
C393	ECUM1H271JCN	C.CAPACITOR CH 50V 270P	1	
C394	ECUM1H220JCN	C.CAPACITOR CH 50V 22P	1	

Ref.No.	Part No.	Part Name & Description	Pcs	Remarks
C395	ECUM1H680JCN	C.CAPACITOR CH 50V 68P	1	
C396	ECUM1H070DCN	C.CAPACITOR CH 50V 7P	1	
C397	ECUM1E104ZFN	C.CAPACITOR CH 25V 0.1U	1	
C398	ECUM1H121JCN	C.CAPACITOR CH 50V 120P	1	
C399	ECUM1H100DCN	C.CAPACITOR CH 50V 10P	1	
C400	ECUM1E104ZFN	C.CAPACITOR CH 25V 0.1U	1	
C401	ECUM1H100DCN	C.CAPACITOR CH 50V 10P	1	
C402	ECUM1H330JCN	C.CAPACITOR CH 50V 33P	1	
C403-05	ECUM1E104ZFN	C.CAPACITOR CH 25V 0.1U	3	
C406	ECUX1E104KBN	C.CAPACITOR CH 25V 0.1U	1	
C410-13	ECUM1E104ZFN	C.CAPACITOR CH 25V 0.1U	4	
C414	ECUM1H101JCN	C.CAPACITOR CH 50V 100P	1	
C415,16	ECUM1E104ZFN	C.CAPACITOR CH 25V 0.1U	2	
C417	ECEV1HV4R7Q	E.CAPACITOR CH 50V 4.7U	1	
C418-20	ECEV0JV330Q	E.CAPACITOR CH6.3V 33U	3	
C421-23	ECUM1E104ZFN	C.CAPACITOR CH 25V 0.1U	3	
C424	ECUM1H121JCN	C.CAPACITOR CH 50V 120P	1	
C425	ECUM1H271JCN	C.CAPACITOR CH 50V 270P	1	
C426	ECUM1E104ZFN	C.CAPACITOR CH 25V 0.1U	1	
C427,28	ECUM1H103KBN	C.CAPACITOR CH 50V 0.01U	2	
C429	ECUX1H102JCN	C.CAPACITOR CH 50V 1000P	1	
C430	ECUM1E104ZFN	C.CAPACITOR CH 25V 0.1U	1	
C431	ECUM1H271JCN	C.CAPACITOR CH 50V 270P	1	
C432	ECEV1HNR47Q	E.CAPACITOR CH 50V 0.47U	1	
C433	ECUM1E104ZFN	C.CAPACITOR CH 25V 0.1U	1	
C434	ECUX1H561JCN	C.CAPACITOR CH 50V 560P	1	
C435-39	ECUM1E104ZFN	C.CAPACITOR CH 25V 0.1U	5	
C442	ECUM1H070DCN	C.CAPACITOR CH 50V 7P	1	
C443	ECUM1H151JCN	C.CAPACITOR CH 50V 150P	1	
C451	ECEV0JV330Q	E.CAPACITOR CH6.3V 33U	1	
C452-55	ECEV1CV100Q	E.CAPACITOR CH 16V 10U	4	
C456-60	ECUM1E104ZFN	C.CAPACITOR CH 25V 0.1U	5	
C461-64	ECUX1E104KBN	C.CAPACITOR CH 25V 0.1U	4	
C465	ECUM1H270JCN	C.CAPACITOR CH 50V 27P	1	
C466-70	ECUM1E104ZFN	C.CAPACITOR CH 25V 0.1U	5	
C471,72	ECUM1H103KBN	C.CAPACITOR CH 50V 0.01U	2	
C473	ECUM1H220JCN	C.CAPACITOR CH 50V 22P	1	
C474	ECUM1E104ZFN	C.CAPACITOR CH 25V 0.1U	1	
C475	ECUM1H180JCN	C.CAPACITOR CH 50V 18P	1	
C476	ECEV1CV470Q	E.CAPACITOR CH 16V 47U	1	
C477	ECUM1H180JCN	C.CAPACITOR CH 50V 18P	1	
C478-80	ECEV1CV470Q	E.CAPACITOR CH 16V 47U	3	
C481,82	ECUM1H040CCN	C.CAPACITOR CH 50V 4P	2	
C483,84	ECUM1H103ZFN	C.CAPACITOR CH 50V 0.01U	2	
C485,86	ECUM1H680JCN	C.CAPACITOR CH 50V 68P	2	
C487-90	ECUM1H080DCN	C.CAPACITOR CH 50V 8P	4	
C491,92	ECUM1H103ZFN	C.CAPACITOR CH 50V 0.01U	2	
C493-96	ECUM1H470JCN	C.CAPACITOR CH 50V 47P	4	
C497-00	ECUM1H103ZFN	C.CAPACITOR CH 50V 0.01U	4	
C501,02	ECEV0JV330Q	E.CAPACITOR CH6.3V 33U	2	
C503-06	ECUM1H103ZFN	C.CAPACITOR CH 50V 0.01U	4	
C510	ECEV1CV470Q	E.CAPACITOR CH 16V 47U	1	
C511-15	ECUM1E104ZFN	C.CAPACITOR CH 25V 0.1U	5	
C516	ECUM1H270JCN	C.CAPACITOR CH 50V 27P	1	
C517	ECUM1H101JCN	C.CAPACITOR CH 50V 100P	1	
C518,19	ECUM1E104ZFN	C.CAPACITOR CH 25V 0.1U	2	
C520,21	ECEV0JV330Q	E.CAPACITOR CH6.3V 33U	2	
C524,25	ECUM1H103KBN	C.CAPACITOR CH 50V 0.01U	2	
C526	ECUM1H820JCN	C.CAPACITOR CH 50V 82P	1	
C527,28	ECUM1H103KBN	C.CAPACITOR CH 50V 0.01U	2	
C530	ECUM1H103KBN	C.CAPACITOR CH 50V 0.01U	1	
C531-34	ECUM1E104ZFN	C.CAPACITOR CH 25V 0.1U	4	
C535	ECEV0JV330Q	E.CAPACITOR CH6.3V 33U	1	
C536	ECUM1E683KBN	C.CAPACITOR CH 25V 0.063U	1	
C537	ECUM1H471JCN	C.CAPACITOR CH 50V 470P	1	
C538	ECEV1HV010Q	E.CAPACITOR CH 50V 1U	1	
C539	ECUM1E104ZFN	C.CAPACITOR CH 25V 0.1U	1	
C540	ECEV1HV4R7Q	E.CAPACITOR CH 50V 4.7U	1	
C541	ECUM1H821JCN	C.CAPACITOR CH 50V 820P	1	
C542	ECEV0JV330Q	E.CAPACITOR CH6.3V 33U	1	
C543	ECUX1H392KBN	C.CAPACITOR CH 50V 3900P	1	
C544	ECUM1H152KBN	C.CAPACITOR CH 50V 1500P	1	
C545	ECEV1HVR68Q	E.CAPACITOR CH 50V 0.68U	1	
C546	ECUM1E104ZFN	C.CAPACITOR CH 25V 0.1U	1	
C551,52	ECEV0JV330Q	E.CAPACITOR CH6.3V 33U	2	

Ref.No.	Part No.	Part Name & Description	Pcs	Remarks
C553	ECUM1H470JCN	C.CAPACITOR CH 50V 47P	1	
C554	ECUX1H102JCN	C.CAPACITOR CH 50V 1000P	1	
C555,56	ECUM1E104ZFN	C.CAPACITOR CH 25V 0.1U	2	
C557	ECUM1H470JCN	C.CAPACITOR CH 50V 47P	1	
C558,59	ECUM1E104ZFN	C.CAPACITOR CH 25V 0.1U	2	
C560	ECUM1H101JCN	C.CAPACITOR CH 50V 100P	1	
C561	ECUX1H102JCN	C.CAPACITOR CH 50V 1000P	1	
C562	ECUX1H681JCN	C.CAPACITOR CH 50V 680P	1	
C563	ECUM1E104ZFN	C.CAPACITOR CH 25V 0.1U	1	
C564	ECUM1H271JCN	C.CAPACITOR CH 50V 270P	1	
C565	ECUM1H471JCN	C.CAPACITOR CH 50V 470P	1	
C566	ECUM1E104ZFN	C.CAPACITOR CH 25V 0.1U	1	
C567	ECUM1H820JCN	C.CAPACITOR CH 50V 82P	1	
C568	ECUX1H102JCN	C.CAPACITOR CH 50V 1000P	1	
C569,70	ECUM1E104ZFN	C.CAPACITOR CH 25V 0.1U	2	
C571	ECUM1H103KBN	C.CAPACITOR CH 50V 0.01U	1	
C572	ECUM1E104ZFN	C.CAPACITOR CH 25V 0.1U	1	
C573	ECUM1H470JCN	C.CAPACITOR CH 50V 47P	1	
C576	ECUM1E104ZFN	C.CAPACITOR CH 25V 0.1U	1	
C578	ECUM1H103KBN	C.CAPACITOR CH 50V 0.01U	1	
C579,80	ECEV1HN010Q	E.CAPACITOR CH 50V 1U	2	
C581	ECUX1H102JCN	C.CAPACITOR CH 50V 1000P	1	
C601,02	ECEV0JV330Q	E.CAPACITOR CH6.3V 33U	2	
C603,04	ECUM1E104ZFN	C.CAPACITOR CH 25V 0.1U	2	
C651	ECEV0JV330Q	E.CAPACITOR CH6.3V 33U	1	
C652-54	ECUM1E104ZFN	C.CAPACITOR CH 25V 0.1U	3	
C655	ECEV0JV330Q	E.CAPACITOR CH6.3V 33U	1	
C656-58	ECUM1E104ZFN	C.CAPACITOR CH 25V 0.1U	3	
C659,60	ECEV0JV330Q	E.CAPACITOR CH6.3V 33U	2	
C661,62	ECUM1E104ZFN	C.CAPACITOR CH 25V 0.1U	2	
C663,64	ECEV0JV330Q	E.CAPACITOR CH6.3V 33U	2	
C665	ECUM1E104ZFN	C.CAPACITOR CH 25V 0.1U	1	
C666	ECEV1CV470Q	E.CAPACITOR CH 16V 47U	1	
C667	ECUM1E104ZFN	C.CAPACITOR CH 25V 0.1U	1	
C668,69	ECEV0JV330Q	E.CAPACITOR CH6.3V 33U	2	
C671	ECUM1H010CCN	C.CAPACITOR CH 50V 1P	1	
C672	ECUM1E104ZFN	C.CAPACITOR CH 25V 0.1U	1	
C673	ECUX1E104KBN	C.CAPACITOR CH 25V 0.1U	1	
C675	ECUM1E104ZFN	C.CAPACITOR CH 25V 0.1U	1	
C676	ECUX1E104KBN	C.CAPACITOR CH 25V 0.1U	1	
C677	ECUM1E104ZFN	C.CAPACITOR CH 25V 0.1U	1	
C678	ECUM1H331JCN	C.CAPACITOR CH 50V 330P	1	
C679	ECUM1H470JCN	C.CAPACITOR CH 50V 47P	1	
C680,81	ECUM1E104ZFN	C.CAPACITOR CH 25V 0.1U	2	
C682	ECEV0JV330Q	E.CAPACITOR CH6.3V 33U	1	
C683-85	ECUM1E104ZFN	C.CAPACITOR CH 25V 0.1U	3	
C686	ECEV0JV330Q	E.CAPACITOR CH6.3V 33U	1	
C687-89	ECUM1E104ZFN	C.CAPACITOR CH 25V 0.1U	3	
C701	ECEV0JV330Q	E.CAPACITOR CH6.3V 33U	1	
C702	ECEV1CV100Q	E.CAPACITOR CH 16V 10U	1	
C703-05	ECUM1E104ZFN	C.CAPACITOR CH 25V 0.1U	3	
C706	ECEV0JV330Q	E.CAPACITOR CH6.3V 33U	1	
C707-09	ECUM1E104ZFN	C.CAPACITOR CH 25V 0.1U	3	
C710,11	ECEV0JV330Q	E.CAPACITOR CH6.3V 33U	2	
C712	ECUM1H080DCN	C.CAPACITOR CH 50V 8P	1	
C713	ECUM1E104ZFN	C.CAPACITOR CH 25V 0.1U	1	
C714	ECUM1H470JCN	C.CAPACITOR CH 50V 47P	1	
C715	ECUM1E104ZFN	C.CAPACITOR CH 25V 0.1U	1	
C716,17	ECEV0JV330Q	E.CAPACITOR CH6.3V 33U	2	
C718	ECUM1E104ZFN	C.CAPACITOR CH 25V 0.1U	1	
C719	ECEV1CV470Q	E.CAPACITOR CH 16V 47U	1	
C720	ECUM1E104ZFN	C.CAPACITOR CH 25V 0.1U	1	
C721	ECEV1CV100Q	E.CAPACITOR CH 16V 10U	1	
C722	ECEV0JV330Q	E.CAPACITOR CH6.3V 33U	1	
C725	ECUM1E104ZFN	C.CAPACITOR CH 25V 0.1U	1	
C726	ECUX1E104KBN	C.CAPACITOR CH 25V 0.1U	1	
C728	ECUM1E104ZFN	C.CAPACITOR CH 25V 0.1U	1	
C729	ECUX1E104KBN	C.CAPACITOR CH 25V 0.1U	1	
C730	ECUM1E104ZFN	C.CAPACITOR CH 25V 0.1U	1	
C731	ECUM1H331JCN	C.CAPACITOR CH 50V 330P	1	
C732	ECUM1H470JCN	C.CAPACITOR CH 50V 47P	1	
C734	ECUM1E104ZFN	C.CAPACITOR CH 25V 0.1U	1	
C736	ECUM1E104ZFN	C.CAPACITOR CH 25V 0.1U	1	
C738	ECUM1E104ZFN	C.CAPACITOR CH 25V 0.1U	1	
C739	ECEV0JV330Q	E.CAPACITOR CH6.3V 33U	1	

Ref.No.	Part No.	Part Name & Description	Pcs	Remarks
C740-42	ECUM1E104ZFN	C.CAPACITOR CH 25V 0.1U	3	
C751	ECEV0JV330Q	E.CAPACITOR CH6.3V 33U	1	
C752	ECEV1CV100Q	E.CAPACITOR CH 16V 10U	1	
C753-55	ECUM1E104ZFN	C.CAPACITOR CH 25V 0.1U	3	
C756	ECEV0JV330Q	E.CAPACITOR CH6.3V 33U	1	
C757-59	ECUM1E104ZFN	C.CAPACITOR CH 25V 0.1U	3	
C760,61	ECEV0JV330Q	E.CAPACITOR CH6.3V 33U	2	
C762	ECUM1H080DCN	C.CAPACITOR CH 50V 8P	1	
C763	ECUM1E104ZFN	C.CAPACITOR CH 25V 0.1U	1	
C764	ECUM1H470JCN	C.CAPACITOR CH 50V 47P	1	
C765	ECUM1E104ZFN	C.CAPACITOR CH 25V 0.1U	1	
C766,67	ECEV0JV330Q	E.CAPACITOR CH6.3V 33U	2	
C768	ECUM1E104ZFN	C.CAPACITOR CH 25V 0.1U	1	
C769	ECEV1CV470Q	E.CAPACITOR CH 16V 47U	1	
C770	ECUM1E104ZFN	C.CAPACITOR CH 25V 0.1U	1	
C771	ECEV1CV100Q	E.CAPACITOR CH 16V 10U	1	
C772	ECEV0JV330Q	E.CAPACITOR CH6.3V 33U	1	
C775	ECUM1E104ZFN	C.CAPACITOR CH 25V 0.1U	1	
C776	ECUX1E104KBN	C.CAPACITOR CH 25V 0.1U	1	
C778	ECUM1E104ZFN	C.CAPACITOR CH 25V 0.1U	1	
C779	ECUX1E104KBN	C.CAPACITOR CH 25V 0.1U	1	
C780	ECUM1E104ZFN	C.CAPACITOR CH 25V 0.1U	1	
C781	ECUM1H331JCN	C.CAPACITOR CH 50V 330P	1	
C782	ECUM1H470JCN	C.CAPACITOR CH 50V 47P	1	
C784	ECUM1E104ZFN	C.CAPACITOR CH 25V 0.1U	1	
C786	ECUM1E104ZFN	C.CAPACITOR CH 25V 0.1U	1	
C788	ECUM1E104ZFN	C.CAPACITOR CH 25V 0.1U	1	
C789	ECEV0JV330Q	E.CAPACITOR CH6.3V 33U	1	
C790	ECUM1E104ZFN	C.CAPACITOR CH 25V 0.1U	1	
C792,93	ECUM1E104ZFN	C.CAPACITOR CH 25V 0.1U	2	
C801-10	ECUM1E104ZFN	C.CAPACITOR CH 25V 0.1U	10	
C853-55	ECUM1E104ZFN	C.CAPACITOR CH 25V 0.1U	3	
C856	ECUM1H330JCN	C.CAPACITOR CH 50V 33P	1	
C857	ECUM1H150JCN	C.CAPACITOR CH 50V 15P	1	
C858-73	ECUM1E104ZFN	C.CAPACITOR CH 25V 0.1U	16	
C901,02	ECUM1H104ZFN	C.CAPACITOR CH 50V 0.1U	2	
C903,04	ECEV0JV330Q	E.CAPACITOR CH6.3V 33U	2	
C905,06	ECUX1H223KBN	C.CAPACITOR CH 50V 0.22U	2	
C907	ECUM1H221JCN	C.CAPACITOR CH 50V 220P	1	
C908,09	ECUM1H050CCN	C.CAPACITOR CH 50V 5P	2	
C910	ECUM1H104ZFN	C.CAPACITOR CH 50V 0.1U	1	
C911	ECUM1H221JCN	C.CAPACITOR CH 50V 220P	1	
C912,13	ECUM1H104ZFN	C.CAPACITOR CH 50V 0.1U	2	
C957,58	ECUM1E104ZFN	C.CAPACITOR CH 25V 0.1U	2	
C959	ECEV0JV330Q	E.CAPACITOR CH6.3V 33U	1	
C960	ECEV1CV100Q	E.CAPACITOR CH 16V 10U	1	
C961,62	ECUM1E104ZFN	C.CAPACITOR CH 25V 0.1U	2	
C963	ECEV0JV330Q	E.CAPACITOR CH6.3V 33U	1	
C965	ECEV1EV4R7Q	E.CAPACITOR CH 25V 4.7U	1	
C966	ECUM1H470JCN	C.CAPACITOR CH 50V 47P	1	
C967	ECEV0JV330Q	E.CAPACITOR CH6.3V 33U	1	
C971,72	ECUM1E104ZFN	C.CAPACITOR CH 25V 0.1U	2	
C973	ECEV0JV330Q	E.CAPACITOR CH6.3V 33U	1	
C974,75	ECUM1E104ZFN	C.CAPACITOR CH 25V 0.1U	2	
C981-92	ECUM1E104ZFN	C.CAPACITOR CH 25V 0.1U	12	
D251,52	MA152K	DIODE	2	
D253	MA152WK	DIODE	1	
D301,02	MA152K	DIODE	2	
D451	MA152K	DIODE	1	
D501	MA152WK	DIODE	1	
D502	MA152K	DIODE	1	
D551	MA152K	DIODE	1	
D552	MA335	DIODE	1	
D553	MA152WA	DIODE	1	
D651,52	MA152K	DIODE	2	
D701,02	MA152K	DIODE	2	
D751,52	MA152K	DIODE	2	
FL51,52	VLF1016A223	FILTER	2	
FL251	VLF1294	FILTER	1	
FL301	VLF1016A223	FILTER	1	
FL351	VLF1016A223	FILTER	1	
FL551,52	VLF1016A223	FILTER	2	
FL651	VLF1294	FILTER	1	

Ref.No.	Part No.	Part Name & Description	Pcs	Remarks
FL652	VLF1016A223	FILTER	1	
FL701	VLF1295	FILTER	1	
FL751	VLF1295	FILTER	1	
FL801,02	VLF1016A223	FILTER	2	
FL851,52	VLF1016A223	FILTER	2	
FL901	VLF1016A223	FILTER	1	
FL951	VLF1015	FILTER	1	
FL981,82	VLF1016A223	FILTER	2	
IC51	AN78N09	IC	1	
IC52	AN78N05	IC	1	
IC53	AN79N09	IC	1	
IC54	AN79N05	IC	1	
IC101-03	MC10H125M	IC	3	
IC107	MC10H125M	IC	1	
IC110	74F244SJ	IC	1	
IC151,52	SN74S1051NS	IC	2	
IC153	EPM7128STC15	IC	1	
IC156	74F245SJ	IC	1	
IC164,65	UPD71055GB	IC	2	
IC201	EPM7128STC15	IC	1	
IC203	T74HCT541AF	IC	1	
IC204	T74HCT374AF	IC	1	
IC210	T74HCT374AF	IC	1	
IC251	DAC10GS	IC	1	
IC252	NJM082BM	IC	1	
IC254	EL2082CS	IC	1	
IC255	NJM78L05UA	IC	1	
IC256	NJM79L05UA	IC	1	
IC257	TC4W53F	IC	1	
IC258	AN91A12S	IC	1	
IC259	MC74HC00AF	IC	1	
IC301	NJM79L05UA	IC	1	
IC302	NJM78L05UA	IC	1	
IC303	NJM084M	IC	1	
IC304	AD818AR	IC	1	
IC308	CXD1175AM	IC	1	
IC309	NJM78L05UA	IC	1	
IC351,52	NJM78L05UA	IC	2	
IC353	NJM79L05UA	IC	1	
IC354	CXD2105AQ	IC	1	
IC355	AD8047AR	IC	1	
IC356	MC74HC4053F	IC	1	
IC357,58	AD8047AR	IC	2	
IC359	MC74HC4053F	IC	1	
IC401	SN74LS221NS	IC	1	
IC402,03	MM74HC221AM	IC	2	
IC404	MC74HC04AF	IC	1	
IC406	NJM78L05UA	IC	1	
IC407	NJM79L05UA	IC	1	
IC410	NJM082BM	IC	1	
IC414	MC74HC4053F	IC	1	
IC418	NJM082BM	IC	1	
IC419	MC74HC4053F	IC	1	
IC423	NJM082BM	IC	1	
IC428	UPD65013BC16	IC	1	
IC451	NJM319M	IC	1	
IC452,53	NJM1496M	IC	2	
IC455,56	MC74HC4053F	IC	2	
IC459	NJM78L05UA	IC	1	
IC460	NJM79L05UA	IC	1	
IC501	NJM78L05UA	IC	1	
IC502	NJM79L05UA	IC	1	
IC503	AN91A12S	IC	1	
IC504	MC14538BF	IC	1	
IC505	AN3296S	IC	1	
IC506	NJM78L05UA	IC	1	
IC507	MN53015VZW	IC	1	
IC551	MC74HC00AF	IC	1	
IC552	TC4S584F	IC	1	
IC554	MC74HC74AF	IC	1	
IC557	SN74LS221NS	IC	1	
IC560	NJM082BM	IC	1	
IC561	TC4W53F	IC	1	
IC562	SN74LS221NS	IC	1	

Ref.No.	Part No.	Part Name & Description	Pcs	Remarks
IC567	MC74HC244AF	IC	1	
IC651	NJM78L05UA	IC	1	
IC652	NJM79L05UA	IC	1	
IC653	MC74HC4053F	IC	1	
IC655	NJM084M	IC	1	
IC656	AD848JR	IC	1	
IC660	CXD1175AM	IC	1	
IC661	NJM78L05UA	IC	1	
IC701	NJM78L05UA	IC	1	
IC702	NJM79L05UA	IC	1	
IC703	MC74HC4053F	IC	1	
IC705	NJM084M	IC	1	
IC706	AD848JR	IC	1	
IC710	MB40568PF	IC	1	
IC711	NJM78L05UA	IC	1	
IC712	AN78N09	IC	1	
IC713	T74HCT541AF	IC	1	
IC751	NJM78L05UA	IC	1	
IC752	NJM79L05UA	IC	1	
IC753	MC74HC4053F	IC	1	
IC755	NJM084M	IC	1	
IC756	AD848JR	IC	1	
IC760	MB40568PF	IC	1	
IC761	NJM78L05UA	IC	1	
IC762	AN78N09	IC	1	
IC763	T74HCT541AF	IC	1	
IC801	UPD42280G3	IC	1	
IC802	T160G70-1601	IC	1	
IC803	UPD42280G3	IC	1	
IC853	74F244SJ	IC	1	
IC854	CG25123-5106	IC	1	
IC855,56	CY7C19920ZC	IC	2	
IC857,58	74F244SJ	IC	2	
IC859,60	UPD42280G3	IC	2	
IC861,62	74F244SJ	IC	2	
IC901	NJM78L05UA	IC	1	
IC902	CF72417	IC	1	
IC903	TC7W125FU	IC	1	
IC954	MB40768PF	IC	1	
IC955,56	NJM78L05UA	IC	2	
IC957	NJM79L05UA	IC	1	
IC958	AD8047AR	IC	1	
IC959	MC74HC4053F	IC	1	
IC981	T160G70-1601	IC	1	
IC982,83	UPD42280G3	IC	2	
IC985,86	74F244SJ	IC	2	
L1,L2	VLP0133	COIL	2	
L51,52	VLP0133	COIL	2	
L251-54	VLQ0319K101	COIL 100UH	4	
L255	VLQ0133J471	COIL 470UH	1	
L256	VLQ0319K101	COIL 100UH	1	
L301,02	VLQ0319K101	COIL 100UH	2	
L351,52	VLQ0319K101	COIL 100UH	2	
L354	VLQ0163J270	COIL 27UH	1	
L355	VLQ0163J6R8	COIL 6.8UH	1	
L356	VLQ0163J5R6	COIL 5.6UH	1	
L401	VLQ0319K101	COIL 100UH	1	
L451-55	VLQ0319K101	COIL 100UH	5	
L456	VLQ0163J470	COIL 47UH	1	
L457,58	VLQ0163J560	COIL 56UH	2	
L501	VLQ0133J391	COIL 390UH	1	
L551	VLQ0163J3R3	COIL 3.3UH	1	
L601,02	VLQ0319K101	COIL 100UH	2	
L651	VLQ0133J821	COIL 820UH	1	
L652	VLQ0319K101	COIL 100UH	1	
L701	VLQ0133J821	COIL 820UH	1	
L751	VLQ0133J821	COIL 820UH	1	
L901	VLQ0319K101	COIL 100UH	1	
P1,P2	VJP3454B096	CONNECTOR (MALE)	2	
P41	VJP1246T	CONNECTOR (MALE) 6P	1	
Q251	2SB709A-R	TRANSISTOR	1	
Q252,53	2SD601A-R	TRANSISTOR	2	

Ref.No.	Part No.	Part Name & Description	Pcs	Remarks
Q301	2SB709A-R	TRANSISTOR	1	
Q302	2SD601A-R	TRANSISTOR	1	
Q303	2SK198-R	TRANSISTOR	1	
Q351	2SD601A-R	TRANSISTOR	1	
Q352	2SB709A-R	TRANSISTOR	1	
Q401,02	2SD601A-R	TRANSISTOR	2	
Q451-54	2SD601A-R	TRANSISTOR	4	
Q455-58	2SB709A-R	TRANSISTOR	4	
Q459-67	2SD601A-R	TRANSISTOR	9	
Q501,02	2SD601A-R	TRANSISTOR	2	
Q551	2SC3757-R	TRANSISTOR	1	
Q552,53	2SA1226E34	TRANSISTOR	2	
Q554	2SC3757-R	TRANSISTOR	1	
Q601-03	2SB709A-R	TRANSISTOR	3	
Q606-08	2SD601A-R	TRANSISTOR	3	
Q651	2SD601A-R	TRANSISTOR	1	
Q652-54	2SB709A-R	TRANSISTOR	3	
Q655	2SD601A-R	TRANSISTOR	1	
Q656	2SK198-R	TRANSISTOR	1	
Q657	2SD601A-R	TRANSISTOR	1	
Q701	2SD601A-R	TRANSISTOR	1	
Q702	2SB709A-R	TRANSISTOR	1	
Q703	2SD601A-R	TRANSISTOR	1	
Q704	2SB709A-R	TRANSISTOR	1	
Q705	2SD601A-R	TRANSISTOR	1	
Q706	2SK198-R	TRANSISTOR	1	
Q751	2SD601A-R	TRANSISTOR	1	
Q752	2SB709A-R	TRANSISTOR	1	
Q753	2SD601A-R	TRANSISTOR	1	
Q754	2SB709A-R	TRANSISTOR	1	
Q755	2SD601A-R	TRANSISTOR	1	
Q756	2SK198-R	TRANSISTOR	1	
Q951	2SD601A-R	TRANSISTOR	1	
Q952	2SB709A-R	TRANSISTOR	1	
Q953	2SD601A-R	TRANSISTOR	1	
Q954	2SB709A-R	TRANSISTOR	1	
QR151	MUN2212	TRANSISTOR-RESISTOR	1	
QR501	MUN2212	TRANSISTOR-RESISTOR	1	
R2-R8	ERJ6GEY0R00	M.RESISTOR CH 1/10W 0	7	
R10-22	ERJ6GEY0R00	M.RESISTOR CH 1/10W 0	13	
R24-75	ERJ6GEY0R00	M.RESISTOR CH 1/10W 0	52	
R101-12	ERJ6GEYG101	M.RESISTOR CH 1/10W 100	12	
R113	ERJ6GEY0R00	M.RESISTOR CH 1/10W 0	1	
R115,16	ERJ6GEYG101	M.RESISTOR CH 1/10W 100	2	
R118,19	ERJ6GEYG103	M.RESISTOR CH 1/10W 10K	2	
R120	ERJ6GEY0R00	M.RESISTOR CH 1/10W 0	1	
R131	ERJ6GEYG223	M.RESISTOR CH 1/10W 22K	1	
R132	ERJ6GEYF333	M.RESISTOR CH 1/10W 33K	1	
R133	ERJ6GEYG564	M.RESISTOR CH 1/10W 560K	1	
R134	ERJ6GEYG102	M.RESISTOR CH 1/10W 1K	1	
R135	ERJ6GEYG683	M.RESISTOR CH 1/10W 68K	1	
R136	ERJ6GEYG331	M.RESISTOR CH 1/10W 330	1	
R137	ERJ6GEYJ684	M.RESISTOR CH 1/10W 680K	1	
R138	ERJ6GEYG753	M.RESISTOR CH 1/10W 75	1	
R139	ERJ6GEYG104	M.RESISTOR CH 1/10W 100K	1	
R140	ERJ6GEYG103	M.RESISTOR CH 1/10W 10K	1	
R141	ERJ6GEYG682	M.REISITOR CH 1/10W 6.8K	1	
R142	ERJ6GEYG153	M.RESISTOR CH 1/10W 15K	1	
R143	ERJ6GEYF473	M.RESISTOR CH 1/10W 47K	1	
R146,47	ERJ6GEYG101	M.RESISTOR CH 1/10W 100	2	
R152-54	ERJ6GEYG470	M.RESISTOR CH 1/10W 47	3	
R159,60	ERJ6GEYG103	M.RESISTOR CH 1/10W 10K	2	
R163,64	ERJ6GEY0R00	M.RESISTOR CH 1/10W 0	2	
R165-68	ERJ6GEYG102	M.RESISTOR CH 1/10W 1K	4	
R170	ERJ6GEY0R00	M.RESISTOR CH 1/10W 0	1	
R172	ERJ6GEYG103	M.RESISTOR CH 1/10W 10K	1	
R173	ERJ6GEY0R00	M.RESISTOR CH 1/10W 0	1	
R175,76	ERJ6GEY0R00	M.RESISTOR CH 1/10W 0	2	
R177-79	ERJ6GEYG391	M.RESISTOR CH 1/10W 390	3	
R180	ERJ6GEYG332	M.RESISTOR CH 1/10W 3.3K	1	
R181-91	ERJ6GEYG391	M.RESISTOR CH 1/10W 390	11	
R192	ERJ6GEYG332	M.RESISTOR CH 1/10W 3.3K	1	
R193,94	ERJ6GEYG101	M.RESISTOR CH 1/10W 100	2	

Ref.No.	Part No.	Part Name & Description	Pcs	Remarks
R217-20	ERJ6GEYG101	M.RESISTOR CH 1/10W 100	4	
R251	ERJ6GEYG183	M.RESISTOR CH 1/10W 18K	1	
R252	ERJ6GEY0R00	M.RESISTOR CH 1/10W 0	1	
R253	ERJ6GEYG562	M.RESISTOR CH 1/10W 5.6K	1	
R254	ERJ6GEYG102	M.RESISTOR CH 1/10W 1K	1	
R255	ERJ6GEYG101	M.RESISTOR CH 1/10W 100	1	
R256	ERJ6GEYG331	M.RESISTOR CH 1/10W 330	1	
R257	ERJ6GEYG102	M.RESISTOR CH 1/10W 1K	1	
R258,59	ERJ6GEYF822	M.RESISTOR CH 1/10W 8.2K	2	
R260	ERJ6GEYG101	M.RESISTOR CH 1/10W 100	1	
R261	ERJ6GEYG331	M.RESISTOR CH 1/10W 330	1	
R262,63	ERJ6GEYG102	M.RESISTOR CH 1/10W 1K	2	
R264	ERJ6GEYF561	M.RESISTOR CH 1/10W 560	1	
R265	ERJ6GEYG102	M.RESISTOR CH 1/10W 1K	1	
R266	ERJ6GEYG222	M.RESISTOR CH 1/10W 2.2K	1	
R269	ERJ6GEYJ224	M.RESISTOR CH 1/10W 220K	1	
R270	ERJ6GEYJ684	M.RESISTOR CH 1/10W 680K	1	
R271-73	ERJ6GEYG103	M.RESISTOR CH 1/10W 10K	3	
R274	ERJ6GEY0R00	M.RESISTOR CH 1/10W 0	1	
R275	ERJ6GEYF333	M.RESISTOR CH 1/10W 33K	1	
R276	ERJ6GEYG562	M.RESISTOR CH 1/10W 5.6K	1	
R277	ERJ6GEYG392	M.RESISTOR CH 1/10W 3.9K	1	
R301	ERJ6GEYG394	M.RESISTOR CH 1/10W 390K	1	
R302	ERJ6GEYG154	M.RESISTOR CH 1/10W 150K	1	
R303	ERJ6GEYF561	M.RESISTOR CH 1/10W 560	1	
R304	ERJ6GEYG220	M.RESISTOR CH 1/10W 22	1	
R305	ERJ6GEYG102	M.RESISTOR CH 1/10W 1K	1	
R307	ERJ6GEYG152	M.RESISTOR CH 1/10W 1.5K	1	
R308	ERJ6GEYG122	M.RESISTOR CH 1/10W 1.2K	1	
R309,10	ERJ6GEYG101	M.RESISTOR CH 1/10W 100	2	
R311	ERJ6GEYG102	M.RESISTOR CH 1/10W 1K	1	
R313,14	ERJ6GEYG101	M.RESISTOR CH 1/10W 100	2	
R316,17	ERJ6GEYG103	M.RESISTOR CH 1/10W 10K	2	
R318	ERJ6GEY0R00	M.RESISTOR CH 1/10W 0	1	
R319	ERJ6GEYG682	M.REISITOR CH 1/10W 6.8K	1	
R353	ERJ6GEYG332	M.RESISTOR CH 1/10W 3.3K	1	
R354	ERJ6GEYG331	M.RESISTOR CH 1/10W 330	1	
R355	ERJ6GEYG121	M.RESISTOR CH 1/10W 120	1	
R356	ERJ6GEYG332	M.RESISTOR CH 1/10W 3.3K	1	
R357	ERJ6GEYG560	M.RESISTOR CH 1/10W 56	1	
R358	ERJ6GEYG101	M.RESISTOR CH 1/10W 100	1	
R359	ERJ6GEYG681	M.RESISTOR CH 1/10W 680	1	
R360	ERJ6GEYF561	M.RESISTOR CH 1/10W 560	1	
R362	ERJ6GEYG560	M.RESISTOR CH 1/10W 56	1	
R363	ERJ6GEYG101	M.RESISTOR CH 1/10W 100	1	
R365	ERJ6GEYG103	M.RESISTOR CH 1/10W 10K	1	
R366	ERJ6GEYG221	M.RESISTOR CH 1/10W 220	1	
R367	ERJ6GEYG103	M.RESISTOR CH 1/10W 10K	1	
R368	ERJ6GEYG391	M.RESISTOR CH 1/10W 390	1	
R369	ERJ6GEYG681	M.RESISTOR CH 1/10W 680	1	
R370	ERJ6GEYG101	M.RESISTOR CH 1/10W 100	1	
R371	ERJ6GEYG103	M.RESISTOR CH 1/10W 10K	1	
R373	ERJ6GEYG821	M.RESISTOR CH 1/10W 820	1	
R375	ERJ6GEYG391	M.RESISTOR CH 1/10W 390	1	
R376	ERJ6GEYG101	M.RESISTOR CH 1/10W 100	1	
R377	ERJ6GEYG681	M.RESISTOR CH 1/10W 680	1	
R379	ERJ6GEYG331	M.RESISTOR CH 1/10W 330	1	
R380	ERJ6GEYG102	M.RESISTOR CH 1/10W 1K	1	
R381,82	ERJ6GEYG101	M.RESISTOR CH 1/10W 100	2	
R384	ERJ6GEYG331	M.RESISTOR CH 1/10W 330	1	
R385	ERJ6GEYG102	M.RESISTOR CH 1/10W 1K	1	
R386	ERJ6GEYG101	M.RESISTOR CH 1/10W 100	1	
R387	ERJ6GEY0R00	M.RESISTOR CH 1/10W 0	1	
R390	ERJ6GEY0R00	M.RESISTOR CH 1/10W 0	1	
R393,94	ERJ6GEY0R00	M.RESISTOR CH 1/10W 0	2	
R395	ERJ6GEYG331	M.RESISTOR CH 1/10W 330	1	
R401	ERJ6GEYG103	M.RESISTOR CH 1/10W 10K	1	
R402	ERJ6GEYF472	M.RESISTOR CH 1/10W 4.7K	1	
R403	ERJ6GEYG103	M.RESISTOR CH 1/10W 10K	1	
R404	ERJ6GEYG101	M.RESISTOR CH 1/10W 100	1	
R405	ERJ6GEYG272	M.RESISTOR CH 1/10W 2.7K	1	
R406	ERJ6GEYG183	M.RESISTOR CH 1/10W 18K	1	
R407	ERJ6GEYF473	M.RESISTOR CH 1/10W 47K	1	
R408	ERJ6GEYF123	M.RESISTOR CH 1/10W 12K	1	
R409	ERJ6GEYG103	M.RESISTOR CH 1/10W 10K	1	

Ref.No.	Part No.	Part Name & Description	Pcs	Remarks
R410-12	ERJ6GEYG101	M.RESISTOR CH 1/10W 100	3	
R413	ERJ6GEYF333	M.RESISTOR CH 1/10W 33K	1	
R414	ERJ6GEYF472	M.RESISTOR CH 1/10W 4.7K	1	
R415	ERJ6GEYG332	M.RESISTOR CH 1/10W 3.3K	1	
R416	ERJ6GEYJ274	M.RESISTOR CH 1/10W 270K	1	
R417	ERJ6GEYF472	M.RESISTOR CH 1/10W 4.7K	1	
R418	ERJ6GEYG183	M.RESISTOR CH 1/10W 18K	1	
R419	ERJ6GEYG394	M.RESISTOR CH 1/10W 390K	1	
R420,21	ERJ6GEYG103	M.RESISTOR CH 1/10W 10K	2	
R422	ERJ6GEYF472	M.RESISTOR CH 1/10W 4.7K	1	
R423,24	ERJ6GEYG103	M.RESISTOR CH 1/10W 10K	2	
R426,27	ERJ6GEYG103	M.RESISTOR CH 1/10W 10K	2	
R428	ERJ6GEYG152	M.RESISTOR CH 1/10W 1.5K	1	
R429	ERJ6GEYG563	M.RESISTOR CH 1/10W 56K	1	
R430	ERJ6GEYF561	M.RESISTOR CH 1/10W 560	1	
R431	ERJ6GEYJ471	M.RESISTOR CH 1/10W 470	1	
R432	ERJ6GEYG102	M.RESISTOR CH 1/10W 1K	1	
R433,34	ERJ6GEYG103	M.RESISTOR CH 1/10W 10K	2	
R435,36	ERJ6GEY0R00	M.RESISTOR CH 1/10W 0	2	
R441,42	ERJ6GEYG222	M.RESISTOR CH 1/10W 2.2K	2	
R451	ERJ6GEYG102	M.RESISTOR CH 1/10W 1K	1	
R452	ERJ6GEYF472	M.RESISTOR CH 1/10W 4.7K	1	
R453	ERJ6GEYG223	M.RESISTOR CH 1/10W 22K	1	
R454	ERJ6GEYG821	M.RESISTOR CH 1/10W 820	1	
R455	ERJ6GEYG391	M.RESISTOR CH 1/10W 390	1	
R456	ERJ6GEYF561	M.RESISTOR CH 1/10W 560	1	
R457	ERJ6GEYF472	M.RESISTOR CH 1/10W 4.7K	1	
R458,59	ERJ6GEYG101	M.RESISTOR CH 1/10W 100	2	
R460,61	ERJ6GEYG102	M.RESISTOR CH 1/10W 1K	2	
R462	ERJ6GEYG103	M.RESISTOR CH 1/10W 10K	1	
R463	ERJ6GEYG101	M.RESISTOR CH 1/10W 100	1	
R464,65	ERJ6GEYG102	M.RESISTOR CH 1/10W 1K	2	
R466	ERJ6GEYF561	M.RESISTOR CH 1/10W 560	1	
R467	ERJ6GEYG821	M.RESISTOR CH 1/10W 820	1	
R468,69	ERJ6GEYF822	M.RESISTOR CH 1/10W 8.2K	2	
R470	ERJ6GEYG102	M.RESISTOR CH 1/10W 1K	1	
R471-74	ERJ6GEYG121	M.RESISTOR CH 1/10W 120	4	
R475-78	ERJ6GEYG332	M.RESISTOR CH 1/10W 3.3K	4	
R479	ERJ6GEYG153	M.RESISTOR CH 1/10W 15K	1	
R480,81	ERJ6GEYG101	M.RESISTOR CH 1/10W 100	2	
R482,83	ERJ6GEYG222	M.RESISTOR CH 1/10W 2.2K	2	
R484,85	ERJ6GEYG102	M.RESISTOR CH 1/10W 1K	2	
R486,87	ERJ6GEYG103	M.RESISTOR CH 1/10W 10K	2	
R488-91	ERJ6GEYG470	M.RESISTOR CH 1/10W 47	4	
R492-99	ERJ6GEYG152	M.RESISTOR CH 1/10W 1.5K	8	
R500-03	ERJ6GEY0R00	M.RESISTOR CH 1/10W 0	4	
R504-07	ERJ6GEYG470	M.RESISTOR CH 1/10W 47	4	
R508-11	ERJ6GEYG332	M.RESISTOR CH 1/10W 3.3K	4	
R512-15	ERJ6GEYG102	M.RESISTOR CH 1/10W 1K	4	
R516-19	ERJ6GEYF472	M.RESISTOR CH 1/10W 4.7K	4	
R520-23	ERJ6GEYG101	M.RESISTOR CH 1/10W 100	4	
R526	ERJ6GEYG103	M.RESISTOR CH 1/10W 10K	1	
R527	ERJ6GEYG222	M.RESISTOR CH 1/10W 2.2K	1	
R528	ERJ6GEYG103	M.RESISTOR CH 1/10W 10K	1	
R530	ERJ6GEYG102	M.RESISTOR CH 1/10W 1K	1	
R531	ERJ6GEYG222	M.RESISTOR CH 1/10W 2.2K	1	
R534	ERJ6GEYJ224	M.RESISTOR CH 1/10W 220K	1	
R535	ERJ6GEYJ684	M.RESISTOR CH 1/10W 680K	1	
R536-38	ERJ6GEYG103	M.RESISTOR CH 1/10W 10K	3	
R539	ERJ6GEYF473	M.RESISTOR CH 1/10W 47K	1	
R541	ERJ6GEYG103	M.RESISTOR CH 1/10W 10K	1	
R542	ERJ6GEYG392	M.RESISTOR CH 1/10W 3.9K	1	
R546	ERJ6GEYG102	M.RESISTOR CH 1/10W 1K	1	
R547	ERJ6GEYF472	M.RESISTOR CH 1/10W 4.7K	1	
R548	ERJ6GEY0R00	M.RESISTOR CH 1/10W 0	1	
R551	ERJ6GEYG103	M.RESISTOR CH 1/10W 10K	1	
R552	ERJ6GEYG223	M.RESISTOR CH 1/10W 22K	1	
R553	ERJ6GEYG222	M.RESISTOR CH 1/10W 2.2K	1	
R554	ERJ6GEYG682	M.REISITOR CH 1/10W 6.8K	1	
R555	ERJ6GEYF472	M.RESISTOR CH 1/10W 4.7K	1	
R556	ERJ6GEYG102	M.RESISTOR CH 1/10W 1K	1	
R557,58	ERJ6GEYF472	M.RESISTOR CH 1/10W 4.7K	2	
R559,60	ERJ6GEYG222	M.RESISTOR CH 1/10W 2.2K	2	
R561	ERJ6GEYG332	M.RESISTOR CH 1/10W 3.3K	1	
R562,63	ERJ6GEYG153	M.RESISTOR CH 1/10W 15K	2	

Ref.No.	Part No.	Part Name & Description	Pcs	Remarks
R564	ERJ6GEYG683	M.RESISTOR CH 1/10W 68K	1	
R565	ERJ6GEYG562	M.RESISTOR CH 1/10W 5.6K	1	
R566	ERJ6GEYG681	M.RESISTOR CH 1/10W 680	1	
R567	ERJ6GEY0R00	M.RESISTOR CH 1/10W 0	1	
R571	ERJ6GEYG332	M.RESISTOR CH 1/10W 3.3K	1	
R572	ERJ6GEYG682	M.REISITOR CH 1/10W 6.8K	1	
R573,74	ERJ6GEYG152	M.RESISTOR CH 1/10W 1.5K	2	
R575	ERJ6GEYG682	M.REISITOR CH 1/10W 6.8K	1	
R576	ERJ6GEYG103	M.RESISTOR CH 1/10W 10K	1	
R577	ERJ6GEYG101	M.RESISTOR CH 1/10W 100	1	
R578	ERJ6GEYG104	M.RESISTOR CH 1/10W 100K	1	
R579	ERJ6GEYG223	M.RESISTOR CH 1/10W 22K	1	
R581	ERJ6GEYG152	M.RESISTOR CH 1/10W 1.5K	1	
R582	ERJ6GEYG682	M.REISITOR CH 1/10W 6.8K	1	
R583	ERJ6GEY0R00	M.RESISTOR CH 1/10W 0	1	
R586	ERJ6GEY0R00	M.RESISTOR CH 1/10W 0	1	
R601-03	ERJ6GEYG102	M.RESISTOR CH 1/10W 1K	3	
R604-06	ERJ6GEYG152	M.RESISTOR CH 1/10W 1.5K	3	
R607	ERJ6GEYG101	M.RESISTOR CH 1/10W 100	1	
R609,10	ERJ6GEYG101	M.RESISTOR CH 1/10W 100	2	
R616-18	ERJ6GEYG152	M.RESISTOR CH 1/10W 1.5K	3	
R651	ERJ6GEYG101	M.RESISTOR CH 1/10W 100	1	
R652	ERJ6GEYG103	M.RESISTOR CH 1/10W 10K	1	
R653	ERJ6GEYG102	M.RESISTOR CH 1/10W 1K	1	
R654	ERJ6GEYG221	M.RESISTOR CH 1/10W 220	1	
R655	ERJ6GEYG331	M.RESISTOR CH 1/10W 330	1	
R656	ERJ6GEYG102	M.RESISTOR CH 1/10W 1K	1	
R657	ERJ6GEYG331	M.RESISTOR CH 1/10W 330	1	
R658	ERJ6GEYG152	M.RESISTOR CH 1/10W 1.5K	1	
R659	ERJ6GEYG394	M.RESISTOR CH 1/10W 390K	1	
R660	ERJ6GEYG154	M.RESISTOR CH 1/10W 150K	1	
R661	ERJ6GEYG181	M.RESISTOR CH 1/10W 180	1	
R662	ERJ6GEYG102	M.RESISTOR CH 1/10W 1K	1	
R664,65	ERJ6GEYG122	M.RESISTOR CH 1/10W 1.2K	2	
R666	ERJ6GEYG101	M.RESISTOR CH 1/10W 100	1	
R667	ERJ6GEYG102	M.RESISTOR CH 1/10W 1K	1	
R668,69	ERJ6GEYG101	M.RESISTOR CH 1/10W 100	2	
R670	ERJ6GEYG105	M.RESISTOR CH 1/10W 1M	1	
R671	ERJ6GEYG101	M.RESISTOR CH 1/10W 100	1	
R672	ERJ6GEYG103	M.RESISTOR CH 1/10W 10K	1	
R673	ERJ6GEYG105	M.RESISTOR CH 1/10W 1M	1	
R674	ERJ6GEYF333	M.RESISTOR CH 1/10W 33K	1	
R675	ERJ6GEY0R00	M.RESISTOR CH 1/10W 0	1	
R676	ERJ6GEYG222	M.RESISTOR CH 1/10W 2.2K	1	
R680	ERJ6GEYG102	M.RESISTOR CH 1/10W 1K	1	
R681	ERJ6GEYG681	M.RESISTOR CH 1/10W 680	1	
R682	ERJ6GEYG101	M.RESISTOR CH 1/10W 100	1	
R683	ERJ6GEYG102	M.RESISTOR CH 1/10W 1K	1	
R684	ERJ6GEYG101	M.RESISTOR CH 1/10W 100	1	
R701	ERJ6GEYG103	M.RESISTOR CH 1/10W 10K	1	
R702	ERJ6GEYG682	M.REISITOR CH 1/10W 6.8K	1	
R703	ERJ6GEYG273	M.RESISTOR CH 1/10W 27K	1	
R704	ERJ6GEYG152	M.RESISTOR CH 1/10W 1.5K	1	
R705,06	ERJ6GEYJ471	M.RESISTOR CH 1/10W 470	2	
R707,08	ERJ6GEYG152	M.RESISTOR CH 1/10W 1.5K	2	
R709	ERJ6GEYF561	M.RESISTOR CH 1/10W 560	1	
R710	ERJ6GEYG152	M.RESISTOR CH 1/10W 1.5K	1	
R711	ERJ6GEYF561	M.RESISTOR CH 1/10W 560	1	
R712	ERJ6GEYG394	M.RESISTOR CH 1/10W 390K	1	
R713	ERJ6GEYJ274	M.RESISTOR CH 1/10W 270K	1	
R714	ERJ6GEYG391	M.RESISTOR CH 1/10W 390	1	
R715	ERJ6GEYG102	M.RESISTOR CH 1/10W 1K	1	
R717	ERJ6GEYG272	M.RESISTOR CH 1/10W 2.7K	1	
R718	ERJ6GEYG122	M.RESISTOR CH 1/10W 1.2K	1	
R719	ERJ6GEYG101	M.RESISTOR CH 1/10W 100	1	
R720	ERJ6GEYG102	M.RESISTOR CH 1/10W 1K	1	
R721,22	ERJ6GEYG101	M.RESISTOR CH 1/10W 100	2	
R723	ERJ6GEYG105	M.RESISTOR CH 1/10W 1M	1	
R724	ERJ6GEYG101	M.RESISTOR CH 1/10W 100	1	
R725	ERJ6GEYG103	M.RESISTOR CH 1/10W 10K	1	
R726	ERJ6GEYG105	M.RESISTOR CH 1/10W 1M	1	
R727,28	ERJ6GEYF123	M.RESISTOR CH 1/10W 12K	2	
R729	ERJ6GEYG222	M.RESISTOR CH 1/10W 2.2K	1	
R731-38	ERJ6GEYG102	M.RESISTOR CH 1/10W 1K	8	
R751	ERJ6GEYG103	M.RESISTOR CH 1/10W 10K	1	

Ref.No.	Part No.	Part Name & Description	Pcs	Remarks
R752	ERJ6GEYG682	M.REISITOR CH 1/10W 6.8K	1	
R753	ERJ6GEYG273	M.RESISTOR CH 1/10W 27K	1	
R754	ERJ6GEYG152	M.RESISTOR CH 1/10W 1.5K	1	
R755,56	ERJ6GEYJ471	M.RESISTOR CH 1/10W 470	2	
R757,58	ERJ6GEYG152	M.RESISTOR CH 1/10W 1.5K	2	
R759	ERJ6GEYF561	M.RESISTOR CH 1/10W 560	1	
R760	ERJ6GEYG152	M.RESISTOR CH 1/10W 1.5K	1	
R761	ERJ6GEYF561	M.RESISTOR CH 1/10W 560	1	
R762	ERJ6GEYG394	M.RESISTOR CH 1/10W 390K	1	
R763	ERJ6GEYJ274	M.RESISTOR CH 1/10W 270K	1	
R764	ERJ6GEYG391	M.RESISTOR CH 1/10W 390	1	
R765	ERJ6GEYG102	M.RESISTOR CH 1/10W 1K	1	
R767	ERJ6GEYG272	M.RESISTOR CH 1/10W 2.7K	1	
R768	ERJ6GEYG122	M.RESISTOR CH 1/10W 1.2K	1	
R769	ERJ6GEYG101	M.RESISTOR CH 1/10W 100	1	
R770	ERJ6GEYG102	M.RESISTOR CH 1/10W 1K	1	
R771,72	ERJ6GEYG101	M.RESISTOR CH 1/10W 100	2	
R773	ERJ6GEYG105	M.RESISTOR CH 1/10W 1M	1	
R774	ERJ6GEYG101	M.RESISTOR CH 1/10W 100	1	
R775	ERJ6GEYG103	M.RESISTOR CH 1/10W 10K	1	
R776	ERJ6GEYG105	M.RESISTOR CH 1/10W 1M	1	
R777,78	ERJ6GEYF123	M.RESISTOR CH 1/10W 12K	2	
R779	ERJ6GEYG222	M.RESISTOR CH 1/10W 2.2K	1	
R781-88	ERJ6GEYG102	M.RESISTOR CH 1/10W 1K	8	
R801	ERJ6GEYG103	M.RESISTOR CH 1/10W 10K	1	
R803	ERJ6GEY0R00	M.RESISTOR CH 1/10W 0	1	
R806	ERJ6GEY0R00	M.RESISTOR CH 1/10W 0	1	
R808-10	ERJ6GEYG391	M.RESISTOR CH 1/10W 390	3	
R811	ERJ6GEYG332	M.RESISTOR CH 1/10W 3.3K	1	
R812-22	ERJ6GEYG391	M.RESISTOR CH 1/10W 390	11	
R823	ERJ6GEYG332	M.RESISTOR CH 1/10W 3.3K	1	
R851	ERJ6GEYG101	M.RESISTOR CH 1/10W 100	1	
R852	ERJ6GEYG271	M.RESISTOR CH 1/10W 270	1	
R853	ERJ6GEYG101	M.RESISTOR CH 1/10W 100	1	
R872,73	ERJ6GEYG101	M.RESISTOR CH 1/10W 100	2	
R901	ERJ6GEYG102	M.RESISTOR CH 1/10W 1K	1	
R903	ERJ6GEYG101	M.RESISTOR CH 1/10W 100	1	
R904,05	ERJ6GEYG470	M.RESISTOR CH 1/10W 47	2	
R906	ERJ6GEYG102	M.RESISTOR CH 1/10W 1K	1	
R961	ERJ6GEYG470	M.RESISTOR CH 1/10W 47	1	
R962	ERJ6GEYG222	M.RESISTOR CH 1/10W 2.2K	1	
R963	ERJ6GEYG102	M.RESISTOR CH 1/10W 1K	1	
R964	ERJ6GEY0R00	M.RESISTOR CH 1/10W 0	1	
R965	ERJ6GEYG122	M.RESISTOR CH 1/10W 1.2K	1	
R966	ERJ6GEYG102	M.RESISTOR CH 1/10W 1K	1	
R967	ERJ6GEYG101	M.RESISTOR CH 1/10W 100	1	
R968	ERJ6GEYG222	M.RESISTOR CH 1/10W 2.2K	1	
R969,70	ERJ6GEYG102	M.RESISTOR CH 1/10W 1K	2	
R971	ERJ6GEYG222	M.RESISTOR CH 1/10W 2.2K	1	
R972	ERJ6GEYG103	M.RESISTOR CH 1/10W 10K	1	
R973	ERJ6GEYG221	M.RESISTOR CH 1/10W 220	1	
R974	ERJ6GEYG681	M.RESISTOR CH 1/10W 680	1	
R985	ERJ6GEYG103	M.RESISTOR CH 1/10W 10K	1	
TG1-G6	VJR0646	TEST POINT	6	
TP301	VJR0646	TEST POINT	1	
TP401	VJR0646	TEST POINT	1	
TP402	EYF6CU	TEST POINT	1	
TP403	VJR0646	TEST POINT	1	
TP405	VJR0646	TEST POINT	1	
TP451	VJR0646	TEST POINT	1	
TP551-53	VJR0646	TEST POINT	3	
TP651	VJR0646	TEST POINT	1	
TP701	VJR0646	TEST POINT	1	
TP751	VJR0646	TEST POINT	1	
TP951	EYF6CU	TEST POINT	1	
TP952	VJR0646	TEST POINT	1	
VL551	VLQ0415	COIL	1	
VR251	EVMEGSA00B53	V.RESISTOR 5K	1	
VR301	EVMEGSA00B53	V.RESISTOR 5K	1	
VR351	EVMEGSA00B12	V.RESISTOR 100	1	
VR352	VRV0112B201	V.RESISTOR 200	1	

Ref.No.	Part No.	Part Name & Description	Pcs	Remarks
VR353,54	EVMEGSA00B52	V.RESISTOR 500	2	
VR406,07	EVMEGSA00B13	V.RESISTOR 1K	2	
VR408-10	EVMEGSA00B53	V.RESISTOR 5K	3	
VR459-66	EVMEGSA00B13	V.RESISTOR 1K	8	
VR551	EVMEGSA00B23	V.RESISTOR 2K	1	
VR552	EVMEGSA00B53	V.RESISTOR 5K	1	
VR651	EVMEGSA00B13	V.RESISTOR 1K	1	
VR652	EVMEGSA00B53	V.RESISTOR 5K	1	
VR701,02	EVMEGSA00B13	V.RESISTOR 1K	2	
VR703	EVMEGSA00B53	V.RESISTOR 5K	1	
VR751,52	EVMEGSA00B13	V.RESISTOR 1K	2	
VR753	EVMEGSA00B53	V.RESISTOR 5K	1	
VR952	EVMEGSA00B52	V.RESISTOR 500	1	
X401	VSX0270	CRYSTAL OSCILLATOR	1	
X901	VSX0949	CRYSTAL OSCILLATOR	1	
		MISCELLANEOUS		
	VML2143	CARD PULLER	1	
	VML2144	CARD PULLER	1	

Ref.No.	Part No.	Part Name & Description	Pcs	Remarks
■E7	VEP84326A	F7 A PROCESS P.C.BOARD	1	(RTL)
C1	ECEV1CV470Q	E.CAPACITOR CH 16V 47U	1	
C2	ECUM1H103KBN	C.CAPACITOR CH 50V 0.01U	1	
C3,C4	ECEV1CV470Q	E.CAPACITOR CH 16V 47U	2	
C5	ECUM1H103KBN	C.CAPACITOR CH 50V 0.01U	1	
C6,C7	ECEV1CV470Q	E.CAPACITOR CH 16V 47U	2	
C8	ECUM1H103KBN	C.CAPACITOR CH 50V 0.01U	1	
C9	ECEV1CV470Q	E.CAPACITOR CH 16V 47U	1	
C10	ECUM1H103KBN	C.CAPACITOR CH 50V 0.01U	1	
C15,16	ECUM1H102KBN	C.CAPACITOR CH 50V 1000P	2	
C20-31	ECUM1H103KBN	C.CAPACITOR CH 50V 0.01U	12	
C32	ECUX1E104KBN	C.CAPACITOR CH 25V 0.1U	1	
C33-35	ECUM1H103KBN	C.CAPACITOR CH 50V 0.01U	3	
C110-21	ECUM1H103KBN	C.CAPACITOR CH 50V 0.01U	12	
C122	ECKF1H182KB	C.CAPACITOR 50V 1800P	1	
C190-94	ECUM1H103KBN	C.CAPACITOR CH 50V 0.01U	5	
C220,21	ECUM1H103KBN	C.CAPACITOR CH 50V 0.01U	2	
C222,23	ECEV1CV470Q	E.CAPACITOR CH 16V 47U	2	
C224,25	ECUM1H103KBN	C.CAPACITOR CH 50V 0.01U	2	
C228,29	ECUM1H103KBN	C.CAPACITOR CH 50V 0.01U	2	
C231	ECUM1H103KBN	C.CAPACITOR CH 50V 0.01U	1	
C232-34	ECEV1HV0R1Q	E.CAPACITOR CH 50V 0.1U	3	
C235	ECEV1CV100Q	E.CAPACITOR CH 16V 10U	1	
C236	ECUM1H103KBN	C.CAPACITOR CH 50V 0.01U	1	
C237	ECEV1CV100Q	E.CAPACITOR CH 16V 10U	1	
C238	ECUM1H103KBN	C.CAPACITOR CH 50V 0.01U	1	
C239,40	ECUM1H470JCN	C.CAPACITOR CH 50V 47P	2	
C340-44	ECUM1H103KBN	C.CAPACITOR CH 50V 0.01U	5	
C345-47	ECUX1E104KBN	C.CAPACITOR CH 25V 0.1U	3	
C430	ECEV0JV330Q	E.CAPACITOR CH6.3V 33U	1	
C434	ECUM1H104ZFN	C.CAPACITOR CH 50V 0.1U	1	
C435	ECUX1H122KBN	C.CAPACITOR CH 50V 1200P	1	
C438	ECEV0JV330Q	E.CAPACITOR CH6.3V 33U	1	
C439,40	ECUM1H104ZFN	C.CAPACITOR CH 50V 0.1U	2	
C442-45	ECUM1H104ZFN	C.CAPACITOR CH 50V 0.1U	4	
C447-49	ECUM1H104ZFN	C.CAPACITOR CH 50V 0.1U	3	
C530	ECUM1H103KBN	C.CAPACITOR CH 50V 0.01U	1	
C531	ECUM1H180JCN	C.CAPACITOR CH 50V 18P	1	
C532,33	ECUM1H103KBN	C.CAPACITOR CH 50V 0.01U	2	
C534	ECUM1H180JCN	C.CAPACITOR CH 50V 18P	1	
C535-41	ECUM1H103KBN	C.CAPACITOR CH 50V 0.01U	7	
C651-56	ECUM1H103KBN	C.CAPACITOR CH 50V 0.01U	6	
C657	ECEV1CV470Q	E.CAPACITOR CH 16V 47U	1	
C658	ECUM1H103KBN	C.CAPACITOR CH 50V 0.01U	1	
C659	ECUX1E104KBN	C.CAPACITOR CH 25V 0.1U	1	
C750-52	ECUM1H103KBN	C.CAPACITOR CH 50V 0.01U	3	
C800	ECUM1H103KBN	C.CAPACITOR CH 50V 0.01U	1	
C820	ECUM1H103KBN	C.CAPACITOR CH 50V 0.01U	1	
C821	ECUX1E104KBN	C.CAPACITOR CH 25V 0.1U	1	
C822	ECUM1H103KBN	C.CAPACITOR CH 50V 0.01U	1	
C823	ECEV1CV470Q	E.CAPACITOR CH 16V 47U	1	
C824,25	ECUX1E104KBN	C.CAPACITOR CH 25V 0.1U	2	
C826	ECUM1H103KBN	C.CAPACITOR CH 50V 0.01U	1	
C827	ECUM1H121JCN	C.CAPACITOR CH 50V 120P	1	
C829	ECEV1CV100Q	E.CAPACITOR CH 16V 10U	1	
C832,33	ECUM1H103KBN	C.CAPACITOR CH 50V 0.01U	2	
C834	ECUM1H101JCN	C.CAPACITOR CH 50V 100P	1	
C835,36	ECUM1H103KBN	C.CAPACITOR CH 50V 0.01U	2	
C837	ECEV1HN4R7Q	E.CAPACITOR CH 50V 4.7U	1	
C838	ECUM1H103KBN	C.CAPACITOR CH 50V 0.01U	1	
C839	ECUX1E104KBN	C.CAPACITOR CH 25V 0.1U	1	
C840-42	ECUM1H103KBN	C.CAPACITOR CH 50V 0.01U	3	
C843	ECEV1HN4R7Q	E.CAPACITOR CH 50V 4.7U	1	
C920-27	ECUM1H103KBN	C.CAPACITOR CH 50V 0.01U	8	
C930	ECUM1H103KBN	C.CAPACITOR CH 50V 0.01U	1	
C970	ECUM1H104ZFN	C.CAPACITOR CH 50V 0.1U	1	
C971	ECEV0JV470Q	E.CAPACITOR CH6.3V 47U	1	
C972	ECUM1H103KBN	C.CAPACITOR CH 50V 0.01U	1	
C973,74	ECUX1H221KBN	C.CAPACITOR CH 50V 220P	2	
D820,21	MA152A	DIODE	2	
D822,23	MA157	DIODE	2	

Ref.No.	Part No.	Part Name & Description	Pcs	Remarks
FL1	VLF0576	FILTER	1	
FL431	VLF0941C223	FILTER	1	
IC15	MC10H125M	IC	1	
IC16	MC74HC541AF	IC	1	
IC17	MC74HC574AF	IC	1	
IC18	MC74HC541AF	IC	1	
IC19	MC74HC153F	IC	1	
IC20	T74HCT541AF	IC	1	
IC21	MC74HC08AF	IC	1	
IC22	TVHT244F	IC	1	
IC23	MC74HC74AF	IC	1	
IC24-26	MC74HC541AF	IC	3	
IC27	MC10H124M	IC	1	
IC110,11	SN74S1051NS	IC	2	
IC112	74F541SJ	IC	1	
IC113	74F245SJ	IC	1	
IC114,15	74F541SJ	IC	2	
IC116,17	74AC138SJ	IC	2	
IC118,19	UPD71055GB	IC	2	
IC120	74F32SJ	IC	1	
IC121	74AC04SJ	IC	1	
IC190	MC74HC540AF	IC	1	
IC191-93	MC74HC541AF	IC	3	
IC194	MC74HC04AF	IC	1	
IC220	74AC04SJ	IC	1	
IC221	MC74HC74AF	IC	1	
IC224,25	NJM78L05UA	IC	2	
IC226,27	MC4044M	IC	2	
IC229	NJM319M	IC	1	
IC340	EPF10K20TC-4	IC	1	
IC341	S80726ANDP	IC	1	
IC342	VSI2997B	IC	1	
IC343,44	UPD42280G3	IC	2	
IC430	XC62FP3302P	IC	1	
IC434	M5256DVP10VL	IC	1	
IC435	UPD65845G068	IC	1	
IC436	M5256DVP10VL	IC	1	
IC530	MC74HC157AF	IC	1	
IC531	AD1893JST	IC	1	
IC532	K6256DLG7L	IC	1	
IC533	T16GH7AF1216	IC	1	
IC534	K6256DLG7L	IC	1	
IC535	MC74HC74AF	IC	1	
IC536	MC74HC157AF	IC	1	
IC651	EPF10K20TC-4	IC	1	
IC652	M5M417800DJ6	IC	1	
IC653	VSI2999A	IC	1	
IC654	S80726ANDP	IC	1	
IC750	MB621926	IC	1	
IC751	MB814400C70L	IC	1	
IC800	MC74HC157AF	IC	1	
IC820	74AC04SJ	IC	1	
IC821	MC74HC08AF	IC	1	
IC822	MC74HC74AF	IC	1	
IC823	DS9637ACN	IC	1	
IC825	NJM78L05UA	IC	1	
IC826	SN75158P	IC	1	
IC920	MC74HC08AF	IC	1	
IC921	MB87D136APFV	IC	1	
IC924	MC74HC74AF	IC	1	
IC970	TL7705CPSB	IC	1	
IS342	VJS3096308	CONNECTOR (FEMALE)	1	
IS653	VJS3096308	CONNECTOR (FEMALE)	1	
L1,L2	VLP0133	COIL	2	
P1,P2	VJP3454B096	CONNECTOR (MALE)	2	
Q820	2SJ163-Q	TRANSISTOR	1	
Q821-23	2SC2480	TRANSISTOR	3	
R15,16	ERJ6GEY0R00	M.RESISTOR CH 1/10W 0	2	

Ref.No.	Part No.	Part Name & Description	Pcs	Remarks
R17,18	ERJ6GEYG101	M.RESISTOR CH 1/10W 100	2	
R20	ERJ6GEYG103	M.RESISTOR CH 1/10W 10K	1	
R21	ERJ6GEYG331	M.RESISTOR CH 1/10W 330	1	
R22	ERJ6GEYG103	M.RESISTOR CH 1/10W 10K	1	
R23-32	ERJ6GEY0R00	M.RESISTOR CH 1/10W 0	10	
R34-36	ERJ6GEY0R00	M.RESISTOR CH 1/10W 0	3	
R37-39	ERJ6GEYG331	M.RESISTOR CH 1/10W 330	3	
R41,42	ERJ6GEY0R00	M.RESISTOR CH 1/10W 0	2	
R44-50	ERJ6GEY0R00	M.RESISTOR CH 1/10W 0	7	
R51	ERJ6GEYG331	M.RESISTOR CH 1/10W 330	1	
R55	ERJ6GEYG103	M.RESISTOR CH 1/10W 10K	1	
R56	ERJ6GEYG102	M.RESISTOR CH 1/10W 1K	1	
R57	ERJ6GEYF472	M.RESISTOR CH 1/10W 4.7K	1	
R60,61	ERJ6GEYG103	M.RESISTOR CH 1/10W 10K	2	
R62-64	ERJ6GEYG331	M.RESISTOR CH 1/10W 330	3	
R65	ERJ6GEYG471	M.RESISTOR CH 1/10W 470	1	
R66-73	ERJ6GEYG470	M.RESISTOR CH 1/10W 47	8	
R74	ERJ6GEYG471	M.RESISTOR CH 1/10W 470	1	
R75-83	ERJ6GEYG470	M.RESISTOR CH 1/10W 47	9	
R84,85	ERJ6GEYG471	M.RESISTOR CH 1/10W 470	2	
R86	ERJ6GEYG470	M.RESISTOR CH 1/10W 47	1	
R92-94	ERJ6GEY0R00	M.RESISTOR CH 1/10W 0	3	
R96	ERJ6GEY0R00	M.RESISTOR CH 1/10W 0	1	
R103	ERJ6GEY0R00	M.RESISTOR CH 1/10W 0	1	
R104-06	ERJ6GEYG103	M.RESISTOR CH 1/10W 10K	3	
R107-09	ERJ6GEY0R00	M.RESISTOR CH 1/10W 0	3	
R110-32	ERJ6GEYG470	M.RESISTOR CH 1/10W 47	23	
R133-36	ERJ6GEYG331	M.RESISTOR CH 1/10W 330	4	
R137-40	ERJ6GEYG332	M.RESISTOR CH 1/10W 3.3K	4	
R141-46	ERJ6GEYG152	M.RESISTOR CH 1/10W 1.5K	6	
R147-50	ERJ6GEYG332	M.RESISTOR CH 1/10W 3.3K	4	
R151-55	ERJ6GEYG152	M.RESISTOR CH 1/10W 1.5K	5	
R156	ERJ6GEYG470	M.RESISTOR CH 1/10W 47	1	
R157	ERJ6GEYG103	M.RESISTOR CH 1/10W 10K	1	
R158	ERJ6GEYG470	M.RESISTOR CH 1/10W 47	1	
R159	ERJ6GEYG103	M.RESISTOR CH 1/10W 10K	1	
R161-64	ERJ6GEYG103	M.RESISTOR CH 1/10W 10K	4	
R165	ERJ6GEY0R00	M.RESISTOR CH 1/10W 0	1	
R167,68	ERJ6GEYG103	M.RESISTOR CH 1/10W 10K	2	
R190	ERJ6GEY0R00	M.RESISTOR CH 1/10W 0	1	
R193-96	ERJ6GEYG331	M.RESISTOR CH 1/10W 330	4	
R199	ERJ6GEY0R00	M.RESISTOR CH 1/10W 0	1	
R220,21	ERJ6GEYG152	M.RESISTOR CH 1/10W 1.5K	2	
R222	ERJ6GEYG562	M.RESISTOR CH 1/10W 5.6K	1	
R223	ERJ6GEYG392	M.RESISTOR CH 1/10W 3.9K	1	
R224,25	ERJ6GEYG102	M.RESISTOR CH 1/10W 1K	2	
R226,27	ERJ6GEYG101	M.RESISTOR CH 1/10W 100	2	
R228,29	ERJ6GEYG103	M.RESISTOR CH 1/10W 10K	2	
R232,33	ERJ6GEYG103	M.RESISTOR CH 1/10W 10K	2	
R236	ERJ6GEY0R00	M.RESISTOR CH 1/10W 0	1	
R237	ERJ6GEYG332	M.RESISTOR CH 1/10W 3.3K	1	
R239	ERJ6GEYG332	M.RESISTOR CH 1/10W 3.3K	1	
R240	ERJ6GEYG331	M.RESISTOR CH 1/10W 330	1	
R241	ERJ6GEYF123	M.RESISTOR CH 1/10W 12K	1	
R242	ERJ6GEYG332	M.RESISTOR CH 1/10W 3.3K	1	
R243	ERJ6GEYG682	M.REISITOR CH 1/10W 6.8K	1	
R244	ERJ6GEYG331	M.RESISTOR CH 1/10W 330	1	
R245	ERJ6GEYG332	M.RESISTOR CH 1/10W 3.3K	1	
R246	ERJ6GEYF123	M.RESISTOR CH 1/10W 12K	1	
R320,21	ERJ6GEY0R00	M.RESISTOR CH 1/10W 0	2	
R340,41	ERJ6GEYG102	M.RESISTOR CH 1/10W 1K	2	
R342-45	ERJ6GEY0R00	M.RESISTOR CH 1/10W 0	4	
R348-50	ERJ6GEY0R00	M.RESISTOR CH 1/10W 0	3	
R351-56	ERJ6GEYG102	M.RESISTOR CH 1/10W 1K	6	
R357	ERJ6GEY0R00	M.RESISTOR CH 1/10W 0	1	
R359-61	ERJ6GEY0R00	M.RESISTOR CH 1/10W 0	3	
R395	ERJ6GEY0R00	M.RESISTOR CH 1/10W 0	1	
R397	ERJ6GEY0R00	M.RESISTOR CH 1/10W 0	1	
R399	ERJ6GEY0R00	M.RESISTOR CH 1/10W 0	1	
R401	ERJ6GEY0R00	M.RESISTOR CH 1/10W 0	1	
R431	ERJ6GEYF123	M.RESISTOR CH 1/10W 12K	1	
R434	ERJ6GEY0R00	M.RESISTOR CH 1/10W 0	1	
R437-39	ERJ6GEY0R00	M.RESISTOR CH 1/10W 0	3	
R446	ERJ6GEY0R00	M.RESISTOR CH 1/10W 0	1	
R450	ERJ6GEYG102	M.RESISTOR CH 1/10W 1K	1	

Ref.No.	Part No.	Part Name & Description	Pcs	Remarks
R452	ERJ6GEYG102	M.RESISTOR CH 1/10W 1K	1	
R453-56	ERJ6GEY0R00	M.RESISTOR CH 1/10W 0	4	
R458	ERJ6GEYG102	M.RESISTOR CH 1/10W 1K	1	
R459,60	ERJ6GEY0R00	M.RESISTOR CH 1/10W 0	2	
R462	ERJ6GEYG102	M.RESISTOR CH 1/10W 1K	1	
R531	ERJ6GEYG103	M.RESISTOR CH 1/10W 10K	1	
R532	ERJ6GEY0R00	M.RESISTOR CH 1/10W 0	1	
R533	ERJ6GEYG103	M.RESISTOR CH 1/10W 10K	1	
R534	ERJ6GEYG331	M.RESISTOR CH 1/10W 330	1	
R536	ERJ6GEY0R00	M.RESISTOR CH 1/10W 0	1	
R537	ERJ6GEYG331	M.RESISTOR CH 1/10W 330	1	
R538,39	ERJ6GEY0R00	M.RESISTOR CH 1/10W 0	2	
R540-43	ERJ6GEYG102	M.RESISTOR CH 1/10W 1K	4	
R544	ERJ6GEYG331	M.RESISTOR CH 1/10W 330	1	
R546	ERJ6GEY0R00	M.RESISTOR CH 1/10W 0	1	
R548	ERJ6GEY0R00	M.RESISTOR CH 1/10W 0	1	
R549	ERJ6GEYG331	M.RESISTOR CH 1/10W 330	1	
R550	ERJ6GEY0R00	M.RESISTOR CH 1/10W 0	1	
R554	ERJ6GEYG331	M.RESISTOR CH 1/10W 330	1	
R555,56	ERJ6GEY0R00	M.RESISTOR CH 1/10W 0	2	
R557	ERJ6GEYG331	M.RESISTOR CH 1/10W 330	1	
R558	ERJ6GEY0R00	M.RESISTOR CH 1/10W 0	1	
R560	ERJ6GEY0R00	M.RESISTOR CH 1/10W 0	1	
R561	ERJ6GEYG331	M.RESISTOR CH 1/10W 330	1	
R564	ERJ6GEY0R00	M.RESISTOR CH 1/10W 0	1	
R577-80	ERJ6GEY0R00	M.RESISTOR CH 1/10W 0	4	
R581-85	ERJ6GEYG103	M.RESISTOR CH 1/10W 10K	5	
R586	ERJ6GEY0R00	M.RESISTOR CH 1/10W 0	1	
R601	ERJ6GEY0R00	M.RESISTOR CH 1/10W 0	1	
R603,04	ERJ6GEYG104	M.RESISTOR CH 1/10W 100K	2	
R605	ERJ6GEY0R00	M.RESISTOR CH 1/10W 0	1	
R608	ERJ6GEY0R00	M.RESISTOR CH 1/10W 0	1	
R609	ERJ6GEYG104	M.RESISTOR CH 1/10W 100K	1	
R610	ERJ6GEYG331	M.RESISTOR CH 1/10W 330	1	
R655	ERJ6GEY0R00	M.RESISTOR CH 1/10W 0	1	
R658	ERJ6GEY0R00	M.RESISTOR CH 1/10W 0	1	
R660	ERJ6GEY0R00	M.RESISTOR CH 1/10W 0	1	
R664	ERJ6GEY0R00	M.RESISTOR CH 1/10W 0	1	
R666,67	ERJ6GEY0R00	M.RESISTOR CH 1/10W 0	2	
R668-71	ERJ6GEYG470	M.RESISTOR CH 1/10W 47	4	
R672-75	ERJ6GEY0R00	M.RESISTOR CH 1/10W 0	4	
R676-83	ERJ6GEYG470	M.RESISTOR CH 1/10W 47	8	
R684-87	ERJ6GEY0R00	M.RESISTOR CH 1/10W 0	4	
R690	ERJ6GEY0R00	M.RESISTOR CH 1/10W 0	1	
R691-95	ERJ6GEYG102	M.RESISTOR CH 1/10W 1K	5	
R696-98	ERJ6GEY0R00	M.RESISTOR CH 1/10W 0	3	
R700	ERJ6GEY0R00	M.RESISTOR CH 1/10W 0	1	
R702-04	ERJ6GEYG102	M.RESISTOR CH 1/10W 1K	3	
R721	ERJ6GEY0R00	M.RESISTOR CH 1/10W 0	1	
R723-26	ERJ6GEY0R00	M.RESISTOR CH 1/10W 0	4	
R728	ERJ6GEY0R00	M.RESISTOR CH 1/10W 0	1	
R752	ERJ6GEY0R00	M.RESISTOR CH 1/10W 0	1	
R754	ERJ6GEY0R00	M.RESISTOR CH 1/10W 0	1	
R755,56	ERJ6GEYG331	M.RESISTOR CH 1/10W 330	2	
R758	ERJ6GEYG103	M.RESISTOR CH 1/10W 10K	1	
R760	ERJ6GEYG103	M.RESISTOR CH 1/10W 10K	1	
R762,63	ERJ6GEYG103	M.RESISTOR CH 1/10W 10K	2	
R765	ERJ6GEYG103	M.RESISTOR CH 1/10W 10K	1	
R767	ERJ6GEYG103	M.RESISTOR CH 1/10W 10K	1	
R769	ERJ6GEYG103	M.RESISTOR CH 1/10W 10K	1	
R771	ERJ6GEYG103	M.RESISTOR CH 1/10W 10K	1	
R773	ERJ6GEYG103	M.RESISTOR CH 1/10W 10K	1	
R775	ERJ6GEYG103	M.RESISTOR CH 1/10W 10K	1	
R777	ERJ6GEYG103	M.RESISTOR CH 1/10W 10K	1	
R779	ERJ6GEYG103	M.RESISTOR CH 1/10W 10K	1	
R800	ERJ6GEYG331	M.RESISTOR CH 1/10W 330	1	
R803	ERJ6GEY0R00	M.RESISTOR CH 1/10W 0	1	
R820	ERJ6GEY0R00	M.RESISTOR CH 1/10W 0	1	
R822	ERJ6GEYF561	M.RESISTOR CH 1/10W 560	1	
R823,24	ERJ6GEYG332	M.RESISTOR CH 1/10W 3.3K	2	
R825	ERJ6RBD111	M.RESISTOR CH 1/10W 110	1	
R826	ERJ6GEYG822	M.RESISTOR CH 1/10W 8.2K	1	
R829	ERJ6GEYG103	M.RESISTOR CH 1/10W 10K	1	
R830	ERJ6GEYG102	M.RESISTOR CH 1/10W 1K	1	
R833	ERJ6GEYG101	M.RESISTOR CH 1/10W 100	1	

Ref.No.	Part No.	Part Name & Description	Pcs	Remarks
R838	ERJ6GEYG105	M.RESISTOR CH 1/10W 1M	1	
R840	ERJ6GEY0R00	M.RESISTOR CH 1/10W 0	1	
R842	ERJ6RED560	M.RESISTOR CH 1/10W 56	1	
R843	ERJ6GEY0R00	M.RESISTOR CH 1/10W 0	1	
R847	ERJ6GEYG332	M.RESISTOR CH 1/10W 3.3K	1	
R848	ERJ6RED560	M.RESISTOR CH 1/10W 56	1	
R895,96	ERJ6GEY0R00	M.RESISTOR CH 1/10W 0	2	
R900	ERJ6GEY0R00	M.RESISTOR CH 1/10W 0	1	
R921	ERJ6GEY0R00	M.RESISTOR CH 1/10W 0	1	
R924	ERJ6GEY0R00	M.RESISTOR CH 1/10W 0	1	
R926-28	ERJ6GEY0R00	M.RESISTOR CH 1/10W 0	3	
R930	ERJ6GEY0R00	M.RESISTOR CH 1/10W 0	1	
R932,33	ERJ6GEY0R00	M.RESISTOR CH 1/10W 0	2	
R938	ERJ6GEY0R00	M.RESISTOR CH 1/10W 0	1	
R942	ERJ6GEY0R00	M.RESISTOR CH 1/10W 0	1	
R944	ERJ6GEY0R00	M.RESISTOR CH 1/10W 0	1	
R948	ERJ6GEYG102	M.RESISTOR CH 1/10W 1K	1	
R950	ERJ6GEY0R00	M.RESISTOR CH 1/10W 0	1	
R953	ERJ6GEY0R00	M.RESISTOR CH 1/10W 0	1	
R955	ERJ6GEY0R00	M.RESISTOR CH 1/10W 0	1	
R970	ERJ6GEYG103	M.RESISTOR CH 1/10W 10K	1	
R972	ERJ6GEYG103	M.RESISTOR CH 1/10W 10K	1	
SW751	VSS0367-08B	SWITCH	1	
T820,21	VLT0890	TRANSFORMER	2	
TG1-G6	VJR0646	TEST POINT	6	
TG260	VJR0646	TEST POINT	1	
TP15,16	EYF6CU	TEST POINT	2	
TP190,91	VJR0646	TEST POINT	2	
TP193,94	VJR0646	TEST POINT	2	
TP220-23	VJR0646	TEST POINT	4	
TP340-49	EYF6CU	TEST POINT	10	
VR260,61	EVMEGSA00B13	V.RESISTOR 1K	2	
X220	VSX0967	CRYSTAL OSCILLATOR	1	
X221	VSX0968	CRYSTAL OSCILLATOR	1	
X530	VSX0519	CRYSTAL OSCILLATOR	1	
X820	VSX0968	CRYSTAL OSCILLATOR	1	
		MISCELLANEOUS		
	VML2143	CARD PULLER	1	
	VML2144	CARD PULLER	1	
■E8	VEP84301B	F8 A AD/DA P.C.BOARD	1	(RTL)
C4001,02	ECUM1E104ZFN	C.CAPACITOR CH 25V 0.1U	2	
C4003	ECEA1HGE330	E.CAPACITOR 50V 33U	1	
C4004	ECUM1E104ZFN	C.CAPACITOR CH 25V 0.1U	1	
C4005	ECEV1CV470Q	E.CAPACITOR CH 16V 47U	1	
C4006	ECUM1E104ZFN	C.CAPACITOR CH 25V 0.1U	1	
C4007	ECEV1CV470Q	E.CAPACITOR CH 16V 47U	1	
C4009	ECEA1HGE330	E.CAPACITOR 50V 33U	1	
C4011	ECUM1H820JCN	C.CAPACITOR CH 50V 82P	1	
C4012	ECEV1CN100Q	E.CAPACITOR CH 16V 10U	1	
C4013	ECUM1E104ZFN	C.CAPACITOR CH 25V 0.1U	1	
C4014	ECHU1C472G	P.CAPACITOR 16V 4700P	1	
C4015	ECUM1H330JCN	C.CAPACITOR CH 50V 33P	1	
C4016,17	ECUM1H103KBN	C.CAPACITOR CH 50V 0.01U	2	
C4018	ECUX1H561JCN	C.CAPACITOR CH 50V 560P	1	
C4019	ECUM1H182KBN	C.CAPACITOR CH 50V 1800P	1	
C4020	ECUM1H101JCN	C.CAPACITOR CH 50V 100P	1	
C4021	ECEV1CN100Q	E.CAPACITOR CH 16V 10U	1	
C4041,42	ECUM1E104ZFN	C.CAPACITOR CH 25V 0.1U	2	
C4043	ECEA1HGE330	E.CAPACITOR 50V 33U	1	
C4044,45	ECUM1E104ZFN	C.CAPACITOR CH 25V 0.1U	2	
C4046,47	ECEV1CV470Q	E.CAPACITOR CH 16V 47U	2	
C4049	ECEA1HGE330	E.CAPACITOR 50V 33U	1	
C4051	ECUM1H820JCN	C.CAPACITOR CH 50V 82P	1	

Ref.No.	Part No.	Part Name & Description	Pcs	Remarks
C4052	ECUM1E104ZFN	C.CAPACITOR CH 25V 0.1U	1	
C4053	ECEV1CN100Q	E.CAPACITOR CH 16V 10U	1	
C4054	ECHU1C472G	P.CAPACITOR 16V 4700P	1	
C4055	ECUM1H330JCN	C.CAPACITOR CH 50V 33P	1	
C4056,57	ECUM1H103KBN	C.CAPACITOR CH 50V 0.01U	2	
C4058	ECUX1H561JCN	C.CAPACITOR CH 50V 560P	1	
C4059	ECUM1H182KBN	C.CAPACITOR CH 50V 1800P	1	
C4060	ECUM1H101JCN	C.CAPACITOR CH 50V 100P	1	
C4061	ECEV1CN100Q	E.CAPACITOR CH 16V 10U	1	
C4201,02	ECUM1E104ZFN	C.CAPACITOR CH 25V 0.1U	2	
C4203	ECEV0JV101Q	E.CAPACITOR CH6.3V 100U	1	
C4204	ECUM1E104ZFN	C.CAPACITOR CH 25V 0.1U	1	
C4205	ECEV1CV100Q	E.CAPACITOR CH 16V 10U	1	
C4206	ECUM1E104ZFN	C.CAPACITOR CH 25V 0.1U	1	
C4207	ECEV1CV100Q	E.CAPACITOR CH 16V 10U	1	
C4208,09	ECEV1CV220Q	E.CAPACITOR CH 16V 22U	2	
C4211	ECUM1H330JCN	C.CAPACITOR CH 50V 33P	1	
C4212	ECUM1E104ZFN	C.CAPACITOR CH 25V 0.1U	1	
C4213	ECEV0JV470Q	E.CAPACITOR CH6.3V 47U	1	
C4214	ECUM1H330JCN	C.CAPACITOR CH 50V 33P	1	
C4215	ECUM1E104ZFN	C.CAPACITOR CH 25V 0.1U	1	
C4216	ECEV0JV470Q	E.CAPACITOR CH6.3V 47U	1	
C4217,18	ECUM1H330JCN	C.CAPACITOR CH 50V 33P	2	
C4219,20	ECUM1H152KBN	C.CAPACITOR CH 50V 1500P	2	
C4221,22	ECEV1CV100Q	E.CAPACITOR CH 16V 10U	2	
C4223-26	ECUM1E104ZFN	C.CAPACITOR CH 25V 0.1U	4	
C4227	ECEV1CV100Q	E.CAPACITOR CH 16V 10U	1	
C4228	ECUM1E104ZFN	C.CAPACITOR CH 25V 0.1U	1	
C4301	ECEV1CV470Q	E.CAPACITOR CH 16V 47U	1	
C4302	ECUM1E104ZFN	C.CAPACITOR CH 25V 0.1U	1	
C4303	ECEV0JV101Q	E.CAPACITOR CH6.3V 100U	1	
C4304	ECUM1E104ZFN	C.CAPACITOR CH 25V 0.1U	1	
C4305	ECEV1CV100Q	E.CAPACITOR CH 16V 10U	1	
C4306	ECEV1CV220Q	E.CAPACITOR CH 16V 22U	1	
C4307	ECUM1E104ZFN	C.CAPACITOR CH 25V 0.1U	1	
C4308	ECEV1CV220Q	E.CAPACITOR CH 16V 22U	1	
C4309	ECUM1E104ZFN	C.CAPACITOR CH 25V 0.1U	1	
C4310	ECUM1H103KBN	C.CAPACITOR CH 50V 0.01U	1	
C4311-13	ECUM1E104ZFN	C.CAPACITOR CH 25V 0.1U	3	
C4314	ECEV1CV100Q	E.CAPACITOR CH 16V 10U	1	
C4315	ECUM1E104ZFN	C.CAPACITOR CH 25V 0.1U	1	
C4316	ECEV0JV101Q	E.CAPACITOR CH6.3V 100U	1	
C4317,18	ECEV1CN100Q	E.CAPACITOR CH 16V 10U	2	
C4319,20	ECUM1H103KBN	C.CAPACITOR CH 50V 0.01U	2	
C4321,22	ECUM1H221JCN	C.CAPACITOR CH 50V 220P	2	
C4323,24	ECUM1H103KBN	C.CAPACITOR CH 50V 0.01U	2	
C4325	ECUM1E104ZFN	C.CAPACITOR CH 25V 0.1U	1	
C4401	ECHU1C472G	P.CAPACITOR 16V 4700P	1	
C4402,03	ECUM1E104ZFN	C.CAPACITOR CH 25V 0.1U	2	
C4404	ECEV1CN100Q	E.CAPACITOR CH 16V 10U	1	
C4405,06	ECUM1E104ZFN	C.CAPACITOR CH 25V 0.1U	2	
C4407,08	ECEV1CV470Q	E.CAPACITOR CH 16V 47U	2	
C4409,10	ECUM1H103KBN	C.CAPACITOR CH 50V 0.01U	2	
C4411	ECEV1CV100Q	E.CAPACITOR CH 16V 10U	1	
C4412	ECUM1H470JCN	C.CAPACITOR CH 50V 47P	1	
C4413	ECUM1H103KBN	C.CAPACITOR CH 50V 0.01U	1	
C4414,15	ECEV1CV100Q	E.CAPACITOR CH 16V 10U	2	
C4416	ECUM1H270JCN	C.CAPACITOR CH 50V 27P	1	
C4417	ECUM1H103KBN	C.CAPACITOR CH 50V 0.01U	1	
C4418	ECEV1CV100Q	E.CAPACITOR CH 16V 10U	1	
C4419,20	ECEA1CGE221	E.CAPACITOR 16V 220U	2	
C4421	ECEV1CV220Q	E.CAPACITOR CH 16V 22U	1	
C4422	ECUM1H103KBN	C.CAPACITOR CH 50V 0.01U	1	
C4423	ECEV1CV220Q	E.CAPACITOR CH 16V 22U	1	
C4424	ECUM1H103KBN	C.CAPACITOR CH 50V 0.01U	1	
C4425,26	ECEV1CV220Q	E.CAPACITOR CH 16V 22U	2	
C4427,28	ECUM1H103KBN	C.CAPACITOR CH 50V 0.01U	2	
C4429,30	ECEV1CV470Q	E.CAPACITOR CH 16V 47U	2	
C4476	ECHU1C472G	P.CAPACITOR 16V 4700P	1	
C4477	ECEV1CN100Q	E.CAPACITOR CH 16V 10U	1	
C4478,79	ECUM1H103KBN	C.CAPACITOR CH 50V 0.01U	2	
C4480	ECUM1H270JCN	C.CAPACITOR CH 50V 27P	1	
C4481	ECEV1CV100Q	E.CAPACITOR CH 16V 10U	1	
C4482	ECUM1H470JCN	C.CAPACITOR CH 50V 47P	1	
C4483	ECUM1H103KBN	C.CAPACITOR CH 50V 0.01U	1	

Ref.No.	Part No.	Part Name & Description	Pcs	Remarks
C4484,85	ECEV1CV100Q	E.CAPACITOR CH 16V 10U	2	
C4486	ECUM1H103KBN	C.CAPACITOR CH 50V 0.01U	1	
C4487	ECEV1CV100Q	E.CAPACITOR CH 16V 10U	1	
C4488,89	ECEA1CGE221	E.CAPACITOR 16V 220U	2	
C4490,91	ECEV1CV220Q	E.CAPACITOR CH 16V 22U	2	
C4492,93	ECUM1H103KBN	C.CAPACITOR CH 50V 0.01U	2	
C4494,95	ECEV1CV220Q	E.CAPACITOR CH 16V 22U	2	
C4496,97	ECUM1H103KBN	C.CAPACITOR CH 50V 0.01U	2	
C4701-04	ECUM1E104ZFN	C.CAPACITOR CH 25V 0.1U	4	
C4705	ECEV1CV470Q	E.CAPACITOR CH 16V 47U	1	
C4706-10	ECUM1E104ZFN	C.CAPACITOR CH 25V 0.1U	5	
C4711	ECEV0JV101Q	E.CAPACITOR CH6.3V 100U	1	
C4712-14	ECUM1E104ZFN	C.CAPACITOR CH 25V 0.1U	3	
C4715-18	ECEV1CV470Q	E.CAPACITOR CH 16V 47U	4	
C4720	ECEV1CV220Q	E.CAPACITOR CH 16V 22U	1	
C4721	ECUM1E104ZFN	C.CAPACITOR CH 25V 0.1U	1	
C4722	ECEV1CV220Q	E.CAPACITOR CH 16V 22U	1	
C4723,24	ECUM1E104ZFN	C.CAPACITOR CH 25V 0.1U	2	
C4725	ECEV1CV100Q	E.CAPACITOR CH 16V 10U	1	
C4726	ECUM1E104ZFN	C.CAPACITOR CH 25V 0.1U	1	
C4727	ECUM1H103KBN	C.CAPACITOR CH 50V 0.01U	1	
C4728	ECEV0JV101Q	E.CAPACITOR CH6.3V 100U	1	
C4729,30	ECEV1CN100Q	E.CAPACITOR CH 16V 10U	2	
C4731,32	ECUM1H221JCN	C.CAPACITOR CH 50V 220P	2	
C4733-36	ECUM1H103KBN	C.CAPACITOR CH 50V 0.01U	4	
C4737,38	ECHU1C472G	P.CAPACITOR 16V 4700P	2	
C4739,40	ECEV1CN100Q	E.CAPACITOR CH 16V 10U	2	
C4745	ECUM1H101JCN	C.CAPACITOR CH 50V 100P	1	
C4751	ECUM1E104ZFN	C.CAPACITOR CH 25V 0.1U	1	
C4752	ECEV1CV220Q	E.CAPACITOR CH 16V 22U	1	
C4754,55	ECEV1CV470Q	E.CAPACITOR CH 16V 47U	2	
C4756	ECUM1H820JCN	C.CAPACITOR CH 50V 82P	1	
C4757	ECUM1E104ZFN	C.CAPACITOR CH 25V 0.1U	1	
C4758	ECEV1CN100Q	E.CAPACITOR CH 16V 10U	1	
C4759,60	ECUM1E104ZFN	C.CAPACITOR CH 25V 0.1U	2	
C4761,62	ECUM1H103KBN	C.CAPACITOR CH 50V 0.01U	2	
C4763	ECUM1H270JCN	C.CAPACITOR CH 50V 27P	1	
C4764	ECUM1H470JCN	C.CAPACITOR CH 50V 47P	1	
C4765,66	ECUM1H103KBN	C.CAPACITOR CH 50V 0.01U	2	
C4767-70	ECEV1CV100Q	E.CAPACITOR CH 16V 10U	4	
C4771,72	ECEA1CGE221	E.CAPACITOR 16V 220U	2	
C4773	ECEV1CV220Q	E.CAPACITOR CH 16V 22U	1	
C4774	ECUM1H103KBN	C.CAPACITOR CH 50V 0.01U	1	
C4775,76	ECEV1CV220Q	E.CAPACITOR CH 16V 22U	2	
C4777	ECUM1H103KBN	C.CAPACITOR CH 50V 0.01U	1	
C4778	ECEV1CV220Q	E.CAPACITOR CH 16V 22U	1	
C4779,80	ECUM1H103KBN	C.CAPACITOR CH 50V 0.01U	2	
C4831	ECUM1H820JCN	C.CAPACITOR CH 50V 82P	1	
C4832	ECEV1CN100Q	E.CAPACITOR CH 16V 10U	1	
C4833-35	ECUM1E104ZFN	C.CAPACITOR CH 25V 0.1U	3	
C4836,37	ECUM1H103KBN	C.CAPACITOR CH 50V 0.01U	2	
C4838	ECUM1H470JCN	C.CAPACITOR CH 50V 47P	1	
C4839	ECUM1H103KBN	C.CAPACITOR CH 50V 0.01U	1	
C4840	ECUM1H270JCN	C.CAPACITOR CH 50V 27P	1	
C4841	ECUM1H103KBN	C.CAPACITOR CH 50V 0.01U	1	
C4842-45	ECEV1CV100Q	E.CAPACITOR CH 16V 10U	4	
C4846,47	ECEA1CGE221	E.CAPACITOR 16V 220U	2	
C4848	ECEV1CV220Q	E.CAPACITOR CH 16V 22U	1	
C4849	ECUM1H103KBN	C.CAPACITOR CH 50V 0.01U	1	
C4850	ECEV1CV220Q	E.CAPACITOR CH 16V 22U	1	
C4851	ECUM1H103KBN	C.CAPACITOR CH 50V 0.01U	1	
C4852,53	ECEV1CV220Q	E.CAPACITOR CH 16V 22U	2	
C4854,55	ECUM1H103KBN	C.CAPACITOR CH 50V 0.01U	2	
C4901,02	ECUM1E104ZFN	C.CAPACITOR CH 25V 0.1U	2	
C4903,04	ECUX1H102JCN	C.CAPACITOR CH 50V 1000P	2	
C4905	ECEV0JV101Q	E.CAPACITOR CH6.3V 100U	1	
C4906	ECUM1H103KBN	C.CAPACITOR CH 50V 0.01U	1	
C4907	ECEV0JV101Q	E.CAPACITOR CH6.3V 100U	1	
C4908	ECUM1H103KBN	C.CAPACITOR CH 50V 0.01U	1	
C4931	ECEV1CV470Q	E.CAPACITOR CH 16V 47U	1	
C4932	ECUM1H103ZFN	C.CAPACITOR CH 50V 0.01U	1	
C4933-36	ECUM1H103KBN	C.CAPACITOR CH 50V 0.01U	4	
C4937-39	ECUM1H103ZFN	C.CAPACITOR CH 50V 0.01U	3	
C4940	ECUM1H103KBN	C.CAPACITOR CH 50V 0.01U	1	

Ref.No.	Part No.	Part Name & Description	Pcs	Remarks
D4001,02	MA157	DIODE	2	
D4041,42	MA157	DIODE	2	
D4401,02	MA157	DIODE	2	
D4476,77	MA157	DIODE	2	
D4751	MA157	DIODE	1	
D4752,53	MA152WK	DIODE	2	
D4754,55	MA157	DIODE	2	
D4831,32	MA157	DIODE	2	
FL4931	VLF0941C223	FILTER	1	
IC4001	NJM4580ED	IC	1	
IC4002	MC14052BF	IC	1	
IC4003	NJM79L09UA	IC	1	
IC4004	NJM78L09UA	IC	1	
IC4005	NJM4580ED	IC	1	
IC4006	AD7945BR	IC	1	
IC4007,08	NJM4580ED	IC	2	
IC4009	MC14052BF	IC	1	
IC4041,42	NJM4580ED	IC	2	
IC4043	NJM78L09UA	IC	1	
IC4044	NJM79L09UA	IC	1	
IC4045,46	NJM4580ED	IC	2	
IC4047	MC14052BF	IC	1	
IC4048	AD7945BR	IC	1	
IC4049	MC14052BF	IC	1	
IC4201	MC74HC541AF	IC	1	
IC4202	NJM78L05UA	IC	1	
IC4203,04	NJM2100MD	IC	2	
IC4205	AK5340VS	IC	1	
IC4301	NJM78L05UA	IC	1	
IC4302	AK4320VM	IC	1	
IC4303,04	NJM4580ED	IC	2	
IC4305	MC74HC157AF	IC	1	
IC4306	TC7W74F	IC	1	
IC4307,08	TC4W53F	IC	2	
IC4401	NJM4580ED	IC	1	
IC4402	NJM79L05UA	IC	1	
IC4403	NJM78L05UA	IC	1	
IC4404	NJM4580ED	IC	1	
IC4405	NJM2043MD	IC	1	
IC4406	MC14052BF	IC	1	
IC4407,08	AQV212SX	IC	2	
IC4476,77	NJM4580ED	IC	2	
IC4478	NJM2043MD	IC	1	
IC4479	MC14052BF	IC	1	
IC4480,81	AQV212SX	IC	2	
IC4701	NJM78L05UA	IC	1	
IC4702	AK4320VM	IC	1	
IC4703,04	NJM4580ED	IC	2	
IC4707	NJM78L09UA	IC	1	
IC4708,09	NJM79L09UA	IC	2	
IC4710	NJM78L09UA	IC	1	
IC4711	MC74HC541AF	IC	1	
IC4712,13	TC4W53F	IC	2	
IC4751,52	NJM4580ED	IC	2	
IC4753	NJM2043MD	IC	1	
IC4754	AD7945BR	IC	1	
IC4755	MC14053BF	IC	1	
IC4756	MC14052BF	IC	1	
IC4757,58	AQV212SX	IC	2	
IC4831,32	NJM4580ED	IC	2	
IC4833	NJM2043MD	IC	1	
IC4834	AD7945BR	IC	1	
IC4835	MC14053BF	IC	1	
IC4836	MC14052BF	IC	1	
IC4837,38	AQV212SX	IC	2	
IC4901	NJM4556AM	IC	1	
IC4931,32	SN74S1051NS	IC	2	
IC4933	74F245SJ	IC	1	
IC4934	74F541SJ	IC	1	
IC4935	74AC139SJ	IC	1	
IC4936	74F11SJ	IC	1	
IC4937	TC7S04F	IC	1	
IC4938-40	UPD71055GB	IC	3	

Ref.No.	Part No.	Part Name & Description	Pcs	Remarks
L4201	VLQ0163J100	COIL 10UH	1	
L4301	VLQ0163J100	COIL 10UH	1	
L4701	VLQ0163J100	COIL 10UH	1	
P4001,02	VJP3454B096	CONNECTOR (MALE)	2	
Q4003	2SD1328	TRANSISTOR	1	
Q4041	2SD1328	TRANSISTOR	1	
Q4301,02	2SK198-R	TRANSISTOR	2	
Q4401	2SD1328	TRANSISTOR	1	
Q4402	2SB1322A-R	TRANSISTOR	1	
Q4403	2SD1994A-R	TRANSISTOR	1	
Q4404	2SB1322A-R	TRANSISTOR	1	
Q4405	2SD1994A-R	TRANSISTOR	1	
Q4406	2SB710A-R	TRANSISTOR	1	
Q4407	2SD602A-R	TRANSISTOR	1	
Q4476	2SD1328	TRANSISTOR	1	
Q4477	2SB1322A-R	TRANSISTOR	1	
Q4478	2SD1994A-R	TRANSISTOR	1	
Q4479	2SB1322A-R	TRANSISTOR	1	
Q4480	2SD1994A-R	TRANSISTOR	1	
Q4481	2SB710A-R	TRANSISTOR	1	
Q4482	2SD602A-R	TRANSISTOR	1	
Q4701,02	2SD1328	TRANSISTOR	2	
Q4703,04	2SK198-R	TRANSISTOR	2	
Q4751-54	2SB710A-R	TRANSISTOR	4	
Q4755	2SD1994A-R	TRANSISTOR	1	
Q4756	2SB1322A-R	TRANSISTOR	1	
Q4757	2SD1994A-R	TRANSISTOR	1	
Q4758	2SB1322A-R	TRANSISTOR	1	
Q4759	2SD602A-R	TRANSISTOR	1	
Q4760	2SB710A-R	TRANSISTOR	1	
Q4831	2SD1994A-R	TRANSISTOR	1	
Q4832	2SB1322A-R	TRANSISTOR	1	
Q4833	2SD1994A-R	TRANSISTOR	1	
Q4834	2SB1322A-R	TRANSISTOR	1	
Q4835	2SD602A-R	TRANSISTOR	1	
Q4836	2SB710A-R	TRANSISTOR	1	
Q4901-04	2SD1328	TRANSISTOR	4	
QR4001	UN2213	TRANSISTOR-RESISTOR	1	
QR4002	UN2113	TRANSISTOR-RESISTOR	1	
QR4041	UN2213	TRANSISTOR-RESISTOR	1	
QR4042	UN2113	TRANSISTOR-RESISTOR	1	
QR4301	UN2213	TRANSISTOR-RESISTOR	1	
QR4302	UN2113	TRANSISTOR-RESISTOR	1	
QR4303	UN2213	TRANSISTOR-RESISTOR	1	
QR4401	UN2213	TRANSISTOR-RESISTOR	1	
QR4402	UN2113	TRANSISTOR-RESISTOR	1	
QR4476	UN2213	TRANSISTOR-RESISTOR	1	
QR4477	UN2113	TRANSISTOR-RESISTOR	1	
QR4701-03	UN2213	TRANSISTOR-RESISTOR	3	
QR4704,05	UN2113	TRANSISTOR-RESISTOR	2	
QR4751,52	UN2213	TRANSISTOR-RESISTOR	2	
R4001	ERJ6RBD202	M.RESISTOR CH 1/10W 2K	1	
R4002	ERJ6RBD332	M.RESISTOR CH 1/10W 3.3K	1	
R4003	ERJ6RBD333	M.RESISTOR CH 1/10W 33K	1	
R4004	ERJ12YJ621	M.RESISTOR CH 1/2W 620	1	
R4005	ERJ6RBD223	M.RESISTOR CH 1/10W 22K	1	
R4006	ERJ6RBD123	M.RESISTOR CH 1/10W 12K	1	
R4007,08	ERJ6RBD473	M.RESISTOR CH 1/10W 47K	2	
R4009	ERJ6RBD123	M.RESISTOR CH 1/10W 12K	1	
R4010	ERJ6RBD333	M.RESISTOR CH 1/10W 33K	1	
R4011	ERJ6RBD332	M.RESISTOR CH 1/10W 3.3K	1	
R4012	ERJ6RBD202	M.RESISTOR CH 1/10W 2K	1	
R4013,14	ERJ6RBD472	M.RESISTOR CH 1/10W 4.7K	2	
R4015	ERJ6RED470	M.RESISTOR CH 1/10W 47	1	
R4016,17	ERJ6RBD472	M.RESISTOR CH 1/10W 4.7K	2	
R4018	ERJ6GEYG103	M.RESISTOR CH 1/10W 10K	1	
R4019	ERJ6GEYG102	M.RESISTOR CH 1/10W 1K	1	
R4020	ERJ6GEYG104	M.RESISTOR CH 1/10W 100K	1	
R4021	ERJ6GEYG683	M.RESISTOR CH 1/10W 68K	1	
R4022	ERJ6GEYG103	M.RESISTOR CH 1/10W 10K	1	

Ref.No.	Part No.	Part Name & Description	Pcs	Remarks
R4023	ERJ6RBD102	M.RESISTOR CH 1/10W 1K	1	
R4024	ERJ6GEYG105	M.RESISTOR CH 1/10W 1M	1	
R4025	ERJ6RBD222	M.RESISTOR CH 1/10W 2.2K	1	
R4026,27	ERJ6RBD153	M.RESISTOR CH 1/10W 15K	2	
R4028	ERJ6GEYF472	M.RESISTOR CH 1/10W 4.7K	1	
R4029	ERJ6RBD472	M.RESISTOR CH 1/10W 4.7K	1	
R4030	ERJ6GEYG103	M.RESISTOR CH 1/10W 10K	1	
R4031,32	ERJ6RBD472	M.RESISTOR CH 1/10W 4.7K	2	
R4033	ERJ6GEYG103	M.RESISTOR CH 1/10W 10K	1	
R4034	ERJ6GEYG182	M.RESISTOR CH 1/10W 1.8K	1	
R4035	ERJ6GEYG103	M.RESISTOR CH 1/10W 10K	1	
R4037	ERJ6GEYG103	M.RESISTOR CH 1/10W 10K	1	
R4041	ERJ12YJ621	M.RESISTOR CH 1/2W 620	1	
R4042	ERJ6RBD333	M.RESISTOR CH 1/10W 33K	1	
R4043	ERJ6RBD332	M.RESISTOR CH 1/10W 3.3K	1	
R4044	ERJ6RBD202	M.RESISTOR CH 1/10W 2K	1	
R4045	ERJ6RBD223	M.RESISTOR CH 1/10W 22K	1	
R4046,47	ERJ6RBD473	M.RESISTOR CH 1/10W 47K	2	
R4048,49	ERJ6RBD123	M.RESISTOR CH 1/10W 12K	2	
R4050	ERJ6RBD202	M.RESISTOR CH 1/10W 2K	1	
R4051	ERJ6RBD332	M.RESISTOR CH 1/10W 3.3K	1	
R4052	ERJ6RBD333	M.RESISTOR CH 1/10W 33K	1	
R4053-56	ERJ6RBD472	M.RESISTOR CH 1/10W 4.7K	4	
R4057	ERJ6RED470	M.RESISTOR CH 1/10W 47	1	
R4058	ERJ6GEYG103	M.RESISTOR CH 1/10W 10K	1	
R4059	ERJ6GEYG182	M.RESISTOR CH 1/10W 1.8K	1	
R4060	ERJ6GEYG103	M.RESISTOR CH 1/10W 10K	1	
R4061	ERJ6GEYG102	M.RESISTOR CH 1/10W 1K	1	
R4062	ERJ6GEYG104	M.RESISTOR CH 1/10W 100K	1	
R4063	ERJ6GEYG683	M.RESISTOR CH 1/10W 68K	1	
R4064	ERJ6GEYG103	M.RESISTOR CH 1/10W 10K	1	
R4065	ERJ6GEYG105	M.RESISTOR CH 1/10W 1M	1	
R4066	ERJ6RBD102	M.RESISTOR CH 1/10W 1K	1	
R4067	ERJ6RBD222	M.RESISTOR CH 1/10W 2.2K	1	
R4068,69	ERJ6RBD153	M.RESISTOR CH 1/10W 15K	2	
R4070	ERJ6GEYF472	M.RESISTOR CH 1/10W 4.7K	1	
R4071	ERJ6GEYG103	M.RESISTOR CH 1/10W 10K	1	
R4072-74	ERJ6RBD472	M.RESISTOR CH 1/10W 4.7K	3	
R4075	ERJ6GEYG103	M.RESISTOR CH 1/10W 10K	1	
R4077	ERJ6GEYG103	M.RESISTOR CH 1/10W 10K	1	
R4201	ERJ6GEYG331	M.RESISTOR CH 1/10W 330	1	
R4202	ERJ6GEYG103	M.RESISTOR CH 1/10W 10K	1	
R4203	ERJ6GEYF472	M.RESISTOR CH 1/10W 4.7K	1	
R4204	ERJ6GEYG331	M.RESISTOR CH 1/10W 330	1	
R4205	ERJ6GEYG103	M.RESISTOR CH 1/10W 10K	1	
R4206	ERJ6RBD103	M.RESISTOR CH 1/10W 10K	1	
R4207	ERJ6GEYJ100	M.RESISTOR CH 1/10W 10	1	
R4208	ERJ6RBD103	M.RESISTOR CH 1/10W 10K	1	
R4209	ERJ6GEYF472	M.RESISTOR CH 1/10W 4.7K	1	
R4210	ERJ6GEYJ100	M.RESISTOR CH 1/10W 10	1	
R4211,12	ERJ6GEYF472	M.RESISTOR CH 1/10W 4.7K	2	
R4214-18	ERJ6RBD103	M.RESISTOR CH 1/10W 10K	5	
R4219,20	ERJ6RBD331	M.RESISTOR CH 1/10W 330	2	
R4221	ERJ6RBD103	M.RESISTOR CH 1/10W 10K	1	
R4222,23	ERJ6RBD331	M.RESISTOR CH 1/10W 330	2	
R4227-30	ERJ6GEY0R00	M.RESISTOR CH 1/10W 0	4	
R4231	VLQ0576	COIL	1	
R4232	ERJ6GEY0R00	M.RESISTOR CH 1/10W 0	1	
R4301	ERJ6GEY0R00	M.RESISTOR CH 1/10W 0	1	
R4302	ERJ6GEYF473	M.RESISTOR CH 1/10W 47K	1	
R4303	ERJ6GEY0R00	M.RESISTOR CH 1/10W 0	1	
R4304-06	ERJ6GEYF473	M.RESISTOR CH 1/10W 47K	3	
R4307	ERJ6GEY0R00	M.RESISTOR CH 1/10W 0	1	
R4308-11	ERJ6GEYF473	M.RESISTOR CH 1/10W 47K	4	
R4314	ERJ6GEYF472	M.RESISTOR CH 1/10W 4.7K	1	
R4316-18	ERJ6GEYF472	M.RESISTOR CH 1/10W 4.7K	3	
R4319,20	ERJ6GEYG273	M.RESISTOR CH 1/10W 27K	2	
R4321	ERJ6RBD391	M.RESISTOR CH 1/10W 390	1	
R4322	ERJ6RBD222	M.RESISTOR CH 1/10W 2.2K	1	
R4323	ERJ6RBD103	M.RESISTOR CH 1/10W 10K	1	
R4324	ERJ6RBD391	M.RESISTOR CH 1/10W 390	1	
R4325	ERJ6RBD222	M.RESISTOR CH 1/10W 2.2K	1	
R4326	ERJ6RBD103	M.RESISTOR CH 1/10W 10K	1	
R4327	ERJ6RBD682	M.RESISTOR CH 1/10W 6.8K	1	
R4328	ERJ6RBD392	M.RESISTOR CH 1/10W 3.9K	1	

Ref.No.	Part No.	Part Name & Description	Pcs	Remarks
R4329	ERJ6RBD561	M.RESISTOR CH 1/10W 560	1	
R4330	ERJ6GEYG105	M.RESISTOR CH 1/10W 1M	1	
R4331	ERJ6RBD682	M.RESISTOR CH 1/10W 6.8K	1	
R4332	ERJ6RBD392	M.RESISTOR CH 1/10W 3.9K	1	
R4333	ERJ6RBD561	M.RESISTOR CH 1/10W 560	1	
R4334	ERJ6GEYG105	M.RESISTOR CH 1/10W 1M	1	
R4335,36	ERJ6GEYG103	M.RESISTOR CH 1/10W 10K	2	
R4337	ERJ6GEYG683	M.RESISTOR CH 1/10W 68K	1	
R4401	ERJ6GEYG104	M.RESISTOR CH 1/10W 100K	1	
R4402	ERJ6GEYG103	M.RESISTOR CH 1/10W 10K	1	
R4403	ERJ6RBD223	M.RESISTOR CH 1/10W 22K	1	
R4404	ERJ6RBD222	M.RESISTOR CH 1/10W 2.2K	1	
R4405	ERJ6RBD102	M.RESISTOR CH 1/10W 1K	1	
R4406	ERJ6GEYG105	M.RESISTOR CH 1/10W 1M	1	
R4407	ERJ6GEYG683	M.RESISTOR CH 1/10W 68K	1	
R4408	ERJ6RBD123	M.RESISTOR CH 1/10W 12K	1	
R4409	ERJ6GEYF472	M.RESISTOR CH 1/10W 4.7K	1	
R4410	ERJ6GEYG102	M.RESISTOR CH 1/10W 1K	1	
R4411	ERJ6GEYG103	M.RESISTOR CH 1/10W 10K	1	
R4412	ERJ6RBD301	M.RESISTOR CH 1/10W 300	1	
R4413	ERJ6RBD272	M.RESISTOR CH 1/10W 2.7K	1	
R4414	ERJ6RBD472	M.RESISTOR CH 1/10W 4.7K	1	
R4415	ERJ6RBD123	M.RESISTOR CH 1/10W 12K	1	
R4416	ERJ6RBD102	M.RESISTOR CH 1/10W 1K	1	
R4417	ERJ6RBD103	M.RESISTOR CH 1/10W 10K	1	
R4418	ERJ6GEYG563	M.RESISTOR CH 1/10W 56K	1	
R4419	ERJ6GEYF472	M.RESISTOR CH 1/10W 4.7K	1	
R4420	ERJ6RBD682	M.RESISTOR CH 1/10W 6.8K	1	
R4421-24	ERJ6RBD472	M.RESISTOR CH 1/10W 4.7K	4	
R4425	ERJ6GEYG562	M.RESISTOR CH 1/10W 5.6K	1	
R4426	ERJ6GEYG105	M.RESISTOR CH 1/10W 1M	1	
R4427	ERJ6GEYJ100	M.RESISTOR CH 1/10W 10	1	
R4428,29	ERJ6RBD153	M.RESISTOR CH 1/10W 15K	2	
R4430	ERJ6RED150	M.RESISTOR CH 1/10W 15	1	
R4431	ERJ6RBD153	M.RESISTOR CH 1/10W 15K	1	
R4433	ERJ6GEYG562	M.RESISTOR CH 1/10W 5.6K	1	
R4434	ERJ6GEYG105	M.RESISTOR CH 1/10W 1M	1	
R4435	ERJ6GEYJ100	M.RESISTOR CH 1/10W 10	1	
R4436	ERJ6RBD153	M.RESISTOR CH 1/10W 15K	1	
R4437,38	ERJ6GEYG562	M.RESISTOR CH 1/10W 5.6K	2	
R4439,40	ERJ14YJ100	M.RESISTOR CH 1/4W 10	2	
R4441	ERJ14YJ220	M.RESISTOR CH 1/4W 22	1	
R4442,43	ERJ14YJ100	M.RESISTOR CH 1/4W 10	2	
R4444	ERJ14YJ220	M.RESISTOR CH 1/4W 22	1	
R4445,46	ERJ6GEYG103	M.RESISTOR CH 1/10W 10K	2	
R4447,48	ERJ6GEYG102	M.RESISTOR CH 1/10W 1K	2	
R4449	ERJ6GEYG103	M.RESISTOR CH 1/10W 10K	1	
R4450,51	ERJ6GEYF561	M.RESISTOR CH 1/10W 560	2	
R4452	ERJ6GEYG103	M.RESISTOR CH 1/10W 10K	1	
R4453	ERJ6GEY0R00	M.RESISTOR CH 1/10W 0	1	
R4454	ERJ6RBD301	M.RESISTOR CH 1/10W 300	1	
R4455	ERJ6RBD512	M.RESISTOR CH 1/10W 5.1K	1	
R4456	ERJ6RBD472	M.RESISTOR CH 1/10W 4.7K	1	
R4461	ERJ6GEYJ335	M.RESISTOR CH 1/10W 3.3M	1	
R4462	ERJ6RED470	M.RESISTOR CH 1/10W 47	1	
R4463	ERJ6RBD911	M.RESISTOR CH 1/10W 910	1	
R4464	ERJ6GEYJ335	M.RESISTOR CH 1/10W 3.3M	1	
R4465	ERJ6RBD911	M.RESISTOR CH 1/10W 910	1	
R4466	ERJ6RED470	M.RESISTOR CH 1/10W 47	1	
R4467	ERJ6RBD123	M.RESISTOR CH 1/10W 12K	1	
R4468	ERJ6RBD151	M.RESISTOR CH 1/10W 150	1	
R4469	ERJ6RBD682	M.RESISTOR CH 1/10W 6.8K	1	
R4470	ERJ6RBD822	M.RESISTOR CH 1/10W 8.2K	1	
R4471	ERJ6RBD391	M.RESISTOR CH 1/10W 390	1	
R4472	ERJ6RBD202	M.RESISTOR CH 1/10W 2K	1	
R4473	ERJ6RBD153	M.RESISTOR CH 1/10W 15K	1	
R4476	ERJ6GEYG104	M.RESISTOR CH 1/10W 100K	1	
R4477	ERJ6RBD223	M.RESISTOR CH 1/10W 22K	1	
R4478	ERJ6RBD222	M.RESISTOR CH 1/10W 2.2K	1	
R4479	ERJ6GEYG683	M.RESISTOR CH 1/10W 68K	1	
R4480	ERJ6GEYG103	M.RESISTOR CH 1/10W 10K	1	
R4481	ERJ6RBD102	M.RESISTOR CH 1/10W 1K	1	
R4482	ERJ6GEYG105	M.RESISTOR CH 1/10W 1M	1	
R4483	ERJ6RBD123	M.RESISTOR CH 1/10W 12K	1	
R4484	ERJ6GEYF472	M.RESISTOR CH 1/10W 4.7K	1	

Ref.No.	Part No.	Part Name & Description	Pcs	Remarks
R4485	ERJ6GEYG102	M.RESISTOR CH 1/10W 1K	1	
R4486	ERJ6GEYG103	M.RESISTOR CH 1/10W 10K	1	
R4487	ERJ6RBD301	M.RESISTOR CH 1/10W 300	1	
R4488	ERJ6RBD272	M.RESISTOR CH 1/10W 2.7K	1	
R4489	ERJ6RBD472	M.RESISTOR CH 1/10W 4.7K	1	
R4490	ERJ6RBD123	M.RESISTOR CH 1/10W 12K	1	
R4491	ERJ6RBD102	M.RESISTOR CH 1/10W 1K	1	
R4492	ERJ6RBD103	M.RESISTOR CH 1/10W 10K	1	
R4493	ERJ6GEYG563	M.RESISTOR CH 1/10W 56K	1	
R4494	ERJ6GEYF472	M.RESISTOR CH 1/10W 4.7K	1	
R4495	ERJ6RBD682	M.RESISTOR CH 1/10W 6.8K	1	
R4496-99	ERJ6RBD472	M.RESISTOR CH 1/10W 4.7K	4	
R4500	ERJ6GEYG105	M.RESISTOR CH 1/10W 1M	1	
R4501	ERJ6GEYG562	M.RESISTOR CH 1/10W 5.6K	1	
R4502	ERJ6GEYG105	M.RESISTOR CH 1/10W 1M	1	
R4503	ERJ6GEYJ100	M.RESISTOR CH 1/10W 10	1	
R4504,05	ERJ6RBD153	M.RESISTOR CH 1/10W 15K	2	
R4506	ERJ6RED150	M.RESISTOR CH 1/10W 15	1	
R4507	ERJ6RBD153	M.RESISTOR CH 1/10W 15K	1	
R4509	ERJ6GEYG562	M.RESISTOR CH 1/10W 5.6K	1	
R4510	ERJ6GEYJ100	M.RESISTOR CH 1/10W 10	1	
R4511	ERJ6GEYG562	M.RESISTOR CH 1/10W 5.6K	1	
R4512	ERJ6RBD153	M.RESISTOR CH 1/10W 15K	1	
R4513	ERJ6GEYG562	M.RESISTOR CH 1/10W 5.6K	1	
R4514,15	ERJ14YJ100	M.RESISTOR CH 1/4W 10	2	
R4516	ERJ14YJ220	M.RESISTOR CH 1/4W 22	1	
R4517,18	ERJ14YJ100	M.RESISTOR CH 1/4W 10	2	
R4519	ERJ14YJ220	M.RESISTOR CH 1/4W 22	1	
R4520,21	ERJ6GEYG103	M.RESISTOR CH 1/10W 10K	2	
R4522,23	ERJ6GEYG102	M.RESISTOR CH 1/10W 1K	2	
R4524	ERJ6GEYF561	M.RESISTOR CH 1/10W 560	1	
R4525	ERJ6GEYG103	M.RESISTOR CH 1/10W 10K	1	
R4526	ERJ6GEYF561	M.RESISTOR CH 1/10W 560	1	
R4527	ERJ6GEYG103	M.RESISTOR CH 1/10W 10K	1	
R4528	ERJ6GEY0R00	M.RESISTOR CH 1/10W 0	1	
R4529	ERJ6RBD301	M.RESISTOR CH 1/10W 300	1	
R4530	ERJ6RBD512	M.RESISTOR CH 1/10W 5.1K	1	
R4531	ERJ6RBD472	M.RESISTOR CH 1/10W 4.7K	1	
R4536	ERJ6GEYJ335	M.RESISTOR CH 1/10W 3.3M	1	
R4537	ERJ6RED470	M.RESISTOR CH 1/10W 47	1	
R4538	ERJ6RBD911	M.RESISTOR CH 1/10W 910	1	
R4539	ERJ6GEYJ335	M.RESISTOR CH 1/10W 3.3M	1	
R4540	ERJ6RBD911	M.RESISTOR CH 1/10W 910	1	
R4541	ERJ6RED470	M.RESISTOR CH 1/10W 47	1	
R4542	ERJ6RBD123	M.RESISTOR CH 1/10W 12K	1	
R4543	ERJ6RBD151	M.RESISTOR CH 1/10W 150	1	
R4544	ERJ6RBD682	M.RESISTOR CH 1/10W 6.8K	1	
R4545	ERJ6RBD822	M.RESISTOR CH 1/10W 8.2K	1	
R4546	ERJ6RBD391	M.RESISTOR CH 1/10W 390	1	
R4547	ERJ6RBD202	M.RESISTOR CH 1/10W 2K	1	
R4548	ERJ6RBD153	M.RESISTOR CH 1/10W 15K	1	
R4701,02	ERJ6GEYF473	M.RESISTOR CH 1/10W 47K	2	
R4703,04	ERJ6GEY0R00	M.RESISTOR CH 1/10W 0	2	
R4705-10	ERJ6GEYF473	M.RESISTOR CH 1/10W 47K	6	
R4713,14	ERJ6GEYF472	M.RESISTOR CH 1/10W 4.7K	2	
R4716,17	ERJ6GEYF472	M.RESISTOR CH 1/10W 4.7K	2	
R4718,19	ERJ6GEYG273	M.RESISTOR CH 1/10W 27K	2	
R4720	ERJ6GEYG104	M.RESISTOR CH 1/10W 100K	1	
R4721	ERJ6GEYG683	M.RESISTOR CH 1/10W 68K	1	
R4722	ERJ6GEYG103	M.RESISTOR CH 1/10W 10K	1	
R4723	ERJ6GEYG104	M.RESISTOR CH 1/10W 100K	1	
R4724	ERJ6GEYG103	M.RESISTOR CH 1/10W 10K	1	
R4725	ERJ6GEYG683	M.RESISTOR CH 1/10W 68K	1	
R4726	ERJ6RBD223	M.RESISTOR CH 1/10W 22K	1	
R4727	ERJ6RBD222	M.RESISTOR CH 1/10W 2.2K	1	
R4728	ERJ6RBD102	M.RESISTOR CH 1/10W 1K	1	
R4729	ERJ6GEYG105	M.RESISTOR CH 1/10W 1M	1	
R4730	ERJ6RBD123	M.RESISTOR CH 1/10W 12K	1	
R4731	ERJ6RBD223	M.RESISTOR CH 1/10W 22K	1	
R4732	ERJ6RBD222	M.RESISTOR CH 1/10W 2.2K	1	
R4733	ERJ6RBD102	M.RESISTOR CH 1/10W 1K	1	
R4734	ERJ6GEYG105	M.RESISTOR CH 1/10W 1M	1	
R4735	ERJ6RBD123	M.RESISTOR CH 1/10W 12K	1	
R4736	ERJ6GEYF472	M.RESISTOR CH 1/10W 4.7K	1	
R4737	ERJ6GEYG102	M.RESISTOR CH 1/10W 1K	1	

Ref.No.	Part No.	Part Name & Description	Pcs	Remarks
R4738	ERJ6GEYF472	M.RESISTOR CH 1/10W 4.7K	1	
R4739	ERJ6GEYG102	M.RESISTOR CH 1/10W 1K	1	
R4740,41	ERJ6GEYG103	M.RESISTOR CH 1/10W 10K	2	
R4742	ERJ6RBD391	M.RESISTOR CH 1/10W 390	1	
R4743	ERJ6RBD222	M.RESISTOR CH 1/10W 2.2K	1	
R4744	ERJ6RBD103	M.RESISTOR CH 1/10W 10K	1	
R4745	ERJ6RBD391	M.RESISTOR CH 1/10W 390	1	
R4746	ERJ6RBD222	M.RESISTOR CH 1/10W 2.2K	1	
R4747	ERJ6RBD103	M.RESISTOR CH 1/10W 10K	1	
R4751	ERJ6GEYG104	M.RESISTOR CH 1/10W 100K	1	
R4752	ERJ6GEYF333	M.RESISTOR CH 1/10W 33K	1	
R4753	ERJ6GEYG103	M.RESISTOR CH 1/10W 10K	1	
R4754	ERJ6GEYF473	M.RESISTOR CH 1/10W 47K	1	
R4755	ERJ6GEYG103	M.RESISTOR CH 1/10W 10K	1	
R4756	ERJ6GEYG222	M.RESISTOR CH 1/10W 2.2K	1	
R4757,58	ERJ6GEYF473	M.RESISTOR CH 1/10W 47K	2	
R4759	ERJ6GEYG105	M.RESISTOR CH 1/10W 1M	1	
R4760	ERJ6GEYG104	M.RESISTOR CH 1/10W 100K	1	
R4761	ERJ6GEYG103	M.RESISTOR CH 1/10W 10K	1	
R4762	ERJ6GEYF473	M.RESISTOR CH 1/10W 47K	1	
R4763	ERJ6GEYG104	M.RESISTOR CH 1/10W 100K	1	
R4764	ERJ6GEY0R00	M.RESISTOR CH 1/10W 0	1	
R4765	ERJ6RBD102	M.RESISTOR CH 1/10W 1K	1	
R4766	ERJ6GEYG392	M.RESISTOR CH 1/10W 3.9K	1	
R4767	ERJ6RED220	M.RESISTOR CH 1/10W 22	1	
R4768	ERJ6GEYG103	M.RESISTOR CH 1/10W 10K	1	
R4769	ERJ6RBD301	M.RESISTOR CH 1/10W 300	1	
R4770	ERJ6RBD272	M.RESISTOR CH 1/10W 2.7K	1	
R4771	ERJ6RBD472	M.RESISTOR CH 1/10W 4.7K	1	
R4772	ERJ6RBD123	M.RESISTOR CH 1/10W 12K	1	
R4773	ERJ6RBD102	M.RESISTOR CH 1/10W 1K	1	
R4774	ERJ6RBD103	M.RESISTOR CH 1/10W 10K	1	
R4775-77	ERJ6GEY0R00	M.RESISTOR CH 1/10W 0	3	
R4778	ERJ6GEYG563	M.RESISTOR CH 1/10W 56K	1	
R4779	ERJ6RBD682	M.RESISTOR CH 1/10W 6.8K	1	
R4780	ERJ6GEYF472	M.RESISTOR CH 1/10W 4.7K	1	
R4781-84	ERJ6RBD472	M.RESISTOR CH 1/10W 4.7K	4	
R4785	ERJ6GEYG105	M.RESISTOR CH 1/10W 1M	1	
R4786	ERJ6GEYJ100	M.RESISTOR CH 1/10W 10	1	
R4787	ERJ6GEYG105	M.RESISTOR CH 1/10W 1M	1	
R4788-90	ERJ6RBD153	M.RESISTOR CH 1/10W 15K	3	
R4791	ERJ6RED150	M.RESISTOR CH 1/10W 15	1	
R4793	ERJ6GEYJ100	M.RESISTOR CH 1/10W 10	1	
R4794	ERJ6RBD153	M.RESISTOR CH 1/10W 15K	1	
R4795	ERJ6GEYG562	M.RESISTOR CH 1/10W 5.6K	1	
R4796,97	ERJ14YJ100	M.RESISTOR CH 1/4W 10	2	
R4798,99	ERJ6GEYG562	M.RESISTOR CH 1/10W 5.6K	2	
R4800,01	ERJ14YJ100	M.RESISTOR CH 1/4W 10	2	
R4802	ERJ6GEYG562	M.RESISTOR CH 1/10W 5.6K	1	
R4803,04	ERJ14YJ220	M.RESISTOR CH 1/4W 22	2	
R4805,06	ERJ6GEYG103	M.RESISTOR CH 1/10W 10K	2	
R4807,08	ERJ6GEYG102	M.RESISTOR CH 1/10W 1K	2	
R4809,10	ERJ6GEYF561	M.RESISTOR CH 1/10W 560	2	
R4811,12	ERJ6GEYG103	M.RESISTOR CH 1/10W 10K	2	
R4813	ERJ6GEY0R00	M.RESISTOR CH 1/10W 0	1	
R4814	ERJ6RBD301	M.RESISTOR CH 1/10W 300	1	
R4815	ERJ6RBD512	M.RESISTOR CH 1/10W 5.1K	1	
R4816	ERJ6RBD472	M.RESISTOR CH 1/10W 4.7K	1	
R4831	ERJ6RBD102	M.RESISTOR CH 1/10W 1K	1	
R4832	ERJ6GEYG392	M.RESISTOR CH 1/10W 3.9K	1	
R4833	ERJ6RED220	M.RESISTOR CH 1/10W 22	1	
R4834	ERJ6GEYG103	M.RESISTOR CH 1/10W 10K	1	
R4835	ERJ6RBD272	M.RESISTOR CH 1/10W 2.7K	1	
R4836	ERJ6RBD301	M.RESISTOR CH 1/10W 300	1	
R4837-39	ERJ6GEY0R00	M.RESISTOR CH 1/10W 0	3	
R4840	ERJ6RBD472	M.RESISTOR CH 1/10W 4.7K	1	
R4841	ERJ6RBD123	M.RESISTOR CH 1/10W 12K	1	
R4842	ERJ6RBD102	M.RESISTOR CH 1/10W 1K	1	
R4843	ERJ6RBD103	M.RESISTOR CH 1/10W 10K	1	
R4844	ERJ6GEYG563	M.RESISTOR CH 1/10W 56K	1	
R4845	ERJ6GEYF472	M.RESISTOR CH 1/10W 4.7K	1	
R4846	ERJ6RBD682	M.RESISTOR CH 1/10W 6.8K	1	
R4847-50	ERJ6RBD472	M.RESISTOR CH 1/10W 4.7K	4	
R4851,52	ERJ6GEYG105	M.RESISTOR CH 1/10W 1M	2	
R4853	ERJ6GEYJ100	M.RESISTOR CH 1/10W 10	1	

Ref.No.	Part No.	Part Name & Description	Pcs	Remarks
R4854-56	ERJ6RBD153	M.RESISTOR CH 1/10W 15K	3	
R4857	ERJ6RED150	M.RESISTOR CH 1/10W 15	1	
R4859	ERJ6GEYJ100	M.RESISTOR CH 1/10W 10	1	
R4860	ERJ6RBD153	M.RESISTOR CH 1/10W 15K	1	
R4861	ERJ6GEYG562	M.RESISTOR CH 1/10W 5.6K	1	
R4862,63	ERJ14YJ100	M.RESISTOR CH 1/4W 10	2	
R4864,65	ERJ6GEYG562	M.RESISTOR CH 1/10W 5.6K	2	
R4866,67	ERJ14YJ100	M.RESISTOR CH 1/4W 10	2	
R4868	ERJ6GEYG562	M.RESISTOR CH 1/10W 5.6K	1	
R4869,70	ERJ14YJ220	M.RESISTOR CH 1/4W 22	2	
R4871,72	ERJ6GEYG103	M.RESISTOR CH 1/10W 10K	2	
R4873,74	ERJ6GEYG102	M.RESISTOR CH 1/10W 1K	2	
R4875,76	ERJ6GEYF561	M.RESISTOR CH 1/10W 560	2	
R4877,78	ERJ6GEYG103	M.RESISTOR CH 1/10W 10K	2	
R4879	ERJ6GEY0R00	M.RESISTOR CH 1/10W 0	1	
R4880	ERJ6RBD301	M.RESISTOR CH 1/10W 300	1	
R4881	ERJ6RBD512	M.RESISTOR CH 1/10W 5.1K	1	
R4882	ERJ6RBD472	M.RESISTOR CH 1/10W 4.7K	1	
R4901,02	ERJ6GEYG102	M.RESISTOR CH 1/10W 1K	2	
R4903,04	ERJ6GEYF472	M.RESISTOR CH 1/10W 4.7K	2	
R4905	ERJ6GEYG103	M.RESISTOR CH 1/10W 10K	1	
R4906	ERJ14YJ330	M.RESISTOR CH 1/4W 33	1	
R4908	ERJ14YJ330	M.RESISTOR CH 1/4W 33	1	
R4910	ERJ6GEYG103	M.RESISTOR CH 1/10W 10K	1	
R4911,12	ERJ6GEYG102	M.RESISTOR CH 1/10W 1K	2	
R4914	ERJ6GEY0R00	M.RESISTOR CH 1/10W 0	1	
R4916	ERJ6GEY0R00	M.RESISTOR CH 1/10W 0	1	
R4921	ERJ6RBD682	M.RESISTOR CH 1/10W 6.8K	1	
R4922	ERJ6RBD392	M.RESISTOR CH 1/10W 3.9K	1	
R4923	ERJ6RBD561	M.RESISTOR CH 1/10W 560	1	
R4924	ERJ6GEYG105	M.RESISTOR CH 1/10W 1M	1	
R4925	ERJ6RBD682	M.RESISTOR CH 1/10W 6.8K	1	
R4926	ERJ6RBD392	M.RESISTOR CH 1/10W 3.9K	1	
R4927	ERJ6RBD561	M.RESISTOR CH 1/10W 560	1	
R4928	ERJ6GEYG105	M.RESISTOR CH 1/10W 1M	1	
R4929-31	ERJ6GEYG103	M.RESISTOR CH 1/10W 10K	3	
R4932,33	ERJ6GEY0R00	M.RESISTOR CH 1/10W 0	2	
R4934-42	ERJ6GEYG103	M.RESISTOR CH 1/10W 10K	9	
R4943-46	ERJ6GEYG104	M.RESISTOR CH 1/10W 100K	4	
R4948-50	ERJ6GEYG104	M.RESISTOR CH 1/10W 100K	3	
R4951,52	ERJ6GEYG103	M.RESISTOR CH 1/10W 10K	2	
R4957	ERJ6GEY0R00	M.RESISTOR CH 1/10W 0	1	
SW4001	VSS0126	SWITCH	1	
SW4041	VSS0126	SWITCH	1	
TG4202	VJR0646	TEST POINT	1	
TG4301	VJR0646	TEST POINT	1	
TP4201-03	VJR0646	TEST POINT	3	
TP4253	VJR0646	TEST POINT	1	
TP4301,02	VJR0646	TEST POINT	2	
TP4401	VJR0646	TEST POINT	1	
TP4476	VJR0646	TEST POINT	1	
TP4701-04	VJR0646	TEST POINT	4	
VR4001	VRV0109B101	V.RESISTOR 100	1	
VR4002	VRV0112B103	V.RESISTOR 10K	1	
VR4041	VRV0109B101	V.RESISTOR 100	1	
VR4042	VRV0112B103	V.RESISTOR 10K	1	
VR4401	VRV0112B103	V.RESISTOR 10K	1	
VR4402	VRV0109B501	V.RESISTOR 500	1	
VR4476	VRV0112B103	V.RESISTOR 10K	1	
VR4477	VRV0109B501	V.RESISTOR 500	1	
VR4701,02	VRV0112B103	V.RESISTOR 10K	2	
VR4751	VRV0109B501	V.RESISTOR 500	1	
VR4831	VRV0109B501	V.RESISTOR 500	1	
		MISCELLANEOUS		
	VML2143	CARD PULLER	1	
	VML2144	CARD PULLER	1	

Ref.No.	Part No.	Part Name & Description	Pcs	Remarks
■E9	VEP84302C	H2 CUE P.C.BOARD	1	(RTL)
C4001	ECUM1H222KBN		1	
C4002	VCC0030	C.CAPACITOR	1	
C4003	ECEV1EN4R7Q	E.CAPACITOR CH 25V 4.7U	1	
C4004	ECUM1H822KBN	C.CAPACITOR CH 50V 8200P	1	
C4005,06	ECUM1H272KBN	C.CAPACITOR CH 50V 2700P	2	
C4007	ECUX1H273KBN	C.CAPACITOR CH 50V 0.027U	1	
C4008	ECEV1CV100Q	E.CAPACITOR CH 16V 10U	1	
C4009	ECEV1CV220Q	E.CAPACITOR CH 16V 22U	1	
C4010	ECUM1E104ZFN	C.CAPACITOR CH 25V 0.1U	1	
C4011	ECEV1CV100Q	E.CAPACITOR CH 16V 10U	1	
C4012	ECEV0JV101Q	E.CAPACITOR CH6.3V 100U	1	
C4013	ECST1VY684Z	T.CAPACITOR CH 35V 0.68U	1	
C4014,15	ECEV1CV100Q	E.CAPACITOR CH 16V 10U	2	
C4016	ECUM1H151JCN	C.CAPACITOR CH 50V 150P	1	
C4017	ECUM1H103KBN	C.CAPACITOR CH 50V 0.01U	1	
C4018	ECEV1CV470Q	E.CAPACITOR CH 16V 47U	1	
C4019	ECUM1H390JCN	C.CAPACITOR CH 50V 39P	1	
C4020	ECUX1E473KBN	C.CAPACITOR CH 25V 0.047U	1	
C4021	ECEV1CV220Q	E.CAPACITOR CH 16V 22U	1	
C4022	ECUX1C394KBM	C.CAPACITOR CH 16V 0.39U	1	
C4023	ECEV1CV220Q	E.CAPACITOR CH 16V 22U	1	
C4024,25	ECUX1C394KBM	C.CAPACITOR CH 16V 0.39U	2	
C4026-28	ECHU1C104JB	P.CAPACITOR 16V 0.1U	3	
C4029	ECUX1H333KBN	C.CAPACITOR CH 50V 0.033U	1	
C4030	ECUX1E104KBN	C.CAPACITOR CH 25V 0.1U	1	
C4031	ECEV1CV220Q	E.CAPACITOR CH 16V 22U	1	
C4032,33	ECUM1E104ZFN	C.CAPACITOR CH 25V 0.1U	2	
C4034	ECEV1CV470Q	E.CAPACITOR CH 16V 47U	1	
C4035	ECUM1H222KBN	C.CAPACITOR CH 50V 2200P	1	
C4036	ECUM1H102KBN	C.CAPACITOR CH 50V 1000P	1	
C4037	ECEV1EN4R7Q	E.CAPACITOR CH 25V 4.7U	1	
C4038	ECEV1CV220Q	E.CAPACITOR CH 16V 22U	1	
C4039,40	ECUM1E104ZFN	C.CAPACITOR CH 25V 0.1U	2	
C4041	ECEV1CV470Q	E.CAPACITOR CH 16V 47U	1	
C4042	ECEV1EN4R7Q	E.CAPACITOR CH 25V 4.7U	1	
C4043	ECUM1H822KBN	C.CAPACITOR CH 50V 8200P	1	
C4044	ECUM1H103KBN	C.CAPACITOR CH 50V 0.01U	1	
C4045	ECUM1H182KBN	C.CAPACITOR CH 50V 1800P	1	
C4046	ECUM1H103KBN	C.CAPACITOR CH 50V 0.01U	1	
C4047	ECUX1C224KBM	C.CAPACITOR CH 16V 0.22U	1	
C4048	ECUM1H102KBN	C.CAPACITOR CH 50V 1000P	1	
C4049	ECUX1C105KBM	C.CAPACITOR CH 16V 1U	1	
C4050	ECHU1C104JB	P.CAPACITOR 16V 0.1U	1	
C4052	ECUM1H471JCN	C.CAPACITOR CH 50V 470P	1	
C4054	ECUM1H103KBN	C.CAPACITOR CH 50V 0.01U	1	
C4056	ECUM1H103KBN	C.CAPACITOR CH 50V 0.01U	1	
C4101,02	ECUM1E104ZFN	C.CAPACITOR CH 25V 0.1U	2	
C4103,04	ECUM1H820JCN	C.CAPACITOR CH 50V 82P	2	
C4105-07	ECEV1EN4R7Q	E.CAPACITOR CH 25V 4.7U	3	
C4108	ECEV0JV220Q	E.CAPACITOR CH6.3V 22U	1	
C4109	ECEV1CV100Q	E.CAPACITOR CH 16V 10U	1	
C4110	ECUM1H151JCN	C.CAPACITOR CH 50V 150P	1	
C4111,12	ECUX1C105KBM	C.CAPACITOR CH 16V 1U	2	
C4113,14	ECUM1H151JCN	C.CAPACITOR CH 50V 150P	2	
C4115,16	ECUX1C105KBM	C.CAPACITOR CH 16V 1U	2	
C4117	ECUM1H151JCN	C.CAPACITOR CH 50V 150P	1	
C4118	ECEV0JV220Q	E.CAPACITOR CH6.3V 22U	1	
C4119	ECEV1CV100Q	E.CAPACITOR CH 16V 10U	1	
C4120,21	ECUM1E104ZFN	C.CAPACITOR CH 25V 0.1U	2	
C4122	ECEV0JV220Q	E.CAPACITOR CH6.3V 22U	1	
C4123-25	ECUM1E104ZFN	C.CAPACITOR CH 25V 0.1U	3	
C4126	ECUM1H222KBN	C.CAPACITOR CH 50V 2200P	1	
C4127,28	ECEV0JV220Q	E.CAPACITOR CH6.3V 22U	2	
C4129	ECUM1E104ZFN	C.CAPACITOR CH 25V 0.1U	1	
C4130	ECEV0JV220Q	E.CAPACITOR CH6.3V 22U	1	
C4134,35	ECEA1HGE330	E.CAPACITOR 50V 33U	2	
C4136,37	ECUM1H030CCN	C.CAPACITOR CH 50V 3P	2	
C4138	ECEV1EN4R7Q	E.CAPACITOR CH 25V 4.7U	1	
C4139	ECEV1CV220Q	E.CAPACITOR CH 16V 22U	1	
C4140,41	ECUM1E104ZFN	C.CAPACITOR CH 25V 0.1U	2	
C4142	ECEV1CV220Q	E.CAPACITOR CH 16V 22U	1	
C4143-46	ECUM1E104ZFN	C.CAPACITOR CH 25V 0.1U	4	
C4147,48	ECUX1C105KBM	C.CAPACITOR CH 16V 1U	2	

Ref.No.	Part No.	Part Name & Description	Pcs	Remarks
C4201,02	ECUM1E104ZFN	C.CAPACITOR CH 25V 0.1U	2	
C4203	ECUM1H470JCN	C.CAPACITOR CH 50V 47P	1	
C4204,05	ECEV1CV100Q	E.CAPACITOR CH 16V 10U	2	
C4206	ECUM1H103KBN	C.CAPACITOR CH 50V 0.01U	1	
C4207	ECUM1H470JCN	C.CAPACITOR CH 50V 47P	1	
C4208	ECUM1H103KBN	C.CAPACITOR CH 50V 0.01U	1	
C4209,10	ECEV1CV100Q	E.CAPACITOR CH 16V 10U	2	
C4211	ECEV1CV220Q	E.CAPACITOR CH 16V 22U	1	
C4212	ECUM1E104ZFN	C.CAPACITOR CH 25V 0.1U	1	
C4213	ECEV1CV220Q	E.CAPACITOR CH 16V 22U	1	
C4214	ECUM1E104ZFN	C.CAPACITOR CH 25V 0.1U	1	
C4215	ECEV1CV470Q	E.CAPACITOR CH 16V 47U	1	
C4216,17	ECEA1CGE101	E.CAPACITOR 16V 100U	2	
C4218	ECEV1CV220Q	E.CAPACITOR CH 16V 22U	1	
C4219	ECUM1E104ZFN	C.CAPACITOR CH 25V 0.1U	1	
C4220	ECEV1CV220Q	E.CAPACITOR CH 16V 22U	1	
C4221	ECUM1E104ZFN	C.CAPACITOR CH 25V 0.1U	1	
C4222	ECEV1CV470Q	E.CAPACITOR CH 16V 47U	1	
C4223-25	ECUM1E104ZFN	C.CAPACITOR CH 25V 0.1U	3	
C4226	ECEV1CV100Q	E.CAPACITOR CH 16V 10U	1	
C4227,28	ECUX1C474KBM	C.CAPACITOR CH 16V 0.47U	2	
C4229,30	ECUM1H472KBN	C.CAPACITOR CH 50V 4700P	2	
C4231	ECUM1H103KBN	C.CAPACITOR CH 50V 0.01U	1	
C4232	ECEV1CV100Q	E.CAPACITOR CH 16V 10U	1	
C4233	ECHU1H223JB	P.CAPACITOR 50V 0.022U	1	
C4234	ECEV1HV4R7Q	E.CAPACITOR CH 50V 4.7U	1	
C4235	VCF2JAB681J	C.CAPACITOR 630V 680P	1	
C4236	ECUX1C474KBM	C.CAPACITOR CH 16V 0.47U	1	
C4237	ECUM1H103KBN	C.CAPACITOR CH 50V 0.01U	1	
C4238	ECUX1C474KBM	C.CAPACITOR CH 16V 0.47U	1	
C4239	ECUM1E104ZFN	C.CAPACITOR CH 25V 0.1U	1	
C4240	ECEV1CV220Q	E.CAPACITOR CH 16V 22U	1	
C4241	ECUM1E104ZFN	C.CAPACITOR CH 25V 0.1U	1	
C4242	VCF2GAB682J	C.CAPACITOR 400V 6800P	1	
C4243	ECUM1H103KBN	C.CAPACITOR CH 50V 0.01U	1	
C4244	ECEV1CV220Q	E.CAPACITOR CH 16V 22U	1	
C4245	VCF2GAB682J	C.CAPACITOR 400V 6800P	1	
C4246,47	ECUM1H471JCN	C.CAPACITOR CH 50V 470P	2	
C4303-06	ECUM1H103KBN	C.CAPACITOR CH 50V 0.01U	4	
C4307,08	ECUM1H103ZFN	C.CAPACITOR CH 50V 0.01U	2	
C4401	ECEV1CV220Q	E.CAPACITOR CH 16V 22U	1	
C4402	ECUM1E104ZFN	C.CAPACITOR CH 25V 0.1U	1	
C4403	ECEV0JV101Q	E.CAPACITOR CH6.3V 100U	1	
C4404-06	ECUM1E104ZFN	C.CAPACITOR CH 25V 0.1U	3	
C4407	ECEV1CV220Q	E.CAPACITOR CH 16V 22U	1	
C4408	ECUM1E104ZFN	C.CAPACITOR CH 25V 0.1U	1	
C4409	ECEV1CV100Q	E.CAPACITOR CH 16V 10U	1	
C4410-13	ECUM1E104ZFN	C.CAPACITOR CH 25V 0.1U	4	
C4414	ECUM1H103KBN	C.CAPACITOR CH 50V 0.01U	1	
C4415	ECEV0JV101Q	E.CAPACITOR CH6.3V 100U	1	
C4416	ECUM1E104ZFN	C.CAPACITOR CH 25V 0.1U	1	
C4417	ECUM1H103KBN	C.CAPACITOR CH 50V 0.01U	1	
C4418	ECEV1CN100Q	E.CAPACITOR CH 16V 10U	1	
C4501-03	ECUM1E104ZFN	C.CAPACITOR CH 25V 0.1U	3	
C4504,05	ECUM1H103KBN	C.CAPACITOR CH 50V 0.01U	2	
D4101	MA152A	DIODE	1	
D4102-04	MA157	DIODE	3	
D4201,02	MA157	DIODE	2	
D4203-05	MA152A	DIODE	3	
FL4001	EIR7QF012B	TRANSFORMER	1	
FL4002	VLF1069	FILTER	1	
FL4201,02	VLF0941C223	FILTER	2	
IC4001	NJM4580ED	IC	1	
IC4002	MC14053BF	IC	1	
IC4003	CXA1102M	IC	1	
IC4004,05	NJM4580ED	IC	2	
IC4006	MC14052BF	IC	1	
IC4008	NJM4580ED	IC	1	
IC4009	AN78N09	IC	1	
IC4010	AN79N09	IC	1	
IC4011,12	NJM4580ED	IC	2	
IC4013	MC14053BF	IC	1	

Ref.No.	Part No.	Part Name & Description	Pcs	Remarks
IC4014	NJM4580ED	IC	1	
IC4015	MC14053BDT	IC	1	
IC4101,02	AD7945BR	IC	2	
IC4103-05	NJM4580ED	IC	3	
IC4106	MC14053BF	IC	1	
IC4107	NJM4580ED	IC	1	
IC4108	XC62AP3002P	IC	1	
IC4109	AK4503VF	IC	1	
IC4110	T74VHCT244F	IC	1	
IC4111	T74VHC244F	IC	1	
IC4112	NJM4580ED	IC	1	
IC4113	MC14052BF	IC	1	
IC4114	NJM4580ED	IC	1	
IC4115	NJM78L05UA	IC	1	
IC4116	NJM79L05UA	IC	1	
IC4117	MC14053BF	IC	1	
IC4201	MC14052BF	IC	1	
IC4202	NJM4580ED	IC	1	
IC4203	NJM2043MD	IC	1	
IC4204,05	AQV212SX	IC	2	
IC4206	AN78N09	IC	1	
IC4207	TC4W53F	IC	1	
IC4301,02	SN74S1051NS	IC	2	
IC4303	74F245SJ	IC	1	
IC4304	74F541SJ	IC	1	
IC4305	74AC139SJ	IC	1	
IC4306	TC7SU04F	IC	1	
IC4307,08	UPD71055GB	IC	2	
IC4401	TC4W53F	IC	1	
IC4402	MC74HC74AF	IC	1	
IC4403	MC74HC541AF	IC	1	
IC4404	MB621926	IC	1	
IC4405	MB81480070	IC	1	
IC4406	NJM78L05UA	IC	1	
IC4407	AK4320VM	IC	1	
IC4408	TC4W53F	IC	1	
IC4501	MB621926	IC	1	
IC4502,03	MC74HC164AF	IC	2	
IC4504	TC7SU04F	IC	1	
IC4505	TC7W74F	IC	1	
IC4506	TC4W53F	IC	1	
IC4507	MB81480070	IC	1	
L4001	VLQ0423J472	COIL 4700UH	1	
P4001	VJP3454B096	CONNECTOR (MALE)	1	
P4002	VJP1230T	CONNECTOR (MALE) 3P	1	
P4003	VJP1233T	CONNECTOR (MALE) 6P	1	
Q4001,02	2SD1149-R	TRANSISTOR	2	
Q4003	2SB792-R	TRANSISTOR	1	
Q4004,05	2SD602A-R	TRANSISTOR	2	
Q4006	2SB710A-R	TRANSISTOR	1	
Q4101-03	2SD1328	TRANSISTOR	3	
Q4201	2SD1994A-R	TRANSISTOR	1	
Q4202	2SB1322A-R	TRANSISTOR	1	
Q4203	2SD1994A-R	TRANSISTOR	1	
Q4204	2SB1322A-R	TRANSISTOR	1	
Q4205	2SD602A-R	TRANSISTOR	1	
Q4206,07	2SB710A-R	TRANSISTOR	2	
Q4208	2SD602A-R	TRANSISTOR	1	
Q4209	2SB710A-R	TRANSISTOR	1	
Q4210-12	2SD602A-R	TRANSISTOR	3	
Q4213	2SB710A-R	TRANSISTOR	1	
Q4214	2SD602A-R	TRANSISTOR	1	
Q4215	2SB710A-R	TRANSISTOR	1	
Q4216-19	2SD602A-R	TRANSISTOR	4	
QR4001,02	UN2213	TRANSISTOR-RESISTOR	2	
QR4201	UN2213	TRANSISTOR-RESISTOR	1	
R4001	ERJ6GEYF822	M.RESISTOR CH 1/10W 8.2K	1	
R4002	ERJ6GEYG103	M.RESISTOR CH 1/10W 10K	1	
R4003,04	ERJ6GEYF472	M.RESISTOR CH 1/10W 4.7K	2	
R4005	ERJ6GEYG221	M.RESISTOR CH 1/10W 220	1	

Ref.No.	Part No.	Part Name & Description	Pcs	Remarks
R4006	ERJ6GEYF472	M.RESISTOR CH 1/10W 4.7K	1	
R4007	ERJ6GEYG103	M.RESISTOR CH 1/10W 10K	1	
R4008	ERJ6GEYG821	M.RESISTOR CH 1/10W 820	1	
R4009,10	ERJ6GEYG392	M.RESISTOR CH 1/10W 3.9K	2	
R4011	ERJ6GEYF822	M.RESISTOR CH 1/10W 8.2K	1	
R4012	ERJ6GEYG182	M.RESISTOR CH 1/10W 1.8K	1	
R4013	ERJ6RBD433	M.RESISTOR CH 1/10W 43K	1	
R4014,15	ERJ6GEYG103	M.RESISTOR CH 1/10W 10K	2	
R4016	ERJ6GEYJ100	M.RESISTOR CH 1/10W 10	1	
R4017	ERJ6GEYF472	M.RESISTOR CH 1/10W 4.7K	1	
R4018	ERJ6GEYF561	M.RESISTOR CH 1/10W 560	1	
R4019	ERJ6GEYF472	M.RESISTOR CH 1/10W 4.7K	1	
R4020	ERJ6GEYG223	M.RESISTOR CH 1/10W 22K	1	
R4021	ERJ6GEYF472	M.RESISTOR CH 1/10W 4.7K	1	
R4022	ERJ6GEYG103	M.RESISTOR CH 1/10W 10K	1	
R4023,24	ERJ6GEYF472	M.RESISTOR CH 1/10W 4.7K	2	
R4025	ERJ6GEYF473	M.RESISTOR CH 1/10W 47K	1	
R4026	ERJ6GEYG470	M.RESISTOR CH 1/10W 47	1	
R4027	ERJ6GEYG102	M.RESISTOR CH 1/10W 1K	1	
R4028	ERJ6GEYF124	M.RESISTOR CH 1/10W 120K	1	
R4029	ERJ6GEYG222	M.RESISTOR CH 1/10W 2.2K	1	
R4030	ERJ6GEYF393	M.RESISTOR CH 1/10W 39K	1	
R4031	ERJ6GEYF333	M.RESISTOR CH 1/10W 33K	1	
R4032	ERJ6GEYF472	M.RESISTOR CH 1/10W 4.7K	1	
R4033,34	ERJ6GEYG101	M.RESISTOR CH 1/10W 100	2	
R4035	ERJ6RBD152	M.RESISTOR CH 1/10W 1.5K	1	
R4036	ERJ6RBD392	M.RESISTOR CH 1/10W 3.9K	1	
R4037	ERJ6GEY0R00	M.RESISTOR CH 1/10W 0	1	
R4038	ERJ6GEYG101	M.RESISTOR CH 1/10W 100	1	
R4039,40	ERJ6RBD122	M.RESISTOR CH 1/10W 1.2K	2	
R4041	ERJ6RBD823	M.RESISTOR CH 1/10W 82K	1	
R4044	ERJ6GEYG101	M.RESISTOR CH 1/10W 100	1	
R4045	ERJ6GEY0R00	M.RESISTOR CH 1/10W 0	1	
R4046	ERJ6GEYG223	M.RESISTOR CH 1/10W 22K	1	
R4047,48	ERJ6GEYG103	M.RESISTOR CH 1/10W 10K	2	
R4049	ERJ6GEY0R00	M.RESISTOR CH 1/10W 0	1	
R4051	ERJ6GEYG103	M.RESISTOR CH 1/10W 10K	1	
R4052	ERJ6RBD202	M.RESISTOR CH 1/10W 2K	1	
R4053	ERJ6GEYG562	M.RESISTOR CH 1/10W 5.6K	1	
R4054	ERJ6GEYG332	M.RESISTOR CH 1/10W 3.3K	1	
R4055	ERJ6GEYG222	M.RESISTOR CH 1/10W 2.2K	1	
R4056	ERJ6GEYG103	M.RESISTOR CH 1/10W 10K	1	
R4057	ERJ6GEYG222	M.RESISTOR CH 1/10W 2.2K	1	
R4058,59	ERJ6GEYG223	M.RESISTOR CH 1/10W 22K	2	
R4060,61	ERJ6GEYF473	M.RESISTOR CH 1/10W 47K	2	
R4064-66	ERJ6GEYG103	M.RESISTOR CH 1/10W 10K	3	
R4068,69	ERJ6GEY0R00	M.RESISTOR CH 1/10W 0	2	
R4071	ERJ6GEYG104	M.RESISTOR CH 1/10W 100K	1	
R4072	ERJ6GEYG103	M.RESISTOR CH 1/10W 10K	1	
R4073	ERJ6GEY0R00	M.RESISTOR CH 1/10W 0	1	
R4075	ERJ6GEYG103	M.RESISTOR CH 1/10W 10K	1	
R4076	ERJ6GEYG102	M.RESISTOR CH 1/10W 1K	1	
R4078	ERJ6GEYF393	M.RESISTOR CH 1/10W 39K	1	
R4079	ERJ6GEY0R00	M.RESISTOR CH 1/10W 0	1	
R4081	ERJ6GEYG103	M.RESISTOR CH 1/10W 10K	1	
R4082	ERJ6GEYF393	M.RESISTOR CH 1/10W 39K	1	
R4083	ERJ6GEYG103	M.RESISTOR CH 1/10W 10K	1	
R4085	ERJ6GEY0R00	M.RESISTOR CH 1/10W 0	1	
R4090	ERJ6GEY0R00	M.RESISTOR CH 1/10W 0	1	
R4092	ERJ6GEYG104	M.RESISTOR CH 1/10W 100K	1	
R4094	ERJ6GEY0R00	M.RESISTOR CH 1/10W 0	1	
R4096	ERJ6GEYG103	M.RESISTOR CH 1/10W 10K	1	
R4101	ERJ6RBD123	M.RESISTOR CH 1/10W 12K	1	
R4102	ERJ6RBD103	M.RESISTOR CH 1/10W 10K	1	
R4103	ERJ6GEYG103	M.RESISTOR CH 1/10W 10K	1	
R4104	ERJ6RED124	M.RESISTOR CH 1/10W 120K	1	
R4105	ERJ6RBD273	M.RESISTOR CH 1/10W 27K	1	
R4106	ERJ6RBD682	M.RESISTOR CH 1/10W 6.8K	1	
R4107	ERJ6RBD123	M.RESISTOR CH 1/10W 12K	1	
R4108	ERJ6RBD822	M.RESISTOR CH 1/10W 8.2K	1	
R4109	ERJ6GEYG470	M.RESISTOR CH 1/10W 47	1	
R4110	ERJ6GEYG103	M.RESISTOR CH 1/10W 10K	1	
R4111	ERJ6GEYG222	M.RESISTOR CH 1/10W 2.2K	1	
R4112	ERJ6RBD912	M.RESISTOR CH 1/10W 9.1K	1	
R4113	ERJ6GEYG103	M.RESISTOR CH 1/10W 10K	1	

Ref.No.	Part No.	Part Name & Description	Pcs	Remarks
R4114	ERJ6GEYF473	M.RESISTOR CH 1/10W 47K	1	
R4115	ERJ6GEYG101	M.RESISTOR CH 1/10W 100	1	
R4116	ERJ6GEYG104	M.RESISTOR CH 1/10W 100K	1	
R4117	ERJ6GEYG103	M.RESISTOR CH 1/10W 10K	1	
R4118	ERJ6RBD102	M.RESISTOR CH 1/10W 1K	1	
R4119	ERJ6RBD153	M.RESISTOR CH 1/10W 15K	1	
R4121	ERJ6GEY0R00	M.RESISTOR CH 1/10W 0	1	
R4122-29	ERJ6RBD103	M.RESISTOR CH 1/10W 10K	8	
R4131,32	ERJ6GEYJ100	M.RESISTOR CH 1/10W 10	2	
R4134	ERJ6GEYF472	M.RESISTOR CH 1/10W 4.7K	1	
R4135	ERJ6GEY0R00	M.RESISTOR CH 1/10W 0	1	
R4136	ERJ6GEYG471	M.RESISTOR CH 1/10W 470	1	
R4137,38	ERJ6GEYG103	M.RESISTOR CH 1/10W 10K	2	
R4139,40	ERJ6GEYF472	M.RESISTOR CH 1/10W 4.7K	2	
R4142	ERJ6GEY0R00	M.RESISTOR CH 1/10W 0	1	
R4143	ERJ12YJ621	M.RESISTOR CH 1/2W 620	1	
R4144	ERJ6RBD223	M.RESISTOR CH 1/10W 22K	1	
R4145	ERJ6RBD123	M.RESISTOR CH 1/10W 12K	1	
R4146,47	ERJ6RBD473	M.RESISTOR CH 1/10W 47K	2	
R4148	ERJ6RBD123	M.RESISTOR CH 1/10W 12K	1	
R4149	ERJ6RBD333	M.RESISTOR CH 1/10W 33K	1	
R4150	ERJ6RBD332	M.RESISTOR CH 1/10W 3.3K	1	
R4151	ERJ6RHD2101	M.RESISTOR CH 1/10W 2.1K	1	
R4152	ERJ6GEYJ335	M.RESISTOR CH 1/10W 3.3M	1	
R4153	ERJ6RBD333	M.RESISTOR CH 1/10W 33K	1	
R4154	ERJ6RBD332	M.RESISTOR CH 1/10W 3.3K	1	
R4155	ERJ6RHD2101	M.RESISTOR CH 1/10W 2.1K	1	
R4156	ERJ6GEYJ335	M.RESISTOR CH 1/10W 3.3M	1	
R4157,58	ERJ6RBD472	M.RESISTOR CH 1/10W 4.7K	2	
R4159	ERJ6RED470	M.RESISTOR CH 1/10W 47	1	
R4160,61	ERJ6RBD472	M.RESISTOR CH 1/10W 4.7K	2	
R4162	ERJ6RED470	M.RESISTOR CH 1/10W 47	1	
R4163	ERJ6RBD152	M.RESISTOR CH 1/10W 1.5K	1	
R4164	ERJ6RBD102	M.RESISTOR CH 1/10W 1K	1	
R4165	ERJ6GEYG103	M.RESISTOR CH 1/10W 10K	1	
R4166	ERJ6RBD472	M.RESISTOR CH 1/10W 4.7K	1	
R4169	ERJ6GEYG563	M.RESISTOR CH 1/10W 56K	1	
R4170	ERJ6RBD102	M.RESISTOR CH 1/10W 1K	1	
R4171	ERJ6RBD151	M.RESISTOR CH 1/10W 150	1	
R4172	ERJ6RBD152	M.RESISTOR CH 1/10W 1.5K	1	
R4173	ERJ6RBD471	M.RESISTOR CH 1/10W 470	1	
R4174	ERJ6RBD103	M.RESISTOR CH 1/10W 10K	1	
R4175	ERJ6RBD222	M.RESISTOR CH 1/10W 2.2K	1	
R4176	ERJ6RBD561	M.RESISTOR CH 1/10W 560	1	
R4177	ERJ6RBD103	M.RESISTOR CH 1/10W 10K	1	
R4178	ERJ6RBD222	M.RESISTOR CH 1/10W 2.2K	1	
R4179	ERJ6RBD561	M.RESISTOR CH 1/10W 560	1	
R4201	ERJ6RBD301	M.RESISTOR CH 1/10W 300	1	
R4202	ERJ6RBD472	M.RESISTOR CH 1/10W 4.7K	1	
R4203	ERJ6RBD272	M.RESISTOR CH 1/10W 2.7K	1	
R4204	ERJ6RBD123	M.RESISTOR CH 1/10W 12K	1	
R4205	ERJ6RBD472	M.RESISTOR CH 1/10W 4.7K	1	
R4206	ERJ6RBD102	M.RESISTOR CH 1/10W 1K	1	
R4207	ERJ6RBD103	M.RESISTOR CH 1/10W 10K	1	
R4208	ERJ6GEYG563	M.RESISTOR CH 1/10W 56K	1	
R4209	ERJ6RBD472	M.RESISTOR CH 1/10W 4.7K	1	
R4210	ERJ6RBD271	M.RESISTOR CH 1/10W 270	1	
R4211	ERJ6RBD153	M.RESISTOR CH 1/10W 15K	1	
R4212	ERJ6RBD472	M.RESISTOR CH 1/10W 4.7K	1	
R4213	ERJ6GEYG105	M.RESISTOR CH 1/10W 1M	1	
R4214,15	ERJ6RBD153	M.RESISTOR CH 1/10W 15K	2	
R4216	ERJ6RBD472	M.RESISTOR CH 1/10W 4.7K	1	
R4217	ERJ6RBD153	M.RESISTOR CH 1/10W 15K	1	
R4218,19	ERJ6RBD472	M.RESISTOR CH 1/10W 4.7K	2	
R4220	ERJ6GEYG105	M.RESISTOR CH 1/10W 1M	1	
R4221	ERJ6RBD153	M.RESISTOR CH 1/10W 15K	1	
R4222	ERJ6GEYJ100	M.RESISTOR CH 1/10W 10	1	
R4223,24	ERJ6GEYG562	M.RESISTOR CH 1/10W 5.6K	2	
R4225	ERJ6GEYJ100	M.RESISTOR CH 1/10W 10	1	
R4226,27	ERJ6GEYG562	M.RESISTOR CH 1/10W 5.6K	2	
R4228-31	ERJ14YJ100	M.RESISTOR CH 1/4W 10	4	
R4232,33	ERJ14YJ220	M.RESISTOR CH 1/4W 22	2	
R4234	ERJ6GEYG102	M.RESISTOR CH 1/10W 1K	1	
R4235,36	ERJ6GEYG103	M.RESISTOR CH 1/10W 10K	2	
R4237	ERJ6GEYG102	M.RESISTOR CH 1/10W 1K	1	

Ref.No.	Part No.	Part Name & Description	Pcs	Remarks
R4238,39	ERJ6GEYF561	M.RESISTOR CH 1/10W 560	2	
R4240,41	ERJ6GEYG103	M.RESISTOR CH 1/10W 10K	2	
R4242	ERJ6GEY0R00	M.RESISTOR CH 1/10W 0	1	
R4243	ERJ6GEYG103	M.RESISTOR CH 1/10W 10K	1	
R4244	ERJ6GEYG332	M.RESISTOR CH 1/10W 3.3K	1	
R4245,46	ERJ6GEYG563	M.RESISTOR CH 1/10W 56K	2	
R4247	ERJ6GEYF472	M.RESISTOR CH 1/10W 4.7K	1	
R4248	ERJ6GEYG102	M.RESISTOR CH 1/10W 1K	1	
R4249,50	ERJ6GEYG563	M.RESISTOR CH 1/10W 56K	2	
R4251	ERJ6GEYF472	M.RESISTOR CH 1/10W 4.7K	1	
R4252	ERJ6GEYF333	M.RESISTOR CH 1/10W 33K	1	
R4253	ERJ6GEYF472	M.RESISTOR CH 1/10W 4.7K	1	
R4254	ERJ6GEYG101	M.RESISTOR CH 1/10W 100	1	
R4255	ERJ6GEYG470	M.RESISTOR CH 1/10W 47	1	
R4256	ERJ6GEYF123	M.RESISTOR CH 1/10W 12K	1	
R4257	ERJ6GEYG152	M.RESISTOR CH 1/10W 1.5K	1	
R4258	ERJ6GEYG220	M.RESISTOR CH 1/10W 22	1	
R4259	ERJ6GEYG563	M.RESISTOR CH 1/10W 56K	1	
R4260	ERJ6GEYG332	M.RESISTOR CH 1/10W 3.3K	1	
R4261	ERJ6GEYF472	M.RESISTOR CH 1/10W 4.7K	1	
R4262	ERJ6GEYG563	M.RESISTOR CH 1/10W 56K	1	
R4263	ERJ6GEYG332	M.RESISTOR CH 1/10W 3.3K	1	
R4264	ERJ6GEYF472	M.RESISTOR CH 1/10W 4.7K	1	
R4265,66	ERJ6GEYG563	M.RESISTOR CH 1/10W 56K	2	
R4267,68	ERJ6GEYG471	M.RESISTOR CH 1/10W 470	2	
R4269	ERJ6GEYG180	M.RESISTOR CH 1/10W 18	1	
R4270,71	ERJ6GEYG103	M.RESISTOR CH 1/10W 10K	2	
R4272	ERJ6GEYG222	M.RESISTOR CH 1/10W 2.2K	1	
R4273	ERJ6GEYJ1R0	M.RESISTOR CH 1/10W 1	1	
R4274,75	ERJ6GEYG471	M.RESISTOR CH 1/10W 470	2	
R4276	ERJ6GEYG180	M.RESISTOR CH 1/10W 18	1	
R4277	ERJ6GEYJ1R0	M.RESISTOR CH 1/10W 1	1	
R4278	ERJ6GEYF123	M.RESISTOR CH 1/10W 12K	1	
R4279,80	ERJ6GEY0R00	M.RESISTOR CH 1/10W 0	2	
R4281	ERJ6RBD512	M.RESISTOR CH 1/10W 5.1K	1	
R4282	ERJ6RBD301	M.RESISTOR CH 1/10W 300	1	
R4283	ERJ6RBD391	M.RESISTOR CH 1/10W 390	1	
R4284	ERJ6RBD222	M.RESISTOR CH 1/10W 2.2K	1	
R4285	ERJ6RBD103	M.RESISTOR CH 1/10W 10K	1	
R4301,02	ERJ6GEY0R00	M.RESISTOR CH 1/10W 0	2	
R4303-16	ERJ6GEYG103	M.RESISTOR CH 1/10W 10K	14	
R4401	ERJ6GEY0R00	M.RESISTOR CH 1/10W 0	1	
R4402	ERJ6GEYF473	M.RESISTOR CH 1/10W 47K	1	
R4403-06	ERJ6GEYG331	M.RESISTOR CH 1/10W 330	4	
R4407	ERJ6GEYF473	M.RESISTOR CH 1/10W 47K	1	
R4408	ERJ6GEY0R00	M.RESISTOR CH 1/10W 0	1	
R4409	ERJ6GEYF473	M.RESISTOR CH 1/10W 47K	1	
R4410	ERJ6GEYJ100	M.RESISTOR CH 1/10W 10	1	
R4411-13	ERJ6GEY0R00	M.RESISTOR CH 1/10W 0	3	
R4414,15	ERJ6GEYF473	M.RESISTOR CH 1/10W 47K	2	
R4417-20	ERJ6GEY0R00	M.RESISTOR CH 1/10W 0	4	
R4421	ERJ6GEYG103	M.RESISTOR CH 1/10W 10K	1	
R4423	ERJ6GEY0R00	M.RESISTOR CH 1/10W 0	1	
R4425	ERJ6GEY0R00	M.RESISTOR CH 1/10W 0	1	
R4427	ERJ6GEY0R00	M.RESISTOR CH 1/10W 0	1	
R4430	ERJ6GEY0R00	M.RESISTOR CH 1/10W 0	1	
R4502-05	ERJ6GEYG331	M.RESISTOR CH 1/10W 330	4	
R4506-11	ERJ6GEY0R00	M.RESISTOR CH 1/10W 0	6	
R4513,14	ERJ6GEY0R00	M.RESISTOR CH 1/10W 0	2	
R4517	ERJ6GEY0R00	M.RESISTOR CH 1/10W 0	1	
R4519	ERJ6GEY0R00	M.RESISTOR CH 1/10W 0	1	
SW4001	VSS0367-04B	SWITCH	1	
SW4002	VSS0342	SWITCH	1	
SW4101	VSS0126	SWITCH	1	
T4201	VLT0866	TRANSFORMER	1	
T4202	VLT0868	TRANSFORMER	1	
T4203,04	VLT0867	TRANSFORMER	2	
TG4101	VJR0646	TEST POINT	1	
TG4201	VJR0646	TEST POINT	1	
TP4001-03	VJR0646	TEST POINT	3	
TP4101-03	VJR0646	TEST POINT	3	

Ref.No.	Part No.	Part Name & Description	Pcs	Remarks
TP4201-03	VJR0646	TEST POINT	3	
VR4001	VRV0112B103	V.RESISTOR 10K	1	
VR4002	VRV0064B503	V.RESISTOR 50K	1	
VR4003	VRV0112B502	V.RESISTOR 5K	1	
VR4005	VRV0112B203	V.RESISTOR 20K	1	
VR4006	VRV0112B103	V.RESISTOR 10K	1	
VR4202	VRV0112B104	V.RESISTOR 100K	1	
		MISCELLANEOUS		
	VML2143	CARD PULLER	1	
	VML2144	CARD PULLER	1	
■E10	VEP85048A	H3 EQ P.C.BOARD	1	(RTL)
C5001-04	ECUM1H104ZFN	C.CAPACITOR CH 50V 0.1U	4	
C5005,06	ECUX1C105ZFN	C.CAPACITOR CH 16V 1U	2	
C5008,09	ECUM1H104ZFN	C.CAPACITOR CH 50V 0.1U	2	
C5011,12	ECUM1H104ZFN	C.CAPACITOR CH 50V 0.1U	2	
C5013	ECUX1C105ZFN	C.CAPACITOR CH 16V 1U	1	
C5014,15	ECUM1H104ZFN	C.CAPACITOR CH 50V 0.1U	2	
C5016,17	ECUX1H122KBN	C.CAPACITOR CH 50V 1200P	2	
C5018,19	ECUM1H104ZFN	C.CAPACITOR CH 50V 0.1U	2	
C5020	ECUX1H102JCN	C.CAPACITOR CH 50V 1000P	1	
C5021-29	ECUM1H104ZFN	C.CAPACITOR CH 50V 0.1U	9	
C5101-04	ECUM1H104ZFN	C.CAPACITOR CH 50V 0.1U	4	
C5105	ECUX1C105ZFN	C.CAPACITOR CH 16V 1U	1	
C5107	ECUX1C105ZFN	C.CAPACITOR CH 16V 1U	1	
C5108,09	ECUM1H104ZFN	C.CAPACITOR CH 50V 0.1U	2	
C5111-16	ECUM1H104ZFN	C.CAPACITOR CH 50V 0.1U	6	
C5117	ECUX1C105ZFN	C.CAPACITOR CH 16V 1U	1	
C5118-25	ECUM1H104ZFN	C.CAPACITOR CH 50V 0.1U	8	
C5126,27	ECUX1H122KBN	C.CAPACITOR CH 50V 1200P	2	
C5128	ECUX1H102JCN	C.CAPACITOR CH 50V 1000P	1	
C5129-37	ECUM1H104ZFN	C.CAPACITOR CH 50V 0.1U	9	
C5202-11	ECUM1H104ZFN	C.CAPACITOR CH 50V 0.1U	10	
C5213-15	ECUM1H104ZFN	C.CAPACITOR CH 50V 0.1U	3	
C5217-19	ECUM1H104ZFN	C.CAPACITOR CH 50V 0.1U	3	
C5220	ECUX1C105ZFN	C.CAPACITOR CH 16V 1U	1	
C5223-30	ECUM1H104ZFN	C.CAPACITOR CH 50V 0.1U	8	
C5231	ECUM1H152KBN	C.CAPACITOR CH 50V 1500P	1	
C5232,33	ECUM1H104ZFN	C.CAPACITOR CH 50V 0.1U	2	
C5234	ECUM1H821JCN	C.CAPACITOR CH 50V 820P	1	
C5235	ECUM1H104ZFN	C.CAPACITOR CH 50V 0.1U	1	
C5236	ECUX1C104KBN	C.CAPACITOR CH 16V 0.1U	1	
C5238-40	ECUM1H104ZFN	C.CAPACITOR CH 50V 0.1U	3	
C5241	ECUM1H680JCN	C.CAPACITOR CH 50V 68P	1	
C5242-47	ECUM1H104ZFN	C.CAPACITOR CH 50V 0.1U	6	
C5249,50	ECUM1H104ZFN	C.CAPACITOR CH 50V 0.1U	2	
C5251,52	ECUM1H152KBN	C.CAPACITOR CH 50V 1500P	2	
C5253	ECUM1H104ZFN	C.CAPACITOR CH 50V 0.1U	1	
C5254	ECUM1H152KBN	C.CAPACITOR CH 50V 1500P	1	
C5256	ECUM1H152KBN	C.CAPACITOR CH 50V 1500P	1	
C5258-62	ECUM1H104ZFN	C.CAPACITOR CH 50V 0.1U	5	
C5266	ECUM1H104ZFN	C.CAPACITOR CH 50V 0.1U	1	
C5401-03	ECUM1H104ZFN	C.CAPACITOR CH 50V 0.1U	3	
C5405-11	ECUM1H104ZFN	C.CAPACITOR CH 50V 0.1U	7	
C5413-16	ECUM1H104ZFN	C.CAPACITOR CH 50V 0.1U	4	
C5418,19	ECUM1H104ZFN	C.CAPACITOR CH 50V 0.1U	2	
C5420	ECUX1C105ZFN	C.CAPACITOR CH 16V 1U	1	
C5423-32	ECUM1H104ZFN	C.CAPACITOR CH 50V 0.1U	10	
C5433	ECUM1H152KBN	C.CAPACITOR CH 50V 1500P	1	
C5434	ECUM1H104ZFN	C.CAPACITOR CH 50V 0.1U	1	
C5435	ECUM1H821JCN	C.CAPACITOR CH 50V 820P	1	
C5436	ECUM1H104ZFN	C.CAPACITOR CH 50V 0.1U	1	
C5437	ECUX1C104KBN	C.CAPACITOR CH 16V 0.1U	1	
C5438	ECUX1C105ZFN	C.CAPACITOR CH 16V 1U	1	
C5439-41	ECUM1H104ZFN	C.CAPACITOR CH 50V 0.1U	3	
C5442	ECUM1H680JCN	C.CAPACITOR CH 50V 68P	1	
C5443-52	ECUM1H104ZFN	C.CAPACITOR CH 50V 0.1U	10	
C5453,54	ECUM1H152KBN	C.CAPACITOR CH 50V 1500P	2	
C5455	ECUM1H104ZFN	C.CAPACITOR CH 50V 0.1U	1	

Ref.No.	Part No.	Part Name & Description	Pcs	Remarks
C5456,57	ECUM1H152KBN	C.CAPACITOR CH 50V 1500P	2	
C5460-64	ECUM1H104ZFN	C.CAPACITOR CH 50V 0.1U	5	
C5466	ECUM1H104ZFN	C.CAPACITOR CH 50V 0.1U	1	
C5601-04	ECUM1H104ZFN	C.CAPACITOR CH 50V 0.1U	4	
C5605	ECUX1H040CCN	C.CAPACITOR CH 50V 4P	1	
C5606-09	ECUM1H104ZFN	C.CAPACITOR CH 50V 0.1U	4	
C5611	ECUM1H104ZFN	C.CAPACITOR CH 50V 0.1U	1	
C5613,14	ECUM1H104ZFN	C.CAPACITOR CH 50V 0.1U	2	
C5619-22	ECUM1H104ZFN	C.CAPACITOR CH 50V 0.1U	4	
C5625	ECUM1H104ZFN	C.CAPACITOR CH 50V 0.1U	1	
C5627	ECUM1H104ZFN	C.CAPACITOR CH 50V 0.1U	1	
C5630	ECUM1H104ZFN	C.CAPACITOR CH 50V 0.1U	1	
C5631	ECUM1H270JCN	C.CAPACITOR CH 50V 27P	1	
C5633-36	ECUM1H104ZFN	C.CAPACITOR CH 50V 0.1U	4	
C5638	ECUM1H104ZFN	C.CAPACITOR CH 50V 0.1U	1	
C5643	ECUM1H104ZFN	C.CAPACITOR CH 50V 0.1U	1	
C5701-05	ECUM1H104ZFN	C.CAPACITOR CH 50V 0.1U	5	
C5710,11	ECUM1H104ZFN	C.CAPACITOR CH 50V 0.1U	2	
C5715,16	ECUM1H104ZFN	C.CAPACITOR CH 50V 0.1U	2	
C5801,02	ECUM1H104ZFN	C.CAPACITOR CH 50V 0.1U	2	
C5806-09	ECUM1H104ZFN	C.CAPACITOR CH 50V 0.1U	4	
C5811-13	ECUM1H104ZFN	C.CAPACITOR CH 50V 0.1U	3	
C5818	ECUM1H100DCN	C.CAPACITOR CH 50V 10P	1	
C5819,20	ECUM1H104ZFN	C.CAPACITOR CH 50V 0.1U	2	
C5822	ECUM1H104ZFN	C.CAPACITOR CH 50V 0.1U	1	
C5901,02	ECUM1H104ZFN	C.CAPACITOR CH 50V 0.1U	2	
C5904	ECUM1H104ZFN	C.CAPACITOR CH 50V 0.1U	1	
C5909	ECUM1H104ZFN	C.CAPACITOR CH 50V 0.1U	1	
C5912	ECEV0JV330Q	E.CAPACITOR CH6.3V 33U	1	
C5913	ECUM1H104ZFN	C.CAPACITOR CH 50V 0.1U	1	
C5951	ECUM1H104ZFN	C.CAPACITOR CH 50V 0.1U	1	
C5952	ECEV1CV470Q	E.CAPACITOR CH 16V 47U	1	
C5953	ECUM1H104ZFN	C.CAPACITOR CH 50V 0.1U	1	
C5954	ECEV1CV220Q	E.CAPACITOR CH 16V 22U	1	
C5955-57	ECUM1H104ZFN	C.CAPACITOR CH 50V 0.1U	3	
C5958	ECEV0JV470Q	E.CAPACITOR CH6.3V 47U	1	
C5959,60	ECUM1H104ZFN	C.CAPACITOR CH 50V 0.1U	2	
C5961	ECEV1CV220Q	E.CAPACITOR CH 16V 22U	1	
C5962,63	ECUM1H104ZFN	C.CAPACITOR CH 50V 0.1U	2	
C5964	ECEV0JV470Q	E.CAPACITOR CH6.3V 47U	1	
C5965,66	ECUM1H104ZFN	C.CAPACITOR CH 50V 0.1U	2	
C5967	ECEV0JV470Q	E.CAPACITOR CH6.3V 47U	1	
C5968,69	ECUM1H104ZFN	C.CAPACITOR CH 50V 0.1U	2	
C5970	ECEV1CV470Q	E.CAPACITOR CH 16V 47U	1	
C5971,72	ECUM1H104ZFN	C.CAPACITOR CH 50V 0.1U	2	
C5973	ECEV0JV470Q	E.CAPACITOR CH6.3V 47U	1	
C5974	ECUM1H104ZFN	C.CAPACITOR CH 50V 0.1U	1	
C5975	ECEA1AGE471	E.CAPACITOR 10V 470U	1	
C5976	ECEV1CV470Q	E.CAPACITOR CH 16V 47U	1	
C5977,78	ECUM1H104ZFN	C.CAPACITOR CH 50V 0.1U	2	
C5979	ECEV1CV220Q	E.CAPACITOR CH 16V 22U	1	
C5980	ECEV1CV470Q	E.CAPACITOR CH 16V 47U	1	
C5981-83	ECUM1H104ZFN	C.CAPACITOR CH 50V 0.1U	3	
C5984	ECEV1CV470Q	E.CAPACITOR CH 16V 47U	1	
C5985	ECUM1H104ZFN	C.CAPACITOR CH 50V 0.1U	1	
C5986	ECEV1CV470Q	E.CAPACITOR CH 16V 47U	1	
C5987,88	ECUM1H104ZFN	C.CAPACITOR CH 50V 0.1U	2	
C5989	ECEV1EV100Q	E.CAPACITOR CH 25V 10U	1	
C5990	ECUM1H104ZFN	C.CAPACITOR CH 50V 0.1U	1	
C5991	ECEV1CV220Q	E.CAPACITOR CH 16V 22U	1	
C5992	ECUM1H104ZFN	C.CAPACITOR CH 50V 0.1U	1	
C5995,96	ECEA1CGE470	E.CAPACITOR 16V 47U	2	
D5001	MA3020	DIODE	1	
D5101	MA3020	DIODE	1	
D5201	MA3036-H	DIODE	1	
D5401	MA3036-H	DIODE	1	
D5402	MA3030-H	DIODE	1	
D5403	MA3033-L	DIODE	1	
D5901	MA152K	DIODE	1	
D5951-62	MA701A	DIODE	12	
FL5951-55	VLF1016A470	FILTER	5	
IC5001	AN3730FA	IC	1	

Ref.No.	Part No.	Part Name & Description	Pcs	Remarks
IC5101	M52055FP	IC	1	
IC5102	AN3730FA	IC	1	
IC5201	TC7S32F	IC	1	
IC5202	MC14053BF	IC	1	
IC5203	NJM319M	IC	1	
IC5204	NJM082BM	IC	1	
IC5205	TC7SH32F	IC	1	
IC5206	NJM084M	IC	1	
IC5207	AN3740FAP	IC	1	
IC5208	MC74HC4066F	IC	1	
IC5209	NJM082BM	IC	1	
IC5401	NJM082BM	IC	1	
IC5402	TC7W08F	IC	1	
IC5403	TC7S32F	IC	1	
IC5404	MC14053BF	IC	1	
IC5405	NJM082BM	IC	1	
IC5406	NJM084M	IC	1	
IC5407	NJM319M	IC	1	
IC5408	AN3740FAP	IC	1	
IC5409	MC74HC4066F	IC	1	
IC5410	NJM082BM	IC	1	
IC5411	T74LCX244F	IC	1	
IC5601	UPC1663G	IC	1	
IC5602	NJM084M	IC	1	
IC5603	CXD2302Q	IC	1	
IC5701	MB88344PFV	IC	1	
IC5702	NJM084M	IC	1	
IC5703	NJM082BM	IC	1	
IC5801,02	74F04SJ	IC	2	
IC5803	74F08SJ	IC	1	
IC5805	74F151ASJ	IC	1	
IC5806	74F157ASJ	IC	1	
IC5807	MC10H124M	IC	1	
IC5810	TC7S32F	IC	1	
IC5901	T160G22-1225	IC	1	
IC5902	TC7W08F	IC	1	
IC5903	S80727ANDQ	IC	1	
IC5951-54	XC62AP3002P	IC	4	
IC5955,56	AN78M05F	IC	2	
IC5957,58	AN79M05F	IC	2	
IC5959	NJM78L09UA	IC	1	
L5701	VLQ0163J100	COIL 10UH	1	
L5801	VLQ0163J8R2	COIL 8.2UH	1	
L5802	VLQ0163J2R7	COIL 2.7UH	1	
L5951-53	VLP0133	COIL	3	
P5951	VJP3454B096	CONNECTOR (MALE)	1	
P5952	VJP1231R	CONNECTOR (MALE)	1	
P5953	VJP1231T	CONNECTOR (MALE) 4P	1	
Q5001	XN5531	TRANSISTOR-RESISTOR	1	
Q5002	2SC2295-C	TRANSISTOR	1	
Q5003	XN5531	TRANSISTOR-RESISTOR	1	
Q5004-12	2SC2295-C	TRANSISTOR	9	
Q5101	XN5531	TRANSISTOR-RESISTOR	1	
Q5102	2SC2295-C	TRANSISTOR	1	
Q5103	XN5531	TRANSISTOR-RESISTOR	1	
Q5104-10	2SC2295-C	TRANSISTOR	7	
Q5202,03	2SC2295-C	TRANSISTOR	2	
Q5204	2SA1022-C	TRANSISTOR	1	
Q5401-03	2SC2295-C	TRANSISTOR	3	
Q5404	2SA1022-C	TRANSISTOR	1	
Q5601,02	2SC2295-C	TRANSISTOR	2	
Q5603	XN5531	TRANSISTOR-RESISTOR	1	
Q5606-08	2SC2295-C	TRANSISTOR	3	
QR5101	UN2213	TRANSISTOR-RESISTOR	1	
QR5401,02	UN2213	TRANSISTOR-RESISTOR	2	
R5004	ERJ6GEYG101	M.RESISTOR CH 1/10W 100	1	
R5006	ERJ6GEYG101	M.RESISTOR CH 1/10W 100	1	
R5007	ERJ6GEYG221	M.RESISTOR CH 1/10W 220	1	
R5008-11	ERJ6GEYG470	M.RESISTOR CH 1/10W 47	4	
R5012	ERJ6GEYG222	M.RESISTOR CH 1/10W 2.2K	1	

Ref.No.	Part No.	Part Name & Description	Pcs	Remarks
R5013,14	ERJ6GEYG470	M.RESISTOR CH 1/10W 47	2	
R5015	ERJ6GEYG221	M.RESISTOR CH 1/10W 220	1	
R5016	ERJ6GEYG222	M.RESISTOR CH 1/10W 2.2K	1	
R5018	ERJ6GEYG470	M.RESISTOR CH 1/10W 47	1	
R5019	ERJ6GEYG391	M.RESISTOR CH 1/10W 390	1	
R5020-22	ERJ6GEYG470	M.RESISTOR CH 1/10W 47	3	
R5023	ERJ6GEYG391	M.RESISTOR CH 1/10W 390	1	
R5025	ERJ6GEYG121	M.RESISTOR CH 1/10W 120	1	
R5026,27	ERJ6GEYG222	M.RESISTOR CH 1/10W 2.2K	2	
R5028	ERJ6GEYG470	M.RESISTOR CH 1/10W 47	1	
R5029	ERJ6GEYG121	M.RESISTOR CH 1/10W 120	1	
R5030	ERJ6GEYG470	M.RESISTOR CH 1/10W 47	1	
R5031	ERJ6GEYG181	M.RESISTOR CH 1/10W 180	1	
R5032	ERJ6GEYG152	M.RESISTOR CH 1/10W 1.5K	1	
R5033	ERJ6GEYG470	M.RESISTOR CH 1/10W 47	1	
R5034	ERJ6GEYG222	M.RESISTOR CH 1/10W 2.2K	1	
R5035,36	ERJ6GEYG470	M.RESISTOR CH 1/10W 47	2	
R5037	ERJ6GEYG222	M.RESISTOR CH 1/10W 2.2K	1	
R5038	ERJ6GEYG470	M.RESISTOR CH 1/10W 47	1	
R5039	ERJ6GEYG222	M.RESISTOR CH 1/10W 2.2K	1	
R5040	ERJ6GEYG470	M.RESISTOR CH 1/10W 47	1	
R5041	ERJ6GEYG102	M.RESISTOR CH 1/10W 1K	1	
R5042	ERJ6GEYG470	M.RESISTOR CH 1/10W 47	1	
R5043	ERJ6GEYF472	M.RESISTOR CH 1/10W 4.7K	1	
R5044	ERJ6GEYG470	M.RESISTOR CH 1/10W 47	1	
R5045	ERJ6GEYG152	M.RESISTOR CH 1/10W 1.5K	1	
R5046,47	ERJ6GEYG122	M.RESISTOR CH 1/10W 1.2K	2	
R5048	ERJ6GEYG470	M.RESISTOR CH 1/10W 47	1	
R5049,50	ERJ6GEYG122	M.RESISTOR CH 1/10W 1.2K	2	
R5051	ERJ6GEYG222	M.RESISTOR CH 1/10W 2.2K	1	
R5052	ERJ6GEYG122	M.RESISTOR CH 1/10W 1.2K	1	
R5053	ERJ6GEYG222	M.RESISTOR CH 1/10W 2.2K	1	
R5054	ERJ6GEYG470	M.RESISTOR CH 1/10W 47	1	
R5101,02	ERJ6GEYG122	M.RESISTOR CH 1/10W 1.2K	2	
R5103	ERJ6GEYG101	M.RESISTOR CH 1/10W 100	1	
R5104,05	ERJ6GEYG122	M.RESISTOR CH 1/10W 1.2K	2	
R5106	ERJ6GEYG101	M.RESISTOR CH 1/10W 100	1	
R5107	ERJ6GEYG221	M.RESISTOR CH 1/10W 220	1	
R5108-11	ERJ6GEYG470	M.RESISTOR CH 1/10W 47	4	
R5112	ERJ6GEYG221	M.RESISTOR CH 1/10W 220	1	
R5114,15	ERJ6GEYG470	M.RESISTOR CH 1/10W 47	2	
R5116	ERJ6GEYG222	M.RESISTOR CH 1/10W 2.2K	1	
R5117	ERJ6GEYG470	M.RESISTOR CH 1/10W 47	1	
R5118	ERJ6GEYG222	M.RESISTOR CH 1/10W 2.2K	1	
R5119	ERJ6GEYG470	M.RESISTOR CH 1/10W 47	1	
R5120	ERJ6GEYG391	M.RESISTOR CH 1/10W 390	1	
R5121	ERJ6GEYG470	M.RESISTOR CH 1/10W 47	1	
R5122	ERJ6GEYG391	M.RESISTOR CH 1/10W 390	1	
R5124	ERJ6GEYG122	M.RESISTOR CH 1/10W 1.2K	1	
R5125	ERJ6GEYG222	M.RESISTOR CH 1/10W 2.2K	1	
R5126	ERJ6GEYG121	M.RESISTOR CH 1/10W 120	1	
R5127	ERJ6GEYG222	M.RESISTOR CH 1/10W 2.2K	1	
R5128,29	ERJ6GEYG470	M.RESISTOR CH 1/10W 47	2	
R5131	ERJ6GEYG121	M.RESISTOR CH 1/10W 120	1	
R5132	ERJ6GEYG181	M.RESISTOR CH 1/10W 180	1	
R5133	ERJ6GEYF473	M.RESISTOR CH 1/10W 47K	1	
R5134	ERJ6GEYG152	M.RESISTOR CH 1/10W 1.5K	1	
R5135,36	ERJ6GEYG470	M.RESISTOR CH 1/10W 47	2	
R5137	ERJ6GEYG222	M.RESISTOR CH 1/10W 2.2K	1	
R5138	ERJ6GEYG470	M.RESISTOR CH 1/10W 47	1	
R5139	ERJ6GEYG222	M.RESISTOR CH 1/10W 2.2K	1	
R5141	ERJ6GEYG102	M.RESISTOR CH 1/10W 1K	1	
R5142	ERJ6GEYF472	M.RESISTOR CH 1/10W 4.7K	1	
R5143	ERJ6GEYG470	M.RESISTOR CH 1/10W 47	1	
R5144	ERJ6GEYG103	M.RESISTOR CH 1/10W 10K	1	
R5145	ERJ6GEYG470	M.RESISTOR CH 1/10W 47	1	
R5146	ERJ6GEYG222	M.RESISTOR CH 1/10W 2.2K	1	
R5147,48	ERJ6GEYG470	M.RESISTOR CH 1/10W 47	2	
R5149	ERJ6GEYG122	M.RESISTOR CH 1/10W 1.2K	1	
R5150,51	ERJ6GEYG222	M.RESISTOR CH 1/10W 2.2K	2	
R5152	ERJ6GEYG470	M.RESISTOR CH 1/10W 47	1	
R5206	ERJ6GEYG470	M.RESISTOR CH 1/10W 47	1	
R5208	ERJ6GEYG103	M.RESISTOR CH 1/10W 10K	1	
R5210	ERJ6GEYG222	M.RESISTOR CH 1/10W 2.2K	1	
R5211	ERJ6GEYG103	M.RESISTOR CH 1/10W 10K	1	

Ref.No.	Part No.	Part Name & Description	Pcs	Remarks
R5212	ERJ6GEYG273	M.RESISTOR CH 1/10W 27K	1	
R5214	ERJ6GEYG222	M.RESISTOR CH 1/10W 2.2K	1	
R5215	ERJ6GEYG682	M.REISITOR CH 1/10W 6.8K	1	
R5216	ERJ6GEYG222	M.RESISTOR CH 1/10W 2.2K	1	
R5217	ERJ6GEYG102	M.RESISTOR CH 1/10W 1K	1	
R5218	ERJ6GEYG222	M.RESISTOR CH 1/10W 2.2K	1	
R5219	ERJ6GEYG103	M.RESISTOR CH 1/10W 10K	1	
R5220	ERJ6GEYG470	M.RESISTOR CH 1/10W 47	1	
R5222,23	ERJ6GEYG470	M.RESISTOR CH 1/10W 47	2	
R5225	ERJ6GEYG222	M.RESISTOR CH 1/10W 2.2K	1	
R5227	ERJ6GEYG103	M.RESISTOR CH 1/10W 10K	1	
R5229	ERJ6GEYG103	M.RESISTOR CH 1/10W 10K	1	
R5230	ERJ6GEYG122	M.RESISTOR CH 1/10W 1.2K	1	
R5231,32	ERJ6GEYG103	M.RESISTOR CH 1/10W 10K	2	
R5233	ERJ6GEYG122	M.RESISTOR CH 1/10W 1.2K	1	
R5234	ERJ6GEYG470	M.RESISTOR CH 1/10W 47	1	
R5235	ERJ6GEYG103	M.RESISTOR CH 1/10W 10K	1	
R5238	ERJ6GEYG122	M.RESISTOR CH 1/10W 1.2K	1	
R5239	ERJ6GEYG470	M.RESISTOR CH 1/10W 47	1	
R5240	ERJ6GEYG222	M.RESISTOR CH 1/10W 2.2K	1	
R5242	ERJ6GEYG222	M.RESISTOR CH 1/10W 2.2K	1	
R5243	ERJ6GEYG122	M.RESISTOR CH 1/10W 1.2K	1	
R5244	ERJ6GEYG102	M.RESISTOR CH 1/10W 1K	1	
R5245	ERJ6GEYG821	M.RESISTOR CH 1/10W 820	1	
R5246	ERJ6GEYF472	M.RESISTOR CH 1/10W 4.7K	1	
R5247	ERJ6GEYG470	M.RESISTOR CH 1/10W 47	1	
R5248	ERJ6GEYG122	M.RESISTOR CH 1/10W 1.2K	1	
R5249	ERJ6GEYG331	M.RESISTOR CH 1/10W 330	1	
R5250	ERJ6GEYG122	M.RESISTOR CH 1/10W 1.2K	1	
R5251	ERJ6GEYG470	M.RESISTOR CH 1/10W 47	1	
R5252	ERJ6GEYG680	M.RESISTOR CH 1/10W 68	1	
R5253	ERJ6GEYG224	M.RESISTOR CH 1/10W 220K	1	
R5255	ERJ6GEYG821	M.RESISTOR CH 1/10W 820	1	
R5256	ERJ6GEYG102	M.RESISTOR CH 1/10W 1K	1	
R5257	ERJ6GEYF822	M.RESISTOR CH 1/10W 8.2K	1	
R5258	ERJ6GEYG122	M.RESISTOR CH 1/10W 1.2K	1	
R5259	ERJ6GEYG182	M.RESISTOR CH 1/10W 1.8K	1	
R5262	ERJ6GEYG332	M.RESISTOR CH 1/10W 3.3K	1	
R5263	ERJ6GEYG122	M.RESISTOR CH 1/10W 1.2K	1	
R5264	ERJ6GEYG153	M.RESISTOR CH 1/10W 15K	1	
R5265	ERJ6GEYG562	M.RESISTOR CH 1/10W 5.6K	1	
R5266	ERJ6GEYF822	M.RESISTOR CH 1/10W 8.2K	1	
R5267	ERJ6GEYG222	M.RESISTOR CH 1/10W 2.2K	1	
R5269	ERJ6GEYG392	M.RESISTOR CH 1/10W 3.9K	1	
R5270	ERJ6GEYG122	M.RESISTOR CH 1/10W 1.2K	1	
R5271	ERJ6GEYG470	M.RESISTOR CH 1/10W 47	1	
R5273	ERJ6GEYG222	M.RESISTOR CH 1/10W 2.2K	1	
R5277	ERJ6GEYG222	M.RESISTOR CH 1/10W 2.2K	1	
R5281	ERJ6GEYG222	M.RESISTOR CH 1/10W 2.2K	1	
R5283,84	ERJ6GEYG470	M.RESISTOR CH 1/10W 47	2	
R5288	ERJ6GEYG122	M.RESISTOR CH 1/10W 1.2K	1	
R5290	ERJ6GEYF822	M.RESISTOR CH 1/10W 8.2K	1	
R5291	ERJ6GEYG682	M.REISITOR CH 1/10W 6.8K	1	
R5292,93	ERJ6GEYG122	M.RESISTOR CH 1/10W 1.2K	2	
R5302,03	ERJ6GEYG122	M.RESISTOR CH 1/10W 1.2K	2	
R5401,02	ERJ6GEYG470	M.RESISTOR CH 1/10W 47	2	
R5410,11	ERJ6GEYG222	M.RESISTOR CH 1/10W 2.2K	2	
R5413	ERJ6GEYG470	M.RESISTOR CH 1/10W 47	1	
R5414	ERJ6GEYG222	M.RESISTOR CH 1/10W 2.2K	1	
R5415	ERJ6GEYG273	M.RESISTOR CH 1/10W 27K	1	
R5416	ERJ6GEYG222	M.RESISTOR CH 1/10W 2.2K	1	
R5417	ERJ6GEYG122	M.RESISTOR CH 1/10W 1.2K	1	
R5418	ERJ6GEYG103	M.RESISTOR CH 1/10W 10K	1	
R5419	ERJ6GEYG682	M.REISITOR CH 1/10W 6.8K	1	
R5420	ERJ6GEYF473	M.RESISTOR CH 1/10W 47K	1	
R5421	ERJ6GEYG122	M.RESISTOR CH 1/10W 1.2K	1	
R5422	ERJ6GEYG102	M.RESISTOR CH 1/10W 1K	1	
R5425	ERJ6GEYG470	M.RESISTOR CH 1/10W 47	1	
R5426	ERJ6GEYF473	M.RESISTOR CH 1/10W 47K	1	
R5429	ERJ6GEYG470	M.RESISTOR CH 1/10W 47	1	
R5430	ERJ6GEYG222	M.RESISTOR CH 1/10W 2.2K	1	
R5431	ERJ6GEYG122	M.RESISTOR CH 1/10W 1.2K	1	
R5432	ERJ6GEYG470	M.RESISTOR CH 1/10W 47	1	
R5433	ERJ6GEYG103	M.RESISTOR CH 1/10W 10K	1	
R5434	ERJ6GEYG470	M.RESISTOR CH 1/10W 47	1	

Ref.No.	Part No.	Part Name & Description	Pcs	Remarks
R5435	ERJ6GEYG222	M.RESISTOR CH 1/10W 2.2K	1	
R5436	ERJ6GEYG103	M.RESISTOR CH 1/10W 10K	1	
R5437	ERJ6GEYG122	M.RESISTOR CH 1/10W 1.2K	1	
R5438,39	ERJ6GEYG103	M.RESISTOR CH 1/10W 10K	2	
R5440	ERJ6GEYG122	M.RESISTOR CH 1/10W 1.2K	1	
R5441	ERJ6GEYG470	M.RESISTOR CH 1/10W 47	1	
R5442	ERJ6GEYG103	M.RESISTOR CH 1/10W 10K	1	
R5445	ERJ6GEYG122	M.RESISTOR CH 1/10W 1.2K	1	
R5446	ERJ6GEYG470	M.RESISTOR CH 1/10W 47	1	
R5447	ERJ6GEYG222	M.RESISTOR CH 1/10W 2.2K	1	
R5449	ERJ6GEYG222	M.RESISTOR CH 1/10W 2.2K	1	
R5450	ERJ6GEYG122	M.RESISTOR CH 1/10W 1.2K	1	
R5451	ERJ6GEYG102	M.RESISTOR CH 1/10W 1K	1	
R5452	ERJ6GEYG821	M.RESISTOR CH 1/10W 820	1	
R5453	ERJ6GEYF472	M.RESISTOR CH 1/10W 4.7K	1	
R5454	ERJ6GEYG470	M.RESISTOR CH 1/10W 47	1	
R5455	ERJ6GEYG122	M.RESISTOR CH 1/10W 1.2K	1	
R5456	ERJ6GEYG331	M.RESISTOR CH 1/10W 330	1	
R5457	ERJ6GEYG122	M.RESISTOR CH 1/10W 1.2K	1	
R5458	ERJ6GEYG680	M.RESISTOR CH 1/10W 68	1	
R5459	ERJ6GEYG224	M.RESISTOR CH 1/10W 220K	1	
R5461	ERJ6GEYG821	M.RESISTOR CH 1/10W 820	1	
R5462	ERJ6GEYG102	M.RESISTOR CH 1/10W 1K	1	
R5463	ERJ6GEYF822	M.RESISTOR CH 1/10W 8.2K	1	
R5464	ERJ6GEYG122	M.RESISTOR CH 1/10W 1.2K	1	
R5465	ERJ6GEYG182	M.RESISTOR CH 1/10W 1.8K	1	
R5468	ERJ6GEYG332	M.RESISTOR CH 1/10W 3.3K	1	
R5469	ERJ6GEYG122	M.RESISTOR CH 1/10W 1.2K	1	
R5470	ERJ6GEYG153	M.RESISTOR CH 1/10W 15K	1	
R5471	ERJ6GEYG562	M.RESISTOR CH 1/10W 5.6K	1	
R5472	ERJ6GEYF822	M.RESISTOR CH 1/10W 8.2K	1	
R5474	ERJ6GEYG122	M.RESISTOR CH 1/10W 1.2K	1	
R5475	ERJ6GEYG392	M.RESISTOR CH 1/10W 3.9K	1	
R5476	ERJ6GEYG470	M.RESISTOR CH 1/10W 47	1	
R5478	ERJ6GEYG222	M.RESISTOR CH 1/10W 2.2K	1	
R5479	ERJ6GEYG122	M.RESISTOR CH 1/10W 1.2K	1	
R5480	ERJ6GEYG222	M.RESISTOR CH 1/10W 2.2K	1	
R5483	ERJ6GEYG222	M.RESISTOR CH 1/10W 2.2K	1	
R5488	ERJ6GEYG102	M.RESISTOR CH 1/10W 1K	1	
R5490,91	ERJ6GEYG470	M.RESISTOR CH 1/10W 47	2	
R5494	ERJ6GEYG470	M.RESISTOR CH 1/10W 47	1	
R5496	ERJ6GEYG470	M.RESISTOR CH 1/10W 47	1	
R5497	ERJ6GEYF822	M.RESISTOR CH 1/10W 8.2K	1	
R5498	ERJ6GEYG682	M.REISITOR CH 1/10W 6.8K	1	
R5499,00	ERJ6GEYG122	M.RESISTOR CH 1/10W 1.2K	2	
R5501	ERJ6RBD333	M.RESISTOR CH 1/10W 33K	1	
R5502	ERJ6RBD223	M.RESISTOR CH 1/10W 22K	1	
R5504,05	ERJ6GEYG122	M.RESISTOR CH 1/10W 1.2K	2	
R5508	ERJ6GEYG122	M.RESISTOR CH 1/10W 1.2K	1	
R5509	ERJ6GEYG103	M.RESISTOR CH 1/10W 10K	1	
R5510	ERJ6GEYG122	M.RESISTOR CH 1/10W 1.2K	1	
R5601	ERJ6GEYF472	M.RESISTOR CH 1/10W 4.7K	1	
R5602	ERJ6GEYG470	M.RESISTOR CH 1/10W 47	1	
R5603	ERJ6GEYG152	M.RESISTOR CH 1/10W 1.5K	1	
R5604,05	ERJ6GEYG470	M.RESISTOR CH 1/10W 47	2	
R5606	ERJ6GEYG222	M.RESISTOR CH 1/10W 2.2K	1	
R5607	ERJ6GEYG102	M.RESISTOR CH 1/10W 1K	1	
R5608,09	ERJ6GEYG151	M.RESISTOR CH 1/10W 150	2	
R5610	ERJ6GEYG102	M.RESISTOR CH 1/10W 1K	1	
R5612,13	ERJ6GEYG221	M.RESISTOR CH 1/10W 220	2	
R5614,15	ERJ6GEYG562	M.RESISTOR CH 1/10W 5.6K	2	
R5616	ERJ6GEYG271	M.RESISTOR CH 1/10W 270	1	
R5618	ERJ6GEYG470	M.RESISTOR CH 1/10W 47	1	
R5620	ERJ6GEYG470	M.RESISTOR CH 1/10W 47	1	
R5621	ERJ6GEYG392	M.RESISTOR CH 1/10W 3.9K	1	
R5622	ERJ6GEYG271	M.RESISTOR CH 1/10W 270	1	
R5623	ERJ6GEYG392	M.RESISTOR CH 1/10W 3.9K	1	
R5624	ERJ6GEYJ820	M.RESISTOR CH 1/10W 82	1	
R5627	ERJ6GEYJ820	M.RESISTOR CH 1/10W 82	1	
R5629	ERJ6GEYG680	M.RESISTOR CH 1/10W 68	1	
R5631	ERJ6GEYG152	M.RESISTOR CH 1/10W 1.5K	1	
R5632	ERJ6GEYG102	M.RESISTOR CH 1/10W 1K	1	
R5634	ERJ6GEYG470	M.RESISTOR CH 1/10W 47	1	
R5635	ERJ6GEYG102	M.RESISTOR CH 1/10W 1K	1	
R5639	ERJ6GEYG102	M.RESISTOR CH 1/10W 1K	1	

Ref.No.	Part No.	Part Name & Description	Pcs	Remarks
R5640	ERJ6GEYG471	M.RESISTOR CH 1/10W 470	1	
R5646	ERJ6GEYG182	M.RESISTOR CH 1/10W 1.8K	1	
R5647	ERJ6GEYG470	M.RESISTOR CH 1/10W 47	1	
R5650	ERJ6GEYG750	M.RESISTOR CH 1/10W 75	1	
R5654	ERJ6GEYG470	M.RESISTOR CH 1/10W 47	1	
R5656	ERJ6RBD102	M.RESISTOR CH 1/10W 1K	1	
R5659	ERJ6RBD102	M.RESISTOR CH 1/10W 1K	1	
R5663	ERJ6GEYG122	M.RESISTOR CH 1/10W 1.2K	1	
R5664	ERJ6GEYG470	M.RESISTOR CH 1/10W 47	1	
R5667	ERJ6GEYG470	M.RESISTOR CH 1/10W 47	1	
R5674	ERJ6GEYG470	M.RESISTOR CH 1/10W 47	1	
R5675,76	ERJ6GEYG122	M.RESISTOR CH 1/10W 1.2K	2	
R5701-03	ERJ6GEYG101	M.RESISTOR CH 1/10W 100	3	
R5704-06	ERJ6GEYG103	M.RESISTOR CH 1/10W 10K	3	
R5707	ERJ6GEYG222	M.RESISTOR CH 1/10W 2.2K	1	
R5708	ERJ6GEYG273	M.RESISTOR CH 1/10W 27K	1	
R5710	ERJ6GEYG102	M.RESISTOR CH 1/10W 1K	1	
R5711	ERJ6GEYG470	M.RESISTOR CH 1/10W 47	1	
R5712	ERJ6GEYF822	M.RESISTOR CH 1/10W 8.2K	1	
R5713,14	ERJ6GEYG102	M.RESISTOR CH 1/10W 1K	2	
R5717	ERJ6GEYG332	M.RESISTOR CH 1/10W 3.3K	1	
R5718	ERJ6GEYG122	M.RESISTOR CH 1/10W 1.2K	1	
R5724	ERJ6GEYG332	M.RESISTOR CH 1/10W 3.3K	1	
R5729	ERJ6GEYG122	M.RESISTOR CH 1/10W 1.2K	1	
R5730	ERJ6GEYG332	M.RESISTOR CH 1/10W 3.3K	1	
R5736	ERJ6GEYG122	M.RESISTOR CH 1/10W 1.2K	1	
R5737,38	ERJ6GEYG470	M.RESISTOR CH 1/10W 47	2	
R5801	ERJ6GEYG682	M.REISITOR CH 1/10W 6.8K	1	
R5802	ERJ6GEYG103	M.RESISTOR CH 1/10W 10K	1	
R5807,08	ERJ6GEYG122	M.RESISTOR CH 1/10W 1.2K	2	
R5809	ERDS2T0	C.RESISTOR 1/4W 0	1	
R5811-13	ERJ6GEYG470	M.RESISTOR CH 1/10W 47	3	
R5818-25	ERJ6GEYG391	M.RESISTOR CH 1/10W 390	8	
R5830-33	ERJ6GEYG122	M.RESISTOR CH 1/10W 1.2K	4	
R5835	ERJ6GEYG122	M.RESISTOR CH 1/10W 1.2K	1	
R5837-39	ERJ6GEYG122	M.RESISTOR CH 1/10W 1.2K	3	
R5840	ERJ6GEYG101	M.RESISTOR CH 1/10W 100	1	
R5845	ERJ6GEYF561	M.RESISTOR CH 1/10W 560	1	
R5864	ERJ6GEYG122	M.RESISTOR CH 1/10W 1.2K	1	
R5866,67	ERJ6GEYG122	M.RESISTOR CH 1/10W 1.2K	2	
R5901-03	ERJ6GEYG103	M.RESISTOR CH 1/10W 10K	3	
R5905	ERJ6GEYG103	M.RESISTOR CH 1/10W 10K	1	
R5906	ERJ6GEYG153	M.RESISTOR CH 1/10W 15K	1	
R5907,08	ERJ6GEYG103	M.RESISTOR CH 1/10W 10K	2	
R5909	ERJ6GEYG470	M.RESISTOR CH 1/10W 47	1	
R5910	ERJ6GEYG153	M.RESISTOR CH 1/10W 15K	1	
R5911	ERJ6GEYG471	M.RESISTOR CH 1/10W 470	1	
R5912	ERJ6GEYF472	M.RESISTOR CH 1/10W 4.7K	1	
R5914-16	ERJ6GEYG470	M.RESISTOR CH 1/10W 47	3	
R5917,18	ERJ6GEYG122	M.RESISTOR CH 1/10W 1.2K	2	
R5921	ERDS2TJ470	C.RESISTOR 1/4W 47	1	
SW5801	VSS0367-04B	SWITCH	1	
TG5101	VJR0646	TEST POINT	1	
TG5201	VJR0646	TEST POINT	1	
TG5401	VJR0646	TEST POINT	1	
TG5801	VJR0646	TEST POINT	1	
TP5001,02	VJR0646	TEST POINT	2	
TP5101,02	VJR0646	TEST POINT	2	
TP5201-04	VJR0646	TEST POINT	4	
TP5401-05	VJR0646	TEST POINT	5	
TP5601,02	VJR0646	TEST POINT	2	
TP5801,02	EYF6CU	TEST POINT	2	
TP5901	VJR0646	TEST POINT	1	
VR5210	VRV0109B203	V.RESISTOR 20K	1	
VR5410	VRV0109B203	V.RESISTOR 20K	1	
VR5601	VRV0109B102	V.RESISTOR 1K	1	
VR5801	VRV0113B501	V.RESISTOR 500	1	
		MISCELLANEOUS		
	VML2143	CARD PULLER	1	

Ref.No.	Part No.	Part Name & Description	Pcs	Remarks
	VML2144	CARD PULLER	1	
■E11	VEP85049A	H4 RF AMP P.C.BOARD	1	(RTL)
C5003-12	ECEV1CV470Q	E.CAPACITOR CH 16V 47U	10	
C5013	ECEV0JV101Q	E.CAPACITOR CH6.3V 100U	1	
C5014	ECEV1CV470Q	E.CAPACITOR CH 16V 47U	1	
C5020,21	ECEV1HV2R2Q	E.CAPACITOR CH 50V 2.2U	2	
C5022,23	ECEV1CV470Q	E.CAPACITOR CH 16V 47U	2	
C5024,25	ECEV1HV2R2Q	E.CAPACITOR CH 50V 2.2U	2	
C5026,27	ECEV1CV470Q	E.CAPACITOR CH 16V 47U	2	
C5052-54	ECUM1H221JCN	C.CAPACITOR CH 50V 220P	3	
C5057-64	ECUM1E104ZFN	C.CAPACITOR CH 25V 0.1U	8	
C5066,67	ECUM1E104ZFN	C.CAPACITOR CH 25V 0.1U	2	
C5069-94	ECUM1E104ZFN	C.CAPACITOR CH 25V 0.1U	26	
C5099,00	ECUM1E104ZFN	C.CAPACITOR CH 25V 0.1U	2	
C5105-08	ECUM1E104ZFN	C.CAPACITOR CH 25V 0.1U	4	
C5110,11	ECUM1E104ZFN	C.CAPACITOR CH 25V 0.1U	2	
C5116-33	ECUM1E104ZFN	C.CAPACITOR CH 25V 0.1U	18	
C5136	ECUM1E104ZFN	C.CAPACITOR CH 25V 0.1U	1	
C5140,41	ECUM1E104ZFN	C.CAPACITOR CH 25V 0.1U	2	
C5202,03	ECUM1E104ZFN	C.CAPACITOR CH 25V 0.1U	2	
C5206,07	ECUM1E104ZFN	C.CAPACITOR CH 25V 0.1U	2	
C5209,10	ECUM1E104ZFN	C.CAPACITOR CH 25V 0.1U	2	
C5600-07	ECUM1E104ZFN	C.CAPACITOR CH 25V 0.1U	8	
C5608	ECUM1H470JCN	C.CAPACITOR CH 50V 47P	1	
C5609-11	ECUM1E104ZFN	C.CAPACITOR CH 25V 0.1U	3	
C5612	ECUM1H330JCN	C.CAPACITOR CH 50V 33P	1	
C5613	ECUM1E104ZFN	C.CAPACITOR CH 25V 0.1U	1	
C5614	ECUX1H473KBN	C.CAPACITOR CH 50V 0.047U	1	
C5615	ECUM1H103KBN	C.CAPACITOR CH 50V 0.01U	1	
C5617	ECUX1H473KBN	C.CAPACITOR CH 50V 0.047U	1	
C5618,19	ECUM1H103KBN	C.CAPACITOR CH 50V 0.01U	2	
C5620,21	ECUM1E104ZFN	C.CAPACITOR CH 25V 0.1U	2	
C5622	ECUM1H270JCN	C.CAPACITOR CH 50V 27P	1	
C5624	ECUM1H560JCN	C.CAPACITOR CH 50V 56P	1	
C5626	ECUM1H101JCN	C.CAPACITOR CH 50V 100P	1	
C5628	ECUM1H121JCN	C.CAPACITOR CH 50V 120P	1	
C5630,31	ECUM1E104ZFN	C.CAPACITOR CH 25V 0.1U	2	
C5632	ECUM1H470JCN	C.CAPACITOR CH 50V 47P	1	
C5633-36	ECUM1E104ZFN	C.CAPACITOR CH 25V 0.1U	4	
C5637,38	ECUM1H102KBN	C.CAPACITOR CH 50V 1000P	2	
C5639,40	ECUM1E104ZFN	C.CAPACITOR CH 25V 0.1U	2	
C5643-45	ECUM1E104ZFN	C.CAPACITOR CH 25V 0.1U	3	
C5646,47	ECUM1H103KBN	C.CAPACITOR CH 50V 0.01U	2	
C5648-58	ECUM1E104ZFN	C.CAPACITOR CH 25V 0.1U	11	
C5659	ECUM1H102KBN	C.CAPACITOR CH 50V 1000P	1	
C5660	ECUM1H182KBN	C.CAPACITOR CH 50V 1800P	1	
C5661-63	ECUM1E104ZFN	C.CAPACITOR CH 25V 0.1U	3	
C5665	ECUM1E104ZFN	C.CAPACITOR CH 25V 0.1U	1	
C5670	ECUM1E104ZFN	C.CAPACITOR CH 25V 0.1U	1	
C5671	ECUM1H330JCN	C.CAPACITOR CH 50V 33P	1	
C5700-07	ECUM1E104ZFN	C.CAPACITOR CH 25V 0.1U	8	
C5708	ECUM1H470JCN	C.CAPACITOR CH 50V 47P	1	
C5709-11	ECUM1E104ZFN	C.CAPACITOR CH 25V 0.1U	3	
C5713	ECUM1E104ZFN	C.CAPACITOR CH 25V 0.1U	1	
C5714	ECUX1H473KBN	C.CAPACITOR CH 50V 0.047U	1	
C5715	ECUM1H103KBN	C.CAPACITOR CH 50V 0.01U	1	
C5717	ECUX1H473KBN	C.CAPACITOR CH 50V 0.047U	1	
C5718,19	ECUM1H103KBN	C.CAPACITOR CH 50V 0.01U	2	
C5720,21	ECUM1E104ZFN	C.CAPACITOR CH 25V 0.1U	2	
C5722	ECUM1H270JCN	C.CAPACITOR CH 50V 27P	1	
C5724	ECUM1H560JCN	C.CAPACITOR CH 50V 56P	1	
C5726	ECUM1H101JCN	C.CAPACITOR CH 50V 100P	1	
C5728	ECUM1H121JCN	C.CAPACITOR CH 50V 120P	1	
C5730,31	ECUM1E104ZFN	C.CAPACITOR CH 25V 0.1U	2	
C5732	ECUM1H470JCN	C.CAPACITOR CH 50V 47P	1	
C5733-36	ECUM1E104ZFN	C.CAPACITOR CH 25V 0.1U	4	
C5737,38	ECUM1H102KBN	C.CAPACITOR CH 50V 1000P	2	
C5739,40	ECUM1E104ZFN	C.CAPACITOR CH 25V 0.1U	2	
C5743-45	ECUM1E104ZFN	C.CAPACITOR CH 25V 0.1U	3	
C5746,47	ECUM1H103KBN	C.CAPACITOR CH 50V 0.01U	2	
C5748-58	ECUM1E104ZFN	C.CAPACITOR CH 25V 0.1U	11	

Ref.No.	Part No.	Part Name & Description	Pcs	Remarks
C5759	ECUM1H102KBN	C.CAPACITOR CH 50V 1000P	1	
C5760	ECUM1H182KBN	C.CAPACITOR CH 50V 1800P	1	
D5001	MA153	DIODE	1	
D5002	MA152WK	DIODE	1	
FL5002-05	VLF0931	FILTER	4	
IC5002	MC74HC32AF	IC	1	
IC5003	MC74HC04AF	IC	1	
IC5004	NJM082BM	IC	1	
IC5005	MC74HC86AF	IC	1	
IC5006,07	TC4S66F	IC	2	
IC5008	NJM082BM	IC	1	
IC5009	MC14053BF	IC	1	
IC5010	AN7805F	IC	1	
IC5011	AN7905F	IC	1	
IC5013	MB88344PFV	IC	1	
IC5014-16	NJM082BM	IC	3	
IC5017	MC14053BF	IC	1	
IC5020	MC10H116L	IC	1	
IC5021	MC10H102L	IC	1	
IC5022	MC10131L	IC	1	
IC5051	UPC1663G	IC	1	
IC5052	NJM1496M	IC	1	
IC5053	NJM082BM	IC	1	
IC5054	UPC1663G	IC	1	
IC5055	NJM1496M	IC	1	
L5600	VLQ0188K1R0N	COIL 1UH	1	
L5601,02	VLQ0188KR47N	COIL 0.47UH	2	
L5603,04	VLQ0188J101	COIL 100UH	2	
L5605,06	VLQ0163KR39	COIL 0.39UH	2	
L5700-02	VLQ0188K1R0N	COIL 1UH	3	
L5703,04	VLQ0188J101	COIL 100UH	2	
L5705,06	VLQ0188KR39N	COIL 0.39UH	2	
P5001	VJP3454B096	CONNECTOR (MALE)	1	
P5002	VJP1230T	CONNECTOR (MALE) 3P	1	
P5003	VJP1230G	CONNECTOR (MALE) 3P	1	
P5004	VJP1230T	CONNECTOR (MALE) 3P	1	
P5005	VJP1230G	CONNECTOR (MALE) 3P	1	
Q5001	2SD601A-R	TRANSISTOR	1	
Q5002	2SB709A-R	TRANSISTOR	1	
Q5006,07	2SA1022-C	TRANSISTOR	2	
Q5008	2SD601A-R	TRANSISTOR	1	
Q5600	XN6537	TRANSISTOR-RESISTOR	1	
Q5601,02	2SC2295-C	TRANSISTOR	2	
Q5603	XN5531	TRANSISTOR-RESISTOR	1	
Q5604	2SC3130	TRANSISTOR	1	
Q5605	XN5531	TRANSISTOR-RESISTOR	1	
Q5606,07	2SK508K512	TRANSISTOR	2	
Q5608	2SC3130	TRANSISTOR	1	
Q5609,10	2SD1979	TRANSISTOR	2	
Q5611-13	2SC3130	TRANSISTOR	3	
Q5614,15	2SK508K512	TRANSISTOR	2	
Q5616-19	XN5531	TRANSISTOR-RESISTOR	4	
Q5620,21	2SC3130	TRANSISTOR	2	
Q5700	XN6537	TRANSISTOR-RESISTOR	1	
Q5701,02	2SC2295-C	TRANSISTOR	2	
Q5703	XN5531	TRANSISTOR-RESISTOR	1	
Q5704	2SC3130	TRANSISTOR	1	
Q5705	XN5531	TRANSISTOR-RESISTOR	1	
Q5706,07	2SK508K512	TRANSISTOR	2	
Q5708	2SC3130	TRANSISTOR	1	
Q5709,10	2SD1979	TRANSISTOR	2	
Q5711-13	2SC3130	TRANSISTOR	3	
Q5714,15	2SK508K512	TRANSISTOR	2	
Q5716-19	XN5531	TRANSISTOR-RESISTOR	4	
Q5720	2SC3130	TRANSISTOR	1	
R5001	ERJ6GEYG103	M.RESISTOR CH 1/10W 10K	1	
R5003	ERJ6GEYG103	M.RESISTOR CH 1/10W 10K	1	
R5010,11	ERJ6GEYG470	M.RESISTOR CH 1/10W 47	2	

Ref.No.	Part No.	Part Name & Description	Pcs	Remarks
R5012,13	ERJ6GEYG103	M.RESISTOR CH 1/10W 10K	2	
R5015	ERJ6GEYG103	M.RESISTOR CH 1/10W 10K	1	
R5018,19	ERJ6GEYG103	M.RESISTOR CH 1/10W 10K	2	
R5020	ERJ6GEYG104	M.RESISTOR CH 1/10W 100K	1	
R5021	ERJ6GEYG683	M.RESISTOR CH 1/10W 68K	1	
R5022-26	ERJ6GEYG103	M.RESISTOR CH 1/10W 10K	5	
R5040	ERJ6GEYG392	M.RESISTOR CH 1/10W 3.9K	1	
R5041,42	ERJ6GEYG103	M.RESISTOR CH 1/10W 10K	2	
R5043	ERJ6GEYG562	M.RESISTOR CH 1/10W 5.6K	1	
R5044	ERJ6GEYG392	M.RESISTOR CH 1/10W 3.9K	1	
R5046-48	ERJ6GEYG101	M.RESISTOR CH 1/10W 100	3	
R5049,50	ERJ6GEYG103	M.RESISTOR CH 1/10W 10K	2	
R5051	ERJ6GEYG392	M.RESISTOR CH 1/10W 3.9K	1	
R5052-54	ERJ6GEYG103	M.RESISTOR CH 1/10W 10K	3	
R5055	ERJ6GEYG562	M.RESISTOR CH 1/10W 5.6K	1	
R5056	ERJ6GEYG392	M.RESISTOR CH 1/10W 3.9K	1	
R5057	ERJ6GEYG103	M.RESISTOR CH 1/10W 10K	1	
R5058	ERJ6GEYG392	M.RESISTOR CH 1/10W 3.9K	1	
R5059,60	ERJ6GEYG103	M.RESISTOR CH 1/10W 10K	2	
R5061	ERJ6GEYG562	M.RESISTOR CH 1/10W 5.6K	1	
R5062	ERJ6GEYG392	M.RESISTOR CH 1/10W 3.9K	1	
R5063-65	ERJ6GEYG103	M.RESISTOR CH 1/10W 10K	3	
R5069-80	ERJ6GEYG101	M.RESISTOR CH 1/10W 100	12	
R5081	ERJ6RBD472	M.RESISTOR CH 1/10W 4.7K	1	
R5082	ERJ6RBD122	M.RESISTOR CH 1/10W 1.2K	1	
R5083,84	ERJ6RBD153	M.RESISTOR CH 1/10W 15K	2	
R5085	ERJ6GEYG103	M.RESISTOR CH 1/10W 10K	1	
R5086	ERJ6RBD472	M.RESISTOR CH 1/10W 4.7K	1	
R5087	ERJ6RBD122	M.RESISTOR CH 1/10W 1.2K	1	
R5088,89	ERJ6RBD153	M.RESISTOR CH 1/10W 15K	2	
R5090	ERJ6GEYG103	M.RESISTOR CH 1/10W 10K	1	
R5091	ERJ6RBD223	M.RESISTOR CH 1/10W 22K	1	
R5092,93	ERJ6RBD103	M.RESISTOR CH 1/10W 10K	2	
R5094	ERJ6RBD333	M.RESISTOR CH 1/10W 33K	1	
R5095	ERJ6RBD153	M.RESISTOR CH 1/10W 15K	1	
R5096	ERJ6RBD223	M.RESISTOR CH 1/10W 22K	1	
R5097,98	ERJ6RBD103	M.RESISTOR CH 1/10W 10K	2	
R5099	ERJ6RBD333	M.RESISTOR CH 1/10W 33K	1	
R5100	ERJ6RBD153	M.RESISTOR CH 1/10W 15K	1	
R5111	ERJ6RBD223	M.RESISTOR CH 1/10W 22K	1	
R5112	ERJ6RBD472	M.RESISTOR CH 1/10W 4.7K	1	
R5113	ERJ6RBD272	M.RESISTOR CH 1/10W 2.7K	1	
R5114,15	ERJ6RBD103	M.RESISTOR CH 1/10W 10K	2	
R5116	ERJ6RBD223	M.RESISTOR CH 1/10W 22K	1	
R5117	ERJ6RBD472	M.RESISTOR CH 1/10W 4.7K	1	
R5118	ERJ6RBD272	M.RESISTOR CH 1/10W 2.7K	1	
R5119,20	ERJ6RBD103	M.RESISTOR CH 1/10W 10K	2	
R5122	ERJ6GEYG122	M.RESISTOR CH 1/10W 1.2K	1	
R5130-33	ERJ6GEYG101	M.RESISTOR CH 1/10W 100	4	
R5140-45	ERJ6GEYG101	M.RESISTOR CH 1/10W 100	6	
R5146	ERJ6RBD223	M.RESISTOR CH 1/10W 22K	1	
R5148	ERJ6RBD562	M.RESISTOR CH 1/10W 5.6K	1	
R5149	ERJ6RBD333	M.RESISTOR CH 1/10W 33K	1	
R5150	ERJ6RBD103	M.RESISTOR CH 1/10W 10K	1	
R5151	ERJ6RBD223	M.RESISTOR CH 1/10W 22K	1	
R5153	ERJ6RBD562	M.RESISTOR CH 1/10W 5.6K	1	
R5154	ERJ6RBD333	M.RESISTOR CH 1/10W 33K	1	
R5155	ERJ6RBD103	M.RESISTOR CH 1/10W 10K	1	
R5156	ERJ6GEYG103	M.RESISTOR CH 1/10W 10K	1	
R5161	ERJ6GEYG103	M.RESISTOR CH 1/10W 10K	1	
R5171,72	ERJ6GEYG101	M.RESISTOR CH 1/10W 100	2	
R5200,01	ERJ6GEYG101	M.RESISTOR CH 1/10W 100	2	
R5202-05	ERJ6GEYG471	M.RESISTOR CH 1/10W 470	4	
R5206,07	ERJ6GEYG101	M.RESISTOR CH 1/10W 100	2	
R5208-10	ERJ6GEYG471	M.RESISTOR CH 1/10W 470	3	
R5211,12	ERJ6GEYG101	M.RESISTOR CH 1/10W 100	2	
R5214,15	ERJ6GEYG332	M.RESISTOR CH 1/10W 3.3K	2	
R5216,17	ERJ6GEYG121	M.RESISTOR CH 1/10W 120	2	
R5218,19	ERJ6GEYJ820	M.RESISTOR CH 1/10W 82	2	
R5230	ERJ6GEYG153	M.RESISTOR CH 1/10W 15K	1	
R5231,32	ERJ6GEYG470	M.RESISTOR CH 1/10W 47	2	
R5600,01	ERJ6RED470	M.RESISTOR CH 1/10W 47	2	
R5602	ERJ6RED560	M.RESISTOR CH 1/10W 56	1	
R5603,04	ERJ6RBD271	M.RESISTOR CH 1/10W 270	2	
R5605	ERJ6RED680	M.RESISTOR CH 1/10W 68	1	

Ref.No.	Part No.	Part Name & Description	Pcs	Remarks
R5606	ERJ6RBD222	M.RESISTOR CH 1/10W 2.2K	1	
R5607,08	ERJ6RBD391	M.RESISTOR CH 1/10W 390	2	
R5609	ERJ6RBD222	M.RESISTOR CH 1/10W 2.2K	1	
R5610,11	ERJ6GEYG470	M.RESISTOR CH 1/10W 47	2	
R5612	ERJ6GEYG330	M.RESISTOR CH 1/10W 33	1	
R5613	ERJ6GEYG272	M.RESISTOR CH 1/10W 2.7K	1	
R5614	ERJ6GEYF472	M.RESISTOR CH 1/10W 4.7K	1	
R5615	ERJ6GEYG470	M.RESISTOR CH 1/10W 47	1	
R5616,17	ERJ6GEYG330	M.RESISTOR CH 1/10W 33	2	
R5618,19	ERJ6GEYG332	M.RESISTOR CH 1/10W 3.3K	2	
R5620,21	ERJ6GEYG470	M.RESISTOR CH 1/10W 47	2	
R5622,23	ERJ6GEYG330	M.RESISTOR CH 1/10W 33	2	
R5624,25	ERJ6GEYG152	M.RESISTOR CH 1/10W 1.5K	2	
R5626	ERJ6RBD181	M.RESISTOR CH 1/10W 180	1	
R5627	ERJ6RBD103	M.RESISTOR CH 1/10W 10K	1	
R5628	ERJ6RBD391	M.RESISTOR CH 1/10W 390	1	
R5629	ERJ6RBD181	M.RESISTOR CH 1/10W 180	1	
R5630	ERJ6RBD103	M.RESISTOR CH 1/10W 10K	1	
R5631	ERJ6GEYG221	M.RESISTOR CH 1/10W 220	1	
R5632	ERJ6GEYG222	M.RESISTOR CH 1/10W 2.2K	1	
R5633	ERJ6GEYG470	M.RESISTOR CH 1/10W 47	1	
R5634	ERJ6GEYG330	M.RESISTOR CH 1/10W 33	1	
R5635	ERJ6GEYG272	M.RESISTOR CH 1/10W 2.7K	1	
R5637,38	ERJ6GEYG470	M.RESISTOR CH 1/10W 47	2	
R5639,40	ERJ6GEYG122	M.RESISTOR CH 1/10W 1.2K	2	
R5642,43	ERJ6GEYG103	M.RESISTOR CH 1/10W 10K	2	
R5644	ERJ6GEYG330	M.RESISTOR CH 1/10W 33	1	
R5645	ERJ6GEYG102	M.RESISTOR CH 1/10W 1K	1	
R5646,47	ERJ6GEYG470	M.RESISTOR CH 1/10W 47	2	
R5648	ERJ6GEYG330	M.RESISTOR CH 1/10W 33	1	
R5649	ERJ6GEYG102	M.RESISTOR CH 1/10W 1K	1	
R5650,51	ERJ6GEYG470	M.RESISTOR CH 1/10W 47	2	
R5652	ERJ6GEYG330	M.RESISTOR CH 1/10W 33	1	
R5653	ERJ6GEYG182	M.RESISTOR CH 1/10W 1.8K	1	
R5654,55	ERJ6GEYG470	M.RESISTOR CH 1/10W 47	2	
R5656,57	ERJ6GEYG331	M.RESISTOR CH 1/10W 330	2	
R5658,59	ERJ6GEYG102	M.RESISTOR CH 1/10W 1K	2	
R5660	ERJ6GEYG152	M.RESISTOR CH 1/10W 1.5K	1	
R5661	ERJ6RBD332	M.RESISTOR CH 1/10W 3.3K	1	
R5662	ERJ6RBD221	M.RESISTOR CH 1/10W 220	1	
R5663	ERJ6RBD332	M.RESISTOR CH 1/10W 3.3K	1	
R5664-66	ERJ6GEYG152	M.RESISTOR CH 1/10W 1.5K	3	
R5667,68	ERJ6GEYG470	M.RESISTOR CH 1/10W 47	2	
R5669,70	ERJ6GEYG330	M.RESISTOR CH 1/10W 33	2	
R5671,72	ERJ6GEYG222	M.RESISTOR CH 1/10W 2.2K	2	
R5673,74	ERJ6GEYG470	M.RESISTOR CH 1/10W 47	2	
R5675,76	ERJ6GEYG330	M.RESISTOR CH 1/10W 33	2	
R5677,78	ERJ6RBD391	M.RESISTOR CH 1/10W 390	2	
R5679,80	ERJ6RBD222	M.RESISTOR CH 1/10W 2.2K	2	
R5681,82	ERJ6RED470	M.RESISTOR CH 1/10W 47	2	
R5683,84	ERJ6GEYG470	M.RESISTOR CH 1/10W 47	2	
R5685,86	ERJ6GEYG330	M.RESISTOR CH 1/10W 33	2	
R5687,88	ERJ6GEYF472	M.RESISTOR CH 1/10W 4.7K	2	
R5689	ERJ6GEYG330	M.RESISTOR CH 1/10W 33	1	
R5690	ERJ6GEYG182	M.RESISTOR CH 1/10W 1.8K	1	
R5691	ERJ6GEYG470	M.RESISTOR CH 1/10W 47	1	
R5692	ERJ6GEYF472	M.RESISTOR CH 1/10W 4.7K	1	
R5693-96	ERJ6GEYG102	M.RESISTOR CH 1/10W 1K	4	
R5697	ERJ6RBD821	M.RESISTOR CH 1/10W 820	1	
R5698	ERJ6RBD102	M.RESISTOR CH 1/10W 1K	1	
R5699-02	ERJ6GEYG560	M.RESISTOR CH 1/10W 56	4	
R5703	ERJ6RBD822	M.RESISTOR CH 1/10W 8.2K	1	
R5704	ERJ6RBD391	M.RESISTOR CH 1/10W 390	1	
R5705	ERJ6RBD332	M.RESISTOR CH 1/10W 3.3K	1	
R5706,07	ERJ6RBD392	M.RESISTOR CH 1/10W 3.9K	2	
R5708	ERJ6RBD153	M.RESISTOR CH 1/10W 15K	1	
R5709	ERJ6GEYG103	M.RESISTOR CH 1/10W 10K	1	
R5710	ERJ6GEYG470	M.RESISTOR CH 1/10W 47	1	
R5711-15	ERJ6GEYG122	M.RESISTOR CH 1/10W 1.2K	5	
R5717	ERJ6GEYF472	M.RESISTOR CH 1/10W 4.7K	1	
R5718	ERJ6GEYG330	M.RESISTOR CH 1/10W 33	1	
R5719	ERJ6GEYG102	M.RESISTOR CH 1/10W 1K	1	
R5720	ERJ6GEYG470	M.RESISTOR CH 1/10W 47	1	
R5800,01	ERJ6RED470	M.RESISTOR CH 1/10W 47	2	
R5802	ERJ6RED560	M.RESISTOR CH 1/10W 56	1	

Ref.No.	Part No.	Part Name & Description	Pcs	Remarks
R5803,04	ERJ6RBD271	M.RESISTOR CH 1/10W 270	2	
R5805	ERJ6RBD121	M.RESISTOR CH 1/10W 120	1	
R5806	ERJ6RBD222	M.RESISTOR CH 1/10W 2.2K	1	
R5807,08	ERJ6RBD391	M.RESISTOR CH 1/10W 390	2	
R5809	ERJ6RBD222	M.RESISTOR CH 1/10W 2.2K	1	
R5810,11	ERJ6GEYG470	M.RESISTOR CH 1/10W 47	2	
R5812	ERJ6GEYG330	M.RESISTOR CH 1/10W 33	1	
R5813	ERJ6GEYG272	M.RESISTOR CH 1/10W 2.7K	1	
R5814	ERJ6GEYF472	M.RESISTOR CH 1/10W 4.7K	1	
R5815	ERJ6GEYG470	M.RESISTOR CH 1/10W 47	1	
R5816,17	ERJ6GEYG330	M.RESISTOR CH 1/10W 33	2	
R5818,19	ERJ6GEYG332	M.RESISTOR CH 1/10W 3.3K	2	
R5820,21	ERJ6GEYG470	M.RESISTOR CH 1/10W 47	2	
R5822,23	ERJ6GEYG330	M.RESISTOR CH 1/10W 33	2	
R5824,25	ERJ6GEYG152	M.RESISTOR CH 1/10W 1.5K	2	
R5826	ERJ6RBD181	M.RESISTOR CH 1/10W 180	1	
R5827	ERJ6RBD103	M.RESISTOR CH 1/10W 10K	1	
R5828	ERJ6RBD391	M.RESISTOR CH 1/10W 390	1	
R5829	ERJ6RBD181	M.RESISTOR CH 1/10W 180	1	
R5830	ERJ6RBD103	M.RESISTOR CH 1/10W 10K	1	
R5831	ERJ6GEYG221	M.RESISTOR CH 1/10W 220	1	
R5832	ERJ6GEYG222	M.RESISTOR CH 1/10W 2.2K	1	
R5833	ERJ6GEYG470	M.RESISTOR CH 1/10W 47	1	
R5834	ERJ6GEYG330	M.RESISTOR CH 1/10W 33	1	
R5835	ERJ6GEYG272	M.RESISTOR CH 1/10W 2.7K	1	
R5836	ERJ6RBD101	M.RESISTOR CH 1/10W 100	1	
R5837	ERJ6GEYG470	M.RESISTOR CH 1/10W 47	1	
R5838	ERJ6GEYG122	M.RESISTOR CH 1/10W 1.2K	1	
R5839,40	ERJ6RBD151	M.RESISTOR CH 1/10W 150	2	
R5842,43	ERJ6GEYG103	M.RESISTOR CH 1/10W 10K	2	
R5844	ERJ6GEYG330	M.RESISTOR CH 1/10W 33	1	
R5845	ERJ6GEYG102	M.RESISTOR CH 1/10W 1K	1	
R5846,47	ERJ6GEYG470	M.RESISTOR CH 1/10W 47	2	
R5848	ERJ6GEYG330	M.RESISTOR CH 1/10W 33	1	
R5849	ERJ6GEYG102	M.RESISTOR CH 1/10W 1K	1	
R5850,51	ERJ6GEYG470	M.RESISTOR CH 1/10W 47	2	
R5852	ERJ6GEYG330	M.RESISTOR CH 1/10W 33	1	
R5853	ERJ6GEYG182	M.RESISTOR CH 1/10W 1.8K	1	
R5854,55	ERJ6GEYG470	M.RESISTOR CH 1/10W 47	2	
R5856,57	ERJ6GEYG331	M.RESISTOR CH 1/10W 330	2	
R5858,59	ERJ6GEYG102	M.RESISTOR CH 1/10W 1K	2	
R5860	ERJ6GEYG152	M.RESISTOR CH 1/10W 1.5K	1	
R5861	ERJ6RBD332	M.RESISTOR CH 1/10W 3.3K	1	
R5862	ERJ6RBD221	M.RESISTOR CH 1/10W 220	1	
R5863	ERJ6RBD332	M.RESISTOR CH 1/10W 3.3K	1	
R5864-66	ERJ6GEYG152	M.RESISTOR CH 1/10W 1.5K	3	
R5867,68	ERJ6GEYG470	M.RESISTOR CH 1/10W 47	2	
R5869,70	ERJ6GEYG330	M.RESISTOR CH 1/10W 33	2	
R5871,72	ERJ6GEYG222	M.RESISTOR CH 1/10W 2.2K	2	
R5873,74	ERJ6GEYG470	M.RESISTOR CH 1/10W 47	2	
R5875,76	ERJ6GEYG330	M.RESISTOR CH 1/10W 33	2	
R5877,78	ERJ6RBD391	M.RESISTOR CH 1/10W 390	2	
R5879,80	ERJ6RBD222	M.RESISTOR CH 1/10W 2.2K	2	
R5881,82	ERJ6RED470	M.RESISTOR CH 1/10W 47	2	
R5883,84	ERJ6GEYG470	M.RESISTOR CH 1/10W 47	2	
R5885,86	ERJ6GEYG330	M.RESISTOR CH 1/10W 33	2	
R5887,88	ERJ6GEYF472	M.RESISTOR CH 1/10W 4.7K	2	
R5889	ERJ6GEYG330	M.RESISTOR CH 1/10W 33	1	
R5890	ERJ6GEYG182	M.RESISTOR CH 1/10W 1.8K	1	
R5891	ERJ6GEYG470	M.RESISTOR CH 1/10W 47	1	
R5892	ERJ6GEYF472	M.RESISTOR CH 1/10W 4.7K	1	
R5893-96	ERJ6GEYG102	M.RESISTOR CH 1/10W 1K	4	
R5897	ERJ6RBD821	M.RESISTOR CH 1/10W 820	1	
R5898	ERJ6RBD102	M.RESISTOR CH 1/10W 1K	1	
R5899-02	ERJ6GEYG560	M.RESISTOR CH 1/10W 56	4	
R5903	ERJ6RBD822	M.RESISTOR CH 1/10W 8.2K	1	
R5904	ERJ6RBD391	M.RESISTOR CH 1/10W 390	1	
R5905	ERJ6RBD332	M.RESISTOR CH 1/10W 3.3K	1	
R5906,07	ERJ6RBD392	M.RESISTOR CH 1/10W 3.9K	2	
R5908	ERJ6RBD153	M.RESISTOR CH 1/10W 15K	1	
R5909	ERJ6GEYG103	M.RESISTOR CH 1/10W 10K	1	
R5910	ERJ6GEYG470	M.RESISTOR CH 1/10W 47	1	
R5911-14	ERJ6GEYG122	M.RESISTOR CH 1/10W 1.2K	4	
R5920	ERJ6GEYG470	M.RESISTOR CH 1/10W 47	1	

Ref.No.	Part No.	Part Name & Description	Pcs	Remarks
RY5001	VSY2069	RELAY	1	
SS5008	VJS1990	CONNECTOR (FEMALE)	1	
SW5008	VJP2536A003	CONNECTOR (MALE)	1	
TG5001-03	VJR0646	TEST POINT	3	
TG5005-09	VJR0646	TEST POINT	5	
TP5001-03	VJR0646	TEST POINT	3	
TP5007-12	VJR0646	TEST POINT	6	
TP5015-20	VJR0646	TEST POINT	6	
VC5600,01	ECV1ZW20X53T	TRIMMER	2	
VC5700,01	ECV1ZW20X53T	TRIMMER	2	
VR5013,14	VRV0112B502	V.RESISTOR 5K	2	
		MISCELLANEOUS		
	VML2143	CARD PULLER	1	
	VML2144	CARD PULLER	1	
	VSC3626	HEAT SINK (A)	2	
	XNG26EFXS	NUT	2	
	XYN26+F10	SCREW	2	
■E12	VEP85151A	HEAD BUFFER P.C.BOARD	1	(RTL)
C5001	ECEV1CV470Q	E.CAPACITOR CH 16V 47U	1	
C5002	ECEV1CV100Q	E.CAPACITOR CH 16V 10U	1	
C5003	ECEV1CV470Q	E.CAPACITOR CH 16V 47U	1	
C5004	ECEV1CV100Q	E.CAPACITOR CH 16V 10U	1	
C5005	ECEV1CV470Q	E.CAPACITOR CH 16V 47U	1	
C5006	ECEV1CV100Q	E.CAPACITOR CH 16V 10U	1	
C5007	ECEV1CV470Q	E.CAPACITOR CH 16V 47U	1	
C5008	ECEV1CV100Q	E.CAPACITOR CH 16V 10U	1	
C5009	ECEV1CV470Q	E.CAPACITOR CH 16V 47U	1	
C5010	ECEV1CV100Q	E.CAPACITOR CH 16V 10U	1	
C5011-14	ECEV1EN4R7Q	E.CAPACITOR CH 25V 4.7U	4	
C5015,16	ECEV1CV100Q	E.CAPACITOR CH 16V 10U	2	
C5017-20	ECEV1HV2R2Q	E.CAPACITOR CH 50V 2.2U	4	
C5021,22	ECEV1CV100Q	E.CAPACITOR CH 16V 10U	2	
C5050-60	ECUX1E104ZFV	C.CAPACITOR CH 25V 0.1U	11	
C5061,62	ECUX1H221JCV	C.CAPACITOR CH 50V 220P	2	
C5063-66	ECUX1H822KBV	C.CAPACITOR CH 50V 8200P	4	
C5100-03	ECUX1E104ZFV	C.CAPACITOR CH 25V 0.1U	4	
C5200-03	ECUX1E104ZFV	C.CAPACITOR CH 25V 0.1U	4	
C5300-02	ECUX1E104ZFV	C.CAPACITOR CH 25V 0.1U	3	
C5303	ECUX1H220JCV	C.CAPACITOR CH 50V 22P	1	
C5304	ECUX1H181JCV	C.CAPACITOR CH 50V 180P	1	
C5305	ECUX1H030CCV	C.CAPACITOR CH 50V 3P	1	
C5306	ECUX1H180JCV	C.CAPACITOR CH 50V 18P	1	
C5307,08	ECUX1H080DCV	C.CAPACITOR CH 50V 8P	2	
C5350-52	ECUX1E104ZFV	C.CAPACITOR CH 25V 0.1U	3	
C5353	ECUX1H220JCV	C.CAPACITOR CH 50V 22P	1	
C5354	ECUX1H181JCV	C.CAPACITOR CH 50V 180P	1	
C5355	ECUX1H030CCV	C.CAPACITOR CH 50V 3P	1	
C5356	ECUX1H180JCV	C.CAPACITOR CH 50V 18P	1	
C5357,58	ECUX1H080DCV	C.CAPACITOR CH 50V 8P	2	
C5400	ECUX1H121JCV	C.CAPACITOR CH 50V 120P	1	
C5401-05	ECUX1E104ZFV	C.CAPACITOR CH 25V 0.1U	5	
C5406,07	ECUX1H102KBV	C.CAPACITOR CH 50V 1000P	2	
C5413-16	ECUX1E104ZFV	C.CAPACITOR CH 25V 0.1U	4	
C5420	ECUX1H121JCV	C.CAPACITOR CH 50V 120P	1	
C5421	ECUX1H221JCV	C.CAPACITOR CH 50V 220P	1	
C5500	ECUX1H121JCV	C.CAPACITOR CH 50V 120P	1	
C5501-05	ECUX1E104ZFV	C.CAPACITOR CH 25V 0.1U	5	
C5506,07	ECUX1H102KBV	C.CAPACITOR CH 50V 1000P	2	
C5514-16	ECUX1E104ZFV	C.CAPACITOR CH 25V 0.1U	3	
C5520	ECUX1H121JCV	C.CAPACITOR CH 50V 120P	1	
C5521	ECUX1H221JCV	C.CAPACITOR CH 50V 220P	1	
C5600-10	ECUX1E104ZFV	C.CAPACITOR CH 25V 0.1U	11	
C5700-10	ECUX1E104ZFV	C.CAPACITOR CH 25V 0.1U	11	

Ref.No.	Part No.	Part Name & Description	Pcs	Remarks
C5801,02	ECUX1H150JCV	C.CAPACITOR CH 50V 15P	2	
D5400,01	MA152WK	DIODE	2	
D5500,01	MA152WK	DIODE	2	
FL5001-05	VLF1016A470	FILTER	5	
IC5003	MC74HC04AF	IC	1	
IC5008,09	TC4S66F	IC	2	
IC5010	XC62AP5002P	IC	1	
IC5011	XC62DN5002P	IC	1	
IC5014	NJM082BM	IC	1	
IC5023,24	MC10H116L	IC	2	
IC5025,26	TC4S69F	IC	2	
IC5027,28	TC4S30F	IC	2	
IC5030-33	TC4S30F	IC	4	
IC5034	XC62DN5002P	IC	1	
IC5035	TC4S71F	IC	1	
IC5040-43	TC4S30F	IC	4	
IC5045	TC4S71F	IC	1	
IC5050	UPC5102GS030	IC	1	
IC5060	UPC5102GS030	IC	1	
L5300,01	VLQ0163J2R2	COIL 2.2UH	2	
L5350,51	VLQ0163J2R2	COIL 2.2UH	2	
L5400,01	VLQ0163J330	COIL 33UH	2	
L5500,01	VLQ0163J330	COIL 33UH	2	
P5001	VJS3375B060	CONNECTOR (FEMALE)	1	
P5002	VJS3900C013	CONNECTOR (FEMALE)	1	
P5003	VJS3900C010	CONNECTOR (FEMALE)	1	
Q5200,01	2SA1022-C	TRANSISTOR	2	
Q5300	2SD601A-R	TRANSISTOR	1	
Q5301	2SB709A-R	TRANSISTOR	1	
Q5302,03	2SC3735B35	TRANSISTOR	2	
Q5350	2SD601A-R	TRANSISTOR	1	
Q5351	2SB709A-R	TRANSISTOR	1	
Q5352,53	2SC3735B35	TRANSISTOR	2	
Q5400	2SA1022-C	TRANSISTOR	1	
Q5401-04	2SD1979	TRANSISTOR	4	
Q5405,06	2SC2954	TRANSISTOR	2	
Q5407,08	2SC3130	TRANSISTOR	2	
Q5409	2SC2954	TRANSISTOR	1	
Q5410,11	2SA1022-C	TRANSISTOR	2	
Q5412,13	2SK508-B	TRANSISTOR	2	
Q5500	2SA1022-C	TRANSISTOR	1	
Q5501-04	2SD1979	TRANSISTOR	4	
Q5505,06	2SC2954	TRANSISTOR	2	
Q5507,08	2SC3130	TRANSISTOR	2	
Q5509	2SC2954	TRANSISTOR	1	
Q5510,11	2SA1022-C	TRANSISTOR	2	
Q5512,13	2SK508-B	TRANSISTOR	2	
Q5600,01	XN5531	TRANSISTOR-RESISTOR	2	
Q5700,01	XN5531	TRANSISTOR-RESISTOR	2	
R5100	ERJ6GEYG682	M.REISITOR CH 1/10W 6.8K	1	
R5101,02	ERJ6GEYG153	M.RESISTOR CH 1/10W 15K	2	
R5103	ERJ6GEYG682	M.REISITOR CH 1/10W 6.8K	1	
R5104,05	ERJ6GEYG153	M.RESISTOR CH 1/10W 15K	2	
R5106-09	ERJ6GEYG103	M.RESISTOR CH 1/10W 10K	4	
R5200,01	ERJ6GEYG103	M.RESISTOR CH 1/10W 10K	2	
R5202	ERJ6GEYG392	M.RESISTOR CH 1/10W 3.9K	1	
R5203,04	ERJ6GEYG103	M.RESISTOR CH 1/10W 10K	2	
R5205	ERJ6GEYG562	M.RESISTOR CH 1/10W 5.6K	1	
R5206	ERJ6GEYG392	M.RESISTOR CH 1/10W 3.9K	1	
R5207,08	ERJ6GEYG103	M.RESISTOR CH 1/10W 10K	2	
R5209	ERJ6GEYG392	M.RESISTOR CH 1/10W 3.9K	1	
R5210,11	ERJ6GEYG103	M.RESISTOR CH 1/10W 10K	2	
R5212	ERJ6GEYG562	M.RESISTOR CH 1/10W 5.6K	1	
R5213	ERJ6GEYG392	M.RESISTOR CH 1/10W 3.9K	1	
R5214	ERJ6GEYG221	M.RESISTOR CH 1/10W 220	1	
R5215,16	ERJ6GEYG471	M.RESISTOR CH 1/10W 470	2	
R5217	ERJ6GEYG102	M.RESISTOR CH 1/10W 1K	1	
R5218	ERJ6GEYG221	M.RESISTOR CH 1/10W 220	1	

Ref.No.	Part No.	Part Name & Description	Pcs	Remarks
R5219,20	ERJ6GEYG471	M.RESISTOR CH 1/10W 470	2	
R5221	ERJ6GEYG102	M.RESISTOR CH 1/10W 1K	1	
R5300	ERJ6GEYG154	M.RESISTOR CH 1/10W 150K	1	
R5302	ERJ6GEYF472	M.RESISTOR CH 1/10W 4.7K	1	
R5303	ERJ6GEYG103	M.RESISTOR CH 1/10W 10K	1	
R5304	ERJ6GEYG222	M.RESISTOR CH 1/10W 2.2K	1	
R5305	ERJ6GEYG392	M.RESISTOR CH 1/10W 3.9K	1	
R5306	ERJ6GEYJ100	M.RESISTOR CH 1/10W 10	1	
R5307	ERJ6GEYF472	M.RESISTOR CH 1/10W 4.7K	1	
R5308	ERJ6GEYG122	M.RESISTOR CH 1/10W 1.2K	1	
R5309,10	ERJ8GCYG101	M.RESISTOR CH 1/8W 100	2	
R5311	ERJ6GEYF472	M.RESISTOR CH 1/10W 4.7K	1	
R5312	ERJ6GEYG122	M.RESISTOR CH 1/10W 1.2K	1	
R5313	ERJ8GCYJ270	M.RESISTOR CH 1/8W 27	1	
R5314	ERJ6GEYG563	M.RESISTOR CH 1/10W 56K	1	
R5350	ERJ6GEYG154	M.RESISTOR CH 1/10W 150K	1	
R5352	ERJ6GEYF472	M.RESISTOR CH 1/10W 4.7K	1	
R5353	ERJ6GEYG103	M.RESISTOR CH 1/10W 10K	1	
R5354	ERJ6GEYG222	M.RESISTOR CH 1/10W 2.2K	1	
R5355	ERJ6GEYG392	M.RESISTOR CH 1/10W 3.9K	1	
R5356	ERJ6GEYJ100	M.RESISTOR CH 1/10W 10	1	
R5357	ERJ6GEYF472	M.RESISTOR CH 1/10W 4.7K	1	
R5358	ERJ6GEYG122	M.RESISTOR CH 1/10W 1.2K	1	
R5359,60	ERJ8GCYG101	M.RESISTOR CH 1/8W 100	2	
R5361	ERJ6GEYF472	M.RESISTOR CH 1/10W 4.7K	1	
R5362	ERJ6GEYG122	M.RESISTOR CH 1/10W 1.2K	1	
R5363	ERJ8GCYJ270	M.RESISTOR CH 1/8W 27	1	
R5364	ERJ6GEYG563	M.RESISTOR CH 1/10W 56K	1	
R5400,01	ERJ6GEYF123	M.RESISTOR CH 1/10W 12K	2	
R5402-04	ERJ6GEYG103	M.RESISTOR CH 1/10W 10K	3	
R5405-08	ERJ6GEYG222	M.RESISTOR CH 1/10W 2.2K	4	
R5409-13	ERJ6GEYG152	M.RESISTOR CH 1/10W 1.5K	5	
R5414	ERJ6GEYG103	M.RESISTOR CH 1/10W 10K	1	
R5415	ERJ8GCYJ221	M.RESISTOR CH 1/8W 220	1	
R5416	ERJ6GEYG103	M.RESISTOR CH 1/10W 10K	1	
R5417	ERJ6GEYG152	M.RESISTOR CH 1/10W 1.5K	1	
R5419	ERJ6GEYG470	M.RESISTOR CH 1/10W 47	1	
R5420,21	ERJ6GEYG272	M.RESISTOR CH 1/10W 2.7K	2	
R5424,25	ERJ6GEYG330	M.RESISTOR CH 1/10W 33	2	
R5426	ERJ6GEYG821	M.RESISTOR CH 1/10W 820	1	
R5427	ERJ6GEYG151	M.RESISTOR CH 1/10W 150	1	
R5428	ERJ6GEYG821	M.RESISTOR CH 1/10W 820	1	
R5429	ERJ6GEYG151	M.RESISTOR CH 1/10W 150	1	
R5430	ERJ12YJ270	M.RESISTOR CH 1/2W 270	1	
R5431	ERJ6GEYG104	M.RESISTOR CH 1/10W 100K	1	
R5432,33	ERJ6GEYG182	M.RESISTOR CH 1/10W 1.8K	2	
R5434	ERJ6GEYF472	M.RESISTOR CH 1/10W 4.7K	1	
R5435	ERJ6GEYG103	M.RESISTOR CH 1/10W 10K	1	
R5440	ERJ6GEYG103	M.RESISTOR CH 1/10W 10K	1	
R5500,01	ERJ6GEYF123	M.RESISTOR CH 1/10W 12K	2	
R5502-04	ERJ6GEYG103	M.RESISTOR CH 1/10W 10K	3	
R5505-08	ERJ6GEYG222	M.RESISTOR CH 1/10W 2.2K	4	
R5509-13	ERJ6GEYG152	M.RESISTOR CH 1/10W 1.5K	5	
R5514	ERJ6GEYG103	M.RESISTOR CH 1/10W 10K	1	
R5515	ERJ8GCYJ221	M.RESISTOR CH 1/8W 220	1	
R5516	ERJ6GEYG103	M.RESISTOR CH 1/10W 10K	1	
R5517	ERJ6GEYG152	M.RESISTOR CH 1/10W 1.5K	1	
R5519	ERJ6GEYG470	M.RESISTOR CH 1/10W 47	1	
R5520,21	ERJ6GEYG272	M.RESISTOR CH 1/10W 2.7K	2	
R5524,25	ERJ6GEYG330	M.RESISTOR CH 1/10W 33	2	
R5526	ERJ6GEYG821	M.RESISTOR CH 1/10W 820	1	
R5527	ERJ6GEYG151	M.RESISTOR CH 1/10W 150	1	
R5528	ERJ6GEYG821	M.RESISTOR CH 1/10W 820	1	
R5529	ERJ6GEYG151	M.RESISTOR CH 1/10W 150	1	
R5530	ERJ12YJ270	M.RESISTOR CH 1/2W 270	1	
R5531	ERJ6GEYG104	M.RESISTOR CH 1/10W 100K	1	
R5532,33	ERJ6GEYG182	M.RESISTOR CH 1/10W 1.8K	2	
R5534	ERJ6GEYF472	M.RESISTOR CH 1/10W 4.7K	1	
R5535	ERJ6GEYG103	M.RESISTOR CH 1/10W 10K	1	
R5540	ERJ6GEYG103	M.RESISTOR CH 1/10W 10K	1	
R5600	ERJ6GEYJ100	M.RESISTOR CH 1/10W 10	1	
R5601,02	ERJ6GEYG470	M.RESISTOR CH 1/10W 47	2	
R5603,04	ERJ6GEYG391	M.RESISTOR CH 1/10W 390	2	
R5605,06	ERJ6GEYG222	M.RESISTOR CH 1/10W 2.2K	2	
R5607,08	ERJ6GEYG470	M.RESISTOR CH 1/10W 47	2	

Ref.No.	Part No.	Part Name & Description	Pcs	Remarks
R5609,10	ERJ6GEYG102	M.RESISTOR CH 1/10W 1K	2	
R5611,12	ERJ6GEYG101	M.RESISTOR CH 1/10W 100	2	
R5613,14	ERJ6GEYG330	M.RESISTOR CH 1/10W 33	2	
R5615-18	ERJ6GEY0R00	M.RESISTOR CH 1/10W 0	4	
R5700	ERJ6GEYJ100	M.RESISTOR CH 1/10W 10	1	
R5701,02	ERJ6GEYG470	M.RESISTOR CH 1/10W 47	2	
R5703,04	ERJ6GEYG121	M.RESISTOR CH 1/10W 120	2	
R5705	ERJ6GEYG222	M.RESISTOR CH 1/10W 2.2K	1	
R5706	ERJ6GEYG153	M.RESISTOR CH 1/10W 15K	1	
R5707,08	ERJ6GEYG470	M.RESISTOR CH 1/10W 47	2	
R5709,10	ERJ6GEYG102	M.RESISTOR CH 1/10W 1K	2	
R5711,12	ERJ6GEYG101	M.RESISTOR CH 1/10W 100	2	
R5713,14	ERJ6GEYG330	M.RESISTOR CH 1/10W 33	2	
R5715-18	ERJ6GEY0R00	M.RESISTOR CH 1/10W 0	4	
TG5001,02	VJR0646	TEST POINT	2	
TP5001-04	VJR0646	TEST POINT	4	
		MISCELLANEOUS		
	VMP5846	RF HOLDER ANGLE	1	
	VYQ1745	RF SHIELD CASE (UPPER)	1	
	VSC4386	RF SHIELD CASE (MIDDLE)	1	
	XTV3+6FFR	SCREW	2	
	VSC4437	RF SHIELD CASE (LOWER)	1	
	VMZ2588	RF BARRIER	1	
	VEE9862	GND CABLE	1	
■E13	VEP80991A	AC HEAD I/F P.C.BOARD	1	(RTL)
P1	VJP2278	CONNECTOR (MALE)	1	
P2	VJP1881T	CONNECTOR (MALE)	1	
■E14	VEP83224A	V/S JACK P.C.BOARD	1	(RTL)
C1,C2	ECUM1E104ZFN	C.CAPACITOR CH 25V 0.1U	2	
C4	ECA1CXS470	E.CAPACITOR 16V 47U	1	
C5,C6	ECUM1E104ZFN	C.CAPACITOR CH 25V 0.1U	2	
C8	ECA1CXS470	E.CAPACITOR 16V 47U	1	
C9,10	ECUM1E104ZFN	C.CAPACITOR CH 25V 0.1U	2	
C11	ECUX1H270JCV	C.CAPACITOR CH 50V 27P	1	
C12,13	ECUM1E104ZFN	C.CAPACITOR CH 25V 0.1U	2	
C14	ECUX1H270JCV	C.CAPACITOR CH 50V 27P	1	
C15,16	ECUM1E104ZFN	C.CAPACITOR CH 25V 0.1U	2	
C17	ECUX1H270JCV	C.CAPACITOR CH 50V 27P	1	
C18,19	ECUM1E104ZFN	C.CAPACITOR CH 25V 0.1U	2	
C20	ECUX1H270JCV	C.CAPACITOR CH 50V 27P	1	
C21,22	ECUM1E104ZFN	C.CAPACITOR CH 25V 0.1U	2	
C23	ECUX1H270JCV	C.CAPACITOR CH 50V 27P	1	
C24,25	ECUM1E104ZFN	C.CAPACITOR CH 25V 0.1U	2	
C26	ECUX1H270JCV	C.CAPACITOR CH 50V 27P	1	
C27	ECUM1E104ZFN	C.CAPACITOR CH 25V 0.1U	1	
C28,29	ECA1CXS470	E.CAPACITOR 16V 47U	2	
C30	ECUM1E104ZFN	C.CAPACITOR CH 25V 0.1U	1	
C31,32	ECA1CXS470	E.CAPACITOR 16V 47U	2	
C33-38	ECUM1H101JCN	C.CAPACITOR CH 50V 100P	6	
C50,51	ECUM1E104ZFN	C.CAPACITOR CH 25V 0.1U	2	
C203	ECUM1H331JCN	C.CAPACITOR CH 50V 330P	1	
C204-27	ECUX1H102JCN	C.CAPACITOR CH 50V 1000P	24	
C240-42	ECA1CXS100	E.CAPACITOR 16V 10U	3	
C243	ECA1CXS470	E.CAPACITOR 16V 47U	1	
C244	ECUM1E104ZFN	C.CAPACITOR CH 25V 0.1U	1	
C250-57	ECUM1E104ZFN	C.CAPACITOR CH 25V 0.1U	8	
D1-D5	MA152K	DIODE	5	
D6-11	MA3130-L	DIODE	6	
D201,02	MA152K	DIODE	2	
IC1	NJM78L09UA	IC	1	
IC2	NJM79L09UA	IC	1	

Ref.No.	Part No.	Part Name & Description	Pcs	Remarks
IC3	NJM78L09UA	IC	1	
IC4	NJM79L09UA	IC	1	
IC5	NJM78L09UA	IC	1	
IC6	NJM79L09UA	IC	1	
IC201,02	MC14021BF	IC	2	
IC203	SN74S1051NS	IC	1	
IC205,06	MC14094BF	IC	2	
IC207	MC14050BF	IC	1	
IC208	MC14049UBF	IC	1	
IC209	NJM78L09UA	IC	1	
IC210	NJM79L09UA	IC	1	
J1,J2	VJS3902	CONNECTOR (FEMALE)	2	
J3	VJS3901	CONNECTOR (FEMALE)	1	
J4,J5	VJS3902	CONNECTOR (FEMALE)	2	
J14,15	VJP3414A009	CONNECTOR (MALE)	2	
J16	VJP3414A015	CONNECTOR (MALE)	1	
J17,18	VJP3414A025	CONNECTOR (MALE)	2	
L1	VLQEL05F101J	COIL 100UH	1	
P1	VJP3375A060	CONNECTOR (MALE)	1	
Q1	2SA1022-C	TRANSISTOR	1	
Q2	2SC2295-C	TRANSISTOR	1	
Q3	2SA1022-C	TRANSISTOR	1	
Q4	2SC2295-C	TRANSISTOR	1	
Q5	2SA1022-C	TRANSISTOR	1	
Q6	2SC2295-C	TRANSISTOR	1	
Q7	2SA1022-C	TRANSISTOR	1	
Q8	2SC2295-C	TRANSISTOR	1	
Q9	2SA1022-C	TRANSISTOR	1	
Q10	2SC2295-C	TRANSISTOR	1	
Q11	2SB709A-R	TRANSISTOR	1	
Q12,13	2SD601A-R	TRANSISTOR	2	
Q14	2SB709A-R	TRANSISTOR	1	
Q15,16	2SD601A-R	TRANSISTOR	2	
Q17	2SB709A-R	TRANSISTOR	1	
Q18,19	2SD601A-R	TRANSISTOR	2	
Q20	2SB709A-R	TRANSISTOR	1	
Q21,22	2SD601A-R	TRANSISTOR	2	
Q23	2SB709A-R	TRANSISTOR	1	
Q24,25	2SD601A-R	TRANSISTOR	2	
Q26	2SB709A-R	TRANSISTOR	1	
Q27,28	2SD601A-R	TRANSISTOR	2	
Q201-12	UN2214	TRANSISTOR-RESISTOR	12	
R1	ERJ6RED750	M.RESISTOR CH 1/10W 75	1	
R2	ERJ6GEYG470	M.RESISTOR CH 1/10W 47	1	
R3	ERJ6GEYJ334	M.RESISTOR CH 1/10W 330K	1	
R4	ERJ6GEYG332	M.RESISTOR CH 1/10W 3.3K	1	
R5,R6	ERJ6GEYG470	M.RESISTOR CH 1/10W 47	2	
R7	ERJ6GEYG102	M.RESISTOR CH 1/10W 1K	1	
R8	ERJ6GEYG330	M.RESISTOR CH 1/10W 33	1	
R9	ERJ6RED750	M.RESISTOR CH 1/10W 75	1	
R10	ERJ6GEYG470	M.RESISTOR CH 1/10W 47	1	
R11	ERJ6GEYJ334	M.RESISTOR CH 1/10W 330K	1	
R12	ERJ6GEYG332	M.RESISTOR CH 1/10W 3.3K	1	
R13,14	ERJ6GEYG470	M.RESISTOR CH 1/10W 47	2	
R15	ERJ6GEYG102	M.RESISTOR CH 1/10W 1K	1	
R16	ERJ6GEYG330	M.RESISTOR CH 1/10W 33	1	
R17	ERJ6RED750	M.RESISTOR CH 1/10W 75	1	
R18	ERJ6GEYG470	M.RESISTOR CH 1/10W 47	1	
R19	ERJ6GEYJ334	M.RESISTOR CH 1/10W 330K	1	
R20	ERJ6GEYG332	M.RESISTOR CH 1/10W 3.3K	1	
R21,22	ERJ6GEYG470	M.RESISTOR CH 1/10W 47	2	
R23	ERJ6GEYG102	M.RESISTOR CH 1/10W 1K	1	
R24	ERJ6GEYG330	M.RESISTOR CH 1/10W 33	1	
R25	ERJ6RED750	M.RESISTOR CH 1/10W 75	1	
R26	ERJ6GEYG470	M.RESISTOR CH 1/10W 47	1	
R27	ERJ6GEYJ334	M.RESISTOR CH 1/10W 330K	1	
R28	ERJ6GEYG332	M.RESISTOR CH 1/10W 3.3K	1	
R29,30	ERJ6GEYG470	M.RESISTOR CH 1/10W 47	2	
R31	ERJ6GEYG102	M.RESISTOR CH 1/10W 1K	1	
R32	ERJ6GEYG330	M.RESISTOR CH 1/10W 33	1	

Ref.No.	Part No.	Part Name & Description	Pcs	Remarks
R33	ERJ6RED750	M.RESISTOR CH 1/10W 75	1	
R34	ERJ6GEYG470	M.RESISTOR CH 1/10W 47	1	
R35	ERJ6GEYJ334	M.RESISTOR CH 1/10W 330K	1	
R36	ERJ6GEYG332	M.RESISTOR CH 1/10W 3.3K	1	
R37,38	ERJ6GEYG470	M.RESISTOR CH 1/10W 47	2	
R39	ERJ6GEYG102	M.RESISTOR CH 1/10W 1K	1	
R40	ERJ6GEYG330	M.RESISTOR CH 1/10W 33	1	
R41,42	ERJ6GEYG222	M.RESISTOR CH 1/10W 2.2K	2	
R43	ERJ6GEYG470	M.RESISTOR CH 1/10W 47	1	
R44	ERJ6GEYG222	M.RESISTOR CH 1/10W 2.2K	1	
R45,46	ERJ6GEYG221	M.RESISTOR CH 1/10W 220	2	
R47	ERJ6RED750	M.RESISTOR CH 1/10W 75	1	
R48-50	ERJ6GEYG222	M.RESISTOR CH 1/10W 2.2K	3	
R51	ERJ6GEYG470	M.RESISTOR CH 1/10W 47	1	
R52	ERJ6GEYG222	M.RESISTOR CH 1/10W 2.2K	1	
R53,54	ERJ6GEYG221	M.RESISTOR CH 1/10W 220	2	
R55	ERJ6RED750	M.RESISTOR CH 1/10W 75	1	
R56-58	ERJ6GEYG222	M.RESISTOR CH 1/10W 2.2K	3	
R59	ERJ6GEYG470	M.RESISTOR CH 1/10W 47	1	
R60	ERJ6GEYG222	M.RESISTOR CH 1/10W 2.2K	1	
R61,62	ERJ6GEYG221	M.RESISTOR CH 1/10W 220	2	
R63	ERJ6RED750	M.RESISTOR CH 1/10W 75	1	
R64-66	ERJ6GEYG222	M.RESISTOR CH 1/10W 2.2K	3	
R67	ERJ6GEYG470	M.RESISTOR CH 1/10W 47	1	
R68	ERJ6GEYG222	M.RESISTOR CH 1/10W 2.2K	1	
R69,70	ERJ6GEYG221	M.RESISTOR CH 1/10W 220	2	
R71	ERJ6RED750	M.RESISTOR CH 1/10W 75	1	
R72-74	ERJ6GEYG222	M.RESISTOR CH 1/10W 2.2K	3	
R75	ERJ6GEYG470	M.RESISTOR CH 1/10W 47	1	
R76	ERJ6GEYG222	M.RESISTOR CH 1/10W 2.2K	1	
R77,78	ERJ6GEYG221	M.RESISTOR CH 1/10W 220	2	
R79	ERJ6RED750	M.RESISTOR CH 1/10W 75	1	
R80-82	ERJ6GEYG222	M.RESISTOR CH 1/10W 2.2K	3	
R83	ERJ6GEYG470	M.RESISTOR CH 1/10W 47	1	
R84	ERJ6GEYG222	M.RESISTOR CH 1/10W 2.2K	1	
R85,86	ERJ6GEYG221	M.RESISTOR CH 1/10W 220	2	
R87	ERJ6RED750	M.RESISTOR CH 1/10W 75	1	
R88	ERJ6GEYG222	M.RESISTOR CH 1/10W 2.2K	1	
R201,02	ERJ6GEYG682	M.REISITOR CH 1/10W 6.8K	2	
R203	ERJ6GEYG103	M.RESISTOR CH 1/10W 10K	1	
R204	ERJ6GEYG474	M.RESISTOR CH 1/10W 470K	1	
R205	ERJ6GEYG103	M.RESISTOR CH 1/10W 10K	1	
R206	ERJ6GEYG474	M.RESISTOR CH 1/10W 470K	1	
R207	ERJ6GEYG223	M.RESISTOR CH 1/10W 22K	1	
R208	ERJ6GEYG101	M.RESISTOR CH 1/10W 100	1	
R209-32	ERJ6GEYG103	M.RESISTOR CH 1/10W 10K	24	
R241	ERJ6GEYG103	M.RESISTOR CH 1/10W 10K	1	
R242	ERJ6GEYG474	M.RESISTOR CH 1/10W 470K	1	
R243	ERJ6GEYF473	M.RESISTOR CH 1/10W 47K	1	
▪ R244	ERQ12HJ2R7	F.RESISTOR 1/2W 2.7	1	
R251-55	ERJ6GEYG122	M.RESISTOR CH 1/10W 1.2K	5	
SW1,W2	VSS0307	SWITCH	2	
		MISCELLANEOUS		
	VMP5684	P.C.BOARD ANGLE	1	
	VMP4866	D SUB ANGLE	1	
	VXQ0102	SCREW	10	
	XTN26+6FFZ	SCREW	4	
	XTN3+10JFZ	SCREW	5	
	XYE3+EF8	SCREW	2	
■ E15	VEP81183A	POWER 1 P.C.BOARD	1	(RTL)
▪ C1101	ECQU2A224MV	P.CAPACITOR 100V 0.22U	1	
▪ C1102,03	VCK0262K471A	C.CAPACITOR 470P	2	
▪ C1104	ECQU2A474MV	P.CAPACITOR 100V 0.47U	1	
▪ C1105,06	VCK0262K101A	C.CAPACITOR 100P	2	
▪ C1107,08	VCK0260M152A	C.CAPACITOR 1500P	2	
▪ C1109	VCK0260M102A	C.CAPACITOR 1000P	1	
C1110,11	ECUM1H104ZFN	C.CAPACITOR CH 50V 0.1U	2	
C1112	VCK0293	C.CAPACITOR	1	

Ref.No.	Part No.	Part Name & Description	Pcs	Remarks
C1115,16	VCK0106K471	C.CAPACITOR 470P	2	
C1117,18	ECEC2WC151EB	E.CAPACITOR 450V 150U	2	
C1119,20	VCK0106K471	C.CAPACITOR 470P	2	
C1121	ECA1HXLV100	E.CAPACITOR 50V 10U	1	
C1122	ECA1HXS100	E.CAPACITOR 50V 10U	1	
C1124,25	ECUM1E474ZFM	C.CAPACITOR CH 25V 0.47U	2	
C1126	ECUM1H102KBN	C.CAPACITOR CH 50V 1000P	1	
C1127	ECQV1H684JF	P.CAPACITOR 50V 0.68U	1	
C1128	ECA1HFQ101	E.CAPACITOR 50V 100U	1	
C1129	ECUM1H103KBN	C.CAPACITOR CH 50V 0.01U	1	
C1130	ECUM1H104ZFN	C.CAPACITOR CH 50V 0.1U	1	
C1131	ECQF6222JZ	P.CAPACITOR 630V 2200P	1	
C1132,33	ECUM1H104ZFN	C.CAPACITOR CH 50V 0.1U	2	
C1134	ECUM1H472KBN	C.CAPACITOR CH 50V 4700P	1	
D1101	RBV606	DIODE	1	
D1102	TM1661S-L	DIODE	1	
D1103	U1GU44	DIODE	1	
D1104	FML-36S	DIODE	1	
D1105,06	ERA15-08	DIODE	2	
D1107,08	MA3200-M	DIODE	2	
D1110	MA151K	DIODE	1	
D1111-13	U1GU44	DIODE	3	
D1114,15	MA3068-M	DIODE	2	
D1116	MA3200-M	DIODE	1	
D1117	MA151K	DIODE	1	
IC1101	MC33262P	IC	1	
IC1102	M51945BL	IC	1	
IC1103	M51953BL	IC	1	
▪ L1101	ELF18D850C	FILTER	1	
▪ L1102,03	ELF18D604F	FILTER	2	
L1105	VLQ0820	COIL	1	
P1101	VJP2638	CONNECTOR (MALE)	1	
P1102,03	VJP2639	CONNECTOR (MALE)	2	
P1104	VJP4033	CONNECTOR (MALE)	1	
Q1101,02	2SK1941-01R	TRANSISTOR	2	
Q1105	UN2213	TRANSISTOR-RESISTOR	1	
▪ R1101	ERC12AGM334	S.RESISTOR 1/2W 330K	1	
▪ R1102,03	ERU5TEJ100	F.RESISTOR 5W 10	2	
R1104	ERJ6GEYG103	M.RESISTOR CH 1/10W 10K	1	
R1105,06	ERG2SJ220	M.RESISTOR 2W 22	2	
R1107	VRE0206	M.RESISTOR	1	
R1108	ERJ14YJ100	M.RESISTOR CH 1/4W 10	1	
R1109	ERJ14YJ220	M.RESISTOR CH 1/4W 22	1	
R1110	ERJ14YJ100	M.RESISTOR CH 1/4W 10	1	
R1111	ERJ14YJ220	M.RESISTOR CH 1/4W 22	1	
R1112	ERJ14YJ100	M.RESISTOR CH 1/4W 10	1	
R1113	ERJ12YJ473	M.RESISTOR CH 1/2W 47K	1	
R1114	ERJ6GEYF123	M.RESISTOR CH 1/10W 12K	1	
R1115,16	ERJ6GEYG221	M.RESISTOR CH 1/10W 220	2	
R1117,18	ERG3SJ333	M.RESISTOR 3W 33K	2	
R1119	ERJ6RBD273	M.RESISTOR CH 1/10W 27K	1	
R1120	ERJ6RBD183	M.RESISTOR CH 1/10W 18K	1	
R1122	ERJ12YJ473	M.RESISTOR CH 1/2W 47K	1	
R1123	ERJ14YJ474	M.RESISTOR CH 1/4W 470K	1	
R1125	ERJ6GEY0R00	M.RESISTOR CH 1/10W 0	1	
R1127	ERJ6GEY0R00	M.RESISTOR CH 1/10W 0	1	
R1129	ERJ14YJ474	M.RESISTOR CH 1/4W 470K	1	
R1130	ERJ6GEYG103	M.RESISTOR CH 1/10W 10K	1	
R1131	ERJ6GEYG221	M.RESISTOR CH 1/10W 220	1	
R1132	ERJ6GEYG470	M.RESISTOR CH 1/10W 47	1	
R1133	ERJ6GEYG390	M.RESISTOR CH 1/10W 39	1	
R1134,35	ERJ14YJ224	M.RESISTOR CH 1/4W 220K	2	
R1136	ERJ14YJ154	M.RESISTOR CH 1/4W 150K	1	
R1137	ERJ6RBD103	M.RESISTOR CH 1/10W 10K	1	
R1138	ERJ6GEYF472	M.RESISTOR CH 1/10W 4.7K	1	
R1139-41	ERJ12YJ154	M.RESISTOR CH 1/2W 150K	3	
R1142	ERJ6RBD272	M.RESISTOR CH 1/10W 2.7K	1	
R1143,44	ERJ12YJ224	M.RESISTOR CH 1/2W 220K	2	
R1145	ERJ6GEYG103	M.RESISTOR CH 1/10W 10K	1	

Ref.No.	Part No.	Part Name & Description	Pcs	Remarks
R1146	VRT0142	THERMISTOR	1	
R1147	ERG2SJ471	M.RESISTOR 2W 470	1	
R1148-50	ERJ12YJ154	M.RESISTOR CH 1/2W 150K	3	
R1151	ERJ6RBD223	M.RESISTOR CH 1/10W 22K	1	
R1153,54	ERJ12YJ473	M.RESISTOR CH 1/2W 47K	2	
R1155,56	ERJ6GEYG103	M.RESISTOR CH 1/10W 10K	2	
R1158	ERJ6GEY0R00	M.RESISTOR CH 1/10W 0	1	
R1159	ERJ6GEYG104	M.RESISTOR CH 1/10W 100K	1	
R1160	ERJ6RED224	M.RESISTOR CH 1/10W 220K	1	
R1161	ERJ6RBD104	M.RESISTOR CH 1/10W 100K	1	
R1162	ERJ6RED334	M.RESISTOR CH 1/10W 330K	1	
R1163	ERJ6GEYG474	M.RESISTOR CH 1/10W 470K	1	
R1165	ERJ6GEYG273	M.RESISTOR CH 1/10W 27K	1	
R1166	ERJ6GEYG102	M.RESISTOR CH 1/10W 1K	1	
VR1102	VRV0109B501	V.RESISTOR 500	1	
		MISCELLANEOUS		
▪	VMZ0965	CAPACITOR COVER	3	
▪	VMZ1608	CAPACITOR COVER	4	
	VSC4708	HEAT SINK (A)	1	
	XYE3+EF8	SCREW	2	
	XYN3+F6FZS	SCREW	1	
	XYN3+F8	SCREW	5	
	XYN3+F10	SCREW	1	
	VJR1008	EARTH LUG	3	
■ E16	VEP81184B	POWER 2 P.C.BOARD	1	(RTL)
C1002,03	ECUM1H222KBN	C.CAPACITOR CH 50V 2200P	2	
C1004-07	ECUM1H104ZFN	C.CAPACITOR CH 50V 0.1U	4	
C1008	ECUM1H222KBN	C.CAPACITOR CH 50V 2200P	1	
C1009,10	ECA1HXLV220	E.CAPACITOR 50V 22U	2	
C1011	ECA1HXLV010	E.CAPACITOR 50V 1U	1	
C1012	ECUM1H332KBN	C.CAPACITOR CH 50V 3300P	1	
C1013	ECA1HXLV010	E.CAPACITOR 50V 1U	1	
C1015	ECUM1H332KBN	C.CAPACITOR CH 50V 3300P	1	
C1016	ECHU1H471GB	P.CAPACITOR 50V 470P	1	
C1017	ECUM1H104KBN	C.CAPACITOR CH 50V 0.1U	1	
C1018	ECUM1E104KBM	C.CAPACITOR CH 25V 0.1U	1	
C1019	ECUM1H562KBN	C.CAPACITOR CH 50V 5600P	1	
C1020	ECUM1H104KBN	C.CAPACITOR CH 50V 0.1U	1	
C1021	ECHU1H471GB	P.CAPACITOR 50V 470P	1	
C1022	ECUM1H562KBN	C.CAPACITOR CH 50V 5600P	1	
C1023	ECUM1E104KBM	C.CAPACITOR CH 25V 0.1U	1	
C1024	ECUM1H104ZFN	C.CAPACITOR CH 50V 0.1U	1	
C1026	ECUM1E474ZFM	C.CAPACITOR CH 25V 0.47U	1	
C1027,28	ECUM1H104ZFN	C.CAPACITOR CH 50V 0.1U	2	
C1040,41	EEUFA1A332LE	E.CAPACITOR 10V 3300U	2	
C1042	EEUFA1V471E	E.CAPACITOR 35V 470U	1	
C1043	EEUFA1E332E	E.CAPACITOR 25V 3300U	1	
C1044,45	EEUFA1C222LE	E.CAPACITOR 16V 2200P	2	
C1046	EEUFA1E681E	E.CAPACITOR 25V 680P	1	
C1047,48	ECA1CXL101	E.CAPACITOR 16V 100U	2	
C1049	ECA1VHG471	E.CAPACITOR 35V 100U	1	
C1050	ECA1EXLV101	E.CAPACITOR 25V 100U	1	
C1051-53	ECA1CXL101	E.CAPACITOR 16V 100U	3	
C1054	ECUM1E104KBM	C.CAPACITOR CH 25V 0.1U	1	
C1055	ECUM1H104ZFN	C.CAPACITOR CH 50V 0.1U	1	
C1056	ECUM1E104KBM	C.CAPACITOR CH 25V 0.1U	1	
C1059	ECUM1H104ZFN	C.CAPACITOR CH 50V 0.1U	1	
C1060	ECUM1H121JCN	C.CAPACITOR CH 50V 120P	1	
C1062	VCK0106K151	C.CAPACITOR 150P	1	
C1063	ECA1VXLV470	E.CAPACITOR 35V 47U	1	
C1065	VCK0106K151	C.CAPACITOR 150P	1	
C1066	ECA1VXLV470	E.CAPACITOR 35V 47U	1	
C1067,68	ECQE6473KF	P.CAPACITOR 630V 0.047U	2	
C1069-75	ECKD2H101KB	C.CAPACITOR 500V 100P	7	
C1076-78	EEUFA1A822E	E.CAPACITOR 10V 8200P	3	
C1079	ECUM1H121JCN	C.CAPACITOR CH 50V 120P	1	
C1080,81	ECUM1H222KBN	C.CAPACITOR CH 50V 2200P	2	
C1083	ECUM1H104ZFN	C.CAPACITOR CH 50V 0.1U	1	

Ref.No.	Part No.	Part Name & Description	Pcs	Remarks
C1085	EEUFA1C222LE	E.CAPACITOR 16V 2200P	1	
C1086	ECUM1H102KBN	C.CAPACITOR CH 50V 1000P	1	
C1087	ECUM1H104ZFN	C.CAPACITOR CH 50V 0.1U	1	
C1088	EEUFA1A822E	E.CAPACITOR 10V 8200P	1	
C1089	ECA1HXS100	E.CAPACITOR 50V 10U	1	
C1090-93	ECUM1H104ZFN	C.CAPACITOR CH 50V 0.1U	4	
C1094	ECUM1H102KBN	C.CAPACITOR CH 50V 1000P	1	
C1095	ECUM1E474ZFM	C.CAPACITOR CH 25V 0.47U	1	
C1096	ECA1CXL101	E.CAPACITOR 16V 100U	1	
C1097,98	ECUM1E474ZFM	C.CAPACITOR CH 25V 0.47U	2	
C1099	ECUM1H104ZFN	C.CAPACITOR CH 50V 0.1U	1	
D1001	MA151WK	DIODE	1	
D1004	MA151K	DIODE	1	
D1005	MA151WK	DIODE	1	
D1007	MA3082-H	DIODE	1	
D1008	MA3051-M	DIODE	1	
D1009	MA153	DIODE	1	
D1010	U1GU44	DIODE	1	
D1011	MA151K	DIODE	1	
D1012	MA3240-H	DIODE	1	
D1013,14	U1GU44	DIODE	2	
D1015	MA3240-H	DIODE	1	
D1017	U1GU44	DIODE	1	
D1018,19	MA3051-M	DIODE	2	
D1020-22	MA151K	DIODE	3	
D1023,24	MA3051-M	DIODE	2	
D1030	D30SC4M	DIODE	1	
D1031	FML-G12SP	DIODE	1	
D1032	RL4ZP	DIODE	1	
D1033,34	FML-G12SP	DIODE	2	
D1035	FMB-G14L	DIODE	1	
D1036	FML-G12SP	DIODE	1	
D1037,38	MA3075-M	DIODE	2	
D1039	MA3240-H	DIODE	1	
D1040	MA3160-L	DIODE	1	
D1041,42	MA3130-L	DIODE	2	
D1043	MA3160-L	DIODE	1	
D1044,45	U05NU44	DIODE	2	
D1046	EG01C	DIODE	1	
D1047	U1GU44	DIODE	1	
D1048	MA3240-H	DIODE	1	
D1049	EG01C	DIODE	1	
D1050	U1GU44	DIODE	1	
D1051	MA3240-H	DIODE	1	
D1052	MA151K	DIODE	1	
IC1001,02	FA5311BP	IC	2	
IC1011,12	UPC1093J	IC	2	
IC1013	UPC393C	IC	1	
IC1014	PQ30RV31	IC	1	
J1001	VWJ0121	CABLE	1	
L1012	VLQ0479	COIL	1	
L1013	VLQ0605	COIL	1	
L1014	VLQ0655K220	COIL 22UH	1	
L1015,16	VLQ0605	COIL	2	
L1017	VLQ0354	COIL	1	
L1018	VLQ0655K220	COIL 22UH	1	
L1019	VLP0074	COIL	1	
L1021,22	VLP0074	COIL	2	
P1011	VJP2824B003	CONNECTOR (MALE)	1	
P1012	VJP2824B009	CONNECTOR (MALE)	1	
P1013	VJP2824B008	CONNECTOR (MALE)	1	
P1014	VJP1243T	CONNECTOR (MALE) 3P	1	
P1015	VJP4033	CONNECTOR (MALE)	1	
Q1002,03	2SD1478-R	TRANSISTOR	2	
Q1004	2SB710-R	TRANSISTOR	1	
Q1005	UN2213	TRANSISTOR-RESISTOR	1	
Q1006,07	2SB709-R	TRANSISTOR	2	
Q1011,12	2SK2258-01	TRANSISTOR	2	
▪ Q1013-15	PS2561L1V1WL	TRANSISTOR	3	

Ref.No.	Part No.	Part Name & Description	Pcs	Remarks
Q1017	UN2214	TRANSISTOR-RESISTOR	1	
Q1018	UN2211	TRANSISTOR-RESISTOR	1	
Q1019	UN2111	TRANSISTOR-RESISTOR	1	
▪ Q1020	PS2561L1V1WL	TRANSISTOR	1	
Q1022	UN2113	TRANSISTOR-RESISTOR	1	
Q1023	UN2213	TRANSISTOR-RESISTOR	1	
Q1024	UN2214	TRANSISTOR-RESISTOR	1	
R1001-05	ERJ6GEYG121	M.RESISTOR CH 1/10W 120	5	
R1006	ERG2SJ681	M.RESISTOR 2W 680	1	
R1007,08	ERJ6GEYG105	M.RESISTOR CH 1/10W 1M	2	
R1009	ERJ14YJ4R7	M.RESISTOR CH 1/4W 4.7	1	
R1010	ERJ6GEYG104	M.RESISTOR CH 1/10W 100K	1	
R1011	ERJ6RBD241	M.RESISTOR CH 1/10W 240	1	
R1012,13	ERJ6GEYG104	M.RESISTOR CH 1/10W 100K	2	
R1014	ERJ6GEYG154	M.RESISTOR CH 1/10W 150K	1	
R1016	ERJ14YJ4R7	M.RESISTOR CH 1/4W 4.7	1	
R1017	ERJ6RBD241	M.RESISTOR CH 1/10W 240	1	
R1018,19	ERJ6GEYJ225	M.RESISTOR CH 1/10W 2.2M	2	
R1020	ERJ14YJ100	M.RESISTOR CH 1/4W 10	1	
R1021	ERG3SJ333	M.RESISTOR 3W 33K	1	
R1023,24	ERJ12YJ154	M.RESISTOR CH 1/2W 150K	2	
R1026	ERJ6GEYG683	M.RESISTOR CH 1/10W 68K	1	
R1027	ERJ6GEYG563	M.RESISTOR CH 1/10W 56K	1	
R1028	ERJ6RBD472	M.RESISTOR CH 1/10W 4.7K	1	
R1029	ERJ6GEYG221	M.RESISTOR CH 1/10W 220	1	
R1030	ERJ6RBD471	M.RESISTOR CH 1/10W 470	1	
R1031	ERJ14YJ100	M.RESISTOR CH 1/4W 10	1	
R1033,34	ERJ12YJ154	M.RESISTOR CH 1/2W 150K	2	
R1036	ERJ6GEYG104	M.RESISTOR CH 1/10W 100K	1	
R1037	ERJ6RBD472	M.RESISTOR CH 1/10W 4.7K	1	
R1038	ERJ6GEYG471	M.RESISTOR CH 1/10W 470	1	
R1039	ERJ6RBD681	M.RESISTOR CH 1/10W 680	1	
R1040,41	ERJ6GEYG121	M.RESISTOR CH 1/10W 120	2	
R1042	ERJ6GEYJ334	M.RESISTOR CH 1/10W 330K	1	
R1043	ERJ6RBD621	M.RESISTOR CH 1/10W 620	1	
R1044	ERJ6RBD391	M.RESISTOR CH 1/10W 390	1	
R1046,47	ERJ6GEYJ334	M.RESISTOR CH 1/10W 330K	2	
R1048,49	ERJ6GEYF473	M.RESISTOR CH 1/10W 47K	2	
R1050	ERG2SJ470	M.RESISTOR 2W 47	1	
R1051,52	ERJ6GEYG183	M.RESISTOR CH 1/10W 18K	2	
R1053	ERJ6RBD182	M.RESISTOR CH 1/10W 1.8K	1	
R1054	ERG2SJ470	M.RESISTOR 2W 47	1	
R1055	VRT0142	THERMISTOR	1	
R1056	ERJ6GEYG331	M.RESISTOR CH 1/10W 330	1	
R1057	ERJ6GEYG103	M.RESISTOR CH 1/10W 10K	1	
R1058	ERJ6RBD362	M.RESISTOR CH 1/10W 3.6K	1	
R1059	ERJ6RBD471	M.RESISTOR CH 1/10W 470	1	
R1060	ERJ6GEYG103	M.RESISTOR CH 1/10W 10K	1	
R1061	ERJ6GEYG104	M.RESISTOR CH 1/10W 100K	1	
R1062	VRT0033	THERMISTOR	1	
R1063	ERJ6GEYG221	M.RESISTOR CH 1/10W 220	1	
R1064,65	ERG2SJ681	M.RESISTOR 2W 680	2	
R1066	ERJ6GEYG331	M.RESISTOR CH 1/10W 330	1	
R1067	ERJ6GEYG121	M.RESISTOR CH 1/10W 120	1	
R1068	ERJ6GEYG103	M.RESISTOR CH 1/10W 10K	1	
R1069	ERJ6RBD682	M.RESISTOR CH 1/10W 6.8K	1	
R1070	ERJ6RBD162	M.RESISTOR CH 1/10W 1.6K	1	
R1071	ERJ6GEYG103	M.RESISTOR CH 1/10W 10K	1	
R1072	ERG3SJ333	M.RESISTOR 3W 33K	1	
R1073	ERG2SJ180	M.RESISTOR 2W 18	1	
R1074	ERJ14YJ390	M.RESISTOR 1/4W 39	1	
R1075	ERJ6GEYG104	M.RESISTOR CH 1/10W 100K	1	
R1076	ERW1PKR33	W.RESISTOR 1W 0.33	1	
R1077	ERG3SJ333	M.RESISTOR 3W 33K	1	
R1078	ERG2SJ180	M.RESISTOR 2W 18	1	
R1079	ERJ14YJ220	M.RESISTOR CH 1/4W 22	1	
R1080	ERJ6GEYG104	M.RESISTOR CH 1/10W 100K	1	
R1081	ERW1PKR33	W.RESISTOR 1W 0.33	1	
R1082,83	ERJ6RBD103	M.RESISTOR CH 1/10W 10K	2	
R1084	ERJ6RBD132	M.RESISTOR CH 1/10W 1.3K	1	
R1085,86	ERJ6RBD103	M.RESISTOR CH 1/10W 10K	2	
R1087	ERJ6GEYG103	M.RESISTOR CH 1/10W 10K	1	
R1088	VRE0206	M.RESISTOR	1	
R1089	ERJ14YJ154	M.RESISTOR CH 1/4W 150K	1	

Ref.No.	Part No.	Part Name & Description	Pcs	Remarks
R1090	ERJ6RBD122	M.RESISTOR CH 1/10W 1.2K	1	
R1091,92	ERJ6RBD103	M.RESISTOR CH 1/10W 10K	2	
R1093,94	ERJ6GEYG103	M.RESISTOR CH 1/10W 10K	2	
R1095	ERX2SZJR10	M.RESISTOR 2W 0.1	1	
R1097	ERJ6GEYG223	M.RESISTOR CH 1/10W 22K	1	
R1098	ERJ6GEYG103	M.RESISTOR CH 1/10W 10K	1	
R1099	ERG3SJ333	M.RESISTOR 3W 33K	1	
▪ T1001	VLT0899	TRANSFORMER	1	
▪ T1002	VLT0900	TRANSFORMER	1	
VR1001,02	VRV0112B501	V.RESISTOR 500	2	
		MISCELLANEOUS		
	VLP0394	FERRITE BEAD	8	
	VLP0337	AMORPHOUS BEAD	2	
	VLP0394	FERRITE BEAD	3	
	VSC4779	HEAT SINK (E)	1	
	VSC4778	HEAT SINK (F)	1	
	XYN3+F8	SCREW	13	
	XYN3+F6	SCREW	2	
	VJR1008	EARTH LUG	2	
	XYN3+F10	SCREW	2	
	XYE3+EF8	SCREW	4	
	VSC4707	HEAT SINK	1	
	VMZ2779	INSULATION	1	
	VEE0C18	GND CABLE	1	
	VSC4780	HEAT SINK (D)	1	
	VMZ2919	SHEET	2	
■E17	VEP80A58A	POWER INT P.C.BOARD	1	(RTL)
		MISCELLANEOUS		
	VJS4033	CONNECTOR	2	
■E18	VEP84183A	A JACK P.C.BOARD	1	(RTL)
C1,C2	ECUM1H103ZFN	C.CAPACITOR CH 50V 0.01U	2	
C5-C8	ECUM1H103ZFN	C.CAPACITOR CH 50V 0.01U	4	
C11-14	ECUM1H103ZFN	C.CAPACITOR CH 50V 0.01U	4	
J1,J2	VJS3417	CONNECTOR (FEMALE)	2	
J5,J6	VJS3417	CONNECTOR (FEMALE)	2	
J7,J8	VJP3417	CONNECTOR (MALE)	2	
J11-14	VJP3417	CONNECTOR (MALE)	4	
P1	VJP3375A060	CONNECTOR (MALE)	1	
R1	ERJ6GEYG122	M.RESISTOR CH 1/10W 1.2K	1	
R3	ERJ6GEYG122	M.RESISTOR CH 1/10W 1.2K	1	
R5	ERJ6GEYG122	M.RESISTOR CH 1/10W 1.2K	1	
R7	ERJ6GEYG122	M.RESISTOR CH 1/10W 1.2K	1	
R17	ERJ6GEYG122	M.RESISTOR CH 1/10W 1.2K	1	
R19	ERJ6GEYG122	M.RESISTOR CH 1/10W 1.2K	1	
R21	ERJ6GEYG122	M.RESISTOR CH 1/10W 1.2K	1	
R23	ERJ6GEYG122	M.RESISTOR CH 1/10W 1.2K	1	
R25	ERJ6GEYG122	M.RESISTOR CH 1/10W 1.2K	1	
R27	ERJ6GEYG122	M.RESISTOR CH 1/10W 1.2K	1	
R29	ERJ6GEYG122	M.RESISTOR CH 1/10W 1.2K	1	
R31	ERJ6GEYG122	M.RESISTOR CH 1/10W 1.2K	1	
R41	ERJ6GEYG122	M.RESISTOR CH 1/10W 1.2K	1	
R43	ERJ6GEYG122	M.RESISTOR CH 1/10W 1.2K	1	
R45	ERJ6GEYG122	M.RESISTOR CH 1/10W 1.2K	1	
R47	ERJ6GEYG122	M.RESISTOR CH 1/10W 1.2K	1	
R49	ERJ6GEYG122	M.RESISTOR CH 1/10W 1.2K	1	
R51	ERJ6GEYG122	M.RESISTOR CH 1/10W 1.2K	1	
R53	ERJ6GEYG122	M.RESISTOR CH 1/10W 1.2K	1	
R55	ERJ6GEYG122	M.RESISTOR CH 1/10W 1.2K	1	

Ref.No.	Part No.	Part Name & Description	Pcs	Remarks
		MISCELLANEOUS		
	VMP4867	XLR GUIDE ANGLE (A)	1	
	XYN26+F8	SCREW	2	
■E19	VEP84187A	AES/EBU P.C.BOARD	1	(RTL)
J1	VJS3417	CONNECTOR (FEMALE)	1	
J2	VJP3417	CONNECTOR (MALE)	1	
P1	VJP1246T	CONNECTOR (MALE) 6P	1	
■E20	VEP80A76A	UP FRONT 1 P.C.BOARD	1	(RTL)
C1	ECUM1H331JCN	C.CAPACITOR CH 50V 330P	1	
C2-C5	ECUM1E104ZFN	C.CAPACITOR CH 25V 0.1U	4	
C6	ECA1CXS100	E.CAPACITOR 16V 10U	1	
D1-15	LN31GPHL	LED	15	
D16	LN41YPHL	LED	1	
D17	LN81RCPHL	LED	1	
D18	LN31GPHL	LED	1	
D19,20	MA152K	DIODE	2	
D21	LN31GPHL	LED	1	
IC1	MC14050BF	IC	1	
IC2	MC14049UBF	IC	1	
IC3,C4	MC14094BF	IC	2	
P1	VJP1248T	CONNECTOR (MALE) 8P	1	
P2	VJP1246T	CONNECTOR (MALE) 6P	1	
Q1-13	2SD601A-R	TRANSISTOR	13	
R1,R2	ERJ6GEYG682	M.REISITOR CH 1/10W 6.8K	2	
R3,R4	ERJ6GEYG103	M.RESISTOR CH 1/10W 10K	2	
R5,R6	ERJ6GEYG474	M.RESISTOR CH 1/10W 470K	2	
R7	ERJ6GEYG223	M.RESISTOR CH 1/10W 22K	1	
R8	ERJ6GEYG103	M.RESISTOR CH 1/10W 10K	1	
R9	ERJ6GEYG474	M.RESISTOR CH 1/10W 470K	1	
R10	ERJ6GEYF473	M.RESISTOR CH 1/10W 47K	1	
R11	ERJ6GEYG103	M.RESISTOR CH 1/10W 10K	1	
R12	ERJ6GEYF473	M.RESISTOR CH 1/10W 47K	1	
R13,14	ERJ6GEYG181	M.RESISTOR CH 1/10W 180	2	
R15	ERJ6GEYG103	M.RESISTOR CH 1/10W 10K	1	
R16	ERJ6GEYF473	M.RESISTOR CH 1/10W 47K	1	
R17,18	ERJ6GEYG181	M.RESISTOR CH 1/10W 180	2	
R19	ERJ6GEYG103	M.RESISTOR CH 1/10W 10K	1	
R20	ERJ6GEYF473	M.RESISTOR CH 1/10W 47K	1	
R21,22	ERJ6GEYG181	M.RESISTOR CH 1/10W 180	2	
R23	ERJ6GEYG103	M.RESISTOR CH 1/10W 10K	1	
R24	ERJ6GEYF473	M.RESISTOR CH 1/10W 47K	1	
R25,26	ERJ6GEYG181	M.RESISTOR CH 1/10W 180	2	
R27	ERJ6GEYG103	M.RESISTOR CH 1/10W 10K	1	
R28	ERJ6GEYF473	M.RESISTOR CH 1/10W 47K	1	
R29,30	ERJ6GEYG181	M.RESISTOR CH 1/10W 180	2	
R31	ERJ6GEYG103	M.RESISTOR CH 1/10W 10K	1	
R32	ERJ6GEYF473	M.RESISTOR CH 1/10W 47K	1	
R33,34	ERJ6GEYG181	M.RESISTOR CH 1/10W 180	2	
R35,36	ERJ6GEYG103	M.RESISTOR CH 1/10W 10K	2	
R37,38	ERJ6GEYG181	M.RESISTOR CH 1/10W 180	2	
R39	ERJ6GEYG103	M.RESISTOR CH 1/10W 10K	1	
R40	ERJ6GEYF473	M.RESISTOR CH 1/10W 47K	1	
R41	ERJ6GEYG181	M.RESISTOR CH 1/10W 180	1	
R42	ERJ6GEYG103	M.RESISTOR CH 1/10W 10K	1	
R43	ERJ6GEYF473	M.RESISTOR CH 1/10W 47K	1	
R44	ERJ6GEYG181	M.RESISTOR CH 1/10W 180	1	
R45	ERJ6GEYG103	M.RESISTOR CH 1/10W 10K	1	
R46	ERJ6GEYF473	M.RESISTOR CH 1/10W 47K	1	
R47	ERJ6GEYG181	M.RESISTOR CH 1/10W 180	1	
R48,49	ERJ6GEYG103	M.RESISTOR CH 1/10W 10K	2	

Ref.No.	Part No.	Part Name & Description	Pcs	Remarks
R50	ERJ6GEYG181	M.RESISTOR CH 1/10W 180	1	
R51	ERJ6GEYG103	M.RESISTOR CH 1/10W 10K	1	
R52	ERJ6GEYF473	M.RESISTOR CH 1/10W 47K	1	
R53	ERJ6GEYG181	M.RESISTOR CH 1/10W 180	1	
R54	ERJ6GEYG103	M.RESISTOR CH 1/10W 10K	1	
R55	ERJ6GEYF473	M.RESISTOR CH 1/10W 47K	1	
R56-58	ERJ6GEYG181	M.RESISTOR CH 1/10W 180	3	
SW1	EVQQS205K	SWITCH	1	
SW2	EVQQS307K	SWITCH	1	
		MISCELLANEOUS		
	VGQ2507	LED SPACER	19	
■E21	VEP80852A	UP FRONT 2 P.C.BOARD	1	(RTL)
D1	VLL0029	LED	1	
P1	VJP1246T	CONNECTOR (MALE) 6P	1	
SW1	VSP0864C001	SWITCH	1	
■E22	VEP86263B	FRONT CPU P.C.BOARD	1	(RTL)
C1	ECUM1H103KBN	C.CAPACITOR CH 50V 0.01U	1	
C2	ECEV1HV2R2Q	E.CAPACITOR CH 50V 2.2U	1	
C3	ECUM1H103KBN	C.CAPACITOR CH 50V 0.01U	1	
C4,C5	ECUM1H100DCN	C.CAPACITOR CH 50V 10P	2	
C6	ECUM1E104ZFN	C.CAPACITOR CH 25V 0.1U	1	
C7-14	ECUM1H103KBN	C.CAPACITOR CH 50V 0.01U	8	
C15	ECUM1E104ZFN	C.CAPACITOR CH 25V 0.1U	1	
C16,17	ECUM1H103KBN	C.CAPACITOR CH 50V 0.01U	2	
C20,21	ECEV1CV470Q	E.CAPACITOR CH 16V 47U	2	
C22-25	ECUX1E104KBN	C.CAPACITOR CH 25V 0.1U	4	
C26,27	ECEV1CV470Q	E.CAPACITOR CH 16V 47U	2	
C28-37	ECUM1H103KBN	C.CAPACITOR CH 50V 0.01U	10	
C38,39	ECEV1CV470Q	E.CAPACITOR CH 16V 47U	2	
C40-42	ECUM1E104ZFN	C.CAPACITOR CH 25V 0.1U	3	
C43-47	ECUM1H103KBN	C.CAPACITOR CH 50V 0.01U	5	
C48-51	ECUM1E104ZFN	C.CAPACITOR CH 25V 0.1U	4	
C52-69	ECUM1H103KBN	C.CAPACITOR CH 50V 0.01U	18	
C70	ERJ6GEY0R00	M.RESISTOR CH 1/10W 0	1	
C71	ECUM1H103KBN	C.CAPACITOR CH 50V 0.01U	1	
C72	ERJ6GEY0R00	M.RESISTOR CH 1/10W 0	1	
C73-75	ECUM1H103KBN	C.CAPACITOR CH 50V 0.01U	3	
C76	ERJ6GEY0R00	M.RESISTOR CH 1/10W 0	1	
C77,78	ECUM1H103KBN	C.CAPACITOR CH 50V 0.01U	2	
C79	ERJ6GEY0R00	M.RESISTOR CH 1/10W 0	1	
C80-82	ECUM1H103KBN	C.CAPACITOR CH 50V 0.01U	3	
C84-86	ECUM1H221JCN	C.CAPACITOR CH 50V 220P	3	
C88,89	ECUM1H103KBN	C.CAPACITOR CH 50V 0.01U	2	
D1-D8	MA152WK	DIODE	8	
DP1	VEQ1847	DISPLAY TUBE	1	
FL1-L4	VLF1016A470	FILTER	4	
IC1	HD64180ZRP10	IC	1	
IC2	VSI2687	IC	1	
IC3	K6256DLG7L	IC	1	
IC4	TL7705CPSB	IC	1	
IC5	74F32SJ	IC	1	
IC6	MC74HC161AF	IC	1	
IC13	MC74HC04AF	IC	1	
IC14	TE7751	IC	1	
IC15	MC74HC138AF	IC	1	
IC16	MC74HC32AF	IC	1	
IC17	SN75C1168NS	IC	1	
IC18	MC74HC4538AF	IC	1	

Ref.No.	Part No.	Part Name & Description	Pcs	Remarks
IC20,21	NJM78L05UA	IC	2	
IC22	MC14015BF	IC	1	
IC23	UPC339G2	IC	1	
IC24	MC74HC04AF	IC	1	
IC25	MC74HC11F	IC	1	
IC26	MC14013BF	IC	1	
IC27	UPD71055GB	IC	1	
IC28,29	MC14516BF	IC	2	
IC30	TLC549IPS	IC	1	
IC31	MC74HC4051F	IC	1	
IC32	TLC549IPS	IC	1	
IC33	MC74HC4051F	IC	1	
IC34-41	NJM2904M	IC	8	
IC42	MC74HC11F	IC	1	
IC43	MC74HC32AF	IC	1	
IS2	VJS2336A032	CONNECTOR (FEMALE)	1	
L1,L2	VLP0133	COIL	2	
P1,P2	VJP1942T	CONNECTOR (MALE)	2	
P3,P4	VJP3440A016	CONNECTOR (MALE)	2	
P5	VJP2891A016	CONNECTOR (MALE)	1	
P6	VJS3281A020	CONNECTOR (FEMALE)	1	
P7	VJS2698A028	CONNECTOR (FEMALE)	1	
P8	VJP1233T	CONNECTOR (MALE) 6P	1	
R1	ERJ6GEYG222	M.RESISTOR CH 1/10W 2.2K	1	
R2-R7	ERJ6GEYF473	M.RESISTOR CH 1/10W 47K	6	
R8-15	ERJ6GEYG103	M.RESISTOR CH 1/10W 10K	8	
R16	ERJ6GEYG222	M.RESISTOR CH 1/10W 2.2K	1	
R17	ERJ6GEYG181	M.RESISTOR CH 1/10W 180	1	
R18,19	ERJ6GEYG103	M.RESISTOR CH 1/10W 10K	2	
R20	ERJ6GEYF473	M.RESISTOR CH 1/10W 47K	1	
R21-36	ERJ6GEYG103	M.RESISTOR CH 1/10W 10K	16	
R37-41	ERJ6GEYF473	M.RESISTOR CH 1/10W 47K	5	
R42,43	ERJ6GEYF472	M.RESISTOR CH 1/10W 4.7K	2	
R44	ERJ6GEYG101	M.RESISTOR CH 1/10W 100	1	
R45-47	ERJ6GEYF472	M.RESISTOR CH 1/10W 4.7K	3	
R48	ERJ6GEYG102	M.RESISTOR CH 1/10W 1K	1	
R49,50	ERJ6GEYF472	M.RESISTOR CH 1/10W 4.7K	2	
R51-54	ERJ6GEYG563	M.RESISTOR CH 1/10W 56K	4	
R55-58	ERJ6GEYG103	M.RESISTOR CH 1/10W 10K	4	
R59-63	ERJ6GEYF472	M.RESISTOR CH 1/10W 4.7K	5	
R64	ERJ6GEYG103	M.RESISTOR CH 1/10W 10K	1	
R65-69	ERJ6GEYF472	M.RESISTOR CH 1/10W 4.7K	5	
R70-98	ERJ6GEYG103	M.RESISTOR CH 1/10W 10K	29	
R99,00	ERJ6GEY0R00	M.RESISTOR CH 1/10W 0	2	
R101-04	ERJ6GEYG392	M.RESISTOR CH 1/10W 3.9K	4	
R105-07	ERJ6GEY0R00	M.RESISTOR CH 1/10W 0	3	
R128,29	ERJ6GEY0R00	M.RESISTOR CH 1/10W 0	2	
R131-56	ERJ6GEYG103	M.RESISTOR CH 1/10W 10K	26	
R157	ERJ6GEY0R00	M.RESISTOR CH 1/10W 0	1	
R158-65	ERJ6GEYG102	M.RESISTOR CH 1/10W 1K	8	
R200,01	ERDS2TJ121	C.RESISTOR 1/4W 120	2	
SW1	VSS0184	SWITCH	1	
X1	VSX0641	CRYSTAL OSCILLATOR	1	
		MISCELLANEOUS		
	VMX2507	SPACER	2	
	XYN3+K8	SCREW	2	
■E23	VEP86148A	FRONT CPU SUB P.C.BOARD	1	(RTL)
P1	VJS3406B028	CONNECTOR (FEMALE)	1	
R2-R5	ERJ6GEYG101	M.RESISTOR CH 1/10W 100	4	
SW1-10	VSS0391	SWITCH	10	
SW11-13	VSP1013	SWITCH	3	

Ref.No.	Part No.	Part Name & Description	Pcs	Remarks
VR2-R5	VRV0273	V.RESISTOR	4	
■E24	VEP80A49B	FRONT SW P.C.BOARD	1	(RTL)
C1	ECUM1E104ZFN	C.CAPACITOR CH 25V 0.1U	1	
C4,C5	ECUM1H103KBN	C.CAPACITOR CH 50V 0.01U	2	
C7-11	ECUM1H103KBN	C.CAPACITOR CH 50V 0.01U	5	
C13	ECEA0JGE102	E.CAPACITOR 6.3V 1000U	1	
C14	ECUM1H103KBN	C.CAPACITOR CH 50V 0.01U	1	
C16	ECEV1HV4R7Q	E.CAPACITOR CH 50V 4.7U	1	
C17	ECUX1H333KBN	C.CAPACITOR CH 50V 0.033U	1	
C18	ECUM1H103KBN	C.CAPACITOR CH 50V 0.01U	1	
C19	ECEA1AGE331	E.CAPACITOR 10V 330U	1	
C20	ECEA1HGE470	E.CAPACITOR 50V 47U	1	
C30,31	ECUM1H103KBN	C.CAPACITOR CH 50V 0.01U	2	
D2-D5	LN38GCPP	LED	4	
D6	LN28RCPP	LED	1	
D7	LN38GCPP	LED	1	
D8	LN48YCPP	LED	1	
D9	LN38GCPP	LED	1	
D10	LN48YCPP	LED	1	
D12	LN48YCPP	LED	1	
D13-16	LN38GCPP	LED	4	
D17-25	MA152WA	DIODE	9	
D26,27	MA152A	DIODE	2	
D28-38	MA152WA	DIODE	11	
D39	MA152A	DIODE	1	
D40	MA152WA	DIODE	1	
D44	MA4300	DIODE	1	
D45	MA166	DIODE	1	
D46	MA701A	DIODE	1	
D47	MA4030M	DIODE	1	
DP1	VSL0462	DISPLAY TUBE	1	
F1	EYP2BN135	FUSE	1	
IC1	UPD71055GB	IC	1	
IC2,C3	MC74HC138AF	IC	2	
IC5-C9	MC74HC273AF	IC	5	
IC11	UPD16310GF	IC	1	
P1,P2	VJP1986T	CONNECTOR (MALE)	2	
Q45,46	2SC1815Y	TRANSISTOR	2	
Q47	2SC3074Y	TRANSISTOR	1	
Q48-53	2SB709A-R	TRANSISTOR	6	
QR1-40	UN2214	TRANSISTOR-RESISTOR	40	
R4-11	ERJ6GEYG181	M.RESISTOR CH 1/10W 180	8	
R12-14	ERJ6GEYG221	M.RESISTOR CH 1/10W 220	3	
R15-19	ERJ6GEYG181	M.RESISTOR CH 1/10W 180	5	
R20-26	ERJ6GEYG221	M.RESISTOR CH 1/10W 220	7	
R27-29	ERJ6GEYG181	M.RESISTOR CH 1/10W 180	3	
R30-34	ERJ6GEYG221	M.RESISTOR CH 1/10W 220	5	
R35-42	ERJ6GEYG181	M.RESISTOR CH 1/10W 180	8	
R43-50	ERJ6GEYF472	M.RESISTOR CH 1/10W 4.7K	8	
R51-53	ERJ6GEY0R00	M.RESISTOR CH 1/10W 0	3	
R110	ERJ6GEYG103	M.RESISTOR CH 1/10W 10K	1	
R111	ERDS2TJ682	C.RESISTOR 1/4W 6.8K	1	
R112	ERDS2TJ101	C.RESISTOR 1/4W 100	1	
R113	ERDS2TJ221	C.RESISTOR 1/4W 220	1	
R114	ERDS2TJ220	C.RESISTOR 1/4W 22	1	
R115	ERJ8GCYJ103	M.RESISTOR CH 1/8W 10K	1	
R120	ERJ6GEYF473	M.RESISTOR CH 1/10W 47K	1	
R121-28	ERJ6GEYG103	M.RESISTOR CH 1/10W 10K	8	
R129-40	ERJ6GEYG223	M.RESISTOR CH 1/10W 22K	12	
R141	ERJ6GEYG181	M.RESISTOR CH 1/10W 180	1	
R142	ERJ6GEYF472	M.RESISTOR CH 1/10W 4.7K	1	
R143-45	ERJ6GEYG103	M.RESISTOR CH 1/10W 10K	3	

Ref.No.	Part No.	Part Name & Description	Pcs	Remarks
SW1	VSP0791	SWITCH	1	
SW2	VSP0788	SWITCH	1	
SW3	VSP0792	SWITCH	1	
SW4	VSP0789	SWITCH	1	
SW5	VSP0790	SWITCH	1	
SW6,W7	VSP0795	SWITCH	2	
SW8-10	VSP0864A000	SWITCH	3	
SW11,12	VSP0795	SWITCH	2	
SW13	VSP0998	SWITCH	1	
SW14	VSP0864A039	SWITCH	1	
SW15	VSP0999A001	SWITCH	1	
SW16	VSP0864A038	SWITCH	1	
SW18	VSP0853A000	SWITCH	1	
SW20-24	VSP0853A000	SWITCH	5	
SW25	VSP0997A002	SWITCH	1	
SW26	VSP0997A001	SWITCH	1	
SW27-31	VSS0226	SWITCH	5	
SW32	VSP1005	SWITCH	1	
SW34	VSP1005	SWITCH	1	
SW36-41	VSP1005	SWITCH	6	
SW42	VSP0864A048	SWITCH	1	
SW43	VSP0864A049	SWITCH	1	
TR1	VLT0869	TRANSFORMER	1	
		MISCELLANEOUS		
	VJF1258	HOLDER	1	
	VMX2147	SPACER	14	
■E25	VEP80963C	FRONT VR 1 P.C.BOARD	1	(RTL)
P1	VJP3440A016	CONNECTOR (MALE)	1	
R1,R2	ERDS2TJ101	C.RESISTOR 1/4W 100	2	
R4,R5	ERDS2TJ101	C.RESISTOR 1/4W 100	2	
R6	ERDS2TJ220	C.RESISTOR 1/4W 22	1	
VR1,R2	EVU023003B14	V.RESISTOR 10K	2	
VR4,R5	EVU023003B14	V.RESISTOR 10K	2	
VR6	EWVBB6018B14	V.RESISTOR 10K	1	
		MISCELLANEOUS		
	VEE8380	FRONT VR1 CABLE	1	
■E26	VEP80964C	FRONT VR 2 P.C.BOARD	1	(RTL)
FL1-L3	VLF1356	FILTER	3	
J1	VJJ0378	M6 JACK	1	
P1	VJP3440A016	CONNECTOR (MALE)	1	
R1,R2	ERDS2TJ101	C.RESISTOR 1/4W 100	2	
R4	ERDS2TJ101	C.RESISTOR 1/4W 100	1	
VR1,R2	EVU023006B14	V.RESISTOR 10K	2	
VR4	EVU023006B14	V.RESISTOR 10K	1	
		MISCELLANEOUS		
	VEE9639	FRONT VR CABLE	1	
	VEE4187	EARTH LUG	1	
	VMC1321	EARTH METAL	1	

Ref.No.	Part No.	Part Name & Description	Pcs	Remarks
■E27	VEP82216B	MECHA I/F P.C.BOARD	1	(RTL)
C1	ECUX1H561JCV	C.CAPACITOR CH 50V 560P	1	
C2-C5	ECUX1H103KBV	C.CAPACITOR CH 50V 0.01U	4	
C6	ECEV1CV220Q	E.CAPACITOR CH 16V 22U	1	
C7	ECUX1H103KBV	C.CAPACITOR CH 50V 0.01U	1	
C8	ECEV1CV470Q	E.CAPACITOR CH 16V 47U	1	
C9,10	ECUX1E104ZFV	C.CAPACITOR CH 25V 0.1U	2	
C11	ECUX1H103KBV	C.CAPACITOR CH 50V 0.01U	1	
C12	ECUX1E104ZFV	C.CAPACITOR CH 25V 0.1U	1	
C13,14	ECEV1CV470Q	E.CAPACITOR CH 16V 47U	2	
C15	ECUX1H103KBV	C.CAPACITOR CH 50V 0.01U	1	
C20	ECUX1H103KBV	C.CAPACITOR CH 50V 0.01U	1	
C21	ECUX1E104ZFV	C.CAPACITOR CH 25V 0.1U	1	
C22	ECUX1H103KBV	C.CAPACITOR CH 50V 0.01U	1	
C23	ECUX1E104ZFV	C.CAPACITOR CH 25V 0.1U	1	
C100	ECUX1E104ZFV	C.CAPACITOR CH 25V 0.1U	1	
C101	ECEV1CV470Q	E.CAPACITOR CH 16V 47U	1	
C102	ECA1HEN101	E.CAPACITOR 50V 100U	1	
C103	ECUX1H103KBV	C.CAPACITOR CH 50V 0.01U	1	
C104	ECEV1CV100Q	E.CAPACITOR CH 16V 10U	1	
C200-02	ECUX1H101JCV	C.CAPACITOR CH 50V 100P	3	
D1	MA157	DIODE	1	
D100-02	MA738	DIODE	3	
IC1,C2	0P177GS	IC	2	
IC3	NJM4580ED	IC	1	
IC4-C6	UPC4558G2	IC	3	
IC10	NJM78L09UA	IC	1	
IC11	NJM79L09UA	IC	1	
IC100	MC14538BF	IC	1	
L1,L2	VLF1016A470	FILTER	2	
L100	VLP0133	COIL	1	
P1	VJP2891A030	CONNECTOR (MALE)	1	
P2	VJP3418A080	CONNECTOR (MALE)	1	
P11	VJP3172D002	CONNECTOR (MALE)	1	
P12	VJP3172D005	CONNECTOR (MALE)	1	
P13	VJP3172D002	CONNECTOR (MALE)	1	
P14	VJP3172D003	CONNECTOR (MALE)	1	
P15	VJP3518B002	CONNECTOR (MALE)	1	
P16	VJP3518B003	CONNECTOR (MALE)	1	
P17	VJS3801B010	CONNECTOR (FEMALE)	1	
P18	VJP3518B002	CONNECTOR (MALE)	1	
P19	VJP3172D002	CONNECTOR (MALE)	1	
P20	VJP3518B003	CONNECTOR (MALE)	1	
P21	VJP3518B002	CONNECTOR (MALE)	1	
P22	VJP3172D004	CONNECTOR (MALE)	1	
P24	VJP3518B002	CONNECTOR (MALE)	1	
P25	VJP1230T	CONNECTOR (MALE) 3P	1	
P26	VJP1236T	CONNECTOR (MALE) 9P	1	
P30	VJP3172D003	CONNECTOR (MALE)	1	
P32	VJP3172D004	CONNECTOR (MALE)	1	
P33	VJS3406B015	CONNECTOR (FEMALE)	1	
P34,35	VJS2889A017	CONNECTOR (FEMALE)	2	
P36	VJS3406B019	CONNECTOR (FEMALE)	1	
P41	VJP3172D002	CONNECTOR (MALE)	1	
P48	VJP3125B002	CONNECTOR (MALE)	1	
Q1	2SB1218A-R	TRANSISTOR	1	
Q100,01	2SB766-R	TRANSISTOR	2	
QR100,01	UN2214	TRANSISTOR-RESISTOR	2	
R1	ERJ3GEYJ821	M.RESISTOR CH 1/16W 820	1	
R2,R3	ERJ3GEYJ562	M.RESISTOR CH 1/16W 5.6K	2	
R4	ERJ3RBD562	M.RESISTOR CH 1/16W 5.6K	1	
R5	ERJ3RBD473	M.RESISTOR CH 1/16W 47K	1	
R6	ERJ3RBD562	M.RESISTOR CH 1/16W 5.6K	1	
R7	ERJ3GEYJ562	M.RESISTOR CH 1/16W 5.6K	1	
R8	ERJ3RBD333	M.RESISTOR CH 1/16W 33K	1	
R9	ERJ3GEYJ562	M.RESISTOR CH 1/16W 5.6K	1	
R10	ERJ3RBD562	M.RESISTOR CH 1/16W 5.6K	1	
R11	ERJ3RBD473	M.RESISTOR CH 1/16W 47K	1	
R12,13	ERJ6RBD103	M.RESISTOR CH 1/10W 10K	2	

Ref.No.	Part No.	Part Name & Description	Pcs	Remarks
R14	ERJ6RBD104	M.RESISTOR CH 1/10W 100K	1	
R15	ERJ6RBD823	M.RESISTOR CH 1/10W 82K	1	
R16	ERJ6RBD273	M.RESISTOR CH 1/10W 27K	1	
R17	ERJ3GEYJ273	M.RESISTOR CH 1/16W 27K	1	
R18	ERJ6RBD392	M.RESISTOR CH 1/10W 3.9K	1	
R19	ERJ6RBD103	M.RESISTOR CH 1/10W 10K	1	
R20	ERJ3GEYG102	M.RESISTOR CH 1/16W 1K	1	
R21	ERJ6RBD183	M.RESISTOR CH 1/10W 18K	1	
R22	ERJ6RBD473	M.RESISTOR CH 1/10W 47K	1	
R23	ERJ6RBD682	M.RESISTOR CH 1/10W 6.8K	1	
R24	ERJ6RBD222	M.RESISTOR CH 1/10W 2.2K	1	
R25	ERJ6RBD391	M.RESISTOR CH 1/10W 390	1	
R36,37	ERJ3GEY0R00	M.RESISTOR CH 1/16W 0	2	
R100	ERJ3GEYJ223	M.RESISTOR CH 1/16W 22K	1	
R101	ERJ8GCYJ102	M.RESISTOR CH 1/8W 1K	1	
R102	ERJ6GEYG102	M.RESISTOR CH 1/10W 1K	1	
R103	ERJ3GEYJ334	M.RESISTOR CH 1/16W 330K	1	
R104	ERJ3GEYJ223	M.RESISTOR CH 1/16W 22K	1	
R105	ERJ8GCYJ102	M.RESISTOR CH 1/8W 1K	1	
R200	ERJ6GEYG752	M.RESISTOR CH 1/10W 7.5K	1	
R201	ERJ6GEYG242	M.RESISTOR CH 1/10W 2.4K	1	
R202	ERJ6GEYG821	M.RESISTOR CH 1/10W 820	1	
R203	ERJ6GEYG752	M.RESISTOR CH 1/10W 7.5K	1	
R204	ERJ6GEYG242	M.RESISTOR CH 1/10W 2.4K	1	
R205	ERJ6GEYG821	M.RESISTOR CH 1/10W 820	1	
SW200	VSS023706	SWITCH	1	
VR1	EVMEGSA00B24	V.RESISTOR 20K	1	
VR2	EVMEGSA00B54	V.RESISTOR 50K	1	
■E28	VEP80856A	CARRIGE P.C.BOARD	1	(RTL)
P1	VJP1249T	CONNECTOR (MALE) 9P	1	
P2	VJS2889A012	CONNECTOR (FEMALE)	1	
P3	VJS2889A016	CONNECTOR (FEMALE)	1	
R1-R7	ERDS2TJ221	C.RESISTOR 1/4W 220	7	

⚠警告 ⚠ 印の部品は安全上重要な部品です。交換するときは、安全及び性能維持のため必ず指定の部品をご使用ください。

[- - - -] 内は充電部です。AC100Vが加わっておりますので点検、修理のときは感電しないよう充分ご注意ください。

IMPORTANT SAFETY NOTICE:
COMPONENTS IDENTIFIED WITH THE MARK ⚠ HAVE THE SPECIAL CHARACTERISTICS FOR SAFETY.
WHEN REPLACING ANY OF THESE COMPONENTS. USE ONLY THE SAME TYPE.

CAUTION

THE [- - - -] MARK INDICATES THE PRIMARY CIRCUIT TO DISTINGUISH THE PRIMARY FROM THE SECONDARY CIRCUIT.
PAY ATTENTION NOT TO RECEIVE AN ELECTRIC SHOCK DURING REPAIRAND SERVICE OF THE PRODUCTS.

P1101 VJP2638: COLD 1, HOT 4
P1102 VJP2639: HOT_SW_IN 1, HOT_SW_OUT 4
P1103 VJP2639: COLD_SW_OUT 1, COLD_SW_IN 4
OPTION/VJW0023=10
Fusel_5A
AC_inlet VJP0083-1
TO_chassis
＊AC_SW
C1101 0.22
R1101 330K
ELF18D850C L1101
C1105 100P
C1106 100P
ELF18D604F L1102
ELF18D604F L1103
C1104 0.47
J1101
C1102 470P
C1103 470P
C1107 1500P
C1108 1500P
C1109 1000P
D1101 RBV606
C1112 VCK0293 3.3μ (450V)
VLQ0820 L1105
WITH HEATSYNK
22 (2W) R1105
C1115 470P (2KV)
C1116 470P (2KV)
D1104 FML-36S
2SK1941-01R Q1101
2SK1941-01R Q1102
C1119 470P (2KV)
C1120 470P (2KV)
R1106 22 (2W) VRE0206
R1107 50mΩ (2W) VRE0206
C1117 450V150 (HB)
C1118 450V150 (HB)
IC1103 M51953BL
P1 P2 P3 P4 P5
1 2 3 4 5
R1148 150K (1/2W)
R1149 150K (1/2W)
R1150 150K (1/2W)
R1165 27K/J6
R1121 PAT
R1151 22K/J6
C1122 50V10 (NXL)
C1111 0.1/ZFN
R1152 PAT
R1164 PAT
R1166 1000/J6
ERU5TEK100 R1103
ERU5TEK100 R1102
D1102
C1110 0.1/ZFN
R1104 10K/J6
R1147 470 (2W)
R1116 220/J6
D1106 ERA15-08
R1115 220/J6
D1105 ERA15-08
TM1661S-L
WITH HEATSYNK
U1GU44 D1103
R1110 10 (1/4W)
R1108 10 (1/4W)
R1153 47K (1/2W)
R1113 47K (1/2W)
R1154 47K (1/2W)
R1122 47K (1/2W)
R1123 470K (1/4W)
10 (1/4W) R1112
U1GU44 D1112
R1111 22 (1/4W)
D1113 U1GU44
R1109 22 (1/4W)
D1111 U1GU44
R1114 12K/J6
R1117 33K (3W)
R1118 33K (3W)
IC1102 M51945BL
P1 P2 P3 P4 P5
1 2 3 4 5
R1129 470K (1/4W)
R1125 0
R1126 PAT
R1127 0
MA151K-TW D1110
IC1101 VCC OUT GND ZCD FB Comp MP C_Sense MC33262P
C1128 50V100 (FQ)
R1132 47/J6
R1134 220K (1/4W)
R1135 220K (1/4W)
R1136 150K (1/4W)
R1138 470/J6
C1131 2200P (630V)
R1139 150K (1/2W)
R1140 150K (1/2W)
R1141 150K (1/2W)
R1143 220K (1/2W)
R1144 220K (1/2W)
R1145 10K/J6
VJP4033 P1104
6 DC+
5 DC-
4 Main_S_Down_H
3 AF_RESET_L
2 AF_S_Down_H
1 Inrush_Trigger
C1121 50V10 (XLV)
MA3200-MTX D1107
MA3200-MTX D1108
R1119 27K/J6
R1120 18K/J6
R1158 0
R1160 220K/J6
R1163 470K/J6
R1161 100K/J6
R1162 330K/J6
Q1104 PAT
R1124 PAT
C1123 PAT
Q1105 UN2213
R1128 PAT
C1124 0.47/ZFM
C1125 0.47/ZFM
R1130 5600/J6
C1126 1000P/UBN
C1127 0.68 (V)
C1129 0.01/UBN
R1131 220/J6
D1114 MA3068-MTX
D1115 MA3068-MTX
R1137 10K/J6
C1130 0.1/ZFN
VR1102 CW 500/VR2
R1159
R1142 2700/J6
C1134 4700P/UBN
R1156 10K/J6
C1132 0.1/ZFN
R1146 VRT0142
D1116 MA3200-MTX
D1117 MA151K-TW
R1157 PAT
C1133 0.1/ZFN
WITH HEATSYNK

Ref. No.	NTSC	PAL
Fuse1	XBA1C50NB5	XBA2C50TH15

COMPONENT NAME	POWER 1	01/01
CIRCUIT BOARD NO.	MODEL NO.	
VEP81183A		
		SCM212

⚠警告 ⚠ 印の部品は安全上重要な部品です。交換するときは、安全及び性能維持のため必ず指定の部品をご使用ください。

IMPORTANT SAFETY NOTICE:
COMPONENTS IDENTIFIED WITH THE MARK ⚠ HAVE THE SPECIAL CHARACTERISTICS FOR SAFETY.
WHEN REPLACING ANY OF THESE COMPONENTS. USE ONLY THE SAME TYPE.

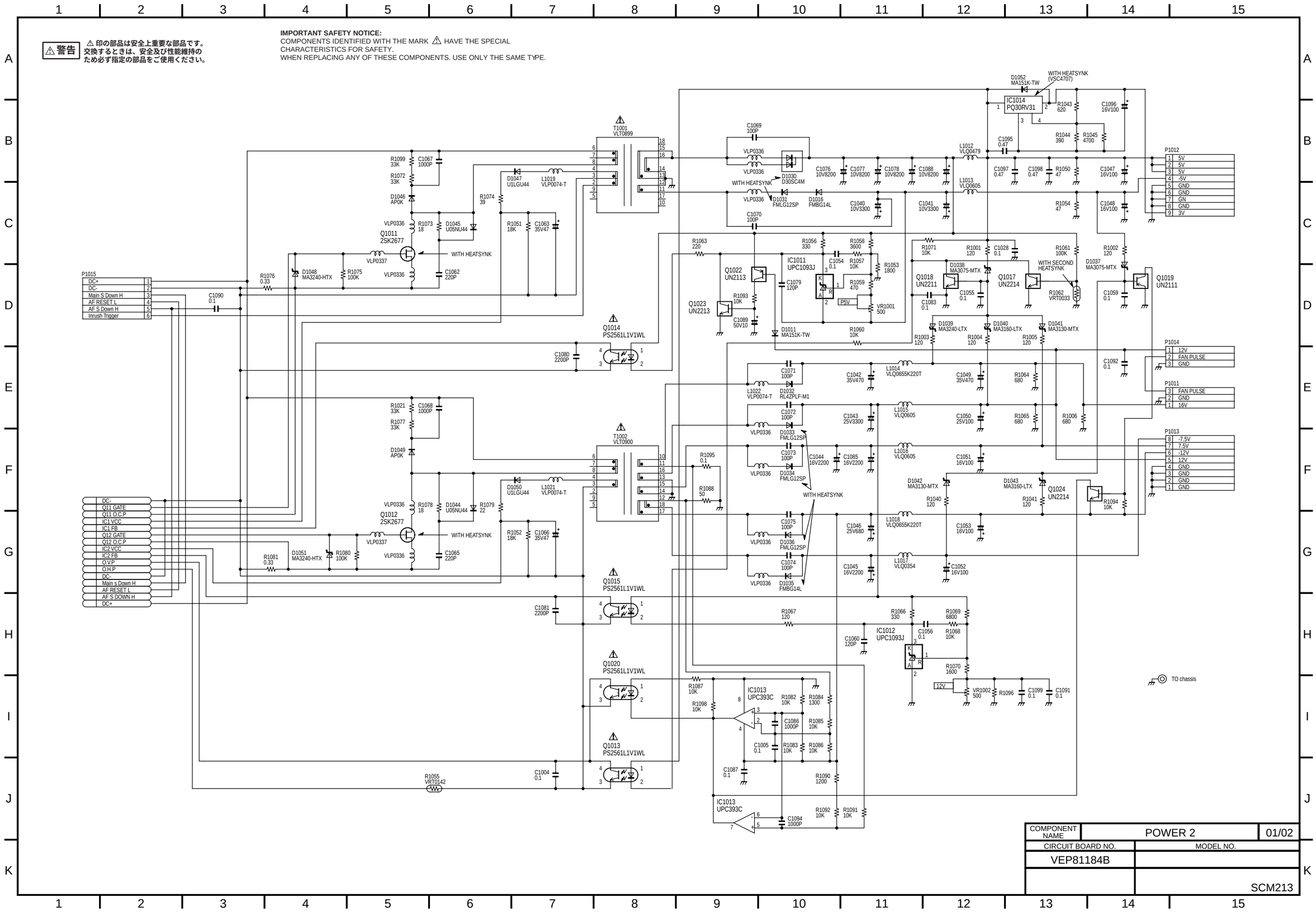

COMPONENT NAME	POWER 2	01/02
CIRCUIT BOARD NO.	MODEL NO.	
VEP81184B		
		SCM213

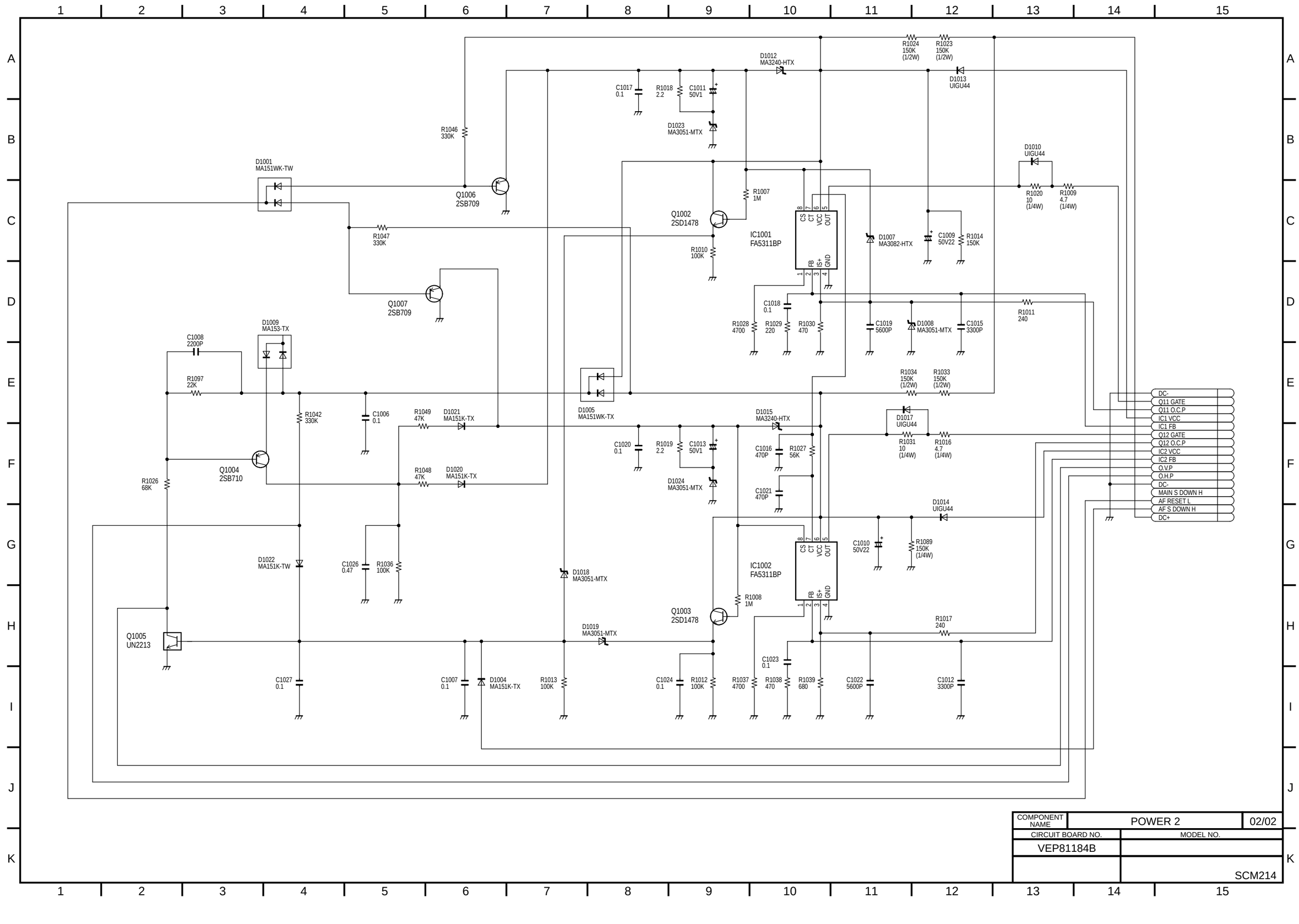

COMPONENT NAME	POWER 2	02/02
CIRCUIT BOARD NO.	MODEL NO.	
VEP81184B		
		SCM214

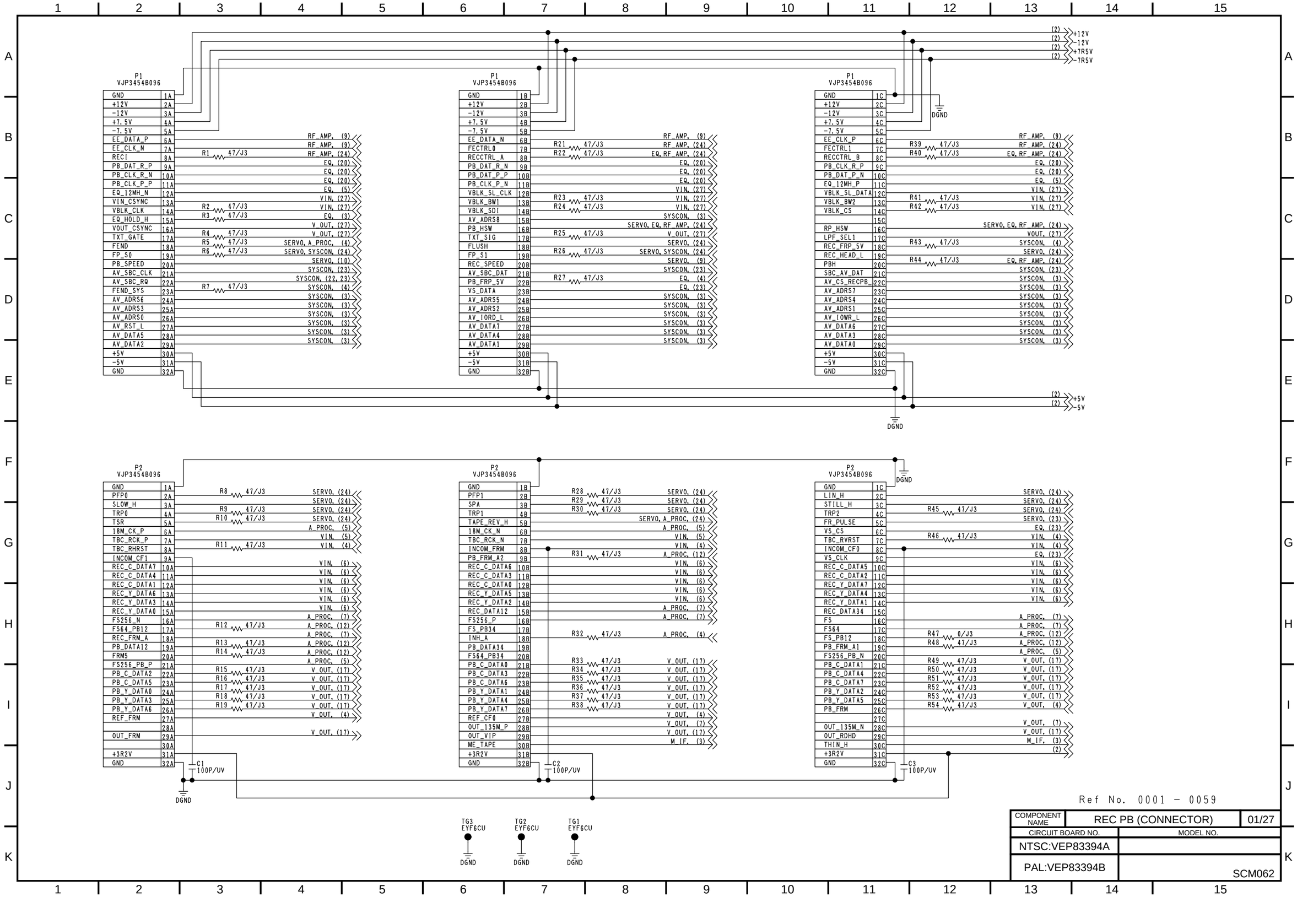

Ref No. 0001 – 0059

COMPONENT NAME	REC PB (CONNECTOR)	01/27
CIRCUIT BOARD NO.	MODEL NO.	
NTSC:VEP83394A		
PAL:VEP83394B		SCM062

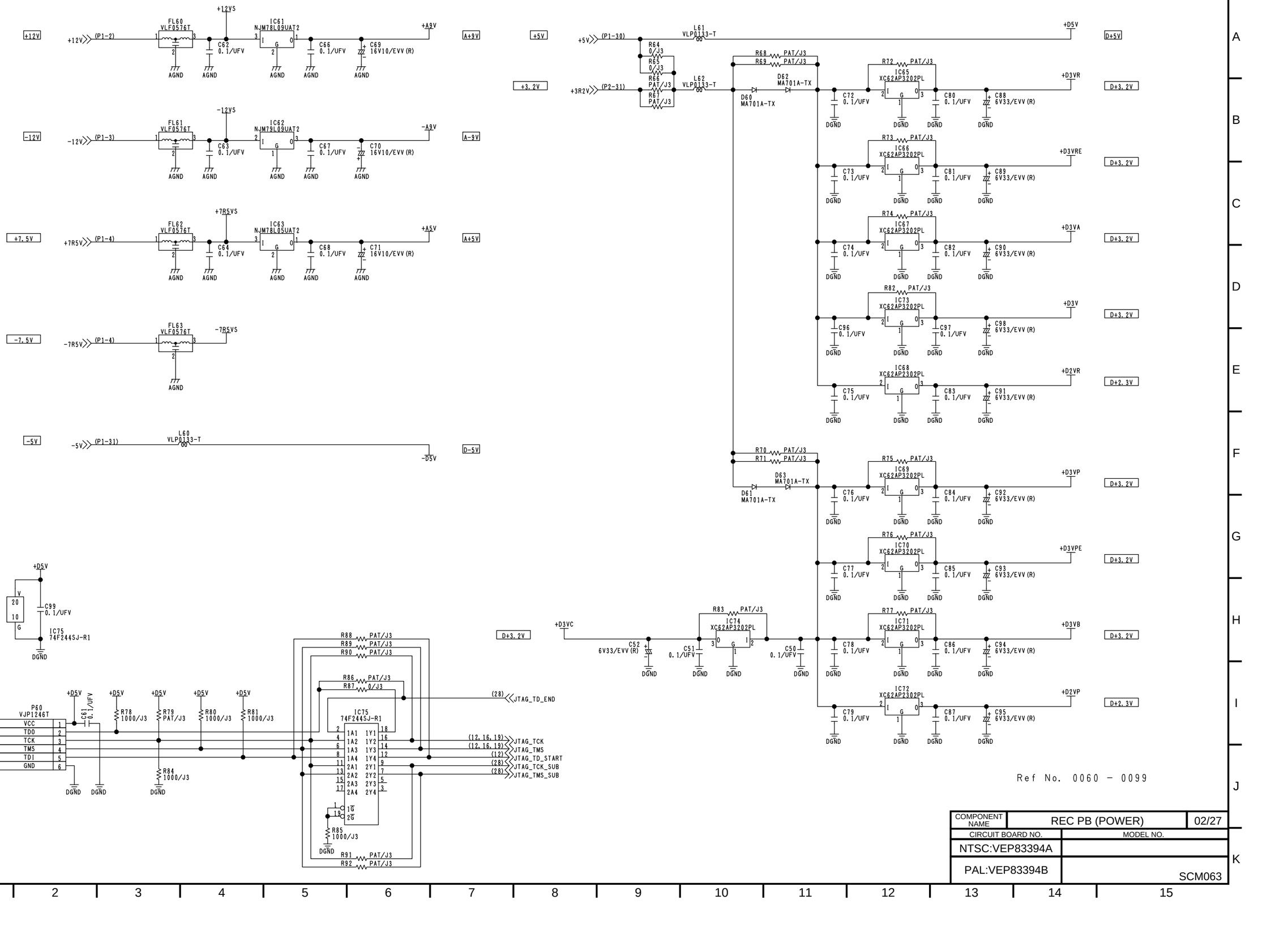

COMPONENT NAME	REC PB (POWER)	02/27
CIRCUIT BOARD NO.	MODEL NO.	
NTSC:VEP83394A		
PAL:VEP83394B		SCM063

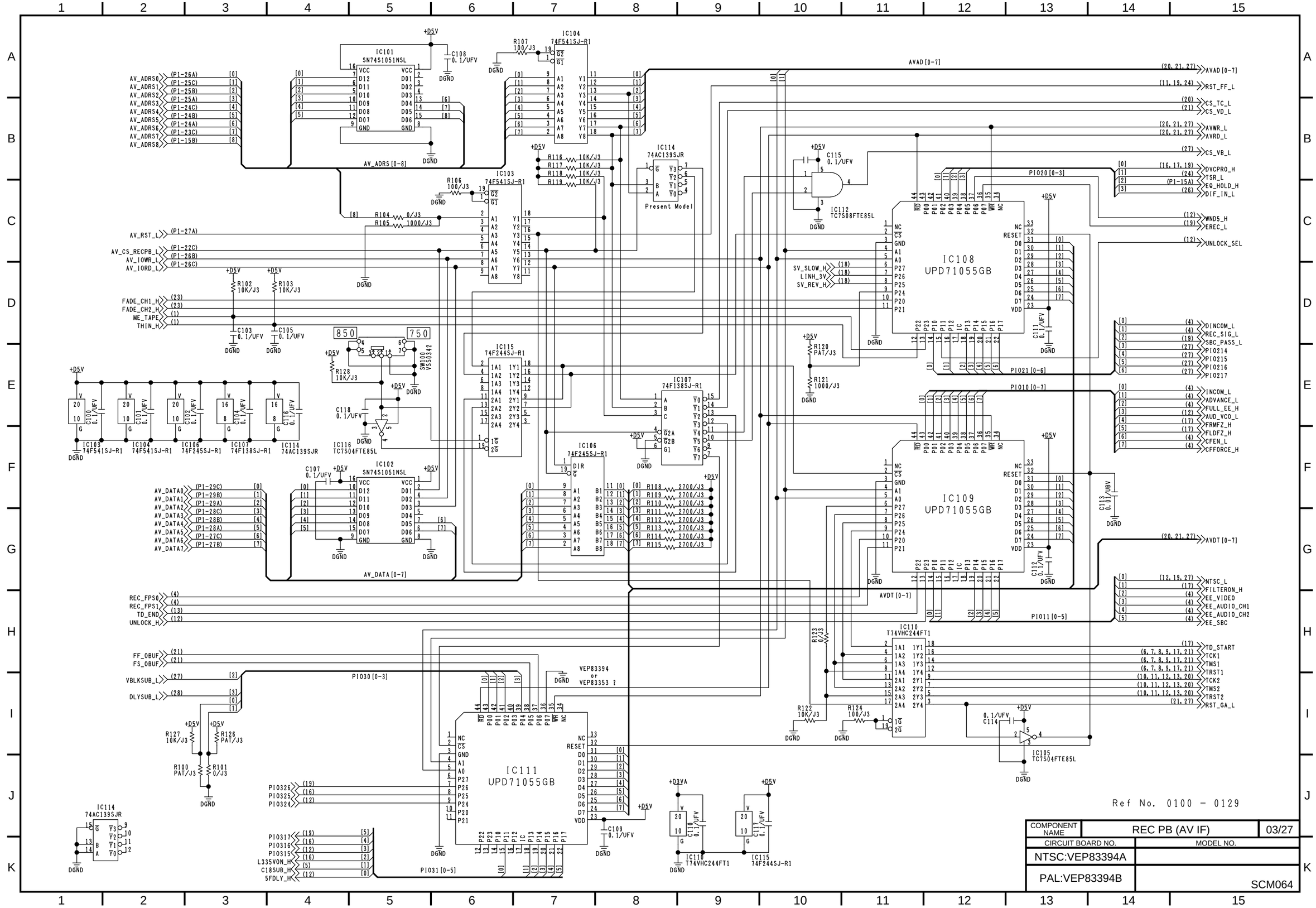
IC101 SN74S1051NSL
IC102 SN74S1051NSL
IC103 74F541SJ-R1
IC104 74F541SJ-R1
IC105 TC7S04FTE85L
IC106 74F245SJ-R1
IC107 74F138SJ-R1
IC108 UPD71055GB
IC109 UPD71055GB
IC110 T74VHC244FT1
IC111 UPD71055GB
IC112 TC7S08FTE85L
IC114 74AC139SJR
IC115 74F244SJ-R1
IC116 TC7S04FTE85L
Present Model
VEP83394 or VEP83353 ?
AV_ADRS[0-8]
AV_DATA[0-7]
AVAD[0-7]
AVDT[0-7]
PIO10[0-7]
PIO20[0-3]
PIO21[0-6]
PIO30[0-3]
PIO31[0-5]
PIO11[0-5]
SW100 VSS0342
Ref No. 0100 - 0129
COMPONENT NAME
REC PB (AV IF)
03/27
CIRCUIT BOARD NO.
MODEL NO.
NTSC:VEP83394A
PAL:VEP83394B
SCM064

IC131
UPD65841G025

MPL/BUS_SEL

	NTSC	PAL
R150	PAT/J3	0/J3
R151	0/J3	PAT/J3

	NTSC	PAL
R148	PAT/J3	10K/J3
R149	0/J3	PAT/J3

IC544 T74VHC32FTP1 (sheet14)

IC130 TCVHC153FEL

IC132 T74VHCT244F1

IC133 T74VHCT244F1

Ref No. 0130 - 0169

COMPONENT NAME	REC PB (MPL/BUS SEL)	04/27
CIRCUIT BOARD NO.	MODEL NO.	
NTSC:VEP83394A		
PAL:VEP83394B		SCM065

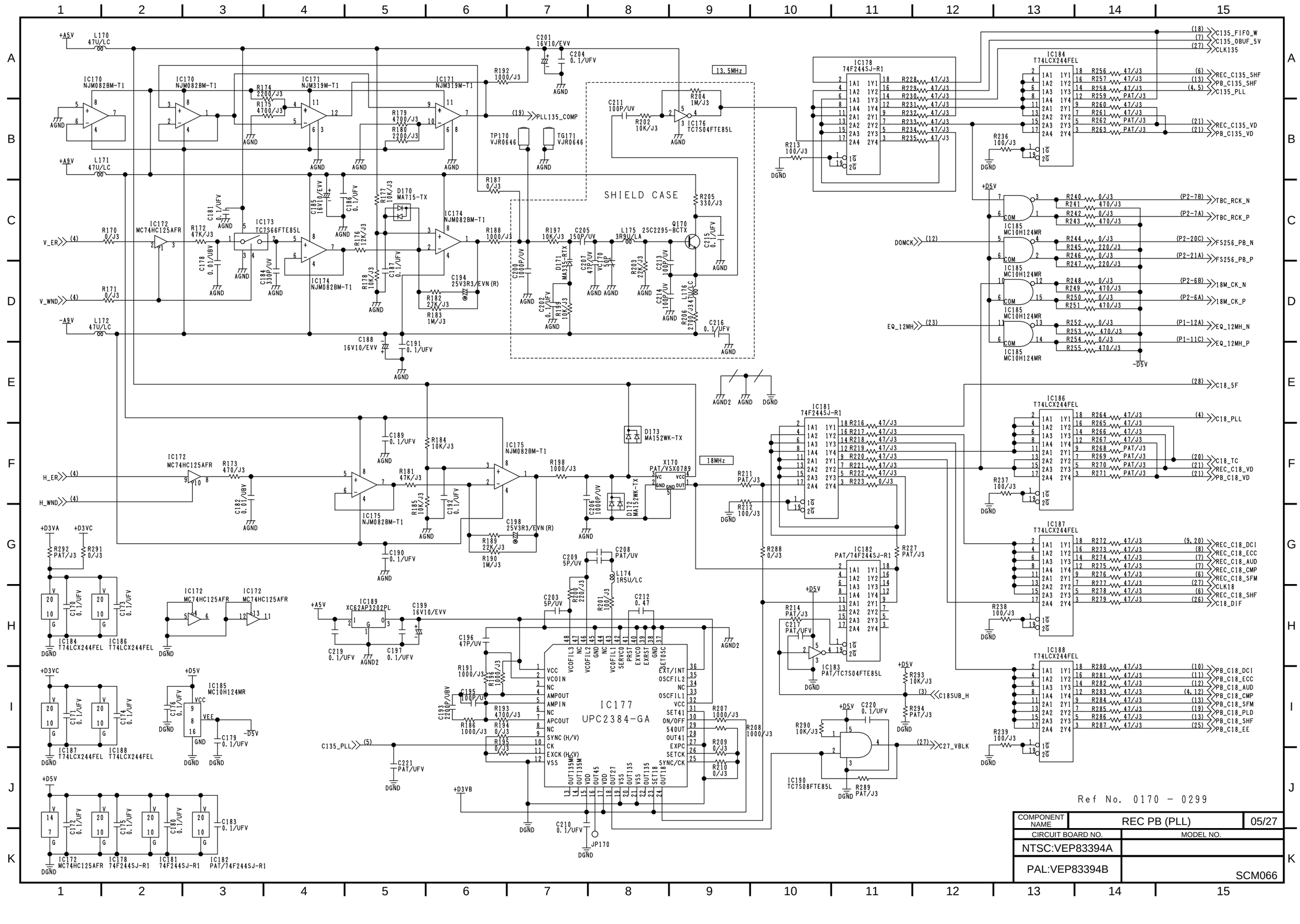
SHIELD CASE
IC177 UPC2384-GA
IC170 NJM082BM-T1
IC171 NJM319M-T1
IC172 MC74HC125AFR
IC173 TC7S66FTE85L
IC174 NJM082BM-T1
IC175 NJM082BM-T1
IC176 TC7S04FTE85L
IC178 74F244SJ-R1
IC181 74F244SJ-R1
IC182 PAT/74F244SJ-R1
IC183 PAT/TC7S04FTE85L
IC184 T74LCX244FEL
IC185 MC10H124MR
IC186 T74LCX244FEL
IC187 T74LCX244FEL
IC188 T74LCX244FEL
IC189 XC62AP3202PL
IC190 TC7S08FTE85L
D170 MA715-TX
D171 MA3X151-RTX
D172 MA152WK-TX
D173 MA152WK-TX
X170 PAT/VSX0789
Q170 2SC2295-BCTX
L170 47U/LC
L171 47U/LC
L172 47U/LC
L174 1R5U/LC
L175 3R9U/LA
L176 2700/J3417/LC
TP170 VJR0646
TG171 VJR0646
13.5MHz
18MHz
+A5V
+A9V
-A9V
+D5V
-D5V
+D3VA
+D3VC
+D3VB
AGND
AGND2
DGND
V_ER
V_WND
H_ER
H_WND
DOMCK
EQ_12MH
C135_PLL
PLL135_COMP
C135_FIFO_W
C135_OBUF_5V
CLK135
REC_C135_SHF
PB_C135_SHF
C135_PLL
REC_C135_VD
PB_C135_VD
TBC_RCK_N
TBC_RCK_P
FS256_PB_N
FS256_PB_P
18M_CK_N
18M_CK_P
EQ_12MH_N
EQ_12MH_P
C18_5F
C18_PLL
C18_TC
REC_C18_VD
PB_C18_VD
REC_C18_DCI
REC_C18_ECC
REC_C18_AUD
REC_C18_CMP
REC_C18_SFM
REC_C18_SHF
REC_C18_DIF
PB_C18_DCI
PB_C18_ECC
PB_C18_AUD
PB_C18_CMP
PB_C18_SFM
PB_C18_PLD
PB_C18_SHF
PB_C18_EE
C18SUB_H
C27_VBLK
JP170
Ref No. 0170 - 0299
COMPONENT NAME
REC PB (PLL)
05/27
CIRCUIT BOARD NO.
MODEL NO.
NTSC:VEP83394A
PAL:VEP83394B
SCM066

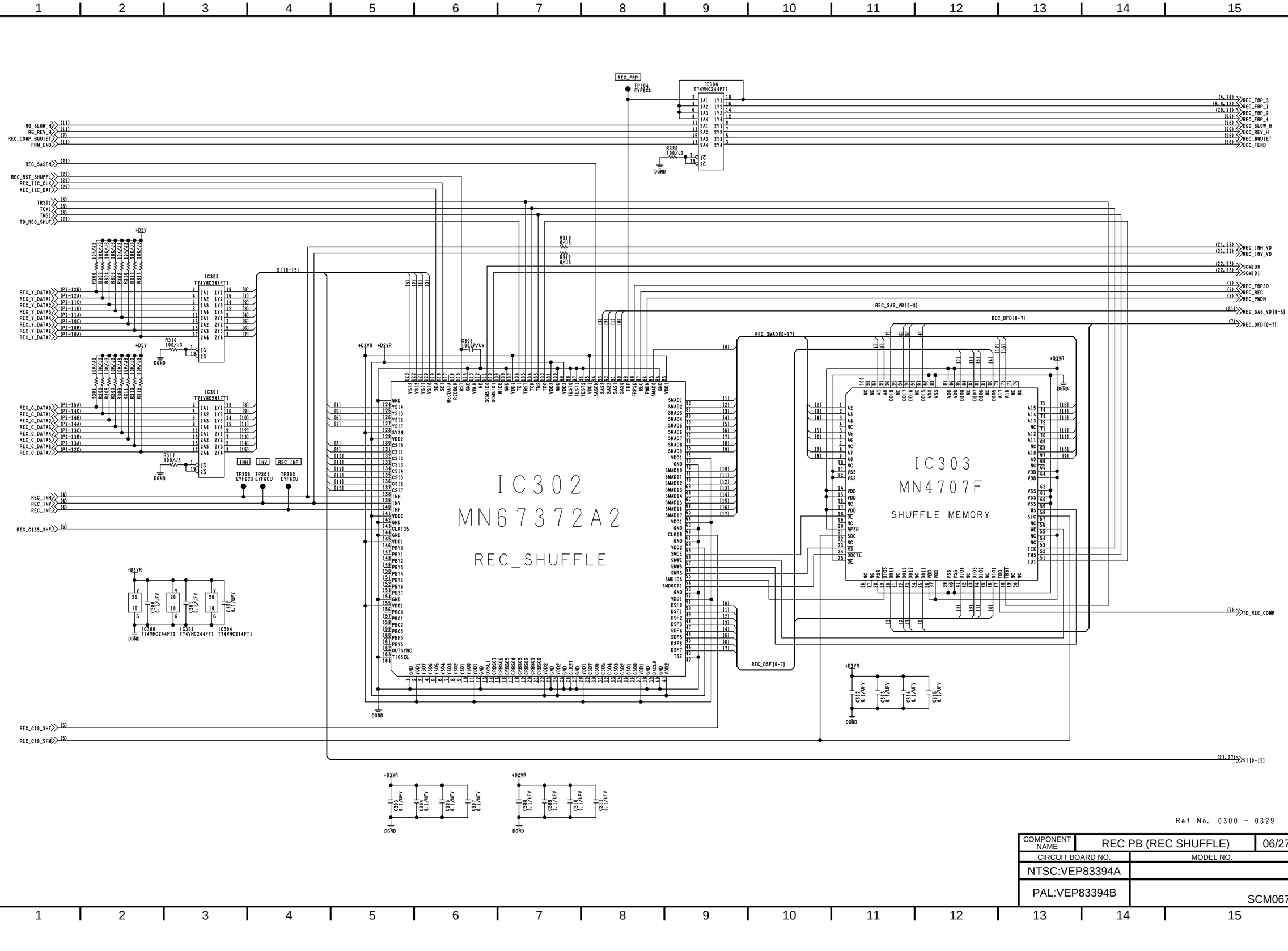

Ref No. 0300 - 0329

COMPONENT NAME	REC PB (REC SHUFFLE)	06/27
CIRCUIT BOARD NO.	MODEL NO.	
NTSC:VEP83394A		
PAL:VEP83394B		SCM067

IC334
M65401FP
REC_AUDIO

IC335
MN673711
REC_COMP

COMPONENT NAME	REC PB (REC CONT/AUDIO) 07/27
CIRCUIT BOARD NO.	MODEL NO.
NTSC:VEP83394A	
PAL:VEP83394B	SCM068

Ref No. 0330 - 0379

IC380
L7A1433
REC_ECC

Ref No. 0380 - 0399

COMPONENT NAME	REC PB (REC ECC)	08/27
CIRCUIT BOARD NO.	MODEL NO.	
NTSC:VEP83394A		
PAL:VEP83394B		SCM069

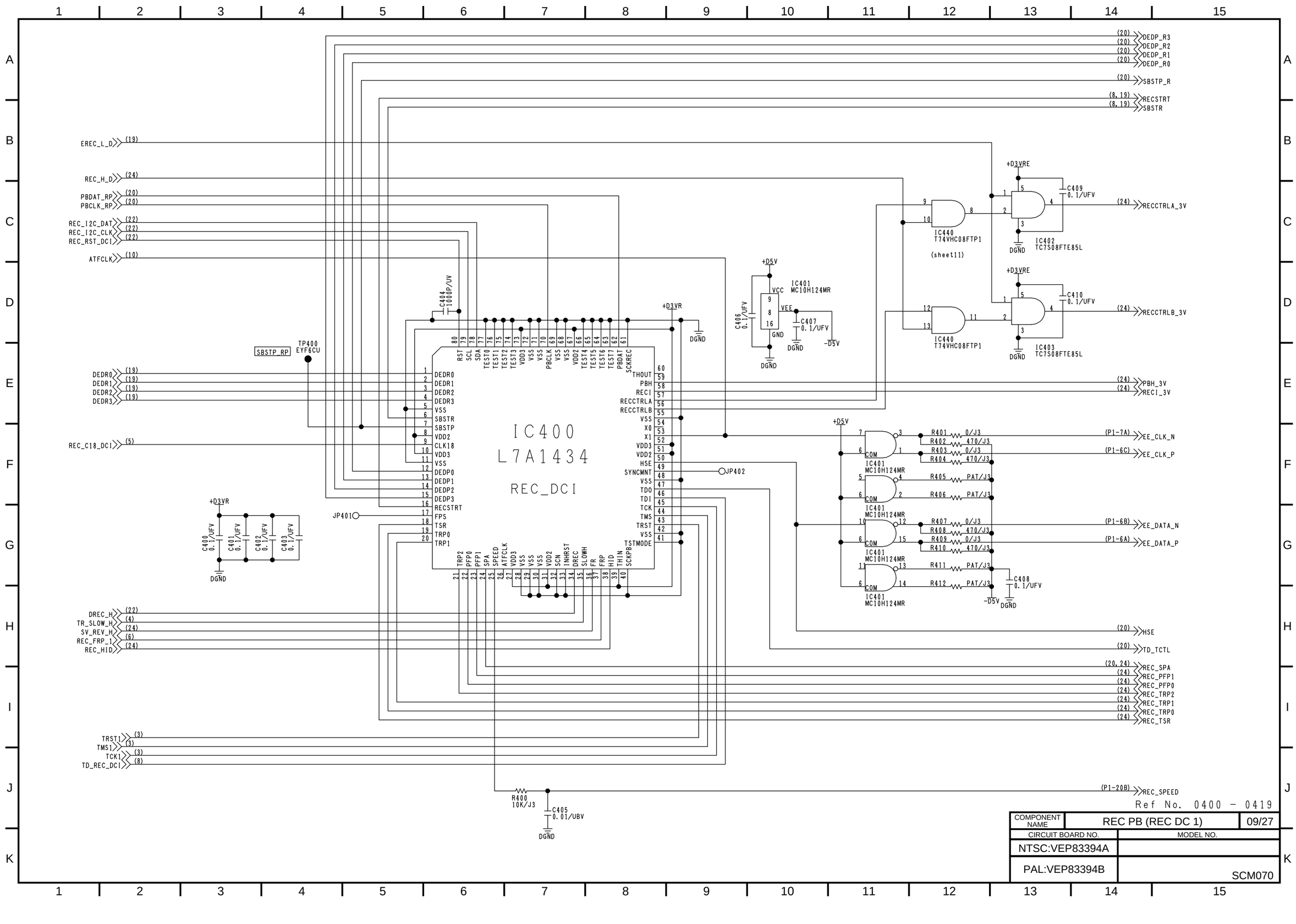

IC400
L7A1434
REC_DCI
IC401
MC10H124MR
IC440
T74VHC08FTP1
(sheet11)
IC402
TC7S08FTE85L
IC403
TC7S08FTE85L
TP400
EYF6CU
SBSTP_RP
JP401
JP402
DEDP_R3
DEDP_R2
DEDP_R1
DEDP_R0
SBSTP_R
RECSTRT
SBSTR
EREC_L_D
REC_H_D
PBDAT_RP
PBCLK_RP
REC_I2C_DAT
REC_I2C_CLK
REC_RST_DCI
ATFCLK
DEDR0
DEDR1
DEDR2
DEDR3
REC_C18_DCI
DREC_H
TR_SLOW_H
SV_REV_H
REC_FRP_1
REC_HID
TRST1
TMS1
TCK1
TD_REC_DCI
RECCTRLA_3V
RECCTRLB_3V
PBH_3V
RECI_3V
EE_CLK_N
EE_CLK_P
EE_DATA_N
EE_DATA_P
HSE
TD_TCTL
REC_SPA
REC_PFP1
REC_PFP0
REC_TRP2
REC_TRP1
REC_TRP0
REC_TSR
REC_SPEED
+D3VR
+D5V
-D5V
DGND
C404 1000P/UV
C400 0.1/UFV
C401 0.1/UFV
C402 0.1/UFV
C403 0.1/UFV
C405 0.01/UBV
C406 0.1/UFV
C407 0.1/UFV
C408 0.1/UFV
C409 0.1/UFV
C410 0.1/UFV
R400 10K/J3
R401 0/J3
R402 470/J3
R403 0/J3
R404 470/J3
R405 PAT/J3
R406 PAT/J3
R407 0/J3
R408 470/J3
R409 0/J3
R410 470/J3
R411 PAT/J3
R412 PAT/J3
Ref No. 0400 - 0419
COMPONENT NAME
REC PB (REC DC 1)
09/27
CIRCUIT BOARD NO.
MODEL NO.
NTSC:VEP83394A
PAL:VEP83394B
SCM070

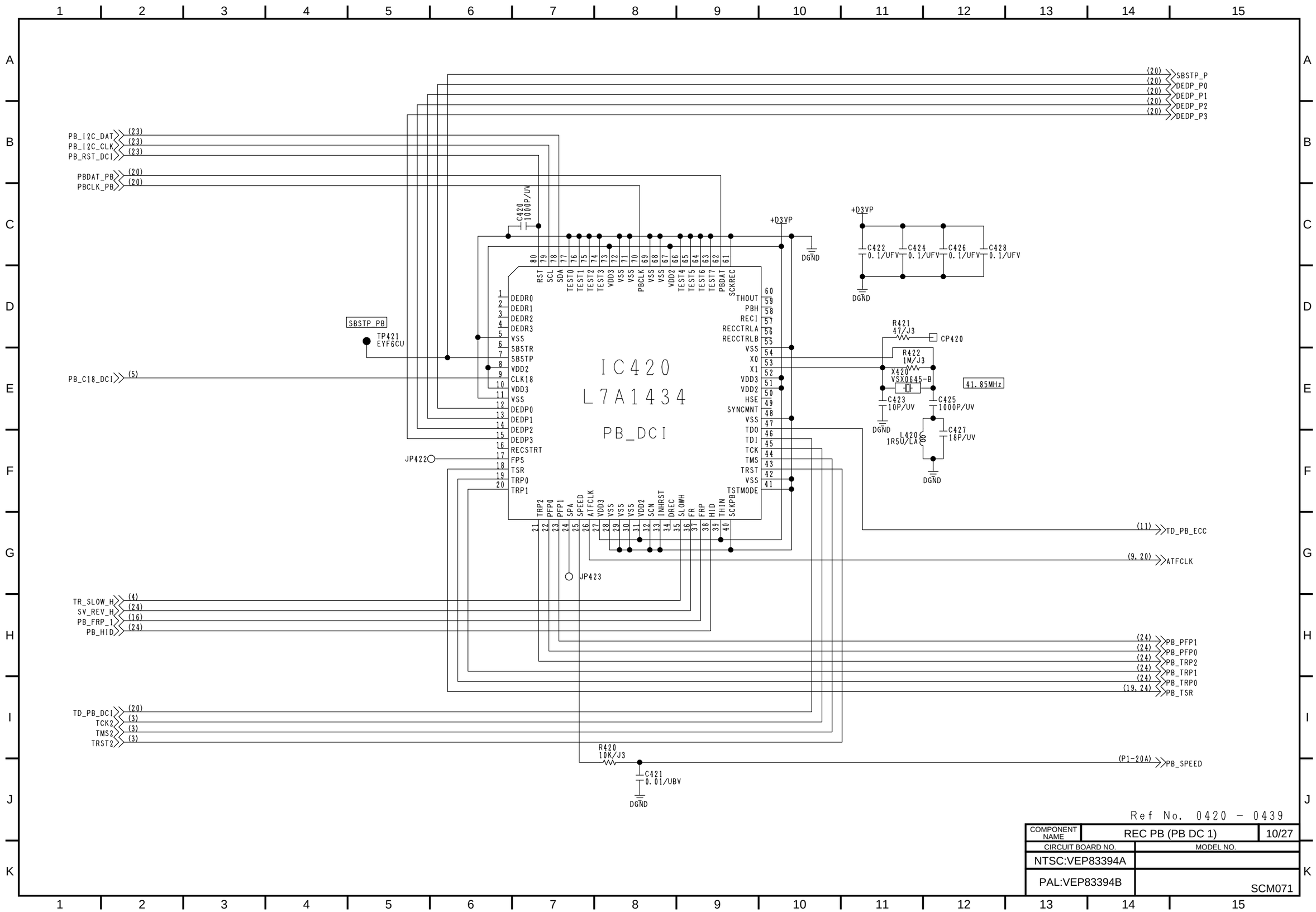

Ref No. 0420 – 0439

COMPONENT NAME	REC PB (PB DC 1)	10/27
CIRCUIT BOARD NO.		MODEL NO.
NTSC:VEP83394A		
PAL:VEP83394B		SCM071

IC441
L7A1433
PB_ECC

Ref No. 0440 – 0459

COMPONENT NAME	REC PB (PB ECC)	11/27
CIRCUIT BOARD NO.	MODEL NO.	
NTSC:VEP83394A		
PAL:VEP83394B		SCM072

(SHEET9)

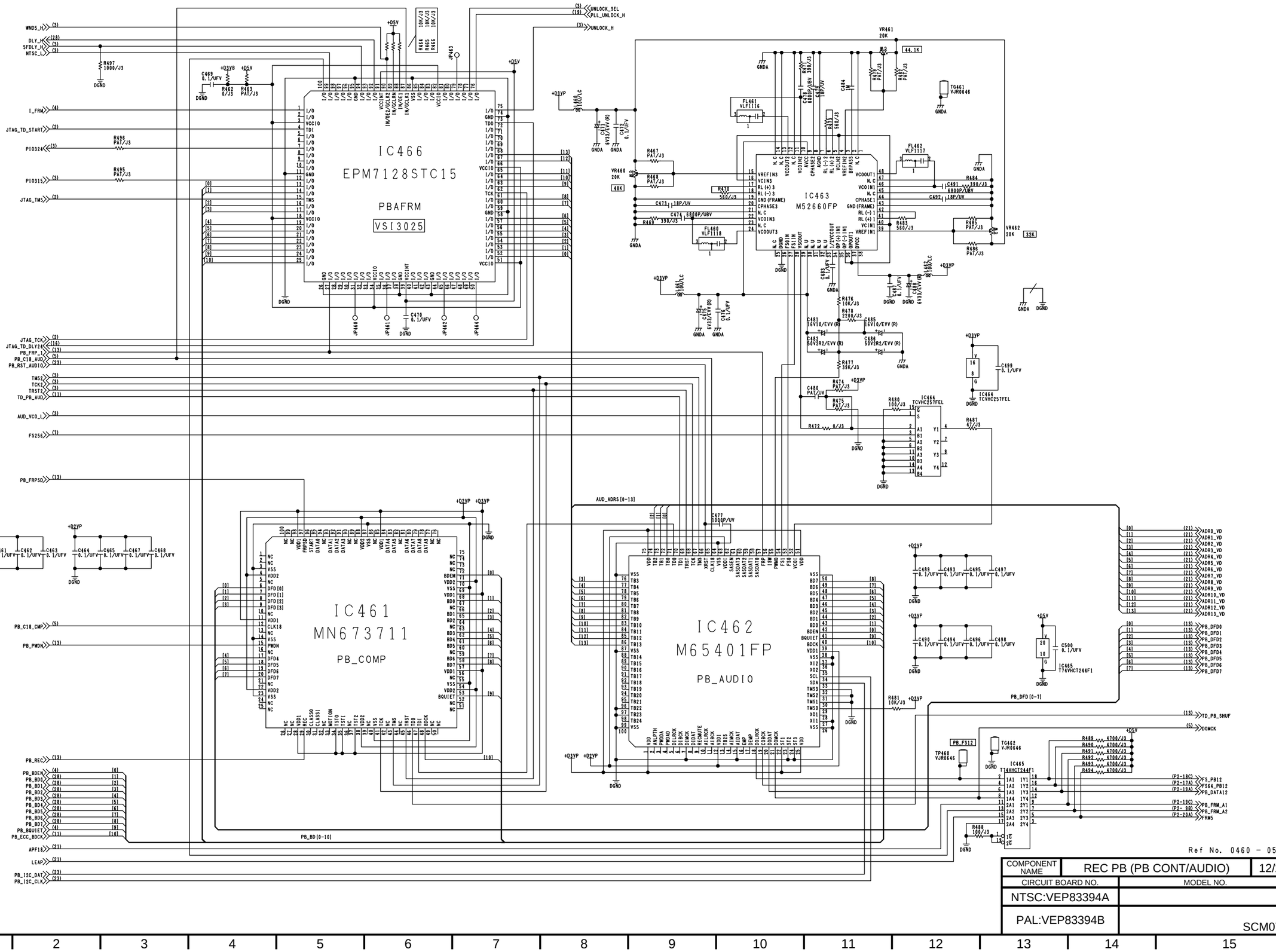

Ref No. 0460 – 0509

COMPONENT NAME	REC PB (PB CONT/AUDIO)	12/27
CIRCUIT BOARD NO.	MODEL NO.	
NTSC:VEP83394A		
PAL:VEP83394B		SCM073

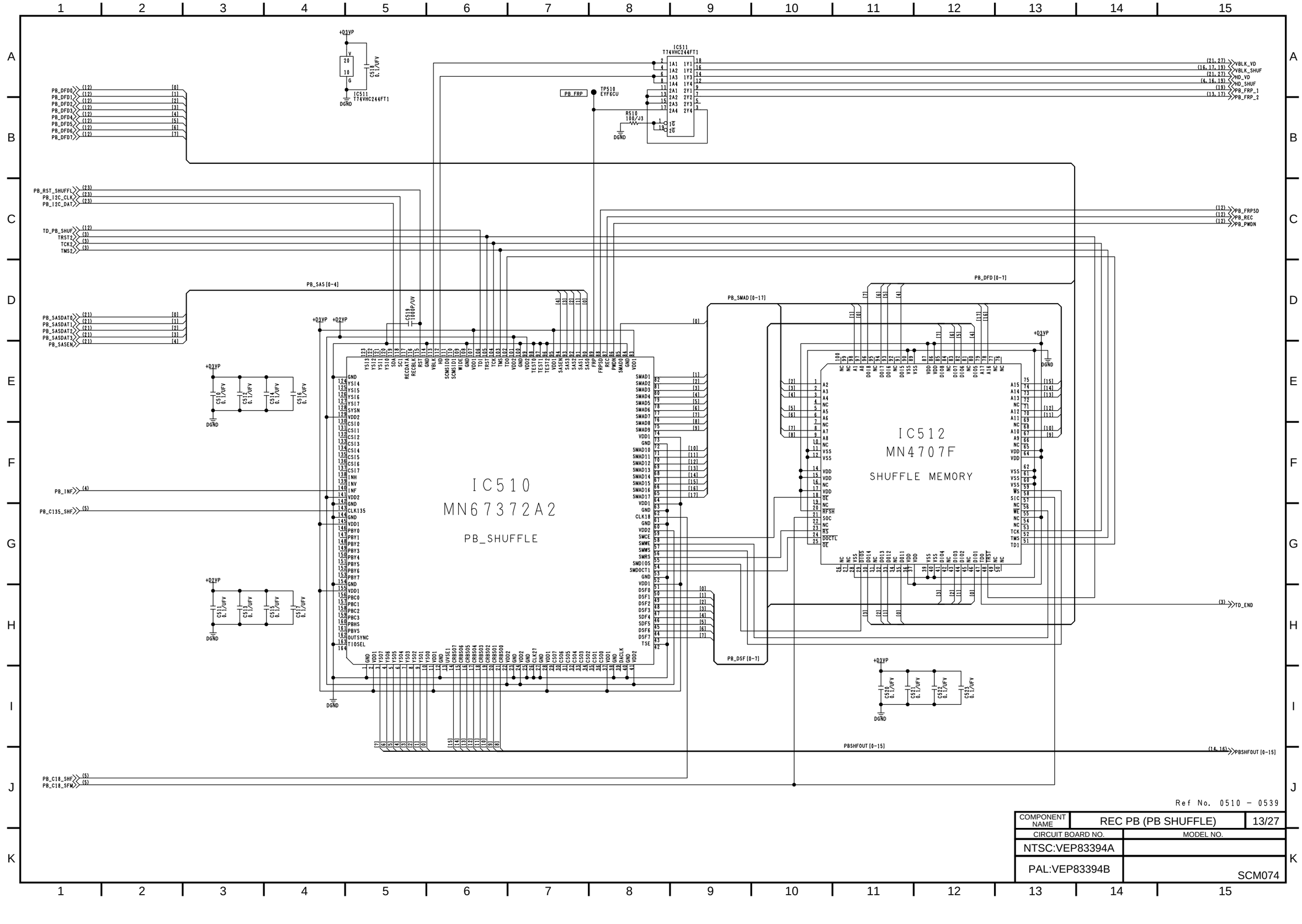

Ref No. 0510 – 0539

COMPONENT NAME	REC PB (PB SHUFFLE)	13/27
CIRCUIT BOARD NO.	MODEL NO.	
NTSC:VEP83394A		
PAL:VEP83394B		SCM074

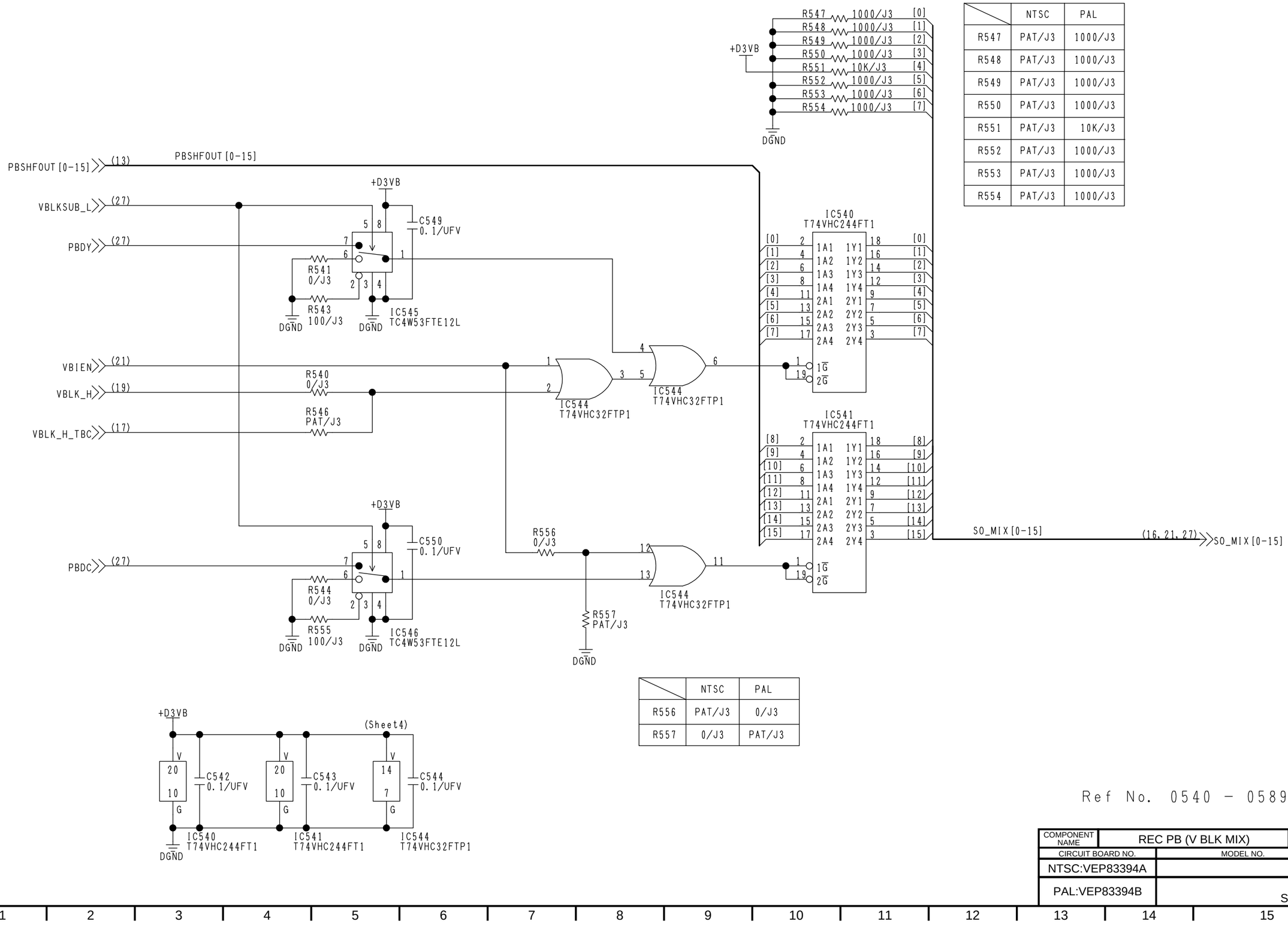

	NTSC	PAL
R547	PAT/J3	1000/J3
R548	PAT/J3	1000/J3
R549	PAT/J3	1000/J3
R550	PAT/J3	1000/J3
R551	PAT/J3	10K/J3
R552	PAT/J3	1000/J3
R553	PAT/J3	1000/J3
R554	PAT/J3	1000/J3

	NTSC	PAL
R556	PAT/J3	0/J3
R557	0/J3	PAT/J3

Ref No. 0540 - 0589

COMPONENT NAME	REC PB (V BLK MIX)	14/27
CIRCUIT BOARD NO.	MODEL NO.	
NTSC:VEP83394A		
PAL:VEP83394B	SCM075	

[ONLY PAL]

IC642
CG25123-5106
PRE_SHUFFLE

IC641
EPM7128STC15
DLY24
VSI3026

	NTSC	PAL
R654	0/J3	PAT/J3

COMPONENT NAME	REC PB (PRE SHUFFLE)	15/27
CIRCUIT BOARD NO.	MODEL NO.	
NTSC:VEP83394A		
PAL:VEP83394B		SCM076

Ref No. 0640 - 0669

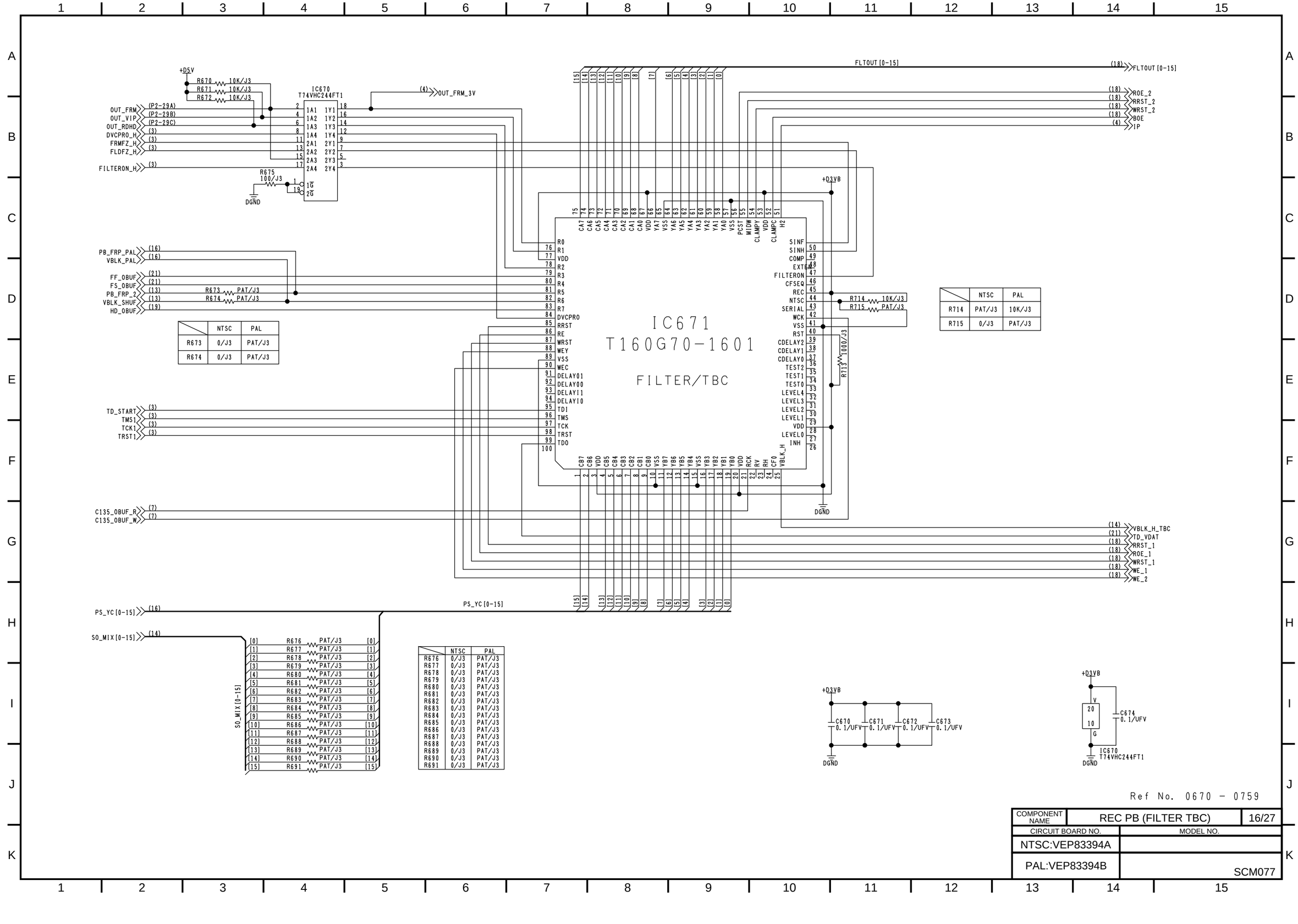

	NTSC	PAL
R673	0/J3	PAT/J3
R674	0/J3	PAT/J3

	NTSC	PAL
R714	PAT/J3	10K/J3
R715	0/J3	PAT/J3

	NTSC	PAL
R676	0/J3	PAT/J3
R677	0/J3	PAT/J3
R678	0/J3	PAT/J3
R679	0/J3	PAT/J3
R680	0/J3	PAT/J3
R681	0/J3	PAT/J3
R682	0/J3	PAT/J3
R683	0/J3	PAT/J3
R684	0/J3	PAT/J3
R685	0/J3	PAT/J3
R686	0/J3	PAT/J3
R687	0/J3	PAT/J3
R688	0/J3	PAT/J3
R689	0/J3	PAT/J3
R690	0/J3	PAT/J3
R691	0/J3	PAT/J3

Ref No. 0670 - 0759

COMPONENT NAME	REC PB (FILTER TBC)	16/27
CIRCUIT BOARD NO.	MODEL NO.	
NTSC:VEP83394A		
PAL:VEP83394B		SCM077

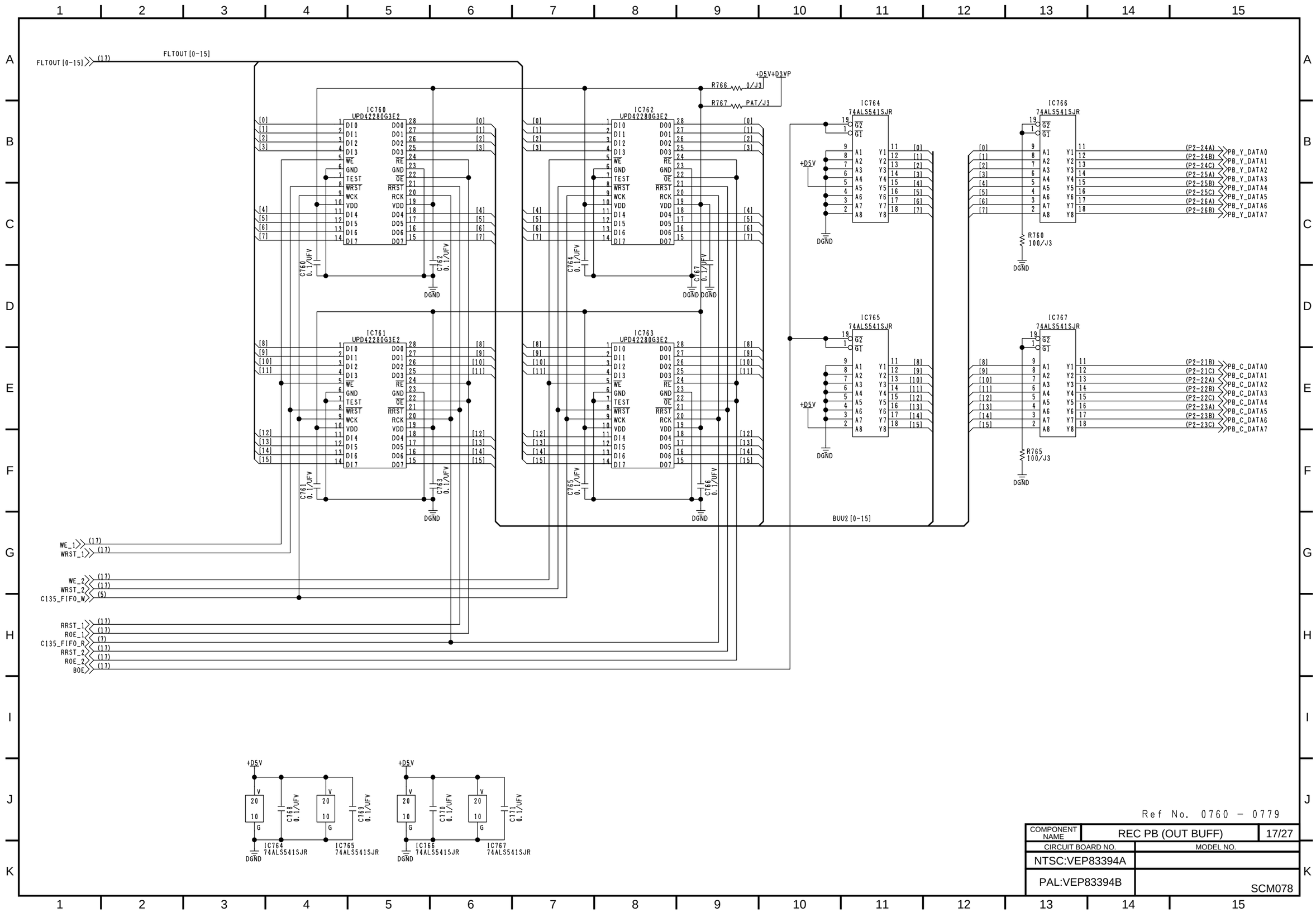

Ref No. 0760 – 0779

COMPONENT NAME	REC PB (OUT BUFF)	17/27
CIRCUIT BOARD NO.	MODEL NO.	
NTSC:VEP83394A		
PAL:VEP83394B		SCM078

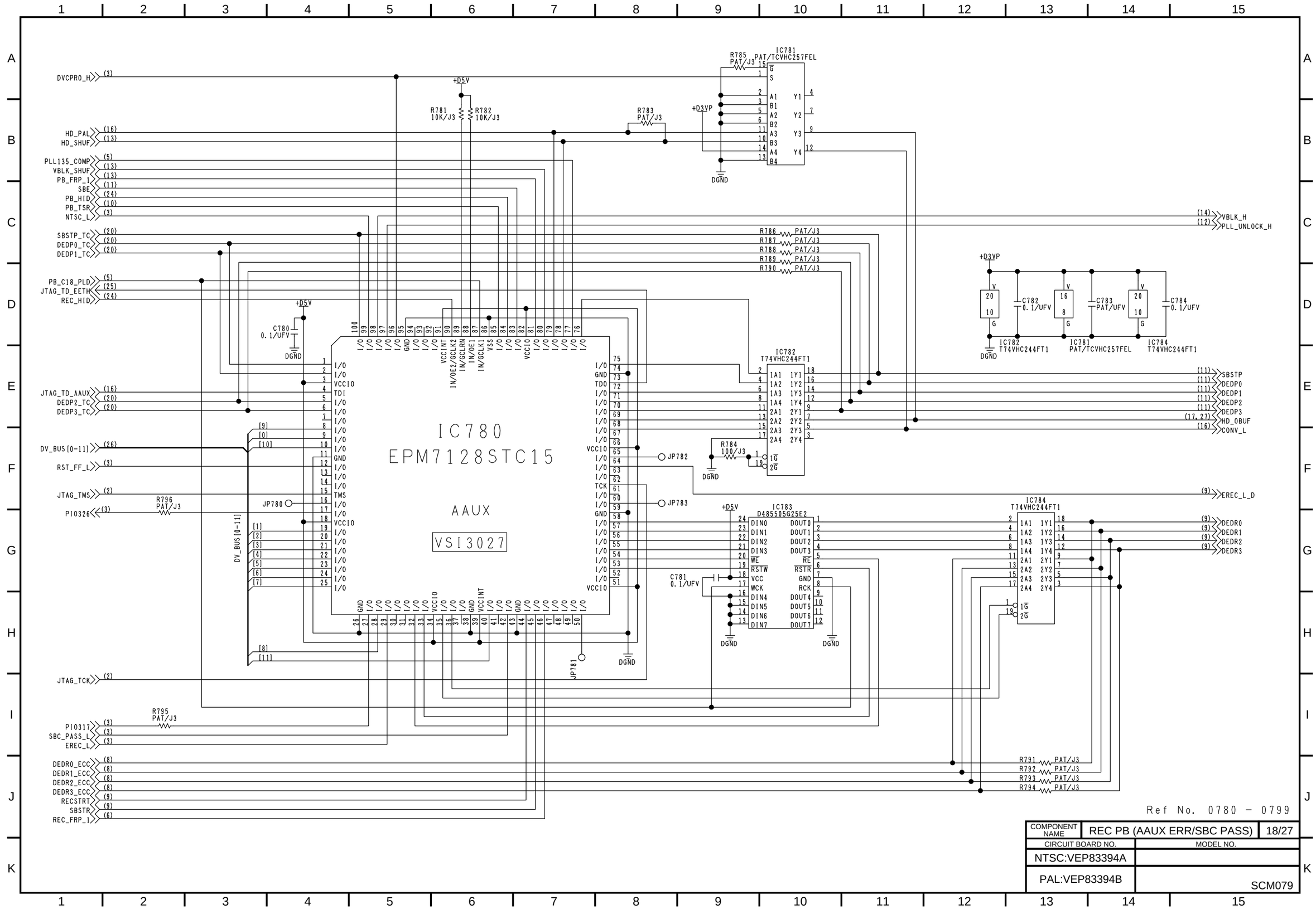
IC780
EPM7128STC15
AAUX
VSI3027
IC781
PAT/TCVHC257FEL
IC782
T74VHC244FT1
IC783
D485505G25E2
IC784
T74VHC244FT1
DV_BUS[0-11]
DVCPRO_H
HD_PAL
HD_SHUF
PLL135_COMP
VBLK_SHUF
PB_FRP_1
SBE
PB_HID
PB_TSR
NTSC_L
SBSTP_TC
DEDP0_TC
DEDP1_TC
PB_C18_PLD
JTAG_TD_EETH
REC_HID
JTAG_TD_AAUX
DEDP2_TC
DEDP3_TC
RST_FF_L
JTAG_TMS
PI0326
JTAG_TCK
PI0317
SBC_PASS_L
EREC_L
DEDR0_ECC
DEDR1_ECC
DEDR2_ECC
DEDR3_ECC
RECSTRT
SBSTR
REC_FRP_1
VBLK_H
PLL_UNLOCK_H
SBSTP
DEDP0
DEDP1
DEDP2
DEDP3
HD_OBUF
CONV_L
EREC_L_D
DEDR0
DEDR1
DEDR2
DEDR3
+D5V
+D3VP
DGND
JP780
JP781
JP782
JP783
R781 10K/J3
R782 10K/J3
R783 PAT/J3
R784 100/J3
R785 PAT/J3
R786 PAT/J3
R787 PAT/J3
R788 PAT/J3
R789 PAT/J3
R790 PAT/J3
R791 PAT/J3
R792 PAT/J3
R793 PAT/J3
R794 PAT/J3
R795 PAT/J3
R796 PAT/J3
C780 0.1/UFV
C781 0.1/UFV
C782 0.1/UFV
C783 PAT/UFV
C784 0.1/UFV
Ref No. 0780 – 0799
COMPONENT NAME
REC PB (AAUX ERR/SBC PASS)
18/27
CIRCUIT BOARD NO.
MODEL NO.
NTSC:VEP83394A
PAL:VEP83394B
SCM079

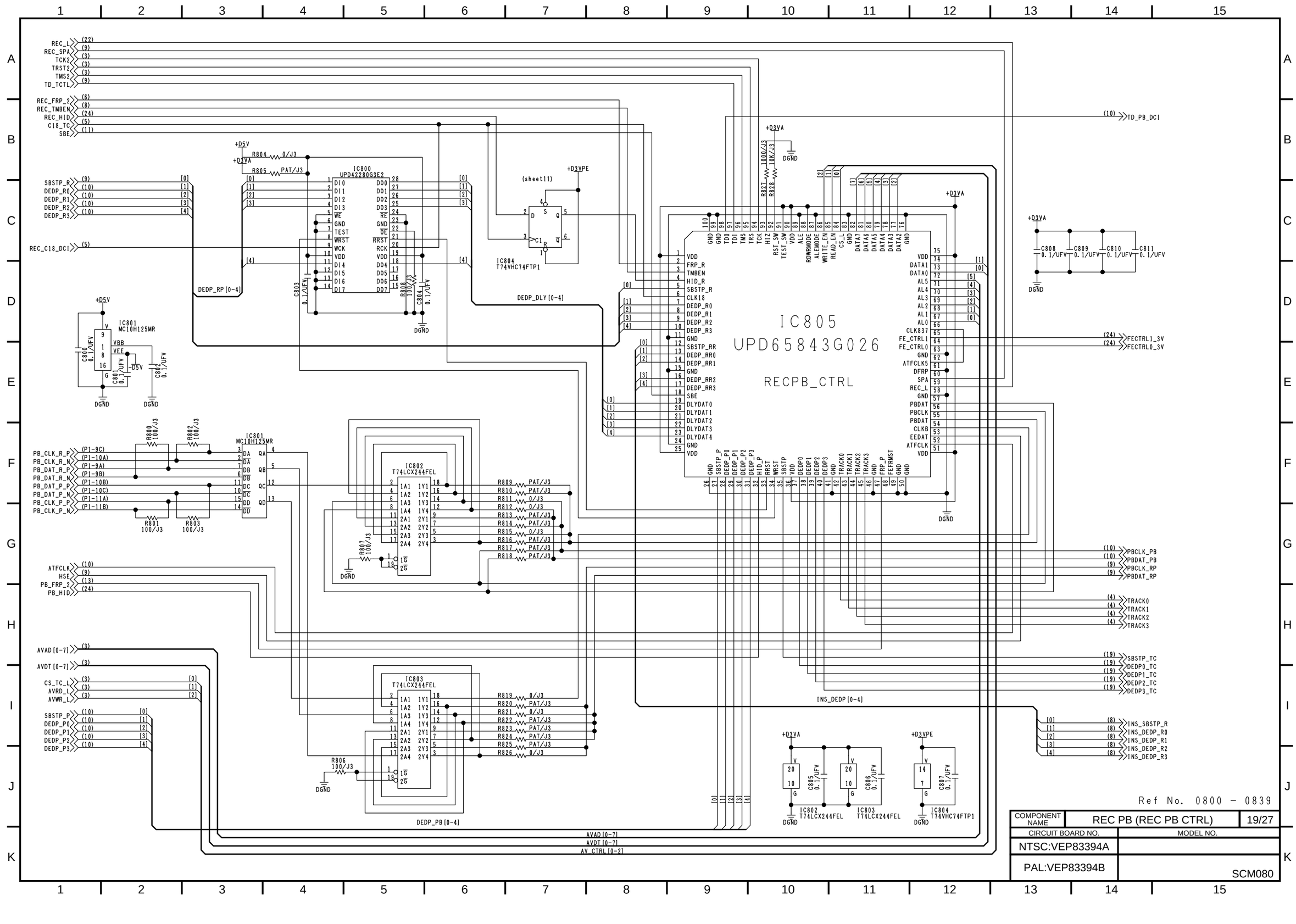
IC805
UPD65843G026
RECPB_CTRL
IC800
UPD42280G3E2
IC801
MC10H125MR
IC802
T74LCX244FEL
IC803
T74LCX244FEL
IC804
T74VHC74FTP1
(sheet11)
REC_L
REC_SPA
TCK2
TRST2
TMS2
TD_TCTL
REC_FRP_2
REC_TMBEN
REC_HID
C18_TC
SBE
REC_C18_DCI
SBSTP_R
DEDP_R0
DEDP_R1
DEDP_R2
DEDP_R3
TD_PB_DCI
DEDP_RP [0-4]
DEDP_DLY [0-4]
DEDP_PB [0-4]
INS_DEDP [0-4]
AVAD [0-7]
AVDT [0-7]
AV_CTRL [0-2]
FECTRL1_3V
FECTRL0_3V
PBCLK_PB
PBDAT_PB
PBCLK_RP
PBDAT_RP
TRACK0
TRACK1
TRACK2
TRACK3
SBSTP_TC
DEDP0_TC
DEDP1_TC
DEDP2_TC
DEDP3_TC
INS_SBSTP_R
INS_DEDP_R0
INS_DEDP_R1
INS_DEDP_R2
INS_DEDP_R3
PB_CLK_R_P
PB_CLK_R_N
PB_DAT_R_P
PB_DAT_R_N
PB_DAT_P_P
PB_DAT_P_N
PB_CLK_P_P
PB_CLK_P_N
ATFCLK
HSE
PB_FRP_2
PB_HID
CS_TC_L
AVRD_L
AVWR_L
+D5V
+D3VA
+D3VPE
DGND
Ref No. 0800 - 0839
COMPONENT NAME
REC PB (REC PB CTRL)
19/27
CIRCUIT BOARD NO.
MODEL NO.
NTSC:VEP83394A
PAL:VEP83394B
SCM080

IC840

UPD65868D022

VIDEO_DATA

TCK1 (3)
TRST1 (3)
TMS1 (3)
TD_VDAT (17)
TD_REC_SHUF (6)
RST_GA_L (3)
REC_VDAT_BDEN (7)
REC_BDCK (8)
REC_COMP_BQUIET (7)
R840 47/J3

REC_BD_VD[0-7]
REC_VDAT_BD0 (7) R841 47/J3 [0]
REC_VDAT_BD1 (7) R842 47/J3 [1]
REC_VDAT_BD2 (7) R843 47/J3 [2]
REC_VDAT_BD3 (7) R844 47/J3 [3]
REC_VDAT_BD4 (7) R845 47/J3 [4]
REC_VDAT_BD5 (7) R846 47/J3 [5]
REC_VDAT_BD6 (7) R847 47/J3 [6]
REC_VDAT_BD7 (7) R848 47/J3 [7]
RX[0-4] (27)
RX[0-4]

R854 10K/J3
C840 1000P/J/V
R855 100/J3
DGND

REC_AUD_HIZ12 (7)
REC_AUD_WR12 (7)
JP840
JP841
JP842

REC_SAS_VD[0-3] (6)
REC_SAS_VD[0-3]
REC_SASEN (6,27)

+D3VA
R849 10K/J3
R850 10K/J3

REC_C18_VD (5)
REC_C135_VD (5)
JP843

SI[0-15] (6)
SI[0-15]

R851 10K/J3
R852 10K/J3
R853 10K/J3
+D3VA
DGND

AVDT[0-7] (3)
AVDT[0-7]
AVAD[0-7] (3)
AVAD[0-7]
REC_INH_VD (6)
REC_INV_VD (6)
REC_FRP_2 (6)
CS_VD_L (3)
AVRD_L (3)
AVWR_L (3)

PB_BD_VD[0-7]
PB_SAS_VD[0-4]
+D3VA
DGND

R858 10K/J3
R859 10K/J3
+D3VA
JP844
JP845
JP846
JP847
JP848
JP849
JP850

AUD_ADRS[0-13]

R856 10K/J3
R857 10K/J3
SO_MIX[0-15]

C841 0.1/UFV
C842 0.1/UFV
C843 0.1/UFV
C844 0.1/UFV
+D3VA
DGND

PB_FRP_2 (13)
PB_BQUIET (4)
PB_ECC_BDCK (11)
PB_BDEN (4)
PB_BD0 (28)
PB_BD1 (28)
PB_BD2 (28)
PB_BD3 (28)
PB_BD4 (28)
PB_BD5 (28)
PB_BD6 (28)
PB_BD7 (28)
PS[0-4] (27)
PB_SASDAT0 (13)
PB_SASDAT1 (13)
PB_SASDAT2 (13)
PB_SASDAT3 (13)
PB_SASEN (13)
FS_OBUF (3,17,27)
FF_OBUF (3,17,27)
ADR0_VD (12)
ADR1_VD (12)
ADR2_VD (12)
ADR3_VD (12)
ADR4_VD (12)
ADR5_VD (12)
ADR6_VD (12)
ADR7_VD (12)
ADR8_VD (12)
ADR9_VD (12)
ADR10_VD (12)
ADR11_VD (12)
ADR12_VD (12)
ADR13_VD (12)
PB_C18_VD (5)
PB_C135_VD (5)
LEAP (12,26)
APF18 (12)
SO_MIX[0-15] (14,15,27)
VBLK_VD (13)
HD_VD (13)
VBIEN (14)

Ref No. 0840 - 0869

COMPONENT NAME	REC PB (VIDEO DATA)	20/27
CIRCUIT BOARD NO.	MODEL NO.	
NTSC:VEP83394A		
PAL:VEP83394B		SCM081

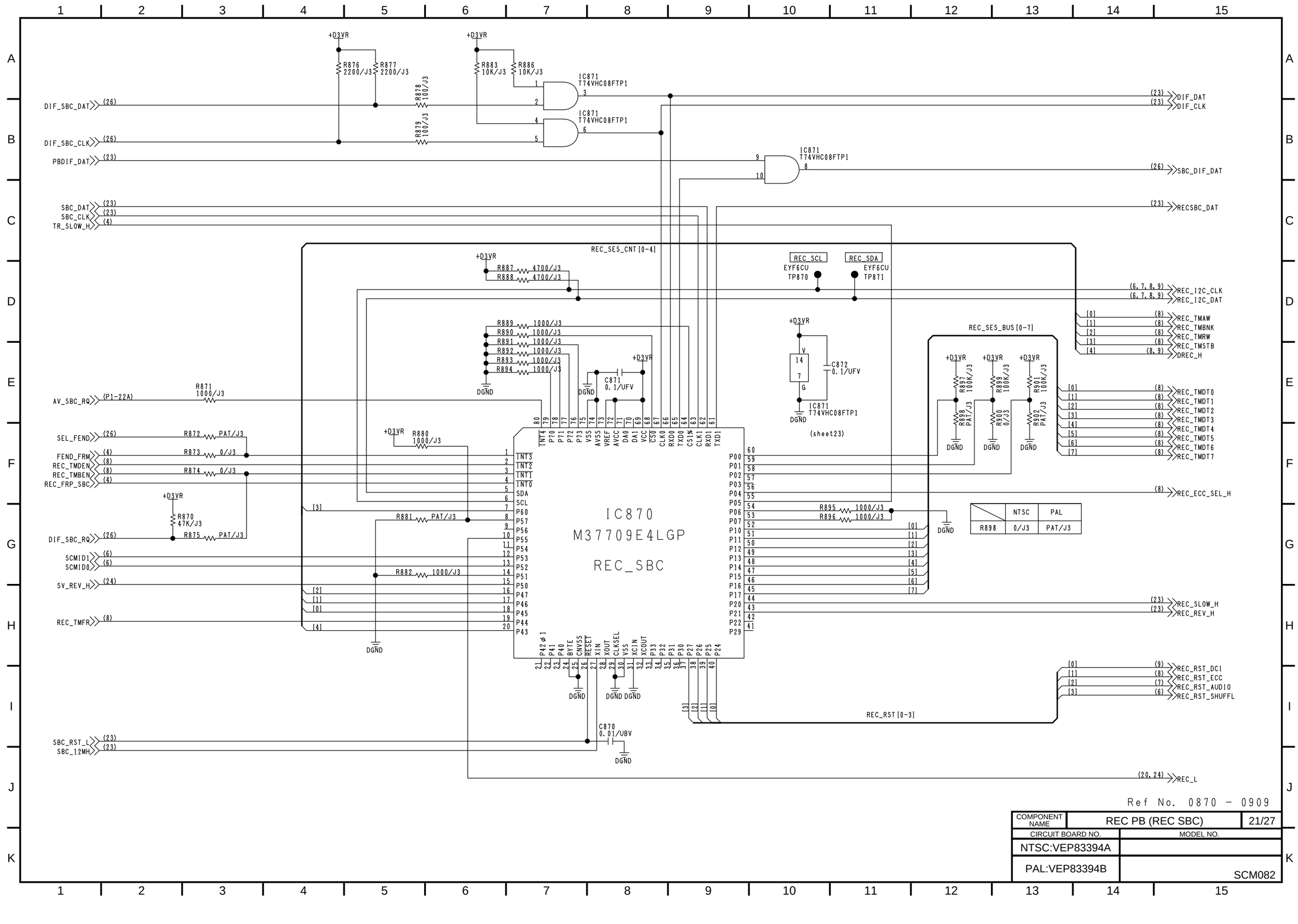

Ref No. 0870 - 0909

COMPONENT NAME	REC PB (REC SBC)	21/27
CIRCUIT BOARD NO.	MODEL NO.	
NTSC:VEP83394A		
PAL:VEP83394B		SCM082

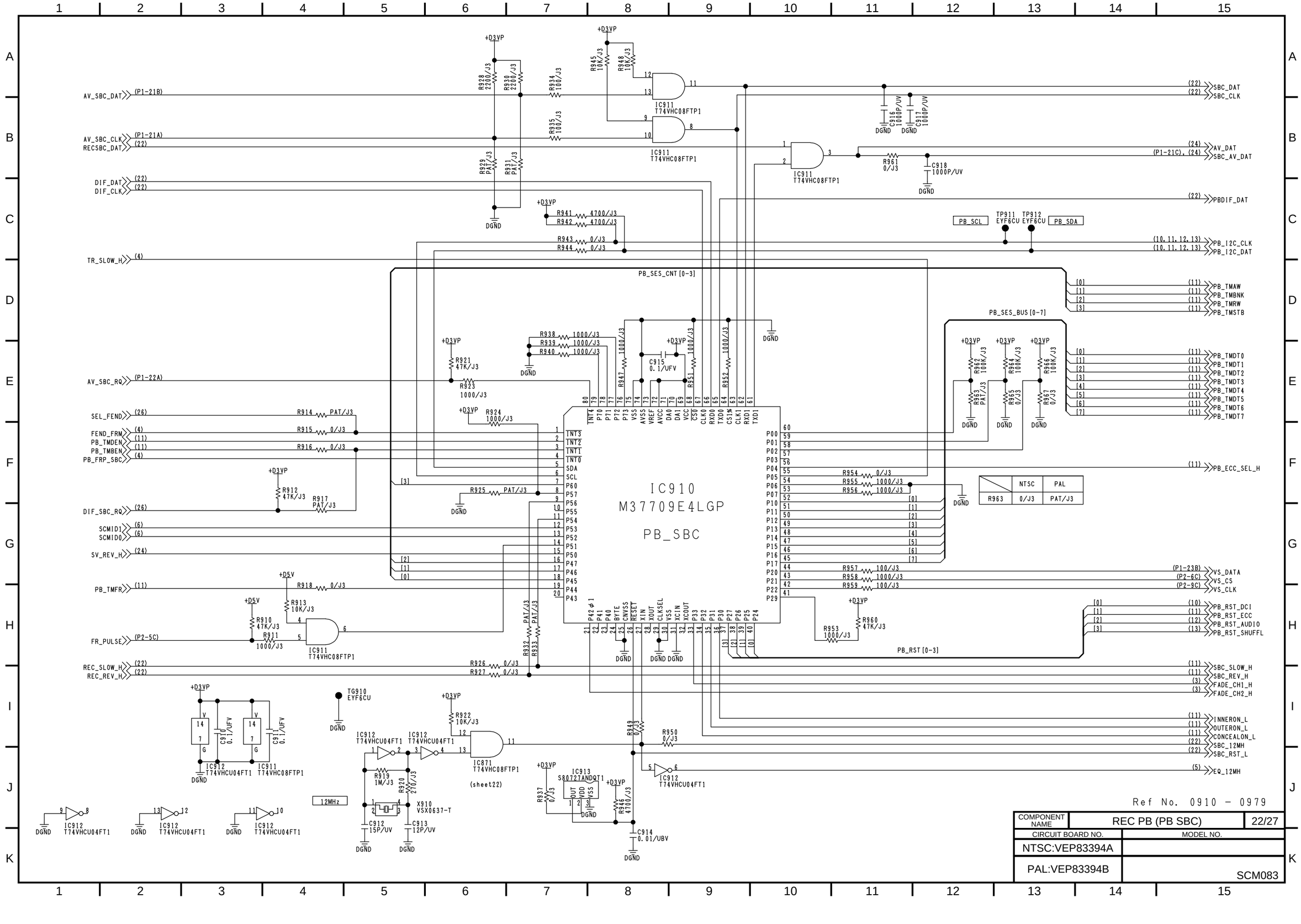

	NTSC	PAL
R963	0/J3	PAT/J3

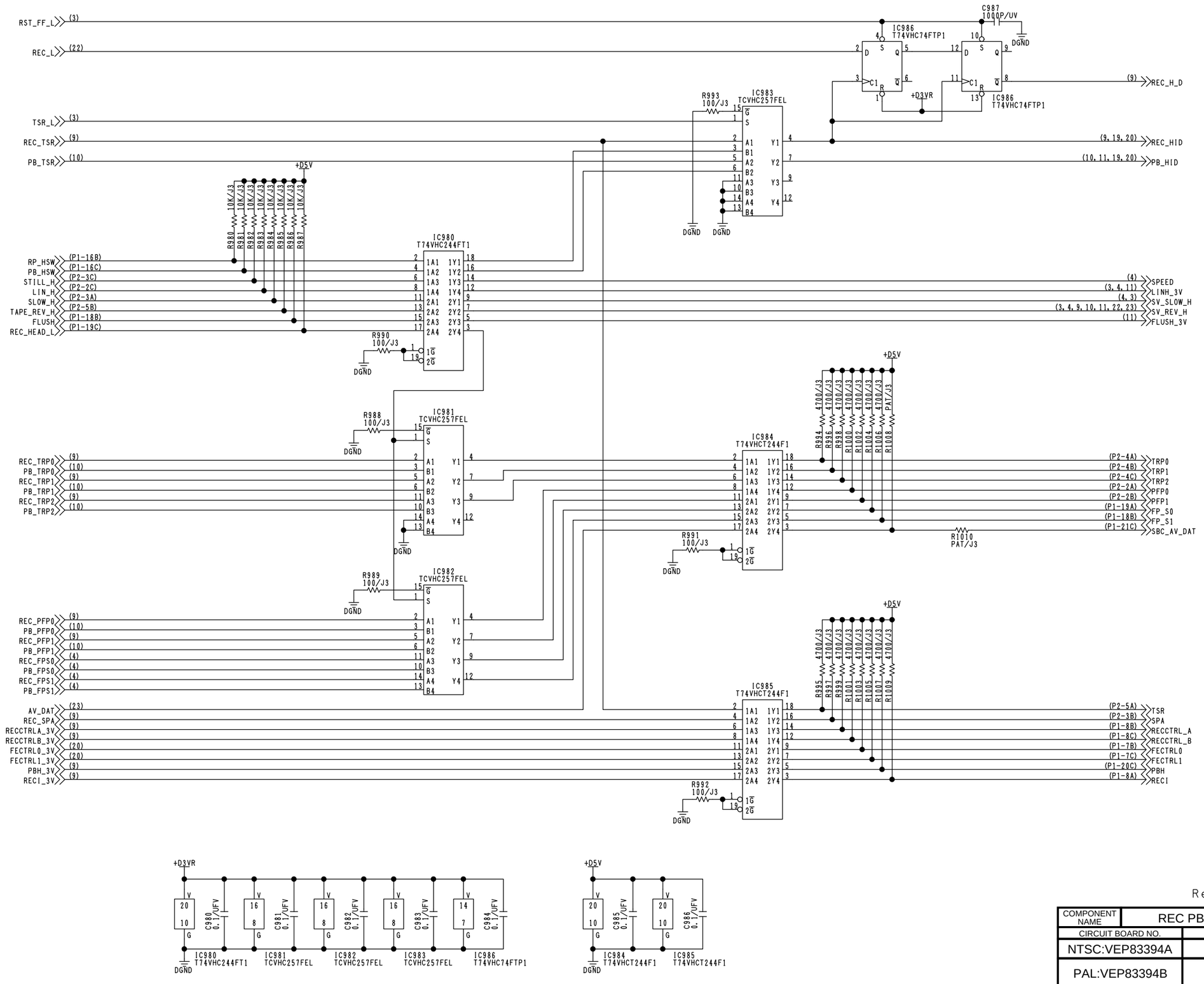

Ref No. 0980 – 1019

COMPONENT NAME	REC PB (SERVO SEP)	23/27
CIRCUIT BOARD NO.	MODEL NO.	
NTSC:VEP83394A		
PAL:VEP83394B	SCM084	

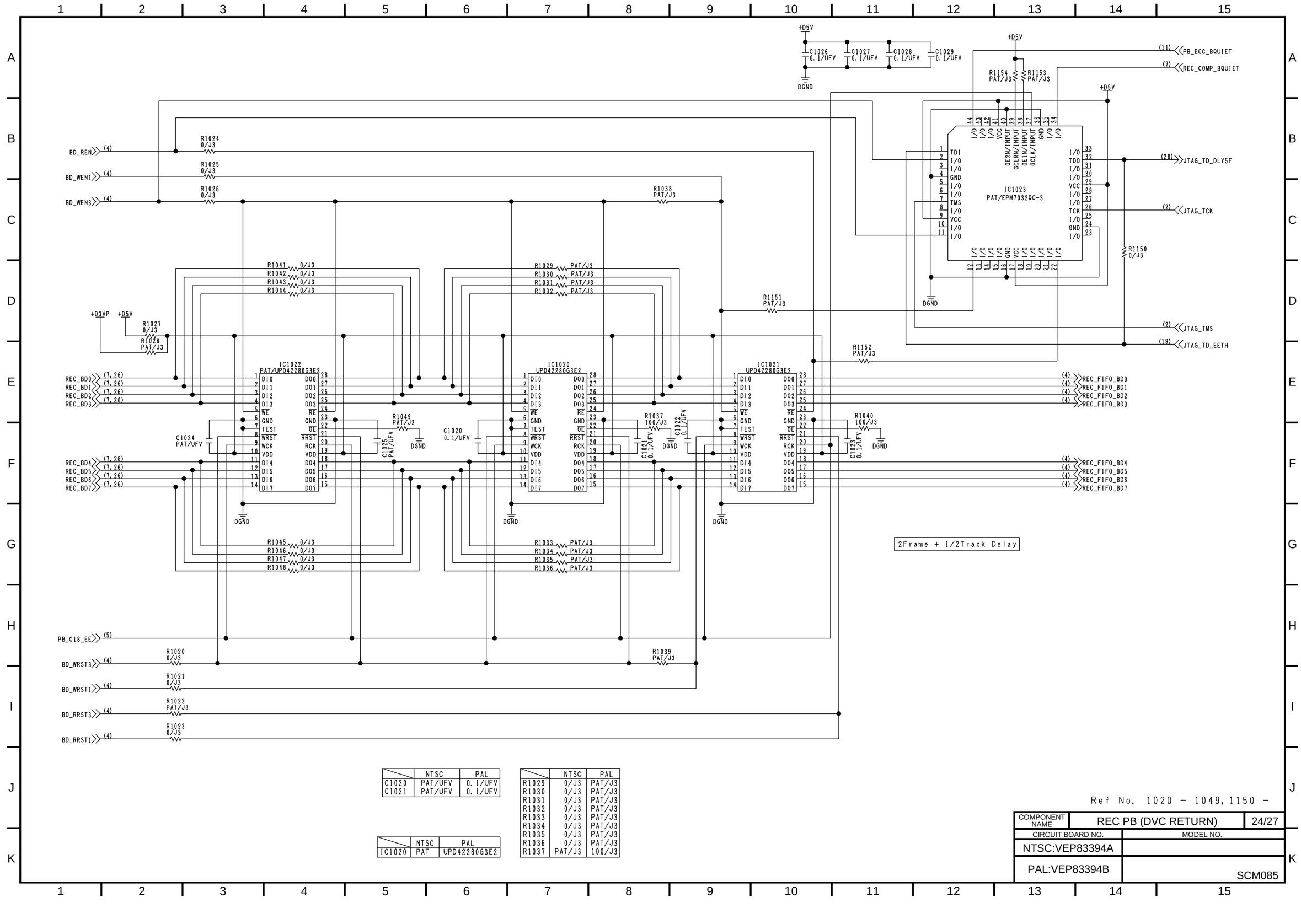

	NTSC	PAL
C1020	PAT/UFV	0.1/UFV
C1021	PAT/UFV	0.1/UFV

	NTSC	PAL
IC1020	PAT	UPD42280G3E2

	NTSC	PAL
R1029	0/J3	PAT/J3
R1030	0/J3	PAT/J3
R1031	0/J3	PAT/J3
R1032	0/J3	PAT/J3
R1033	0/J3	PAT/J3
R1034	0/J3	PAT/J3
R1035	0/J3	PAT/J3
R1036	0/J3	PAT/J3
R1037	PAT/J3	100/J3

Ref No. 1020 - 1049, 1150 -

COMPONENT NAME	REC PB (DVC RETURN)	24/27
CIRCUIT BOARD NO.		MODEL NO.
NTSC:VEP83394A		
PAL:VEP83394B		SCM085

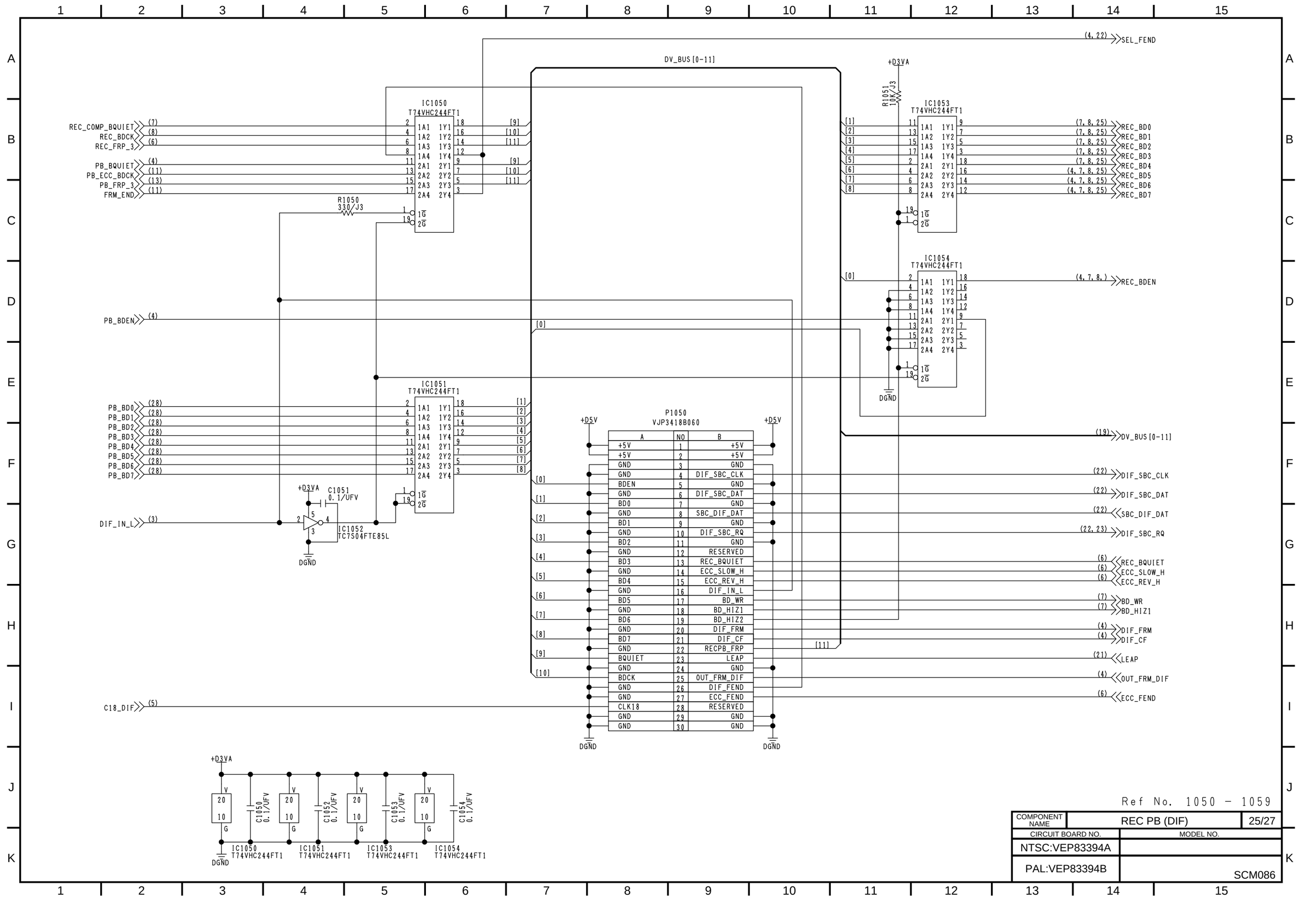

Ref No. 1050 - 1059

COMPONENT NAME	REC PB (DIF)	25/27
CIRCUIT BOARD NO.	MODEL NO.	
NTSC:VEP83394A		
PAL:VEP83394B	SCM086	

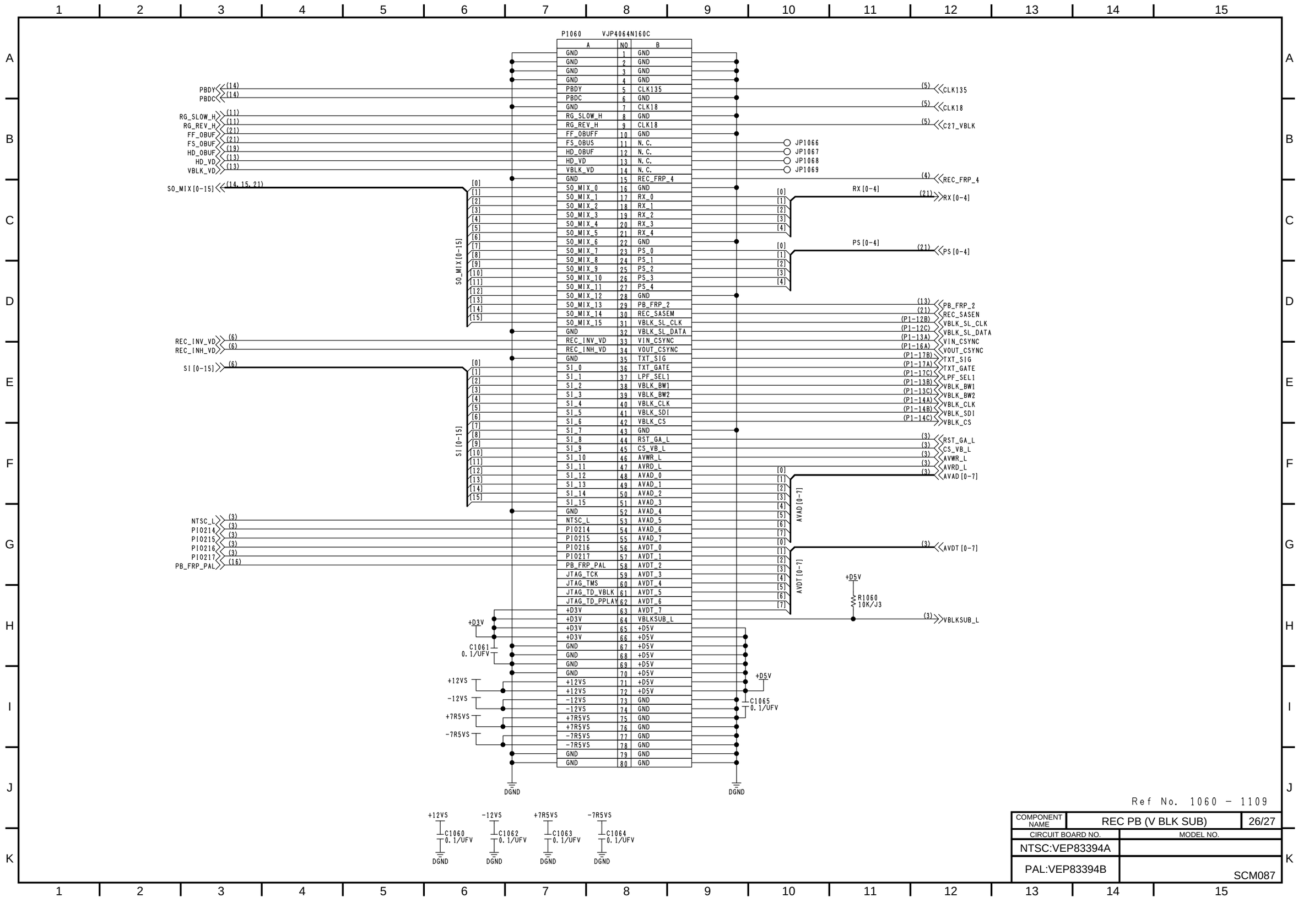
P1060 VJP4064N160C
A NO B
GND 1 GND
GND 2 GND
GND 3 GND
GND 4 GND
PBDY 5 CLK135
PBDC 6 GND
GND 7 CLK18
RG_SLOW_H 8 GND
RG_REV_H 9 CLK18
FF_OBUFF 10 GND
FS_OBUS 11 N.C.
HD_OBUF 12 N.C.
HD_VD 13 N.C.
VBLK_VD 14 N.C.
GND 15 REC_FRP_4
SO_MIX_0 16 GND
SO_MIX_1 17 RX_0
SO_MIX_2 18 RX_1
SO_MIX_3 19 RX_2
SO_MIX_4 20 RX_3
SO_MIX_5 21 RX_4
SO_MIX_6 22 GND
SO_MIX_7 23 PS_0
SO_MIX_8 24 PS_1
SO_MIX_9 25 PS_2
SO_MIX_10 26 PS_3
SO_MIX_11 27 PS_4
SO_MIX_12 28 GND
SO_MIX_13 29 PB_FRP_2
SO_MIX_14 30 REC_SASEM
SO_MIX_15 31 VBLK_SL_CLK
GND 32 VBLK_SL_DATA
REC_INV_VD 33 VIN_CSYNC
REC_INH_VD 34 VOUT_CSYNC
GND 35 TXT_SIG
SI_0 36 TXT_GATE
SI_1 37 LPF_SEL1
SI_2 38 VBLK_BW1
SI_3 39 VBLK_BW2
SI_4 40 VBLK_CLK
SI_5 41 VBLK_SDI
SI_6 42 VBLK_CS
SI_7 43 GND
SI_8 44 RST_GA_L
SI_9 45 CS_VB_L
SI_10 46 AVWR_L
SI_11 47 AVRD_L
SI_12 48 AVAD_0
SI_13 49 AVAD_1
SI_14 50 AVAD_2
SI_15 51 AVAD_3
GND 52 AVAD_4
NTSC_L 53 AVAD_5
PIO214 54 AVAD_6
PIO215 55 AVAD_7
PIO216 56 AVDT_0
PIO217 57 AVDT_1
PB_FRP_PAL 58 AVDT_2
JTAG_TCK 59 AVDT_3
JTAG_TMS 60 AVDT_4
JTAG_TD_VBLK 61 AVDT_5
JTAG_TD_PPLAY 62 AVDT_6
+D3V 63 AVDT_7
+D3V 64 VBLKSUB_L
+D3V 65 +D5V
+D3V 66 +D5V
GND 67 +D5V
GND 68 +D5V
GND 69 +D5V
GND 70 +D5V
+12VS 71 +D5V
+12VS 72 +D5V
-12VS 73 GND
-12VS 74 GND
+7R5VS 75 GND
+7R5VS 76 GND
-7R5VS 77 GND
-7R5VS 78 GND
GND 79 GND
GND 80 GND
PBDY (14)
PBDC (14)
RG_SLOW_H (11)
RG_REV_H (11)
FF_OBUF (21)
FS_OBUF (21)
HD_OBUF (19)
HD_VD (13)
VBLK_VD (13)
SO_MIX[0-15] (14,15,21)
REC_INV_VD (6)
REC_INH_VD (6)
SI[0-15] (6)
NTSC_L (3)
PIO214 (3)
PIO215 (3)
PIO216 (3)
PIO217 (3)
PB_FRP_PAL (16)
(5) CLK135
(5) CLK18
(5) C27_VBLK
JP1066
JP1067
JP1068
JP1069
(4) REC_FRP_4
RX[0-4]
(21) RX[0-4]
PS[0-4]
(21) PS[0-4]
(13) PB_FRP_2
(21) REC_SASEN
(P1-12B) VBLK_SL_CLK
(P1-12C) VBLK_SL_DATA
(P1-13A) VIN_CSYNC
(P1-16A) VOUT_CSYNC
(P1-17B) TXT_SIG
(P1-17A) TXT_GATE
(P1-17C) LPF_SEL1
(P1-13B) VBLK_BW1
(P1-13C) VBLK_BW2
(P1-14A) VBLK_CLK
(P1-14B) VBLK_SDI
(P1-14C) VBLK_CS
(3) RST_GA_L
(3) CS_VB_L
(3) AVWR_L
(3) AVRD_L
(3) AVAD[0-7]
AVAD[0-7]
(3) AVDT[0-7]
AVDT[0-7]
+D5V
R1060 10K/J3
(3) VBLKSUB_L
C1061 0.1/UFV
C1065 0.1/UFV
+12VS
-12VS
+7R5VS
-7R5VS
DGND
C1060 0.1/UFV
C1062 0.1/UFV
C1063 0.1/UFV
C1064 0.1/UFV
Ref No. 1060 - 1109
COMPONENT NAME
REC PB (V BLK SUB)
26/27
CIRCUIT BOARD NO.
MODEL NO.
NTSC:VEP83394A
PAL:VEP83394B
SCM087

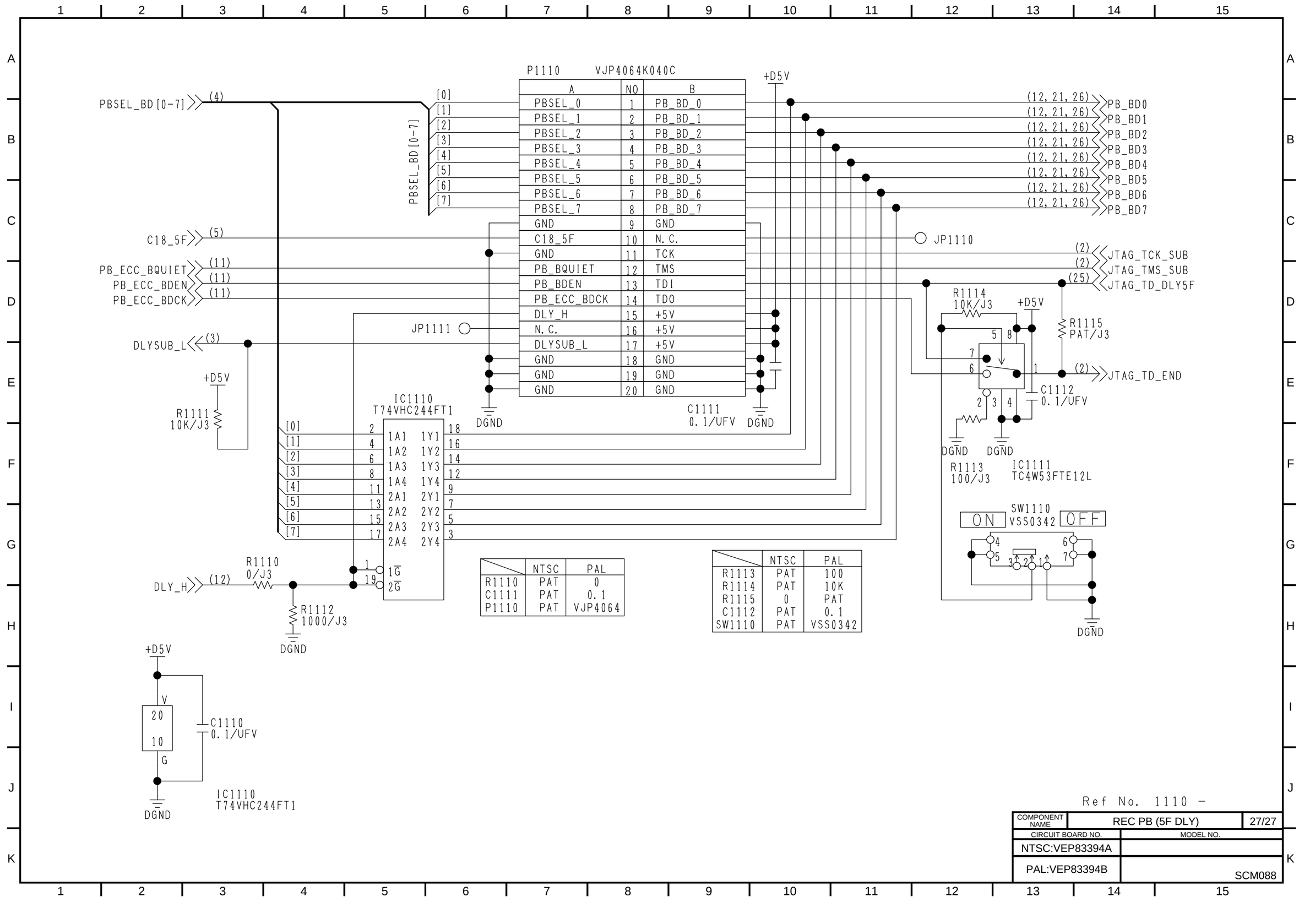
P1110 VJP4064K040C
A NO B
PBSEL_0 1 PB_BD_0
PBSEL_1 2 PB_BD_1
PBSEL_2 3 PB_BD_2
PBSEL_3 4 PB_BD_3
PBSEL_4 5 PB_BD_4
PBSEL_5 6 PB_BD_5
PBSEL_6 7 PB_BD_6
PBSEL_7 8 PB_BD_7
GND 9 GND
C18_5F 10 N. C.
GND 11 TCK
PB_BQUIET 12 TMS
PB_BDEN 13 TDI
PB_ECC_BDCK 14 TDO
DLY_H 15 +5V
N. C. 16 +5V
DLYSUB_L 17 +5V
GND 18 GND
GND 19 GND
GND 20 GND
PBSEL_BD[0-7] (4)
PBSEL_BD[0-7]
C18_5F (5)
PB_ECC_BQUIET (11)
PB_ECC_BDEN (11)
PB_ECC_BDCK (11)
DLYSUB_L (3)
JP1111
+D5V
DGND
C1111 0. 1/UFV
JP1110
(12, 21, 26) PB_BD0
(12, 21, 26) PB_BD1
(12, 21, 26) PB_BD2
(12, 21, 26) PB_BD3
(12, 21, 26) PB_BD4
(12, 21, 26) PB_BD5
(12, 21, 26) PB_BD6
(12, 21, 26) PB_BD7
(2) JTAG_TCK_SUB
(2) JTAG_TMS_SUB
(25) JTAG_TD_DLY5F
(2) JTAG_TD_END
R1114 10K/J3
R1115 PAT/J3
C1112 0. 1/UFV
R1111 10K/J3
IC1110 T74VHC244FT1
[0] [1] [2] [3] [4] [5] [6] [7]
1A1 1A2 1A3 1A4 2A1 2A2 2A3 2A4
1Y1 1Y2 1Y3 1Y4 2Y1 2Y2 2Y3 2Y4
R1110 0/J3
DLY_H (12)
R1112 1000/J3
R1113 100/J3
IC1111 TC4W53FTE12L
SW1110 VSS0342
ON OFF
NTSC PAL
R1110 PAT 0
C1111 PAT 0. 1
P1110 PAT VJP4064
R1113 PAT 100
R1114 PAT 10K
R1115 0 PAT
C1112 PAT 0. 1
SW1110 PAT VSS0342
C1110 0. 1/UFV
IC1110 T74VHC244FT1
Ref No. 1110 -
COMPONENT NAME
REC PB (5F DLY)
27/27
CIRCUIT BOARD NO.
MODEL NO.
NTSC:VEP83394A
PAL:VEP83394B
SCM088

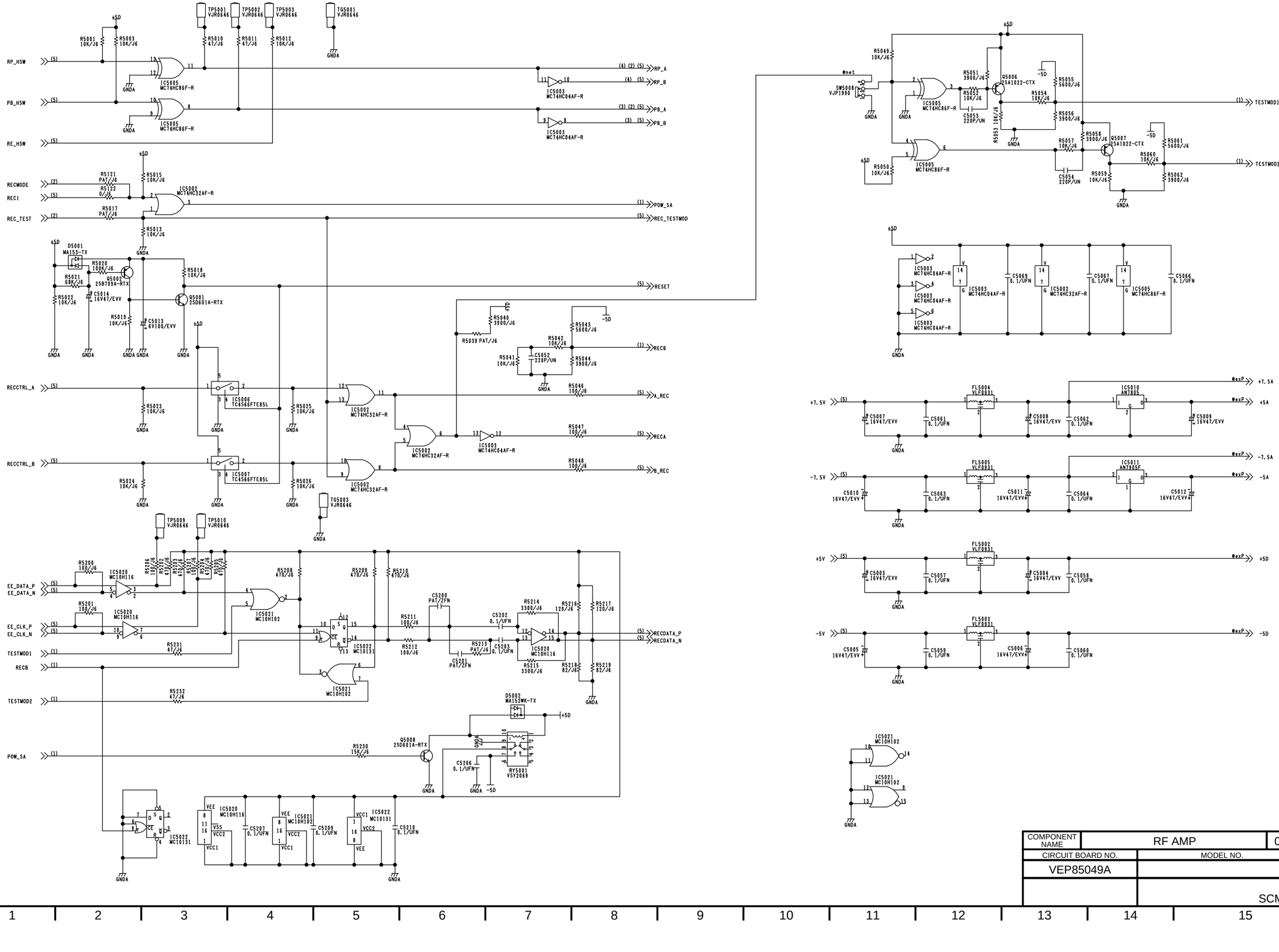

COMPONENT NAME	RF AMP	01/05
CIRCUIT BOARD NO.	MODEL NO.	
VEP85049A		
	SCM190	

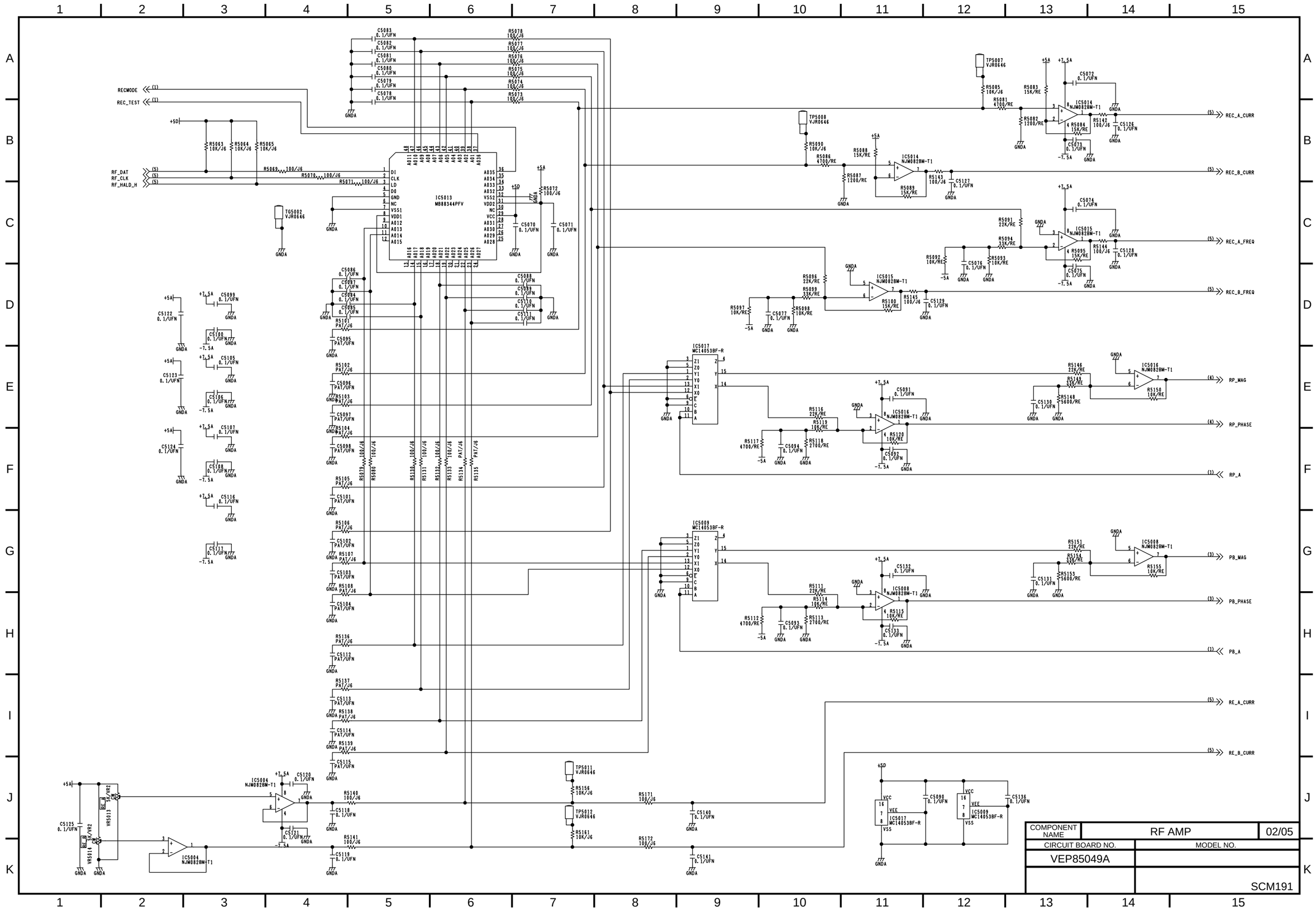
RECMODE
REC_TEST
RF_DAT
RF_CLK
RF_HALD_H
IC5013 MB88344PFV
TG5002 VJR0646
IC5017 MC14053BF-R
IC5009 MC14053BF-R
IC5004 NJM082BM-T1
TP5007 VJR0646
TP5008 VJR0646
TP5011 VJR0646
TP5012 VJR0646
IC5014 NJM082BM-T1
IC5015 NJM082BM-T1
IC5016 NJM082BM-T1
IC5008 NJM082BM-T1
REC_A_CURR
REC_B_CURR
REC_A_FREQ
REC_B_FREQ
RP_MAG
RP_PHASE
RP_A
PB_MAG
PB_PHASE
PB_A
RE_A_CURR
RE_B_CURR
COMPONENT NAME
RF AMP
02/05
CIRCUIT BOARD NO.
VEP85049A
MODEL NO.
SCM191

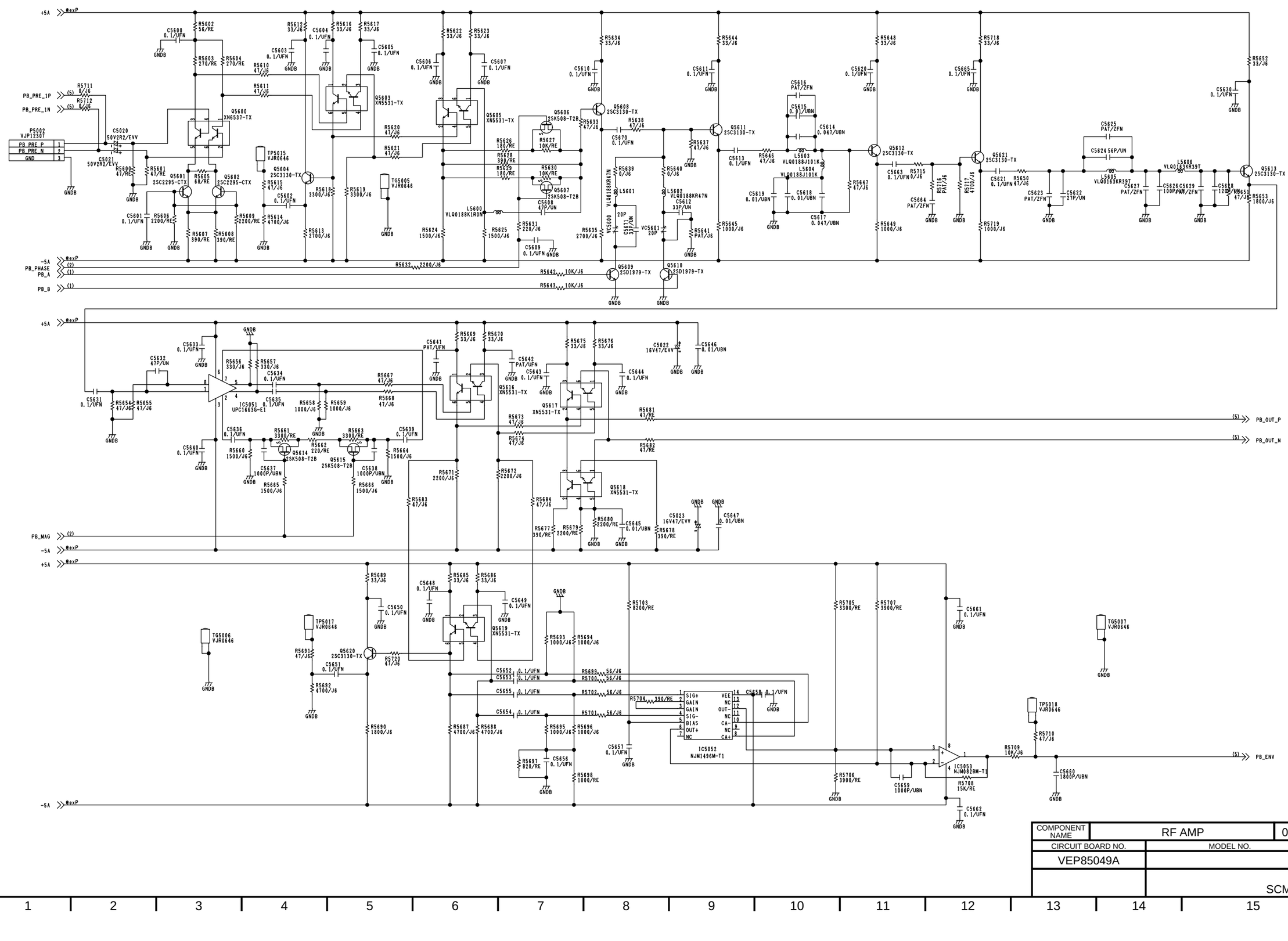
+5A
@exP
PB_PRE_1P
PB_PRE_1N
PS002 VJP1230T
PB_PRE_P
PB_PRE_N
GND
-5A
PB_PHASE
PB_A
PB_B
PB_MAG
PB_OUT_P
PB_OUT_N
PB_ENV
IC5051 UPC1663G-E1
IC5052 NJM1496M-T1
IC5053 NJM082BM-T1
SIG+
GAIN
SIG-
BIAS
OUT+
NC
VEE
OUT-
CA-
CA+
COMPONENT NAME
RF AMP
03/05
CIRCUIT BOARD NO.
MODEL NO.
VEP85049A
SCM192

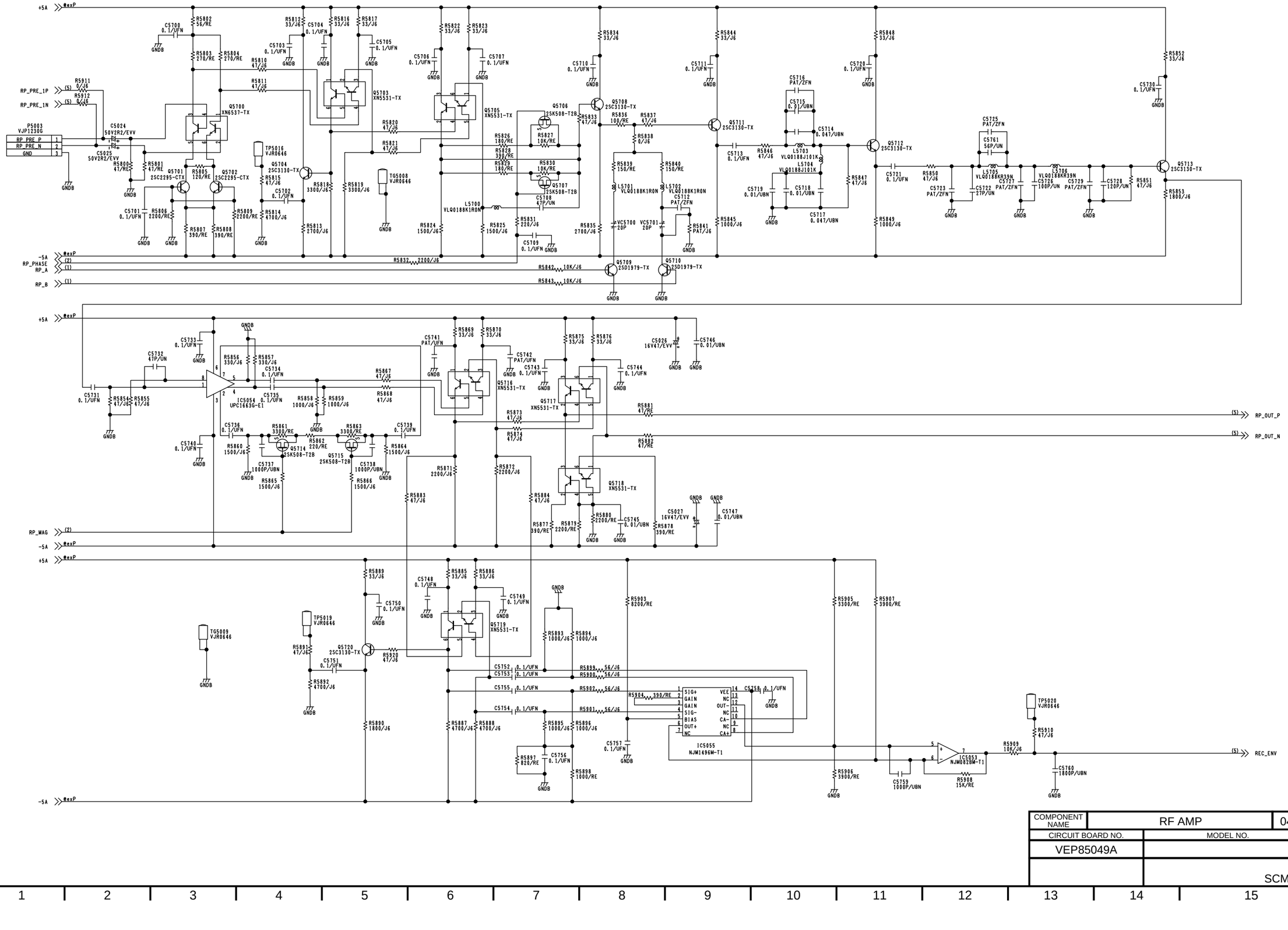

COMPONENT NAME	RF AMP	04/05
CIRCUIT BOARD NO.	MODEL NO.	
VEP85049A		
		SCM193

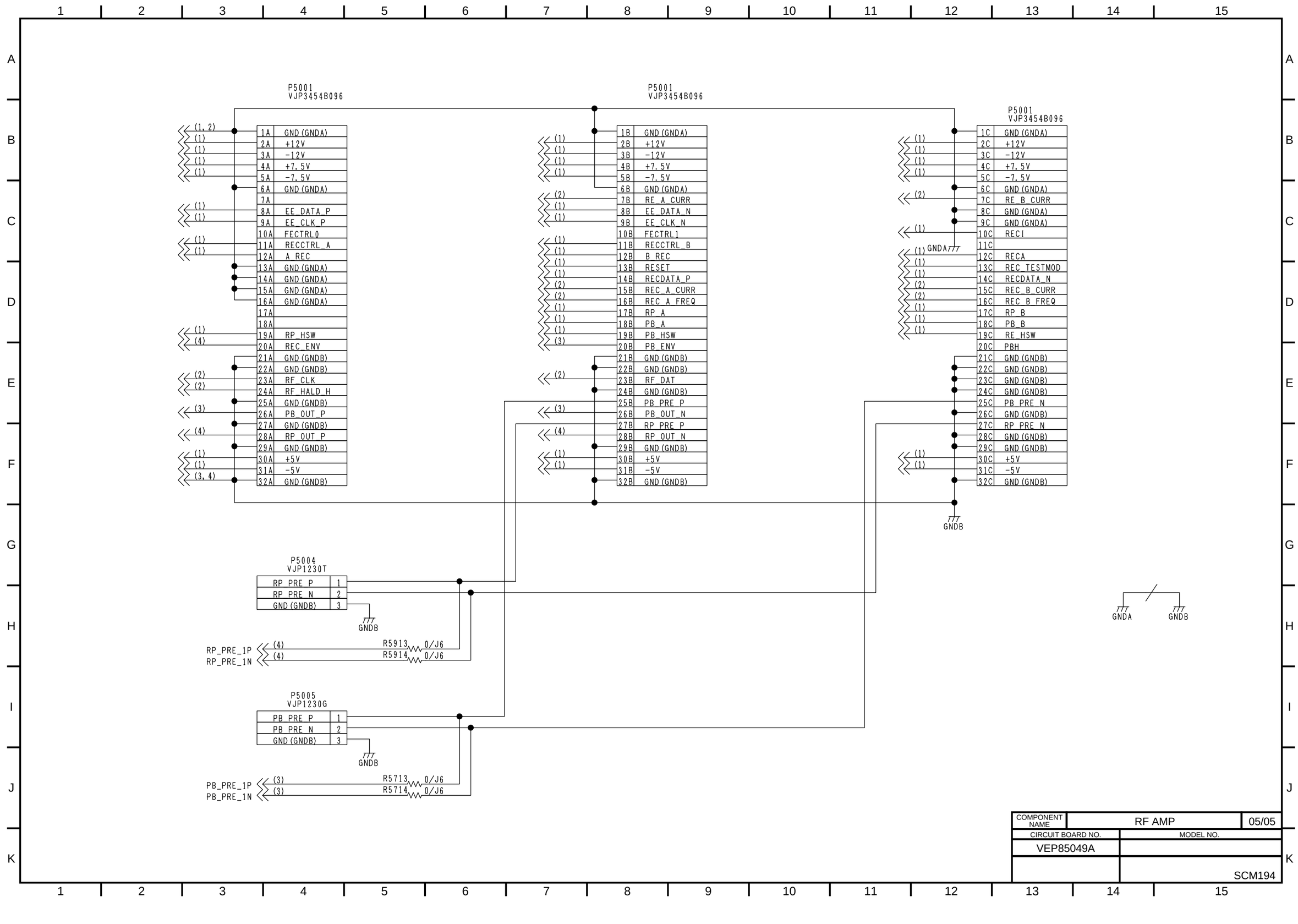
P5001
VJP3454B096
1A GND (GNDA)
2A +12V
3A −12V
4A +7.5V
5A −7.5V
6A GND (GNDA)
7A
8A EE_DATA_P
9A EE_CLK_P
10A FECTRLQ
11A RECCTRL_A
12A A_REC
13A GND (GNDA)
14A GND (GNDA)
15A GND (GNDA)
16A GND (GNDA)
17A
18A
19A RP_HSW
20A REC_ENV
21A GND (GNDB)
22A GND (GNDB)
23A RF_CLK
24A RF_HALD_H
25A GND (GNDB)
26A PB_OUT_P
27A GND (GNDB)
28A RP_OUT_P
29A GND (GNDB)
30A +5V
31A −5V
32A GND (GNDB)
P5001
VJP3454B096
1B GND (GNDA)
2B +12V
3B −12V
4B +7.5V
5B −7.5V
6B GND (GNDA)
7B RE_A_CURR
8B EE_DATA_N
9B EE_CLK_N
10B FECTRL1
11B RECCTRL_B
12B B_REC
13B RESET
14B RECDATA_P
15B REC_A_CURR
16B REC_A_FREQ
17B RP_A
18B PB_A
19B PB_HSW
20B PB_ENV
21B GND (GNDB)
22B GND (GNDB)
23B RF_DAT
24B GND (GNDB)
25B PB_PRE_P
26B PB_OUT_N
27B RP_PRE_P
28B RP_OUT_N
29B GND (GNDB)
30B +5V
31B −5V
32B GND (GNDB)
P5001
VJP3454B096
1C GND (GNDA)
2C +12V
3C −12V
4C +7.5V
5C −7.5V
6C GND (GNDA)
7C RE_B_CURR
8C GND (GNDA)
9C GND (GNDA)
10C RECI
11C
12C RECA
13C REC_TESTMOD
14C RECDATA_N
15C REC_B_CURR
16C REC_B_FREQ
17C RP_B
18C PB_B
19C RE_HSW
20C PBH
21C GND (GNDB)
22C GND (GNDB)
23C GND (GNDB)
24C GND (GNDB)
25C PB_PRE_N
26C GND (GNDB)
27C RP_PRE_N
28C GND (GNDB)
29C GND (GNDB)
30C +5V
31C −5V
32C GND (GNDB)
GNDA
GNDB
P5004
VJP1230T
RP_PRE_P 1
RP_PRE_N 2
GND (GNDB) 3
GNDB
RP_PRE_1P
RP_PRE_1N
R5913 0/J6
R5914 0/J6
P5005
VJP1230G
PB_PRE_P 1
PB_PRE_N 2
GND (GNDB) 3
GNDB
PB_PRE_1P
PB_PRE_1N
R5713 0/J6
R5714 0/J6
GNDA
GNDB
COMPONENT NAME
RF AMP
05/05
CIRCUIT BOARD NO.
MODEL NO.
VEP85049A
SCM194